City of Hattiesburg, MS

200 Forrest St.
P.O. Box 1898
Hattiesburg, MS 39401

Meeting Agenda

Tuesday, November 6, 2012

4:30 PM

Council Chambers

City Council

I. Call to Order

II. Call to Prayer and Pledge of Allegiance

III. Agenda Order

IV. Approval of Minutes

for the October 1, 2, 15, 16 and 23, 2012 City Council meetings.

V. PRESENTATION AGENDA

VI. POLICY AGENDA

VI.-1 2012-1309

Adopt an Ordinance Amending the Land Development Code to add and amend definitions For "Digital Billboards" specifically, Section 5.150.1 and Section 95.10 (3.1).

Attachments: Billboard letter.pdf
Digital Billboard redlined ord.pdf
digital billboard ord.pdf
executed ORD #3095 (digital billboard)
Oct mins.pdf

VI.-2 2012-1287

Adopt the November 6, 2012 Amendments to the Budget for the City of Hattiesburg for the fiscal year ending September 30, 2012 and adopt resolution authorizing publication of amendments for funds in excess of 10% of the original appropriation fund balance.

Attachments: November 2012 Proposed Amendments
executed RES 2012-124 November 2012 Proposed Amendments

VI.-3 2012-1317

Adopt a Resolution authorizing Requisition No. 10 from the Project Fund Construction Account in connection with that certain loan agreement, dated as of March 29, 2012, by and between the Mississippi Development Bank and the City of Hattiesburg.

Attachments: Bond Requisition No.10
executed RES 2012-125 Bond Requisition No.10

VI.-4 2012-1301

Authorize Mayor to execute renewal agreement with Hattiesburg Convention Commission for management of the East Sixth Street USO Club and Museum (Nunc Pro Tunc).

Attachments: USO Contract 2011

executed USO Contract 2011

VI.-5 2012-1283

Authorize Mayor to execute agreement between the Mississippi State Fire Academy (MSFA), the Hattiesburg Fire Department and Petal Fire Department to administer the NFPA 1041 Fire Instructor LEVEL I Course Curriculum.

Attachments: State Fire Academy Contract 20121

State Fire Academy Contract 20121

VI.-6 2012-1314

Rescind the Addendum to the Professional Services Contract between the City of Hattiesburg and Neel-Schaffer, Inc. approved October 2, 2012 at Minute Book number 2012-1/328; Approve Preliminary Engineering Services Contract with Neel-Schaffer, Inc. for the Safe Routes to School - Woodley Elementary project (Project No. SRSP-0210-00(024) LPA 106139-411000) subject to MDOT concurrence; Authorize Mayor to execute same.

Attachments: Consultant Contract No. 2

executed Consultant Contract No. 2

VI.-7 2012-1308

Authorize Mayor to execute quadruple originals of Supplemental Agreement No. 1 with Precision Construction, LLC. for the Pedestrian Connection Phases IV and VI project to extend the project limits South from Concart Street to Mamie Street as per the approved project plans in Additive Alternate #1 and Additive Alternate #2.

Attachments: Supplemental Agreement No. 1

executed Supplemental Agreement No. 1(4)

Supplemental Agreement No. 1-drw 1

Supplemental Agreement No. 1-drw 2

Supplemental Agreement No. 1-drw 3

VI.-8 2012-1298

Authorize Mayor to execute Supplemental Agreement to the Agreement for Professional Services between the City of Hattiesburg and Neel-Schaffer, Inc. for the Shared-Use Pathway from the Newman-Buschman Neighborhood to Chain Park dated February 21, 2012 adding specific language to the agreement to be in compliance with ARRA requirements.

Attachments: Neel-Schaffer Amendment ARRA Compliance

executed Neel-Schaffer Amendment ARRA Compliance

VI.-9 2012-1291

Approve Acquisition and Relocation Policy for the property to be obtained for the Broadway-Mobile Traffic Enhancement project (Project No. STP-0018-00-(029) LPA 106346-701000), and accept Letter of Representation engaging Jackson, Bowman, & Arrington, PLLC, to perform legal service required for acquisition of property, easements, and/or right of ways.

Attachments: Jackson Legal Contract

VI.-10 2012-1318

Approve Amendment No. 1 to the Memorandum of Agreement (MOA) between the City of Hattiesburg and USA Yeast, entered into on or about December 15, 2011, to amend the term of the agreement to June 1, 2015; authorize Mayor to execute same in triplicate.

Attachments: Amendment No 1 to Memorandum of Agreement (MOA) between City and USA

executed Amendment No 1 to Memorandum of Agreement (MOA) between City

VI.-11 2012-1319

Authorize Mayor to execute quadruple originals of Modification No. 1 to MDA Agreement number R-103-205-03-KED to extend the term of the agreement to June 30, 2015, incorporate Amendment No. 1 to the MOA with USA Yeast, and increase local match amount to $1,637,400.00.

Attachments: Amendment No 1 to MDA Grant Agreement

executed Amendment No 1 to MDA Grant Agreement (4)

VI.-12 2012-1307

Approve Change Order No. 1 for the Bobby L. Chain Airport Drainage and Safety Improvements project to adjust quantities to final, resulting in a contract reduction of $47,277.42; Authorize Mayor to execute same.

Attachments: As Built Change Order (3)

Executed change order

VI.-13 2012-1299

Authorize the Mayor to sign a Subordination Agreement on property owned by Renea Rogers and located at 131 East 5th St., allowing for the refinance of a mortgage on a property that is within the affordability period associated with a Down Payment Assistance award

Attachments: Subordination Agreement - Rogers

executed Subordination Agreement - Rogers

VI.-14 2012-1285

Approve and authorize Mayor to execute in triplicate a Contractor and Owner Agreement and a Housing Blue Roof Initiative Grant Award to Dorothy Miller of 541 North 19th Avenue in an amount not to exceed $10, 000 according to the Housing Rehabilitation and Housing Programs Manual Section VII (E). {Entitlement}

Attachments: COHCD Contractor & D. Miller Agreement 10.25.12

executed COHCD Contractor & D. Miller Agreement 10.25.12 (3)

Grant Agreement - Blue Roof Iniiative - D. Miller 10.25.12

executed Grant Agreement - Blue Roof Iniiative - D. Miller 10.25.12 (3)

VI.-15 2012-1286

Amend Blue Roof Initiative Grant Award Agreement found at MB 2012-1/68, from $5,000.00 to $10,000.00; Approve and Authorize Mayor to execute in triplicate a Blue Roof Initiative Grant Award to Shirley Powell of 124 Orchard Street in an amount not to exceed $10,000.00 for roof replacement/repair materials.

Attachments: Grant Agreement - Blue Roof Iniiative - S. Powell 10.25.12

Executed blue roof

VI.-16 2012-1306

Approve Commercial Rehabilitation Assistance Award to Domestic Abuse Family Shelter of 912 North Main Street, Becky Sims, Director, in an amount not to exceed $2,000 and authorize the Mayor to execute Subrecipient Agreement in connection with the same. {Entitlements}

Attachments: Commercial Rehab Agreement - Domestic Abuse Family Shelter

executed Commercial Rehab Agreement - Domestic Abuse Family Shelter

Exhibit A - Domestic Abuse Family Shelter

VI.-17 2012-1290

Approve and authorize the Mayor to submit the City of Hattiesburg's 2013-2017 Consolidated Plan and component 2013 Action Plan to the Department of Housing and Urban Development in connection with the implementation of the 2013-2017 CDBG and HOME Entitlement Programs.{Entitlements}

Attachments: Con Plan - Final - Text only

Maps - Median Income and Minority Concentration by Census Tract

ConsultationsandPublicCommentsFinal

Appendix A - Public Announcements

SF-424

VII. ROUTINE AGENDA

VII.-1 2012-1276

Acknowledge receipt of monthly budget report for the month ending October 31, 2012, on permanent file in the clerk's office.

Attachments: All Expenditures OCTOBER 2012

All Revenues OCTOBER 2012

VII.-2 2012-1292

Acknowledge Receipt of two-bid purchase docket for period of September 25, 2012 through October 29, 2012 as provided for in Section 31-7-13(B) of the Mississippi Code of 1972.

Attachments: 11-06-Two Quote Docket.pdf

VII.-3 2012-1304 Authorize Mayor to excute a one year contract 01/01/13 through 12/31/13 with IBM for City Hall AS400's hardware and software for $7888.40.

Attachments: ibm.pdf

VII.-4 2012-1294

Authorize Mayor to Renew Maintenance Contract between the City of Hattiesburg and Kone Inc. for maintenance on elevator equipment located in City Hall.

Attachments: 11-06-Kone Elevator Maintenance.pdf

VII.-5 2012-1275

Acknowledge receipt of Declaration of Forfeitures from the Forrest/Perry Metro Narcotics Task Force forfeiting $4,170.00 to the Hattiesburg Police Department. The monies will be forfeited in the following manner: $3,336.00 to be placed in the Hattiesburg Police Department's Forfeiture Fund and $834.00 to the Forrest County District Attorney's Office.

Attachments: Scan_Doc0017

VII.-6 2012-1263

Acknowledge receipt of permanent utility easement from Pointe Properties, LLC crossing a portion of Forrest County Tax Parcel No. 2-040B-29-004.02 to provide access to utilities for Southern Bone and Joint clinic.

Attachments: Southern Bone & Joint Easement

VII.-7 2012-1300

Acknowledge receipt of fully executed and recorded Judgment from the Forrest County Special Court of Eminent Domain for Civil Action No. C012-0328 related to the acquisition of a Right of Way and Permanent Drainage Easement for the County Tax Parcel No. 2-028I-08-239.00.

Attachments: Judgment C012-0328

VII.-8 2012-1295

Acknowledge Receipt of bid on October 18, 2012 for Term Bid Item #10 -Welding Supplies for the Hattiesburg Public Services Department for the period beginning November 7, 2012 and accept the bid from Nordan Smith as the only bid received.

Attachments: 11-06-Accept PS #10-Welding Supplies-Nordan Smith.pdf

VII.-9 2012-1293

Acknowledge Receipt of unadvertised bids for Fire Administration Office Roof Repair and accept the bid of Eddie Pearson Roofing in the amount of $9,613.62 as the lowest bid received (Unadvertised bids for Construction Project).

Attachments: 11-06-Accept Fire Admin Roof Repair (Two Quote).pdf

VII.-10 2012-1305

Acknowledge receipt of bids on September 27, 2012 for the Comprehensive Sewer and Water Investment Project - Sewer Phase III (COMSWIP Sewer Phase III) and accept bid from Jay Bearden Construction, Inc. in the amount of $1,632,964.92 as being the lowest and best bid; Authorize Mayor to execute contract for same.

Attachments: Bid Tab

VII.-11 2012-1296

Acknowledge receipt of bids on October 25, 2012 for the 4th Street Roadway Improvements Project Phase I (Project No. HPP-8750-00(003) LPA 104873-801000) and accept bid from Warren Paving, Inc. in the amount of $3,432,046.62 as being the lowest and best bid received, subject to the concurrence of the Mississippi Department of Transportation (MDOT); Authorize Mayor to execute contract for same.

Attachments: Award Letter Signed (3)

Certified Bid Tab (3)

VII.-12 2012-1302

Approve plans and specifications for the Water System Expansion on Veterans Memorial Boulevard; Authorize Advertisement for Bids for same.

Attachments: 1270_Advertisement for Bids

executed 1270_Advertisement for Bids

1270_Signed Specs

1270_Wtr_Plns_2012-10-24_Signed

VII.-13 2012-1297

Approve Specifications and Authorize Publication of Advertisement for Twelve (12) Month Lease on a Current Model 2012 Wheel Loader Backhoe

Attachments: 11-06-Advertise Backhoe Lease.pdf
executed 11-06-Advertise Backhoe Lease
12 Month Lease 2012 Wheel Loader Bid

VII.-14 2012-1313

Approve and authorize issuance of manual checks for CDBG Program Claims per attached memorandum.{Entitlement}

Attachments: MEMORANDUM-Manual Checks-CDBG
CDBG Supporting Docs

VII.-15 2012-1315

Approve and authorize issuance of manual checks for HOME Program Claims per attached memorandum.{Entitlement}

Attachments: MEMORANDUM-Manual Checks-HOME
HOME Supporting Docs

VII.-16 2012-1288

Approve claims docket for the period ending October 31, 2012.

Attachments: Claims docket10.31.12
ADDENDUM 11.5.12

City of Hattiesburg, MS

200 Forrest St.
P.O. Box 1898
Hattiesburg, MS 39401

Master

File Number: 2012-1309

File ID:	2012-1309	**Type:**	Ordinance	**Status:**	Passed
Version:	1	**Reference:**		**In Control:**	City Council
				File Created:	10/30/2012
Brief Title:	Digital Billboard Ordinance			**Final Action:**	11/06/2012
				Minute Book Number:	MB2012-1/380

Title:

Adopt an Ordinance Amending the Land Development Code to add and amend definitions For "Digital Billboards" specifically, Section 5.150.1 and Section 95.10 (3.1).

Notes:

Sponsors:		**Enactment Date:**	
Attachments:	Billboard letter.pdf, Digital Billboard redlined ord.pdf, digital billboard ord.pdf, executed ORD #3095 (digital billboard), Oct mins.pdf	**Enactment Number:**	
Contact:		**Meeting Date:**	
Drafter:	Tamika Paige	**Effective Date:**	

History of Legislative File

Version:	Acting Body:	Date:	Action:	Sent To:	Due Date:	Return Date:	Result:
1	City Council	11/06/2012	Adopt				Pass

Action Text: Adopt

Yea: 5 President Bradley
Council Member Delgado
Council Member Carroll
Vice President Ware
Council Member Naylor

ΓEL-No Vote: 0

Text of Legislative File 2012-1309

Title

Adopt an Ordinance Amending the Land Development Code to add and amend definitions For "Digital Billboards" specifically, Section 5.150.1 and Section 95.10 (3.1).

Summary

Digital Billboard Ordinance

Budget Information

Expenditure Type

Purchasing Item

Mayor
Johnny L. DuPree, Ph.D.

Council - Ward 1	Council - Ward 2	Council - Ward 3	Council - Ward 4	Council - Ward 5
Kim Bradley	*Deborah Denard Delgado*	*Carter Carroll*	*Dave J. Ware, II*	*Henry Naylor*

Memorandum

To: Mayor Johnny DuPree and City Council

From: Donovan Scruggs, AICP, Planning Manager

Date: October 30, 2012

At the October 2012 meeting, the Hattiesburg Planning Commission voted to recommend approval of amendments to the Digital Billboard Regulations. In short, the amendments enable developed sites to construct digital billboards. Currently, digital billboards are only permitted on undeveloped sites.

For your review, I have attached the ordinance with all changes indicated. In addition, I have provided the ordinance with all mark-ups removed for adoption.

If there are questions related to this proposed amendment, feel free to contact me at 601.545.4599

Prepared by: City of Hattiesburg
City Clerk's Office
P.O. Box 1898
Hattiesburg, MS 39403-1898
(601)545-4550

Return to: City of Hattiesburg
City Clerk's Office
P.O. Box 1898
Hattiesburg, MS 39403
(601)545-4550

INDEXING INSTRUCTIONS:

ORDINANCE NUMBER _____

OF THE

CITY OF HATTIESBURG, MISSISSIPPI

AN ORDINANCE CHANGING AND AMENDING THE LAND DEVELOPMENT CODE, ORDINANCE NUMBER 2330, AS AMENDED, SO AS TO ADD NEW DEFINITIONS FOR "DIGITAL BILLBOARDS" HEREAFTER KNOWN AS, SECTION 5.150.1, AND TO ADD SECTION 95.10 (3.1) FOR REGULATIONS ON "DIGITAL BILLBOARD" FOR THE CITY OF HATTIESBURG, MISSISSIPPI.

BE IT ORDAINED BY THE MAYOR AND COUNCIL OF THE CITY OF HATTIESBURG, MISSISSIPPI:

SECTION 1. That the Land Development Code, Ordinance Number 2330, as amended, of the City of Hattiesburg, Mississippi, Article 1, Section 5, Definitions, be and the same is hereby amended to add Section 5.150.1 Billboard, Digital, to hereinafter read as follows:

"5.150.1 **Billboard, Digital**

5.150.1 (1) **Billboard, Digital**: An off-premise sign capable of displaying static electronic images, graphic or pictures, with or without textual information that can be changed by remote or automatic means.

5.150.1 (2) **Billboard-Digital New Primary Structure**: New construction of a digital billboard as a primary structure on an undeveloped site ~~or as an accessory structure on a developed site. New Digital Billboards can only be located on currently undeveloped sites that have contained no other Billboards within the past 24 months~~.

5.150.1 (2a) **Billboard-Digital New Accessory Structure**: New construction of a digital billboard ~~as a primary structure on a undeveloped site or~~ as an accessory structure on a developed site. ~~New Digital Billboards can only be located on currently undeveloped sites that have contained no other Billboards within the past 24 months~~.

5.150.1 (3) **Billboard-Replacement**: Converting an existing static billboard to a digital billboard. This means changing static faces to digital faces only; or completely removing the existing static billboard (supports and faces) and constructing new supports and faces in the exact location of the "removed/replaced" static billboard.

5.150.1 (4) **Face**: The area of a billboard where the advertisement is displayed.

5.150.1 (5) **Face Frame**: The area directly behind the face on a billboard structure to which the face is attached.

5.150.1 (6) **Message**: See definition in Section 5.150 (9) of the Land Development Code.

5.150.1 (7) **Nit**: The unit of measurement most commonly used to measure *luminance* (brightness of a surface which is emitting light) is *candelas per square meter*, often referred to as *nits* in the U.S. (1 nit = 1 cd/m^2). The nocturnal appearance and environmental effect of objects such as internally lit signs may be analyzed both by total light output (lumens) and by their surface brightness (nits).

5.150.1 (8) **Support**: See definition in Section 5.150 (20) of the Land Development Code.

5.150.1 (9) **Undeveloped**: In its natural state, free of manmade structures including but not limited to buildings, parking lots and signs for the purposes of Section 95.10 (3.1) of the Land Development Code."

5.150.1 (10) **Developed**: A site that contains manmade structures including but not limited to buildings, parking lots and signs for the purposes of Section 95.10 (3.1) of the Land Development Code."

SECTION 2. That the Land Development Code, Ordinance Number 2330, as amended, of the City of Hattiesburg, Mississippi, Article 5, Section 95, Signs, be and the same is hereby changed and amended to add Section 95.10 (3.1) "Off-Premise Free Standing Signs/Digital Billboards," and to hereinafter read as follows:

"95.10 (3.1) Off-Premise Free Standing Signs/Digital Billboards:

95.10 (3.1) (1) **Purpose:** The purpose of this Section is to improve the quality of the urban landscape in accordance with the Comprehensive Plan 2008-2028. This Section will provide for an aesthetically pleasing streetscape, promote community design standards and promote transportation safety measures through the regulation of digital billboards. Digital billboards shall be regulated according to location, type, manner and time as outdoor displays as they relate to the Land Development Code of the City of Hattiesburg, Mississippi.

95.10 (3.1) (2) **General Provisions:** The use of digital technology is allowed for billboards, subject to the following limitations, restrictions and permits which are in addition to and intended to supplement all other applicable requirements. Digital billboards shall only be allowed along certain business corridors within the city, namely Regional and Community as defined below. Corridors are considered to be groups of commercial properties that are identified by the street or highway along which they are located. Corridors are also identified by transportation elements, land use, building mass, building form, pedestrian ways and streetscape. (See Corridor Designations in Section 95.10 (3.1) (4 A & B) of the Land Development Code.)

95.10 (3.1) (3) **Regulations:**

A. **Use Permit**: A Use Permit Upon Review approved by the City Council after review by the Hattiesburg Planning Commission and Site Plan Review Committee is required for all new Digital Billboards or replacement static billboards, including billboard supports and/or faces. (See definitions for Billboard-Digital New Primary Structure or Accessory Structure and Billboard-Replacement, in Section 5.150.1 (2, 2a, & 3) of the Land Development Code.)

B. **Digital Billboard-New**: Shall be limited to B-5, Regional Business District, I-1 and I-2 Industrial Districts located within the Regional and Community Business Corridors as defined in

Section 95.10 (3.1) (4 A & B). (See definitions for Billboard- Digital New in Section 5.150.1 (2) of the Land Development Code.)

C. **Primary Structure:** A new digital billboard will be considered as a primary structure and will require a legal description of the property whether leased or purchased, and no other uses shall co-exist on the same property as the primary structure. The site is to be grassed and landscaped as approved by the Site Plan Review Committee; also, new structures shall be designed to complement the surrounding businesses and/or residential properties.

C.1 **Accessory Structure:** A new digital billboard will be considered as an accessory structure when constructed on a site that is occupied with a primary structure(s) which may include parking areas, buildings, and similar uses except for other off-premise or on-premise free standing signs.

The area immediately adjacent to the billboard shall be landscaped as approved by the Site Plan Review Committee. This landscaped area shall extend ten (10) feet from the face(s) of the billboard. If a billboard has only one face (single sided), the landscaped area shall extend ten (10) feet from the rear or back of the sign. This landscaped area should extend ten (10) from the outer most edges (street edge and opposite edge) of the sign. The intent of this regulation is to provide a landscaped area around the entire perimeter of the proposed digital billboard. Flexibility for this buffer area may be provided and permitted by the site plan review committee if the total required area is not reduced and landscaped area extends beyond the perimeter of the sign to the greatest extent possible.

No parking shall be allowed in the required landscaped area. If the landscaped area is adjacent to a parking area, concrete curbing shall be provided along all edges of the perimeter that abut parking areas or lanes.

Variances shall not be allowed for a reduction in parking spaces for the placement of a new digital billboard as an accessory structure.

D. **Replacing a Static Billboard with a Digital Billboard:**

Billboard replacement, of all or any part thereof, shall require the removal of two additional static billboard structures. A building permit for the removal of three (3) static billboards and installation of one digital billboard (location of sites as approved under the Use Permit Upon Review) for the conversion of an existing static billboard structure to a digital billboard structure. Confirmation of the removal of the required number of existing static billboard structures shall be on file with the Land Development Code Administrator prior to the issuance of a permit to convert an existing static billboard structure to a digital billboard structure.

a. After an existing billboard structure, digital or static, has been removed as a condition of Section 95.10 (3.1) (3D) of the Land Development Code, no other billboard structure, digital or static, shall be placed on that parcel for a minimum of 24 months.

b. The applicant shall provide an inventory of their outdoor advertising sign locations within the city. A company that converts an existing static billboard to a digital billboard must provide, with each permit application, a complete current inventory of its billboards located within the corporate limits of the city of Hattiesburg. The inventory shall include per structure: location (longitude/latitude), size, number of faces and type of illumination.

c. No person shall convert an existing static billboard structure to a digital billboard structure, without first obtaining a sign permit as required by this section.

d. Digital billboards shall be the same size or smaller than the static billboard being replaced, but shall not exceed the dimensions as outlined in Section 95.10 (3.1) (3 E & F) of the Land Development Code, whichever is smaller.

e. A digital billboard replacing a non-conforming static billboard may be exempt from the Land Development Code, Section 95.15, if approved by the City Council, after review by the Hattiesburg Planning Commission and Site Plan Review Committee.

E. **Area and Setback Regulations Chart: Billboard-Digital New**

Billboard-Digital New		
Area and Setback Regulations	**Regional Business Corridors**	**Community Business Corridors**
1. Use Permit Required	Yes	Yes
2. ~~Primary Structure~~	~~Yes~~	~~Yes~~
3. Spacing between Digital Billboards (Primary Structures)	Minimum radius of 1000 feet	Minimum radius of 2,500 feet
4. Spacing between Digital Billboards (Accessory Structures)	Minimum radius of 1,250 feet	Not permitted
5. Spacing between Digital Billboards (Primary Structures) and Static Billboards	Minimum radius of 1,000 feet	Minimum radius of 1,250 feet
6. Spacing between Digital Billboards (Accessory Structures) and Static Billboards	Minimum radius of 1,250	Not permitted
7. Distance from residentially zoned districts	Minimum 100 linear feet (Measured from leading edge of billboard)	Minimum 250 linear feet (Measured from leading edge of billboard)
8. Face Area	Maximum 400 square feet	Maximum 230 square feet
9. Face Width	Maximum 40 feet	Maximum 23 feet
10. Face Height	Maximum 10 feet	Maximum 10 feet
11. Structure Height	Maximum 35 feet	Maximum 21 feet
12. Clearance above ground	Minimum 10 feet	Minimum 10 feet
13. Front Setback	Minimum 25 feet (Measured from leading edge of billboard)	Minimum 25 feet (Measured from leading edge of billboard)
14. Side Setback	Minimum 15/15 feet (Measured from leading edge of billboard)	Minimum 15/15 feet (Measured from leading edge of billboard)
15. Rear Setback	Minimum 25 feet (Measured from leading edge of billboard)	Minimum 25 feet (Measured from leading edge of billboard)
16. Static display time for each message	Minimum eight (8) seconds.	Minimum eight (8) seconds.
17. Off time for each message change	Maximum two (2) seconds	Maximum two (2) seconds

F. **Area and Setback Regulations Chart: Billboard-Replacement**

Billboard-Replacement		
Area and Setback Regulations	**Regional Business Corridors**	**Community Business Corridors**
1. Use Permit Required	Yes	Yes
2. Primary Structure	Does not apply.	Does not apply.
3. Spacing between Digital Billboards	Minimum 1,000 linear feet measured radially	Minimum 2,500 linear feet measured radially
4. Spacing between Digital Billboards and Static Billboards	Minimum 1,000 linear feet measured radially	Minimum 1,250 linear feet measured radially
5. Distance from residentially zoned districts	Does not apply.	Does not apply.
6. Face Area	Maximum 400 square feet	Maximum 230 square feet
7. Face Width	Maximum 40 feet	Maximum 23 feet
8. Face Height	Maximum 10 feet	Maximum 10 feet
9. Structure Height	Maximum 35 feet	See Section 95.10 (3.1) (3Dd)
10. Clearance above ground	Minimum 10 feet	Minimum 10 feet
11. Front Setback	Does not apply.	Does not apply.
12. Side Setback	Does not apply.	Does not apply.
13. Rear Setback	Does not apply.	Does not apply.
14. Static display time for each message	Minimum eight (8) seconds.	Minimum eight (8) seconds.
15. Off time for each message change	Maximum two (2) seconds	Maximum two (2) seconds

G. **Movement:** The image will change instantaneously as seen by the human eye, and shall not use blinking, fading, rolling, shading, dissolving, or similar effects as part of the change.

H. **Light levels:** All digital billboards shall be equipped with light sensing devices or a scheduled dimming timer that will automatically dim the intensity of the light emitted by the sign during ambient low-light conditions and at night so that the sign does not exceed the maximum brightness levels allowed in this section.

a. Maximum brightness shall not exceed five thousand (5,000) nits when measured from the sign's face at its maximum brightness during daylight hours and shall not exceed five hundred (500) nits when measured from the sign's face at its maximum brightness at night.

b. If such sign is located within one hundred (100) feet of a property with residential zoning, the sign must be oriented such that no portion of the electronic sign face is visible from a residentially-zoned property or the brightness is reduced to no more than two hundred fifty (250) nits at night.

c. Prior to the issuance of a permit for such sign, the applicant shall provide written certification from the sign manufacturer that the light intensity has been factory preset not to exceed the levels specified above.

I. **Malfunctions:** Any malfunction shall be repaired or disconnected within 48 hours by the owner or operator of such billboard.

J. **Prohibited Locations:** Digital billboard signs are prohibited in any designated local historic districts, or along Veteran's Memorial Blvd. and Classic Drive.

95.10 (3.1) (4) Corridor Designations:

A. **Regional Business Corridors**
The Regional Business District is primarily a non-residential district located along major arterial streets and highways. The land uses in this district may generate a higher volume of regional traffic and/or require frequent access by large trucks and commercial vehicles. The characteristics of this district include the following: suburban-style commercial centers and big-box buildings; high-density residential developments such as apartment complexes; large, private parking areas; and light industrial campuses and employment centers.

a. U.S. Highway 49: From Northern city limit southward to intersection with Old Highway 42;

b. U.S. Highway 49: From intersection at Edwards Street and Elk's Lake Road south to southern city limit.

~~c. Old Highway 42: From intersection at U.S. Highway 49 to Main Street.~~

d. U.S. Highway 98: From Western city limit eastward to intersection with Interstate 59;

e. U.S. Highway 98: From Eastern city limit westward to intersection with Interstate 59;

f. Interstate 59

B. **Community Business Corridors**

The Community Business District is primarily a non-residential corridor surrounded by single and multi-family residential districts located along the city's interior roadways. In this district, certain residential and non- residential land uses may be found that exhibit suburban development patterns, as well as development patterns that complement the residential, pedestrian-oriented character of surrounding neighborhoods.

The characteristics of this district include less-intensive commercial uses than are found in the Regional Business District.

a. U.S. Highway 49: From intersection at Old Highway 42 southward to intersection with Edwards Street.

b. Old Highway 42: From intersection at Main Street eastward to city limit.

c. Broadway Drive: From intersection at West Pine Street southwesterly to intersection with U.S. Highway 49.

d. Hardy Street: From intersection at Interstate 59 eastward to intersection with U.S. Highway 49.

e. Bouie Street: From intersection at Old Highway 42 south to intersection with East 4th Street.

f. James Street (north): From the intersection at Edwards Street south to intersection with J. M. Tatum Industrial Drive.

g. WSF Tatum Boulevard: From U.S. Highway 11 to U.S. Highway 49.

h. Old Highway 42: From intersection at U.S. Highway 49 to Main Street.

95.10 (3.1) (5) Most Restrictive Law:

If any provision of this ordinance is in conflict with any other legally adopted regulation, the most restrictive requirement shall govern."

SECTION 3. Except as hereby expressly changed and amended, the aforesaid Land Development Code, Ordinance Number 2330, adopted December 5, 1989, as amended, of said City of Hattiesburg, Mississippi, shall be and remain in full force and form as adopted.

SECTION 4. That this Ordinance take effect and be in force thirty (30) days from and after passage as provided by law.

The foregoing Ordinance having been reduced to writing, the same was introduced by Councilmember _____, seconded by Councilmember _____, and was adopted by the following vote to-wit:

YEAS: NAYS:

THE President thereby declared the motion carried and the foregoing Ordinance adopted and approved, this the _____ day of _____ A.D., 2012.

(S E A L)

ATTEST: ADOPTED:

_____ _____

CLERK OF COUNCIL PRESIDENT

THE above foregoing Ordinance having been submitted to and approved by the Mayor, this the _____ day of _____ A.D., 2012.

ATTEST: APPROVED:

_____ _____

CITY CLERK MAYOR

Prepared by: City of Hattiesburg
City Clerk's Office
P.O. Box 1898
Hattiesburg, MS 39403-1898
(601)545-4550

Return to: City of Hattiesburg
City Clerk's Office
P.O. Box 1898
Hattiesburg, MS 39403
(601)545-4550

INDEXING INSTRUCTIONS:

ORDINANCE NUMBER _____

OF THE

CITY OF HATTIESBURG, MISSISSIPPI

AN ORDINANCE CHANGING AND AMENDING THE LAND DEVELOPMENT CODE, ORDINANCE NUMBER 2330, AS AMENDED, SO AS TO ADD NEW DEFINITIONS FOR "DIGITAL BILLBOARDS" HEREAFTER KNOWN AS, SECTION 5.150.1, AND TO ADD SECTION 95.10 (3.1) FOR REGULATIONS ON "DIGITAL BILLBOARD" FOR THE CITY OF HATTIESBURG, MISSISSIPPI.

BE IT ORDAINED BY THE MAYOR AND COUNCIL OF THE CITY OF HATTIESBURG, MISSISSIPPI:

SECTION 1. That the Land Development Code, Ordinance Number 2330, as amended, of the City of Hattiesburg, Mississippi, Article 1, Section 5, Definitions, be and the same is hereby amended to add Section 5.150.1 Billboard, Digital, to hereinafter read as follows:

"5.150.1 **Billboard, Digital**

5.150.1 (1) **Billboard, Digital**: An off-premise sign capable of displaying static electronic images, graphic or pictures, with or without textual information that can be changed by remote or automatic means.

5.150.1 (2) **Billboard-Digital New Primary Structure**: New construction of a digital billboard as a primary structure on an undeveloped site

5.150.1 (2a) **Billboard-Digital New Accessory Structure**: New construction of a digital billboard as an accessory structure on a developed site.

5.150.1 (3) **Billboard-Replacement**: Converting an existing static billboard to a digital billboard. This means changing static faces to digital faces only; or completely removing the existing static billboard (supports and faces) and constructing new supports and faces in the exact location of the "removed/replaced" static billboard.

5.150.1 (4) **Face**: The area of a billboard where the advertisement is displayed.

5.150.1 (5) **Face Frame**: The area directly behind the face on a billboard structure to which the face is attached.

5.150.1 (6) **Message**: See definition in Section 5.150 (9) of the Land Development Code.

5.150.1 (7) **Nit**: The unit of measurement most commonly used to measure *luminance* (brightness of a surface which is emitting light) is *candelas per square meter*, often referred to as *nits* in the U.S. (1 nit = 1 cd/m^2). The nocturnal appearance and environmental effect of objects such as internally lit signs may be analyzed both by total light output (lumens) and by their surface brightness (nits).

5.150.1 (8) **Support**: See definition in Section 5.150 (20) of the Land Development Code.

5.150.1 (9) **Undeveloped**: In its natural state, free of manmade structures including but not limited to buildings, parking lots and signs for the purposes of Section 95.10 (3.1) of the Land Development Code."

5.150.1 (10) **Developed**: A site that contains manmade structures including but not limited to buildings, parking lots and signs for the purposes of Section 95.10 (3.1) of the Land Development Code."

SECTION 2. That the Land Development Code, Ordinance Number 2330, as amended, of the City of Hattiesburg, Mississippi, Article 5, Section 95, Signs, be and the same is hereby changed and amended to add Section 95.10 (3.1) "Off-Premise Free Standing Signs/Digital Billboards," and to hereinafter read as follows:

"95.10 (3.1) Off-Premise Free Standing Signs/Digital Billboards:

95.10 (3.1) (1) **Purpose:** The purpose of this Section is to improve the quality of the urban landscape in accordance with the Comprehensive Plan 2008-2028. This Section will provide for an aesthetically pleasing streetscape, promote community design standards and promote transportation safety measures through the regulation of digital billboards. Digital billboards shall be regulated according to location, type, manner and time as outdoor displays as they relate to the Land Development Code of the City of Hattiesburg, Mississippi.

95.10 (3.1) (2) **General Provisions:** The use of digital technology is allowed for billboards, subject to the following limitations, restrictions and permits which are in addition to and intended to supplement all other applicable requirements. Digital billboards shall only be allowed along certain business corridors within the city, namely Regional and Community as defined below. Corridors are considered to be groups of commercial properties that are identified by the street or highway along which they are located. Corridors are also identified by transportation elements, land use, building mass, building form, pedestrian ways and streetscape. (See Corridor Designations in Section 95.10 (3.1) (4 A & B) of the Land Development Code.)

95.10 (3.1) (3) **Regulations:**

A. **Use Permit**: A Use Permit Upon Review approved by the City Council after review by the Hattiesburg Planning Commission and Site Plan Review Committee is required for all new Digital Billboards or replacement static billboards, including billboard supports and/or faces. (See definitions for Billboard-Digital New Primary Structure or Accessory Structure and Billboard-Replacement, in Section 5.150.1 (2, 2a, & 3) of the Land Development Code.)

B. **Digital Billboard-New**: Shall be limited to B-5, Regional Business District, I-1 and I-2 Industrial Districts located within the Regional and Community Business Corridors as defined in Section 95.10 (3.1) (4 A & B). (See definitions for Billboard- Digital New in Section 5.150.1 (2) of the Land Development Code.)

C. **Primary Structure:** A new digital billboard will be considered as a primary structure and will require a legal description of the property whether leased or purchased, and no other uses shall co-exist on the same property as the primary structure. The site is to be grassed and landscaped

as approved by the Site Plan Review Committee; also, new structures shall be designed to complement the surrounding businesses and/or residential properties.

C.1 **Accessory Structure:** A new digital billboard will be considered as an accessory structure when constructed on a site that is occupied with a primary structure(s) which may include parking areas, buildings, and similar uses except for other off-premise or on-premise free standing signs.

The area immediately adjacent to the billboard shall be landscaped as approved by the Site Plan Review Committee. This landscaped area shall extend ten (10) feet from the face(s) of the billboard. If a billboard has only one face (single sided), the landscaped area shall extend ten (10) feet from the rear or back of the sign. This landscaped area should extend ten (10) from the outer most edges (street edge and opposite edge) of the sign. The intent of this regulation is to provide a landscaped area around the entire perimeter of the proposed digital billboard. Flexibility for this buffer area may be provided and permitted by the site plan review committee if the total required area is not reduced and landscaped area extends beyond the perimeter of the sign to the greatest extent possible.

No parking shall be allowed in the required landscaped area. If the landscaped area is adjacent to a parking area, concrete curbing shall be provided along all edges of the perimeter that abut parking areas or lanes.

Variances shall not be allowed for a reduction in parking spaces for the placement of a new digital billboard as an accessory structure.

D. **Replacing a Static Billboard with a Digital Billboard:**

Billboard replacement, of all or any part thereof, shall require the removal of two additional static billboard structures. A building permit for the removal of three (3) static billboards and installation of one digital billboard (location of sites as approved under the Use Permit Upon Review) for the conversion of an existing static billboard structure to a digital billboard structure. Confirmation of the removal of the required number of existing static billboard structures shall be on file with the Land Development Code Administrator prior to the issuance of a permit to convert an existing static billboard structure to a digital billboard structure.

a. After an existing billboard structure, digital or static, has been removed as a condition of Section 95.10 (3.1) (3D) of the Land Development Code, no other billboard structure, digital or static, shall be placed on that parcel for a minimum of 24 months.

b. The applicant shall provide an inventory of their outdoor advertising sign locations within the city. A company that converts an existing static billboard to a digital billboard must provide, with each permit application, a complete current inventory of its billboards located within the corporate limits of the city of Hattiesburg. The inventory shall include per structure: location (longitude/latitude), size, number of faces and type of illumination.

c. No person shall convert an existing static billboard structure to a digital billboard structure, without first obtaining a sign permit as required by this section.

d. Digital billboards shall be the same size or smaller than the static billboard being replaced, but shall not exceed the dimensions as outlined in Section 95.10 (3.1) (3 E & F) of the Land Development Code, whichever is smaller.

e. A digital billboard replacing a non-conforming static billboard may be exempt from the Land Development Code, Section 95.15, if approved by the City Council, after review by the Hattiesburg Planning Commission and Site Plan Review Committee.

E. **Area and Setback Regulations Chart: Billboard-Digital New**

Billboard-Digital New		
Area and Setback Regulations	**Regional Business Corridors**	**Community Business Corridors**
1. Use Permit Required	Yes	Yes
2. Spacing between Digital Billboards (Primary Structures)	Minimum radius of 1000 feet	Minimum radius of 2,500 feet
3. Spacing between Digital Billboards (Accessory Structures)	Minimum radius of 1,250 feet	Not permitted
4. Spacing between Digital Billboards (Primary Structures) and Static Billboards	Minimum radius of 1,000 feet	Minimum radius of 1,250 feet
5. Spacing between Digital Billboards (Accessory Structures) and Static Billboards	Minimum radius of 1,250	Not permitted
6. Distance from residentially zoned districts	Minimum 100 linear feet (Measured from leading edge of billboard)	Minimum 250 linear feet (Measured from leading edge of billboard)
7. Face Area	Maximum 400 square feet	Maximum 230 square feet
8. Face Width	Maximum 40 feet	Maximum 23 feet
9. Face Height	Maximum 10 feet	Maximum 10 feet
10. Structure Height	Maximum 35 feet	Maximum 21 feet
11. Clearance above ground	Minimum 10 feet	Minimum 10 feet
12. Front Setback	Minimum 25 feet (Measured from leading edge of billboard)	Minimum 25 feet (Measured from leading edge of billboard)
13. Side Setback	Minimum 15/15 feet (Measured from leading edge of billboard)	Minimum 15/15 feet (Measured from leading edge of billboard)
14. Rear Setback	Minimum 25 feet (Measured from leading edge of billboard)	Minimum 25 feet (Measured from leading edge of billboard)
15. Static display time for each message	Minimum eight (8) seconds.	Minimum eight (8) seconds.
16. Off time for each message change	Maximum two (2) seconds	Maximum two (2) seconds

F. **Area and Setback Regulations Chart: Billboard-Replacement**

Billboard-Replacement		
Area and Setback Regulations	**Regional Business Corridors**	**Community Business Corridors**
1. Use Permit Required	Yes	Yes
2. Primary Structure	Does not apply.	Does not apply.
3. Spacing between Digital Billboards	Minimum 1,000 linear feet measured radially	Minimum 2,500 linear feet measured radially
4. Spacing between Digital Billboards and Static Billboards	Minimum 1,000 linear feet measured radially	Minimum 1,250 linear feet measured radially
5. Distance from residentially zoned districts	Does not apply.	Does not apply.
6. Face Area	Maximum 400 square feet	Maximum 230 square feet
7. Face Width	Maximum 40 feet	Maximum 23 feet
8. Face Height	Maximum 10 feet	Maximum 10 feet
9. Structure Height	Maximum 35 feet	See Section 95.10 (3.1) (3Dd)
10. Clearance above ground	Minimum 10 feet	Minimum 10 feet
11. Front Setback	Does not apply.	Does not apply.
12. Side Setback	Does not apply.	Does not apply.
13. Rear Setback	Does not apply.	Does not apply.
14. Static display time for each message	Minimum eight (8) seconds.	Minimum eight (8) seconds.
15. Off time for each message change	Maximum two (2) seconds	Maximum two (2) seconds

G. **Movement:** The image will change instantaneously as seen by the human eye, and shall not use blinking, fading, rolling, shading, dissolving, or similar effects as part of the change.

H. **Light levels:** All digital billboards shall be equipped with light sensing devices or a scheduled dimming timer that will automatically dim the intensity of the light emitted by the sign during ambient low-light conditions and at night so that the sign does not exceed the maximum brightness levels allowed in this section.

a. Maximum brightness shall not exceed five thousand (5,000) nits when measured from the sign's face at its maximum brightness during daylight hours and shall not exceed five hundred (500) nits when measured from the sign's face at its maximum brightness at night.

b. If such sign is located within one hundred (100) feet of a property with residential zoning, the sign must be oriented such that no portion of the electronic sign face is visible from a residentially-zoned property or the brightness is reduced to no more than two hundred fifty (250) nits at night.

c. Prior to the issuance of a permit for such sign, the applicant shall provide written certification from the sign manufacturer that the light intensity has been factory preset not to exceed the levels specified above.

I. **Malfunctions:** Any malfunction shall be repaired or disconnected within 48 hours by the owner or operator of such billboard.

J. **Prohibited Locations:** Digital billboard signs are prohibited in any designated local historic districts, or along Veteran's Memorial Blvd. and Classic Drive.

95.10 (3.1) (4) Corridor Designations:

A. **Regional Business Corridors**
The Regional Business District is primarily a non-residential district located along major arterial streets and highways. The land uses in this district may generate a higher volume of regional traffic and/or require frequent access by large trucks and commercial vehicles. The characteristics of this district include the following: suburban-style commercial centers and big-box buildings; high-density residential developments such as apartment complexes; large, private parking areas; and light industrial campuses and employment centers.

a. U.S. Highway 49: From Northern city limit southward to intersection with Old Highway 42;

b. U.S. Highway 49: From intersection at Edwards Street and Elk's Lake Road south to southern city limit.

c. Removed

d. U.S. Highway 98: From Western city limit eastward to intersection with Interstate 59;

e. U.S. Highway 98: From Eastern city limit westward to intersection with Interstate 59;

f. Interstate 59

B. **Community Business Corridors**

The Community Business District is primarily a non-residential corridor surrounded by single and multi-family residential districts located along the city's interior roadways. In this district, certain residential and non- residential land uses may be found that exhibit suburban development patterns, as well as development patterns that complement the residential, pedestrian-oriented character of surrounding neighborhoods.

The characteristics of this district include less-intensive commercial uses than are found in the Regional Business District.

a. U.S. Highway 49: From intersection at Old Highway 42 southward to intersection with Edwards Street.

b. Old Highway 42: From intersection at Main Street eastward to city limit.

c. Broadway Drive: From intersection at West Pine Street southwesterly to intersection with U.S. Highway 49.

d. Hardy Street: From intersection at Interstate 59 eastward to intersection with U.S. Highway 49.

e. Bouie Street: From intersection at Old Highway 42 south to intersection with East 4th Street.

f. James Street (north): From the intersection at Edwards Street south to intersection with J. M. Tatum Industrial Drive.

g. WSF Tatum Boulevard: From U.S. Highway 11 to U.S. Highway 49.

h. Old Highway 42: From intersection at U.S. Highway 49 to Main Street.

95.10 (3.1) (5) Most Restrictive Law:

If any provision of this ordinance is in conflict with any other legally adopted regulation, the most restrictive requirement shall govern."

SECTION 3. Except as hereby expressly changed and amended, the aforesaid Land Development Code, Ordinance Number 2330, adopted December 5, 1989, as amended, of said City of Hattiesburg, Mississippi, shall be and remain in full force and form as adopted.

SECTION 4. That this Ordinance take effect and be in force thirty (30) days from and after passage as provided by law.

The foregoing Ordinance having been reduced to writing, the same was introduced by Councilmember _____, seconded by Councilmember _____, and was adopted by the following vote to-wit:

YEAS: NAYS:

THE President thereby declared the motion carried and the foregoing Ordinance adopted and approved, this the _____day of _____ A.D., 2012.

(S E A L)

ATTEST: ADOPTED:

_____ _____

CLERK OF COUNCIL PRESIDENT

THE above foregoing Ordinance having been submitted to and approved by the Mayor, this the _____day of _____ A.D., 2012.

ATTEST: APPROVED:

_____ _____

CITY CLERK MAYOR

Prepared by: City of Hattiesburg
City Clerk's Office
P.O. Box 1898
Hattiesburg, MS 39403-1898
(601)545-4550

Return to: City of Hattiesburg
City Clerk's Office
P.O. Box 1898
Hattiesburg, MS 39403
(601)545-4550

INDEXING INSTRUCTIONS:

ORDINANCE NUMBER 3095

OF THE

CITY OF HATTIESBURG, MISSISSIPPI

AN ORDINANCE CHANGING AND AMENDING THE LAND DEVELOPMENT CODE, ORDINANCE NUMBER 2330, AS AMENDED, SO AS TO ADD NEW DEFINITIONS FOR "DIGITAL BILLBOARDS" HEREAFTER KNOWN AS, SECTION 5.150.1, AND TO ADD SECTION 95.10 (3.1) FOR REGULATIONS ON "DIGITAL BILLBOARD" FOR THE CITY OF HATTIESBURG, MISSISSIPPI.

BE IT ORDAINED BY THE MAYOR AND COUNCIL OF THE CITY OF HATTIESBURG, MISSISSIPPI:

SECTION 1. That the Land Development Code, Ordinance Number 2330, as amended, of the City of Hattiesburg, Mississippi, Article 1, Section 5, Definitions, be and the same is hereby amended to add Section 5.150.1 Billboard, Digital, to hereinafter read as follows:

"5.150.1 **Billboard, Digital**

5.150.1 (1) **Billboard, Digital**: An off-premise sign capable of displaying static electronic images, graphic or pictures, with or without textual information that can be changed by remote or automatic means.

5.150.1 (2) **Billboard-Digital New Primary Structure**: New construction of a digital billboard as a primary structure on an undeveloped site

5.150.1 (2a) **Billboard-Digital New Accessory Structure**: New construction of a digital billboard as an accessory structure on a developed site.

5.150.1 (3) **Billboard-Replacement**: Converting an existing static billboard to a digital billboard. This means changing static faces to digital faces only; or completely removing the existing static billboard (supports and faces) and constructing new supports and faces in the exact location of the "removed/replaced" static billboard.

5.150.1 (4) **Face**: The area of a billboard where the advertisement is displayed.

5.150.1 (5) **Face Frame**: The area directly behind the face on a billboard structure to which the face is attached.

5.150.1 (6) **Message**: See definition in Section 5.150 (9) of the Land Development Code.

5.150.1 (7) **Nit**: The unit of measurement most commonly used to measure *luminance* (brightness of a surface which is emitting light) is *candelas per square meter*, often referred to as *nits* in the U.S. (1 nit = 1 cd/m^2). The nocturnal appearance and environmental effect of objects such as internally lit signs may be analyzed both by total light output (lumens) and by their surface brightness (nits).

5.150.1 (8) **Support**: See definition in Section 5.150 (20) of the Land Development Code.

5.150.1 (9) **Undeveloped**: In its natural state, free of manmade structures including but not limited to buildings, parking lots and signs for the purposes of Section 95.10 (3.1) of the Land Development Code."

5.150.1 (10) **Developed**: A site that contains manmade structures including but not limited to buildings, parking lots and signs for the purposes of Section 95.10 (3.1) of the Land Development Code."

SECTION 2. That the Land Development Code, Ordinance Number 2330, as amended, of the City of Hattiesburg, Mississippi, Article 5, Section 95, Signs, be and the same is hereby changed and amended to add Section 95.10 (3.1) "Off-Premise Free Standing Signs/Digital Billboards," and to hereinafter read as follows:

"95.10 (3.1) Off-Premise Free Standing Signs/Digital Billboards:

95.10 (3.1) (1) **Purpose:** The purpose of this Section is to improve the quality of the urban landscape in accordance with the Comprehensive Plan 2008-2028. This Section will provide for an aesthetically pleasing streetscape, promote community design standards and promote transportation safety measures through the regulation of digital billboards. Digital billboards shall be regulated according to location, type, manner and time as outdoor displays as they relate to the Land Development Code of the City of Hattiesburg, Mississippi.

95.10 (3.1) (2) **General Provisions:** The use of digital technology is allowed for billboards, subject to the following limitations, restrictions and permits which are in addition to and intended to supplement all other applicable requirements. Digital billboards shall only be allowed along certain business corridors within the city, namely Regional and Community as defined below. Corridors are considered to be groups of commercial properties that are identified by the street or highway along which they are located. Corridors are also identified by transportation elements, land use, building mass, building form, pedestrian ways and streetscape. (See Corridor Designations in Section 95.10 (3.1) (4 A & B) of the Land Development Code.)

95.10 (3.1) (3) **Regulations:**

A. **Use Permit**: A Use Permit Upon Review approved by the City Council after review by the Hattiesburg Planning Commission and Site Plan Review Committee is required for all new Digital Billboards or replacement static billboards, including billboard supports and/or faces. (See definitions for Billboard-Digital New Primary Structure or Accessory Structure and Billboard-Replacement, in Section 5.150.1 (2, 2a, & 3) of the Land Development Code.)

B. **Digital Billboard-New**: Shall be limited to B-5, Regional Business District, I-1 and I-2 Industrial Districts located within the Regional and Community Business Corridors as defined in Section 95.10 (3.1) (4 A & B). (See definitions for Billboard- Digital New in Section 5.150.1 (2) of the Land Development Code.)

C. **Primary Structure:** A new digital billboard will be considered as a primary structure and will require a legal description of the property whether leased or purchased, and no other uses shall co-exist on the same property as the primary structure. The site is to be grassed and landscaped

as approved by the Site Plan Review Committee; also, new structures shall be designed to complement the surrounding businesses and/or residential properties.

C.1 **Accessory Structure:** A new digital billboard will be considered as an accessory structure when constructed on a site that is occupied with a primary structure(s) which may include parking areas, buildings, and similar uses except for other off-premise or on-premise free standing signs.

The area immediately adjacent to the billboard shall be landscaped as approved by the Site Plan Review Committee. This landscaped area shall extend ten (10) feet from the face(s) of the billboard. If a billboard has only one face (single sided), the landscaped area shall extend ten (10) feet from the rear or back of the sign. This landscaped area should extend ten (10) from the outer most edges (street edge and opposite edge) of the sign. The intent of this regulation is to provide a landscaped area around the entire perimeter of the proposed digital billboard. Flexibility for this buffer area may be provided and permitted by the site plan review committee if the total required area is not reduced and landscaped area extends beyond the perimeter of the sign to the greatest extent possible.

No parking shall be allowed in the required landscaped area. If the landscaped area is adjacent to a parking area, concrete curbing shall be provided along all edges of the perimeter that abut parking areas or lanes.

Variances shall not be allowed for a reduction in parking spaces for the placement of a new digital billboard as an accessory structure.

D. **Replacing a Static Billboard with a Digital Billboard**:

Billboard replacement, of all or any part thereof, shall require the removal of two additional static billboard structures. A building permit for the removal of three (3) static billboards and installation of one digital billboard (location of sites as approved under the Use Permit Upon Review) for the conversion of an existing static billboard structure to a digital billboard structure. Confirmation of the removal of the required number of existing static billboard structures shall be on file with the Land Development Code Administrator prior to the issuance of a permit to convert an existing static billboard structure to a digital billboard structure.

a. After an existing billboard structure, digital or static, has been removed as a condition of Section 95.10 (3.1) (3D) of the Land Development Code, no other billboard structure, digital or static, shall be placed on that parcel for a minimum of 24 months.

b. The applicant shall provide an inventory of their outdoor advertising sign locations within the city. A company that converts an existing static billboard to a digital billboard must provide, with each permit application, a complete current inventory of its billboards located within the corporate limits of the city of Hattiesburg. The inventory shall include per structure: location (longitude/latitude), size, number of faces and type of illumination.

c. No person shall convert an existing static billboard structure to a digital billboard structure, without first obtaining a sign permit as required by this section.

d. Digital billboards shall be the same size or smaller than the static billboard being replaced, but shall not exceed the dimensions as outlined in Section 95.10 (3.1) (3 E & F) of the Land Development Code, whichever is smaller.

e. A digital billboard replacing a non-conforming static billboard may be exempt from the Land Development Code, Section 95.15, if approved by the City Council, after review by the Hattiesburg Planning Commission and Site Plan Review Committee.

E. **Area and Setback Regulations Chart: Billboard-Digital New**

Billboard-Digital New		
Area and Setback Regulations	**Regional Business Corridors**	**Community Business Corridors**
1. Use Permit Required	Yes	Yes
2. Spacing between Digital Billboards (Primary Structures)	Minimum radius of 1000 feet	Minimum radius of 2,500 feet
3. Spacing between Digital Billboards (Accessory Structures)	Minimum radius of 1,250 feet	Not permitted
4. Spacing between Digital Billboards (Primary Structures) and Static Billboards	Minimum radius of 1,000 feet	Minimum radius of 1,250 feet
5. Spacing between Digital Billboards (Accessory Structures) and Static Billboards	Minimum radius of 1,250	Not permitted
6. Distance from residentially zoned districts	Minimum 100 linear feet (Measured from leading edge of billboard)	Minimum 250 linear feet (Measured from leading edge of billboard)
7. Face Area	Maximum 400 square feet	Maximum 230 square feet
8. Face Width	Maximum 40 feet	Maximum 23 feet
9. Face Height	Maximum 10 feet	Maximum 10 feet
10. Structure Height	Maximum 35 feet	Maximum 21 feet
11. Clearance above ground	Minimum 10 feet	Minimum 10 feet
12. Front Setback	Minimum 25 feet (Measured from leading edge of billboard)	Minimum 25 feet (Measured from leading edge of billboard)
13. Side Setback	Minimum 15/15 feet (Measured from leading edge of billboard)	Minimum 15/15 feet (Measured from leading edge of billboard)
14. Rear Setback	Minimum 25 feet (Measured from leading edge of billboard)	Minimum 25 feet (Measured from leading edge of billboard)
15. Static display time for each message	Minimum eight (8) seconds.	Minimum eight (8) seconds.
16. Off time for each message change	Maximum two (2) seconds	Maximum two (2) seconds

F. **Area and Setback Regulations Chart: Billboard-Replacement**

Billboard-Replacement		
Area and Setback Regulations	**Regional Business Corridors**	**Community Business Corridors**
1. Use Permit Required	Yes	Yes
2. Primary Structure	Does not apply.	Does not apply.
3. Spacing between Digital Billboards	Minimum 1,000 linear feet measured radially	Minimum 2,500 linear feet measured radially
4. Spacing between Digital Billboards and Static Billboards	Minimum 1,000 linear feet measured radially	Minimum 1,250 linear feet measured radially
5. Distance from residentially zoned districts	Does not apply.	Does not apply.
6. Face Area	Maximum 400 square feet	Maximum 230 square feet
7. Face Width	Maximum 40 feet	Maximum 23 feet
8. Face Height	Maximum 10 feet	Maximum 10 feet
9. Structure Height	Maximum 35 feet	See Section 95.10 (3.1) (3Dd)
10. Clearance above ground	Minimum 10 feet	Minimum 10 feet
11. Front Setback	Does not apply.	Does not apply.
12. Side Setback	Does not apply.	Does not apply.
13. Rear Setback	Does not apply.	Does not apply.
14. Static display time for each message	Minimum eight (8) seconds.	Minimum eight (8) seconds.
15. Off time for each message change	Maximum two (2) seconds	Maximum two (2) seconds

G. **Movement:** The image will change instantaneously as seen by the human eye, and shall not use blinking, fading, rolling, shading, dissolving, or similar effects as part of the change.

H. **Light levels:** All digital billboards shall be equipped with light sensing devices or a scheduled dimming timer that will automatically dim the intensity of the light emitted by the sign during ambient low-light conditions and at night so that the sign does not exceed the maximum brightness levels allowed in this section.

a. Maximum brightness shall not exceed five thousand (5,000) nits when measured from the sign's face at its maximum brightness during daylight hours and shall not exceed five hundred (500) nits when measured from the sign's face at its maximum brightness at night.

b. If such sign is located within one hundred (100) feet of a property with residential zoning, the sign must be oriented such that no portion of the electronic sign face is visible from a residentially-zoned property or the brightness is reduced to no more than two hundred fifty (250) nits at night.

c. Prior to the issuance of a permit for such sign, the applicant shall provide written certification from the sign manufacturer that the light intensity has been factory preset not to exceed the levels specified above.

I. **Malfunctions:** Any malfunction shall be repaired or disconnected within 48 hours by the owner or operator of such billboard.

J. **Prohibited Locations:** Digital billboard signs are prohibited in any designated local historic districts, or along Veteran's Memorial Blvd. and Classic Drive.

95.10 (3.1) (4) Corridor Designations:

A. **Regional Business Corridors**
The Regional Business District is primarily a non-residential district located along major arterial streets and highways. The land uses in this district may generate a higher volume of regional traffic and/or require frequent access by large trucks and commercial vehicles. The characteristics of this district include the following: suburban-style commercial centers and big-box buildings; high-density residential developments such as apartment complexes; large, private parking areas; and light industrial campuses and employment centers.

a. U.S. Highway 49: From Northern city limit southward to intersection with Old Highway 42;

b. U.S. Highway 49: From intersection at Edwards Street and Elk's Lake Road south to southern city limit.

c. Removed

d. U.S. Highway 98: From Western city limit eastward to intersection with Interstate 59;

e. U.S. Highway 98: From Eastern city limit westward to intersection with Interstate 59;

f. Interstate 59

B. **Community Business Corridors**

The Community Business District is primarily a non-residential corridor surrounded by single and multi-family residential districts located along the city's interior roadways. In this district, certain residential and non- residential land uses may be found that exhibit suburban development patterns, as well as development patterns that complement the residential, pedestrian-oriented character of surrounding neighborhoods.

The characteristics of this district include less-intensive commercial uses than are found in the Regional Business District.

a. U.S. Highway 49: From intersection at Old Highway 42 southward to intersection with Edwards Street.

b. Old Highway 42: From intersection at Main Street eastward to city limit.

c. Broadway Drive: From intersection at West Pine Street southwesterly to intersection with U.S. Highway 49.

d. Hardy Street: From intersection at Interstate 59 eastward to intersection with U.S. Highway 49.

e. Bouie Street: From intersection at Old Highway 42 south to intersection with East 4th Street.

f. James Street (north): From the intersection at Edwards Street south to intersection with J. M. Tatum Industrial Drive.

g. WSF Tatum Boulevard: From U.S. Highway 11 to U.S. Highway 49.

h. Old Highway 42: From intersection at U.S. Highway 49 to Main Street.

95.10 (3.1) (5) Most Restrictive Law:

If any provision of this ordinance is in conflict with any other legally adopted regulation, the most restrictive requirement shall govern."

SECTION 3. Except as hereby expressly changed and amended, the aforesaid Land Development Code, Ordinance Number 2330, adopted December 5, 1989, as amended, of said City of Hattiesburg, Mississippi, shall be and remain in full force and form as adopted.

SECTION 4. That this Ordinance take effect and be in force thirty (30) days from and after passage as provided by law.

The foregoing Ordinance having been reduced to writing, the same was introduced by Councilmember Naylor, seconded by Councilmember Delgado, and was adopted by the following vote to-wit:

YEAS: Bradley, Delgado, Carroll, Ware, Naylor

NAYS: None

THE President thereby declared the motion carried and the foregoing Ordinance adopted and approved, this the 6th day of November A.D., 2012.

(S E A L)

ATTEST:

CLERK OF COUNCIL

ADOPTED:

PRESIDENT

THE above foregoing Ordinance having been submitted to and approved by the Mayor, this the 6th day of November A.D., 2012.

ATTEST:

CITY CLERK

APPROVED:

MAYOR

MINUTES

OF THE

Special MEETING

OF THE

HATTIESBURG PLANNING COMMISSION

October 18, 2012

The Hattiesburg Planning Commission meet in a Special session on October 18, 2012 at 1:10 p.m. at the Jackie Dole Community Center, 220 West Front Street, Hattiesburg, Mississippi. Richard Conville, Chairman, presiding.

Commissioners Present: Robin Roberts
Richard Conville, Chairman
Joseph White, Vice-Chairman
Linda McMurtrey, Secretary
Judy Corts
Don McCleskey

Commissioners Absent: Annie Pope
Marjorie Chambers
Jessie Wilson

Also Present: Pattie Brantley, AICP, Director of Urban Development
Donovan Scruggs, AICP, Planning Manager
Chantell Hypolite, Planner Apprentice

Richard Conville, Chairman, declared the regular meeting of the Hattiesburg Planning Commission open and in session.

Invocation: Joseph White, Vice-Chairman

AGENDA REVIEW

There came the matter of the Agenda for the October 18, 2012 meeting. A motion was made to approve the agenda.

Motion made by: Lind McMurtrey

Motion seconded by: Joseph White

Commissioners voting aye: Don McCleskey
Robin Roberts
Joseph White
Judy Corts
Linda McMurtrey

Commissioners voting nay: None

Commissioners abstaining: None

Introduction: Donovan Scruggs introduced Chantell Hypolite, Planner Apprentice, to the Planning Commission.

Planning Report:

Donovan Scruggs, AICP noted that The American Planning Association State Conference is next week

October 24-26 in Meridian, MS. He informed the board that the Planning Staff which consist of Director Pattie Brantley, Justin Heskew, and Donovan Scruggs, AICP will be out October 24-26. He also informed them of the Commissioners training course that is being offered at the state conference.

Public Hearing:

Chairman Conville declared the Public Hearing open and explained the rules and procedures of the hearing.

There came the matter of item A, Amendments to the Digital Billboard Ordinance.

Scruggs provided a report and discussed with the Commissioners and the Public the Proposed Changes. Comments were provided on the Norman Beasley and David Easterling of Lamar Outdoor Advertising and Leonard Busby of Capturion.

Chairman Conville declared the Public Hearing closed at 1:40 p.m. and the Business Meeting open to vote on the request.

A motion was made to vote to approve the request based on the following reasons: The need to preserve and encourage the stability of the Hattiesburg business community. The need to reinforce Hattiesburg's quality of life, preserves neighborhood identity, and boost community pride. The need to protect the stability, integrity, and character of Hattiesburg's residential. The motion included revisions to the ordinance for clarifications of the measurement (radius) and the green space requirements adjacent to and surrounding a billboard.

Motion made by: Linda McMurtrey

Motion Seconded by: Don McCleskey

Commissioners voting aye: Linda McMurtrey
Robin Roberts
Judy Corts
Joseph White
Don McCleskey

Commissioners voting nay: None

Commissioners abstaining: None

Based on the affirmative votes, the motion passed.

Other Business:

None

A motion was made by commissioner Conville and seconded by Commissioner White to adjourn the meeting.

The meeting was adjourned at 2:35 p.m.

_____
Richard Conville, Chairman

_____

Chantell Hypolite, Recording Secretary

City of Hattiesburg, MS

200 Forrest St.
P.O. Box 1898
Hattiesburg, MS 39401

Master

File Number: 2012-1287

File ID:	2012-1287	**Type:**	Resolution	**Status:**	Passed
Version:	1	**Reference:**		**In Control:**	City Council
				File Created:	10/25/2012
Brief Title:	November 6, 2012 Budget Amendments			**Final Action:**	11/06/2012
				Minute Book Number:	MB2012-1/380

Title: Adopt the November 6, 2012 Amendments to the Budget for the City of Hattiesburg for the fiscal year ending September 30, 2012 and adopt resolution authorizing publication of amendments for funds in excess of 10% of the original appropriation fund balance.

Notes:

Sponsors:		**Enactment Date:**	
Attachments:	November 2012 Proposed Amendments, executed RES 2012-124 November 2012 Proposed Amendments	**Enactment Number:**	
Contact:	Connie Everett	**Meeting Date:**	11/06/2012
Drafter:	Connie Everett	**Effective Date:**	

History of Legislative File

Version:	Acting Body:	Date:	Action:	Sent To:	Due Date:	Return Date:	Result:
1	City Council	11/06/2012	Adopt				Pass

Action Text: A MOTION was made by Council Member Delgado and seconded by Council Member Naylor to Adopt the November 6, 2012 Amendments to the Budget for the City of Hattiesburg for the fiscal year ending September 30, 2012 and adopt resolution authorizing publication of amendments for funds in excess of 10% of the original appropriation fund balance.

There being no discussion, the Motion received the affirmative vote of the Council as follows:

Yeas: 5 - Bradley, Delgado, Carroll, Ware and Naylor

Nays: 0

Yea: 5 President Bradley
Council Member Delgado
Council Member Carroll
Vice President Ware
Council Member Naylor

TEL-No Vote: 0

Text of Legislative File 2012-1287

Title
Adopt the November 6, 2012 Amendments to the Budget for the City of Hattiesburg for the fiscal year ending September 30, 2012 and adopt resolution authorizing publication of amendments for funds in excess of 10% of the original appropriation fund balance.

Summary

Budget Information

Expenditure Type

Purchasing Item

Publication Information

MEMORANDUM

TO: ***Mayor DuPree; Members of City Council***
FROM: ***Connie Everett, CFO***
DATE: ***November 6, 2012***
SUBJECT: ***Proposed Budget Amendments***

The amendments detailed below are necessary to adjust estimated beginning fund balances to the actual amounts, as well as to budget for open purchase orders carried from FY 2012, which will be paid in FY 2013. The amendments for the General Fund will be reflected as a change to the budgeted ending cash balance.

Budgeted Ending Cash		$2,270,959
Revenue Adjustments:		
Federal Grants	42,419	
State Grants	-3,295	
State Shared Revenue	125,754	
Miscellaneous	5,000	
Non-Revenue Receipts	567,112	
Adjust Beginning Cash to actual	231,301	968,291
Expenditure Adjustments:		
Council – software	-4,350	
City Court – prior year purchase order	-2,801	
Human Resources – background check fee	-3,200	
Loss Control – prior year purchase order	-217	
Urban Dev – prior year purchase orders	-3,876	
Info.Systems – prior year purchase order & Kronos	-435,904	
Gen.Govt.Bldg - prior year purchase order	-1,400	
Police – grant adjustment & radars for motorcycles	-57,051	
P/F Training – grant adjustments, prior yr purchase orders	-118,507	
Fire – prior year purchase order	-1,600	
Code Enforcement – prior year purchase orders	-2,822	
Traffic – prior year purchase order (bucket truck)	-85,173	
Streets – prior year purchase orders; mower purchase	-24,790	
Engineering – prior year purchase order	-8,947	
GOFS – prior year purchase order	-285	
Drainage – prior year purchase orders	-3,396	
Construction – prior year purchase order	-10,207	
Sanitation – prior year purchase order	-6,704	
Street Cleaning – prior year purchase order (sweeper)	-204,793	
Health – prior year purchase order	-1,106	
Debt Service – debt pmts for Kronos and street sweeper	-173,600	
Parking – prior year purchase order	-3,137	
Transfers – increase transfer to Community Ctrs budget	-20,000	1,173,866
Amended Budgeted Ending Cash		**$2,065,384**

Parks & Recreation Fund:	
Prior year purchase orders (tennis courts)	$ 39,789
Municipal Fire Protection Fund:	
Prior year purchase orders	$ 6,728
Water & Sewer O & M Fund:	
Prior year purchase orders (plant repairs and sewer truck)	$ 381,810
Police Forfeitures Fund:	
Adjust beginning cash	$ -965
Airport Improvement Fund:	
Adjust grant revenues and funds expended	$ -271,311
Municipal Road & Bridge Fund:	
Adjust grant revenues and funds expended	$ 214,941
Mass Transit Fund:	
Adjust budget for grant award	$ 598,049
Community Centers Fund:	
Adjust beginning cash and budget for planned renovation projects	$ -68,100
CDBG Fund:	
Adjust beginning cash	$ -23,136
Series 2009 Bond Construction (AMR Project) Fund:	
Adjust beginning cash	$ -150,282
MDB Construction Fund:	
Adjust beginning cash	$ 85,715
Kamper Park Improvements Fund:	
Adjust beginning cash	$ -13,903
Series 2012 Water & Sewer Bond Construction Fund:	
Adjust beginning cash and funds expended	$-1,111,122

If you should need further explanation of the above information, please give me a call.

RESOLUTION

WHEREAS, the Mayor and City Council of the City of Hattiesburg, Mississippi, have determined that expenditures within the City will exceed the original budget appropriation; and

WHEREAS, the additional appropriation needed is in excess of ten percent (10%) of the original appropriation, and in accordance with Section 21-35-25 of the Mississippi Code of 1972, as amended, shall be published;

NOW, THEREFORE, BE IT RESOLVED BY THE COUNCIL OF THE CITY OF HATTIESBURG:

Section 1. That the following budget amendments are hereby authorized to be made in the City's General Fund General Government Capital Outlay Unappropriated Fund Balance:

ORIGINAL BALANCE	CUMULATIVE AMENDMENTS	AMENDED BUDGET	DESCRIPTION OF ITEMS NOT PREVIOUSLY LISTED
$319,500	$440,254	$759,754	Budget for purchase orders carried from prior year and purchase of software

Section 2. That the following budget amendments are hereby authorized to be made in the City's General Fund Police/Fire Training Supplies Unappropriated Fund Balance:

ORIGINAL BALANCE	CUMULATIVE AMENDMENTS	AMENDED BUDGET	DESCRIPTION OF ITEMS NOT PREVIOUSLY LISTED
$146,368	$33,290	$179,658	Budget for purchase orders carried from prior year and grant allocation

Section 3. That the following budget amendments are hereby authorized to be made in the City's General Fund Police/Fire Training Capital Outlay Unappropriated Fund Balance:

ORIGINAL	CUMULATIVE	AMENDED	DESCRIPTION OF ITEMS NOT PREVIOUSLY

BALANCE	AMENDMENTS	BUDGET	LISTED
$ -0-	$74,694	$74,694	Budget for purchase orders carried from prior year

Section 4. That the following budget amendments are hereby authorized to be made in the City's General Fund Fire Capital Outlay Unappropriated Fund Balance:

ORIGINAL BALANCE	CUMULATIVE AMENDMENTS	AMENDED BUDGET	DESCRIPTION OF ITEMS NOT PREVIOUSLY LISTED
$ -0-	$23,000	$23,000	Reallocate funds for repairs to fire station driveway

Section 5. That the following budget amendments are hereby authorized to be made in the City's General Fund Public Services Capital Outlay Unappropriated Fund Balance:

ORIGINAL BALANCE	CUMULATIVE AMENDMENTS	AMENDED BUDGET	DESCRIPTION OF ITEMS NOT PREVIOUSLY LISTED
$1,030,845	$300,404	$1,331,249	Budget for purchase orders carried from prior year for bucket truck, street sweeper and purchase of mower

Section 6. That the following budget amendments are hereby authorized to be made in the City's Water & Sewer Operation & Maintenance Fund Capital Outlay Unappropriated Fund Balance:

ORIGINAL BALANCE	CUMULATIVE AMENDMENTS	AMENDED BUDGET	DESCRIPTION OF ITEMS NOT PREVIOUSLY LISTED
$122,500	$312,840	$435,340	Budget for purchase orders carried from prior year for sewer truck

Section 7. That the following budget amendments are hereby authorized to be made in the City's Mass Transit Fund Capital Outlay Unappropriated Fund Balance:

ORIGINAL	CUMULATIVE	AMENDED	DESCRIPTION OF ITEMS NOT PREVIOUSLY

BALANCE	AMENDMENTS	BUDGET	LISTED
$422,579	$598,049	$1,020,628	Budget grant award for purchase of buses

Section 8. That the following budget amendments are hereby authorized to be made in the City's Mississippi Development Bank Construction Fund Capital Outlay Unappropriated Fund Balance:

ORIGINAL BALANCE	CUMULATIVE AMENDMENTS	AMENDED BUDGET	DESCRIPTION OF ITEMS NOT PREVIOUSLY LISTED
$42,207	$85,715	$127,922	Adjust beginning cash and budget for capital projects

Section 9 . That public interest and necessity requiring same, this resolution shall become effective immediately from and after passage, but nevertheless to be published according to law.

The above and foregoing Resolution, after having been first reduced to writing, was introduced by Councilperson _____, seconded by Councilperson _____, and was adopted by the following, to wit;

YEAS: NAYS:

The President thereby declared the motion carried and the Resolution adopted, this the 6th day of November, 2012.

(S E A L)

ATTEST:

ADOPTED:

CLERK OF COUNCIL

PRESIDENT

The above and foregoing Resolution having been submitted to and approved by the Mayor, this the 6th day of November, 2012.

ATTEST:

APPROVED:

CITY CLERK

MAYOR

CITY OF HATTIESBURG, MS. - GENERAL FUND
Analysis of Revenue and Expenditure Budgets
Fiscal Year Ending September 30, 2013

	Original FY 2013 Budgets	November Amend'ts	Amended Budgets
Revenues & Beg. Cash Balance:			
Taxes -Other	$28,000		$28,000
Licenses & Permits	4,440,000		4,440,000
Intergovernmental Revenues:			
Federal	718,771	42,419	761,190
State	278,420	-3,295	275,125
State-Shared	20,456,000	125,754	20,581,754
County/City Shared	66,000		66,000
Charges for Services:			
Public Safety	190,000		190,000
Streets	20,100		20,100
Sanitation	2,220,000		2,220,000
Misc.	0		0
Fines & Forf.	1,602,000		1,602,000
Misc. Revenues	200,350	5,000	205,350
Transfers-In	794,475		794,475
Non-Revenue Receipts	1,021,400	567,112	1,588,512
TOTAL REVENUES EXCLUSIVE OF			0
PROPERTY TAXES	$32,035,516	$736,990	$32,772,506
Beg. Fund Balance	4,600,000	231,301	4,831,301
Property Tax Levy	12,285,000	0	12,285,000
TOTAL AVAIL. REVENUES	**$48,920,516**	**$968,291**	**$49,888,807**
THE GENERAL FUND EXPENDITURE BUDGETS:			
City Council			
Personnel	$201,850		$201,850
Supplies & Expenses	3,400		3,400
Other Services & Charges	122,465		122,465
Capital Outlays	74,000	4,350	78,350
Total - City Council	$401,715	$4,350	$406,065
City Court			
Personnel	$957,552		$957,552
Supplies & Expenses	13,515		13,515
Other Services & Charges	141,418	2,801	144,219
Capital Outlays	0		0
Total - City Court	$1,112,485	$2,801	$1,115,286
Mayor/Admin.			
Personnel	$533,566		$533,566
Supplies & Expenses	12,900		12,900
Other Services & Charges	103,702		103,702
Capital Outlays	0		0
Total - Mayor/Admin.	$650,168	$0	$650,168
Elections			
Personnel	$0		$0
Supplies & Expenses	2,000		2,000
Other Services & Charges	56,000		56,000
Capital Outlays	0		0
Total - Elections	$58,000	$0	$58,000
Muni. Clerk			
Personnel	$155,351		$155,351
Supplies & Expenses	3,800		3,800
Other Services & Charges	34,695		34,695
Capital Outlays			0
Total - Muni Clerk	$193,846	$0	$193,846
Accounting			
Personnel	$271,881		$271,881
Supplies & Expenses	6,855		6,855
Other Services & Charges	2,075		2,075
Capital Outlays			0
Total - Accounting	$280,811	$0	$280,811
Purchasing			
Personnel	$134,382		$134,382
Supplies & Expenses	6,628		6,628
Other Services & Charges	900		900
Capital Outlays			0
Total - Purchasing	$141,910	$0	$141,910
City Attorney			
Personnel	$93,242		$93,242
Supplies & Expenses			0
Other Services & Charges	18,500		18,500
Capital Outlays			0
Total - City Attorney	$111,742	$0	$111,742
Human Resources			
Personnel	$196,129		$196,129
Supplies & Expenses	8,920		8,920
Other Services & Charges	4,640	3,200	7,840

CITY OF HATTIESBURG, MS. - GENERAL FUND
Analysis of Revenue and Expenditure Budgets
Fiscal Year Ending September 30, 2013

	Original FY 2013 Budgets	November Amend'ts	Amended Budgets
Capital Outlays			0
Total - Human Resources	$209,689	$3,200	$212,889
Loss Control			
Personnel	$104,729		$104,729
Supplies & Expenses	5,505	217	5,722
Other Services & Charges	4,845		4,845
Capital Outlays			0
Total - Loss Control	$115,079	$217	$115,296
Urban Development			
Personnel	$459,116		$459,116
Supplies & Expenses	26,960	1,514	28,474
Other Services & Charges	180,841	2,362	183,203
Capital Outlays	0		0
Total - Urban Dev.	$666,917	$3,876	$670,793
Information Systems			
Personnel	$384,354		$384,354
Supplies & Expenses	46,950		46,950
Other Services & Charges	272,150		272,150
Capital Outlays	245,000	435,904	680,904
Total - Inf. Systems	$948,454	$435,904	$1,384,358
Gen. Gov't Building			
Personnel			$0
Supplies & Expenses	27,035		27,035
Other Services & Charges	124,833	1,400	126,233
Capital Outlays			0
Total - Gen. Gov't Building	$151,868	$1,400	$153,268
Intermodal Facility (Depot) O & M:			
Personnel			$0
Supplies & Expenses	13,500		13,500
Other Services & Charges	124,340		124,340
Capital Outlays			0
Total - Depot O & M	$137,840	$0	$137,840
Metro Planning			
Personnel	$209,411		$209,411
Supplies & Expenses	6,300		6,300
Other Services & Charges	6,600		6,600
Capital Outlays	500		500
Total - Metro Planning	$222,811	$0	$222,811
Gen. Gov't Insurance/Other serv.			
Personnel	$3,171		$3,171
Supplies & Expenses	1,200		1,200
Other Services & Charges	1,734,168		1,734,168
Capital Outlays			0
Total - Gen. Gov't Insur/other Serv.	$1,738,539	$0	$1,738,539
Federal Programs Administration			
Personnel	$132,184		132,184
Supplies	9,170		9,170
Other Services & Charges	6,400		6,400
Capital Outlay	0		0
Total - Federal Programs Admin.	$147,754	$0	$147,754
Recap - General Government Cost Centers			
Personnel	***$3,836,918***	***$0***	***$3,836,918***
Supplies & Expenses	***$194,638***	***$1,731***	***$196,369***
Other Services & Charges	***$2,938,572***	***$9,763***	***$2,948,335***
Capital Outlays	***$319,500***	***$440,254***	***$759,754***
Total - Gen. Government	***$7,289,628***	***$451,748***	***$7,741,376***
Police			
Personnel	$9,150,415		$9,150,415
Supplies & Expenses	746,641		746,641
Other Services & Charges	484,291	5,000	489,291
Capital Outlays	564,440	52,051	616,491
Total - Police	$10,945,787	$57,051	$11,002,838
Police & Fire Training			
Personnel	$33,433		$33,433
Supplies & Expenses	146,368	33,290	179,658
Other Services & Charges	122,764	10,523	133,287
Capital Outlays	0	74,694	74,694
Total - Police & Fire Training	$302,565	$118,507	$421,072
Fire			
Personnel	$6,606,588		$6,606,588
Supplies & Expenses	368,855	-19,000	349,855
Other Services & Charges	317,095	-2,400	314,695
Capital Outlays	0	23,000	23,000

CITY OF HATTIESBURG, MS. - GENERAL FUND
Analysis of Revenue and Expenditure Budgets
Fiscal Year Ending September 30, 2013

	Original FY 2013 Budgets	November Amend'ts	Amended Budgets
Total - Fire Dept.	$7,292,538	$1,600	$7,294,138
Code Enforcement			
Personnel	$542,694		$542,694
Supplies & Expenses	31,397	672	32,069
Other Services & Charges	55,572	2,150	57,722
Capital Outlays	42,000		42,000
Total - Code Enforcement	$671,663	$2,822	$674,485
Contractual Services - Public Safety			
Personnel	$162,940		$162,940
Supplies & Expenses	0		0
Other Services & Charges	1,512,445		1,512,445
Capital Outlays			0
Total - Cont. Serv. - Public Safety	$1,675,385	$0	$1,675,385
Public Services Cost Centers:			
Traffic Maint.			
Personnel	$360,960		$360,960
Supplies & Expenses	137,544		137,544
Other Services & Charges	44,492		44,492
Capital Outlays	37,550	85,173	122,723
Total - Traffic Maint.	$580,546	$85,173	$665,719
Streets			
Personnel	$1,689,175		$1,689,175
Supplies & Expenses	466,250	11,536	477,786
Other Services & Charges	233,956	2,816	236,772
Capital Outlays	0	10,438	10,438
Total - Streets	$2,389,381	$24,790	$2,414,171
Street Lights			
Personnel			$0
Supplies & Expenses			0
Other Services & Charges	1,100,000		1,100,000
Capital Outlays			0
Total - Street Lights	$1,100,000	$0	$1,100,000
Engineering			
Personnel	$339,580		$339,580
Supplies & Expenses	19,200		19,200
Other Services & Charges	262,753	8,947	271,700
Capital Outlays	0		0
Total - Engineering	$621,533	$8,947	$630,480
Shop			
Personnel	$462,974		$462,974
Supplies & Expenses	47,675		47,675
Other Services & Charges	47,351		47,351
Capital Outlays	8,000		8,000
Total - Shop	$566,000	$0	$566,000
GOFS			
Personnel	$314,650		$314,650
Supplies & Expenses	16,600	285	16,885
Other Services & Charges	24,535		24,535
Capital Outlays	5,945		5,945
Total - GOFS	$361,730	$285	$362,015
Drainage			
Personnel	$170,878		$170,878
Supplies & Expenses	74,330	3,396	77,726
Other Services & Charges	436,000		436,000
Capital Outlays	934,850		934,850
Total - Drainage	$1,616,058	$3,396	$1,619,454
Construction			
Personnel	$646,819		$646,819
Supplies & Expenses	140,634		140,634
Other Services & Charges	106,035	10,207	116,242
Capital Outlays	44,500		44,500
Total - Construction	$937,988	$10,207	$948,195
Sanitation			
Personnel	$1,278,299		$1,278,299
Supplies & Expenses	341,350	6,704	348,054
Other Services & Charges	954,865		954,865
Capital Outlays	0		0
Total - Sanitation	$2,574,514	$6,704	$2,581,218
Street Cleaning			
Personnel	$63,720		$63,720
Supplies & Expenses	24,800		24,800
Other Services & Charges	11,100		11,100
Capital Outlays	0	204,793	204,793

CITY OF HATTIESBURG, MS. - GENERAL FUND
Analysis of Revenue and Expenditure Budgets
Fiscal Year Ending September 30, 2013

	Original FY 2013 Budgets	November Amend'ts	Amended Budgets
Total - Street Cleaning	$99,620	$204,793	$304,413
Health			
Personnel	$405,904		$405,904
Supplies & Expenses	143,900	1,106	145,006
Other Services & Charges	8,650		8,650
Capital Outlays	0		0
Total - Health	$558,454	$1,106	$559,560
Recap - Public Services:			
Personnel	***$5,732,959***	***$0***	***$5,732,959***
Supplies & Expenses	***$1,412,283***	***23,027***	***1,435,310***
Other Services & Charges	***$3,229,737***	***21,970***	***3,251,707***
Capital Outlays	***$1,030,845***	***300,404***	***1,331,249***
Total - Public Services	***$11,405,824***	***$345,401***	***$11,751,225***
Animal Control			
Personnel	$126,599		$126,599
Supplies & Expenses	23,950		23,950
Other Services & Charges	123,073		123,073
Capital Outlays	0		0
Total - Animal Control	$273,622	$0	$273,622
Human/Social Assist.			
Personnel			$0
Supplies & Expenses			0
Other Services & Charges	159,500		159,500
Capital Outlays			0
Total - Human/Social Assist.	$159,500	$0	$159,500
Economic Dev.			
Personnel			$0
Supplies & Expenses			0
Other Services & Charges	160,000		160,000
Capital Outlays			0
Total - Economic Dev.	$160,000	$0	$160,000
Debt Service			
Principal	$1,741,550	$162,000	$1,903,550
Interest	191,175	$11,600	$202,775
Total Debt Service	$1,932,725	$173,600	$2,106,325
Airport			
Personnel	$96,630		$96,630
Supplies & Expenses	56,198		56,198
Other Services & Charges	72,975		72,975
Capital Outlays	0		0
Total - Airport	$225,803	$0	$225,803
Cemetery			
Personnel	$613,452		$613,452
Supplies & Expenses	89,350		89,350
Other Services & Charges	53,350		53,350
Capital Outlays	79,500		79,500
Total - Cemetery	$835,652	$0	$835,652
Parking Garages			
Personnel	$191,979		$191,979
Supplies & Expenses	7,250		7,250
Other Services & Charges	82,402	3,137	85,539
Capital Outlays	10,000		10,000
Total - Parking Garages	$291,631	$3,137	$294,768
Transfers to Other Funds	$3,187,234	20,000	$3,207,234
EXPENDITURES & TRANSFERS	**$46,649,557**	**$1,173,866**	**$47,823,423**
Recap - General Fund			
Personnel	*$27,094,607*	*$0*	*$27,094,607*
Supplies & Expenses	*3,076,930*	*39,720*	*3,116,650*
Other Services & Charges	*9,311,776*	*50,143*	*9,361,919*
Capital Outlays	*2,046,285*	*890,403*	*2,936,688*
Principal Payments	*1,741,550*	*162,000*	*1,903,550*
Interest Payments	*191,175*	*11,600*	*202,775*
Total - Gen. Fund Cost Centers	*$43,462,323*	*$1,153,866*	*$44,616,189*
Transfers to Other Funds	*3,187,234*	*20,000*	*3,207,234*
Total - Expenditures & Transfers	*$46,649,557*	*$1,173,866*	*$47,823,423*
Ending Cash Budget	**$2,270,959**	**-$205,575**	**$2,065,384**

CITY OF HATTIESBURG, MS - GENERAL FUND
Analysis of Expenditure Budgets - Funds Other Than General
Fiscal Year Ending September 30, 2013

	Original FY 2013 Budgets	Nov. Amend'ts	Amended Budgets
Parks & Recreation (Fund #2):			
Recreation Maint. Cost Center			
Personnel	$1,082,984		$1,082,984
Supplies & Expenses	357,446		357,446
Other Services & Charges	189,170	2,089	191,259
Capital Outlays	489,000	35,890	524,890
Total - Recreation Maint.	$2,118,600	$37,979	$2,156,579
Recreation Admin.			
Personnel	$469,918		$469,918
Supplies & Expenses	98,680	1,810	100,490
Other Services & Charges	456,884		456,884
Capital Outlays	0		0
Total - Recreation Admin.	$1,025,482	$1,810	$1,027,292
Kamper Park Zoo			
Personnel			$0
Supplies & Expenses			0
Other Services & Charges			0
Capital Outlays			0
Total - Kamper Park	$0	$0	$0
Recap - Parks & Recreation Fund:			
Personnel	***$1,552,902***	***$0***	***$1,552,902***
Supplies & Expenses	***456,126***	***1,810***	***457,936***
Other Services & Charges	***646,054***	***2,089***	***648,143***
Capital Outlays	***489,000***	***35,890***	***524,890***
Total - Recreation Maint.	***$3,144,082***	***$39,789***	***$3,183,871***
Municipal Fire Protection (Fund #5):			
Personnel			$0
Supplies & Expenses	72,000		72,000
Other Services & Charges	44,500		44,500
Capital Outlays	423,761	6,728	430,489
Principal Payments	148,560		148,560
Interest Payments	23,540		23,540
Total - Municipal Fire Prot. Fun	***$712,361***	***$6,728***	***$719,089***
Special Streets (Fund #8):			
Personnel			$0
Supplies & Expenses			0
Other Services & Charges			0
Capital Outlays	261,000		261,000
Total - Special Streets	***$261,000***	***$0***	***$261,000***
Water & Sewer Operation & Maint. (Fund #9):			
Customer Accounts Cost Center			
Personnel	$231,808	$159,912	$391,720
Supplies & Expenses	7,968	13,000	20,968
Other Services & Charges	121,730	12,300	134,030
Capital Outlays	0	8,000	8,000
Total - Customer Accounts	$361,506	$193,212	$554,718
Water Transmission Cost Center			
Personnel	$897,533	-$159,912	$737,621
Supplies & Expenses	182,600	-10,000	172,600
Other Services & Charges	550,500		550,500
Capital Outlays	40,000		40,000
Total - Water Trans.	$1,670,633	-$169,912	$1,500,721
Plant Cost Center			
Personnel	$554,776		$554,776
Supplies & Expenses	168,450	697	169,147
Other Services & Charges	941,510	44,854	986,364
Capital Outlays	19,500		19,500
Total - Plant	$1,684,236	$45,551	$1,729,787
Sewer Cost Center			
Personnel	$686,706		$686,706
Supplies & Expenses	259,500		259,500
Other Services & Charges	937,250	719	937,969
Capital Outlays	3,000	304,840	307,840
Total - Water Trans.	$1,886,456	$305,559	$2,192,015
Lagoon Cost Center			
Personnel	$258,485		$258,485
Supplies & Expenses	376,800		376,800
Other Services & Charges	1,722,400	7,400	1,729,800
Capital Outlays	60,000		60,000
Principal Payments			0
Interest Payments			0
Total - Lagoon Cost Center	$2,417,685	$7,400	$2,425,085
Recap: Water & Sewer O & M Fund:			
Personnel	***$2,629,308***	***$0***	***$2,629,308***
Supplies & Expenses	***995,318***	***3,697***	***999,015***
Other Services & Charges	***4,273,390***	***65,273***	***4,338,663***
Capital Outlays	***122,500***	***312,840***	***435,340***

CITY OF HATTIESBURG, MS - GENERAL FUND
Analysis of Expenditure Budgets - Funds Other Than General
Fiscal Year Ending September 30, 2013

	Original FY 2013 Budgets	Nov. Amend'ts	Amended Budgets
Principal Payments	*0*	*0*	*0*
Interest Payments	*0*	*0*	*0*
Total - Water & Sewer O & M Fu	***$8,020,516***	***$381,810***	***$8,402,326***
Water & Sewer Bond & Int. (Fund #10):			
Principal Payments	$2,070,000		$2,070,000
Interest Payments	$1,240,325		$1,240,325
Paying Agent Fees	$2,500		$2,500
Total - W & S Bond & Int. Fund	***$3,312,825***	***$0***	***$3,312,825***
Water & Sewer Revenue (Fund #11):			
Principal Payments	$463,210		$463,210
Interest Payments	81,660		81,660
other services & charges	22,400		22,400
Transfers to other funds	14,199,230		14,199,230
Total - W & S Revenue Fund	***$14,766,500***	***$0***	***$14,766,500***
1999 Tax Increment (Walmart) Bond & Int (Fund #12):			
Principal Payments	$55,000		$55,000
Interest Payments	9,200		9,200
Paying Agent Fees	2,000		2,000
Total - 1999 TIF Bond & Int Fund	***$66,200***	***0***	***$66,200***
City Bond & Interest (Fund #13):			
Principal Payments	$3,290,730		$3,290,730
Interest Payments	636,613		636,613
Other Services & Charges	116,759		116,759
Paying Agent Fees	15,000		15,000
Total - 1999 TIF Bond & Int Fund	***$4,059,102***	***$0***	***$4,059,102***
USA Yeast Bond & Interest (Fund #15):			
Principal Payments	$385,000	$0	$385,000
Interest Payments	23,100	0	23,100
other services & charges	5,000		5,000
Total - 1999 TIF Bond & Int Fund	***$413,100***	***0***	***$413,100***
Police Fines & Forfeitures (Fund #19):			
Personnel			$0
Supplies & Expenses	145,400	1,839	147,239
Other Services & Charges	30,000	-2,804	27,196
Capital Outlays	74,600		74,600
Transfers			0
Total - Fines & Forf. Fund	***$250,000***	***-$965***	***$249,035***
Series 2002 TIF Bond & Int (Southern Pointe, Fund #20):			
Principal Payments	$85,000		$85,000
Interest Payments	3,825		3,825
other services & charges	1,250		1,250
Total - 1999 TIF Bond & Int Fund	***$90,075***	***0***	***$90,075***
Series 2004 TIF Bond & Int (Home Depot, Fund #21):			
Principal Payments	$75,000		$75,000
Interest Payments	8,345		8,345
other services & charges	1,000		1,000
Total - 2004 TIF Bond & Int Fund	***$84,345***	***0***	***$84,345***
Series 2003 TIF Bond & Int (Chauvet Sq., Fund #22):			
Principal Payments	$95,000		$95,000
Interest Payments	97,210		97,210
other services & charges	2,000		2,000
Transfers to other Funds			0
Total - 2003 TIF Bond & Int Fund	***$194,210***	***$0***	***$194,210***
Series 2007 TIFBond & Int (Turtle Creek Fund 23):			
Principal Payments	285,000		285,000
Interest Payments	149,776		149,776
Other Services & Charges	5,000		5,000
Total - 2007 TIF Bond & Int Fund	***$439,776***		***$439,776***
Series 2008 TIF Bond & Int (Lincoln Center Fund 24):			
Principal Payments	$35,000		35,000
Interest Payments	$18,700		18,700
Other Services & Charges	$1,000		1,000
Total - 2008 TIF Bond & Int Fund	***$54,700***	***$0***	***$54,700***
Series 2011 TIF Bond & Int (Turtle Creek Commons/Kohl's Fund 25):			
Principal Payments	$60,000		60,000
Interest Payments	$32,000		32,000
Other Services & Charges	$1,000		1,000
Total - 2008 TIF Bond & Int Fund	***$93,000***	***$0***	***$93,000***
Airport Imp. (Fund #39):			
Personnel	$0		$0
Supplies & Expenses	0		0
Other Services & Charges	0		0
Capital Outlays	1,413,440	-271,311	1,142,129
Total - Airport Imp. Fund	***$1,413,440***	***-$271,311***	***$1,142,129***

CITY OF HATTIESBURG, MS - GENERAL FUND
Analysis of Expenditure Budgets - Funds Other Than General
Fiscal Year Ending September 30, 2013

	Original FY 2013 Budgets	Nov. Amend'ts	Amended Budgets
2009 Gen.Oblig.Refunding Bonds (Fund #50)			
Bonds Redeemed			0
Interest on Bonds			0
Paying Agent Fees			0
Other Services & Charges			0
Total - 2007 G.O.Refunding	0	0	0
Municipal Road & Bridge (Fund #72):			
Personnel			$0
Supplies & Expenses	225,000		225,000
Other Services & Charges	666,000	41,650	707,650
Capital Outlays	9,071,294	173,291	9,244,585
Principal	24,293		24,293
Interest	5,690		5,690
Total - Municipal Road & Bridg	***$9,992,277***	***$214,941***	***$10,207,218***
Mass Transit (Fund #73):			
Personnel	$590,784		$590,784
Supplies & Expenses	224,300		224,300
Other Services & Charges	169,900		169,900
Capital Outlays	422,579	598,049	1,020,628
Total - Mass Transit Fund	***$1,407,563***	***$598,049***	***$2,005,612***
Water & Sewer Construction (Fund #75):			
Personnel			$0
Supplies & Expenses			0
Other Services & Charges	1,050,000		1,050,000
Capital Outlays	8,690,553		8,690,553
Total - W & S Construction Fun	***$9,740,553***	***$0***	***$9,740,553***
Community Centers (Fund #77):			
Personnel	$506,314		$506,314
Supplies & Expenses	67,900		67,900
Other Services & Charges	263,150	-39,600	223,550
Capital Outlays	183,500	-28,500	155,000
Total - Community Centers Fun	***$1,020,864***	***-$68,100***	***$952,764***
Series 2009 G.O. Bonds - AMR Project (Fund #78)			
Supplies			0
Other Services & Charges	$100,000	***-$61,850***	38,150
Capital Outlay	100,000	***-$88,432***	11,568
Total - Series 2009 G.O. Bonds	***$200,000***	***-$150,282***	***$49,718***
Community Dev. Block Grant (Fund #82):			
Personnel	$229,589		$229,589
Supplies & Expenses	7,900		7,900
Other Services & Charges	564,755	-23,136	541,619
Capital Outlays	1,171,824		1,171,824
Transfers			0
Total - CDBG Fund	***$1,974,068***	***-$23,136***	***$1,950,932***
Series 2002 TIF (Southern Pointe) Construction (Fund # 88):			
Personnel	$0		$0
Supplies & Expenses	0		0
Other Services & Charges	0		0
Capital Outlays	0		0
Transfers to other Funds			0
Total - Series 2002 Const. Fun	***$0***	***$0***	***$0***
Series 2004 TIF (Home Depot) Construction (Fund # 89):			
Personnel	$0		$0
Supplies & Expenses	0		0
Other Services & Charges	0		0
Capital Outlays	0		0
Transfers	0		0
Total - Series 2004 Const. Fun	***$0***	***$0***	***$0***
Series 2008 G.O. Note (Downtown Lighting)(Fund # 90):			
Personnel	$0		$0
Supplies & Expenses	0		0
Other Services & Charges	0		0
Capital Outlays			0
Transfers	0		0
Total - Series 2004 Const. Fun	***$0***	***$0***	***$0***
TIF (Turtle Creek) Construction (Fund # 91):			
Personnel	$0		$0
Supplies & Expenses	0		0
Other Services & Charges	0		0
Capital Outlays	0		0
Transfers	0		0
Total - Series 2004 Const. Fun	***$0***	***$0***	***$0***
Series 2001 G.O. Bond Construction (Fund # 95):			
Personnel	$0		$0
Supplies & Expenses	0		0

CITY OF HATTIESBURG, MS - GENERAL FUND
Analysis of Expenditure Budgets - Funds Other Than General
Fiscal Year Ending September 30, 2013

	Original FY 2013 Budgets	Nov. Amend'ts	Amended Budgets
Other Services & Charges	0		0
Capital Outlays	187,300		187,300
Transfers	0		0
Total - Series 2001 Const. Fun	***$187,300***	***$0***	***$187,300***
Mississippi Dev. Bank Construction (Fund # 96):			
Personnel	$0		$0
Supplies & Expenses	0		0
Other Services & Charges			0
Capital Outlays	42,207	85,715	127,922
Total - MDB Fund	***$42,207***	***$85,715***	***$127,922***
Kamper Park Imp. (Fund #98):			
Personnel	$0		$0
Supplies & Expenses	0		0
Other Services & Charges	0		0
Capital Outlays	100,000	-13,903	86,097
Total - Kamper Park Imp. Fund	***$100,000***	***-$13,903***	***$86,097***
Series 2010 Water & Sewer G.O. Constr. (Fund #99):			
Personnel			
Supplies & Expenses			
Other Services & Charges			0
Capital Outlay	$868,299		868,299
Total - Series 2010 Constr.	***$868,299***	***$0***	***$868,299***
Series 2012 Water & Sewer Const. (Fund #94):			
Personnel	$0		$0
Supplies & Expenses	0		0
Other Services & Charges	0		0
Capital Outlays	9,106,410	-1,111,122	7,995,288
Transfers Out	0		0
Total - Series 2006 Const.	***$9,106,410***	***-$1,111,122***	***$7,995,288***
GRAND TOTAL - FUNDS OTHER THAN THE GENERAL FUND	$72,014,773	-$311,787	$71,702,986
General Fund	$46,649,557	$1,173,866	$47,823,423
TOTAL EXPENDITURES & TRANS	$118,664,330	$862,079	$119,526,409
Less: Interfund Transfers	-17,386,464	-20,000	-17,406,464
TOTAL EXPENDITURES	$101,277,866	$842,079	$102,119,945
Recap of City-Wide Expenditure Budgets:			
Personnel	***$32,603,504***	***$0***	***$32,603,504***
Supplies & Expenses	***$5,270,874***	***$47,066***	***$5,317,940***
Other Services & Charges	***$17,294,434***	***$31,765***	***$17,326,199***
Capital Outlays	***$34,774,552***	***$589,648***	***$35,364,200***
Principal Payments	***8,813,343***	***162,000***	***8,975,343***
Interest Payments	***2,521,159***	***11,600***	***2,532,759***
Total Expenditure Budgets	***$101,277,866***	***$842,079***	***$102,119,945***

CITY OF HATTIESBURG, MISSISSIPPI
A MUNICIPALITY
BUDGET OF ESTIMATED REVENUES AND EXPENDITURES
For the Fiscal Year Ending September 30, 2013

GENERAL FUND:

REVENUES & BEG. CASH:

Taxes - Other	$28,000
Licenses & Permits	4,440,000
Inter-governmental Revenues:	
Federal Grants	761,190
State Grants	275,125
State-Shared Revenues	20,581,754
County Shared Revenues	66,000
Charges for Services:	
Public safety	190,000
Streets	20,100
Sanitaiton	2,220,000
Misc.	0
Fines & Forfeits	1,602,000
Miscellaneous	205,350
Transfers-In	794,475
Non-Revenue Receipts	1,588,512
Total From All Sources Other Than taxation	32,772,506
Beginning Cash and Investment Balance	4,831,301
Amount to be Raised by Tax Levy	12,285,000
TOTAL FROM ALL SOURCES	**$49,888,807**

EXPENDITURES & ENDING CASH:

General Government:	
Personnel	3,836,918
Supplies & Expenses	196,369
Other services & Charges	2,948,335
Capital Outlays	759,754
Total - General Government	7,741,376
Police Dept.:	
Personnel	9,150,415
Supplies & Expenses	746,641
Other services & Charges	489,291
Capital Outlays	616,491
Total - Police Dept.	11,002,838
Police & Fire Training:	
Personnel	33,433
Supplies & Expenses	179,658
Other services & Charges	133,287
Capital Outlays	74,694
Total - Police & Fire Training	421,072
Fire Dept.:	
Personnel	6,606,588
Supplies & Expenses	349,855
Other services & Charges	314,695
Capital Outlays	23,000
Total - Fire Dept.	7,294,138
Land Development Administration:	
Personnel	542,694
Supplies & Expenses	32,069
Other services & Charges	57,722
Capital Outlays	42,000
Total - Land Dev. Admin.	674,485

Public Safety Contractual Services:	
Personnel	162,940
Other services & Charges	1,512,445
Total - Pub. Safety Cont. Serv.	1,675,385
Public Services:	
Personnel	5,732,959
Supplies & Expenses	1,435,310
Other services & Charges	3,251,707
Capital Outlays	1,331,249
Total - Public Services	11,751,225
Animal Control	
Personnel	126,599
Supplies & Expenses	23,950
Other services & Charges	123,073
Capital Outlays	0
Total - Animal Control	273,622
Human/Social	
Other services & Charges	159,500
Total - Human/Social	159,500
Economic Development	
Personnel	
Supplies & Expenses	
Other services & Charges	160,000
Capital Outlays	0
Total - Eco. Dev.	160,000
Debt Service:	
Prinicpal Payments	1,903,550
Interest Payments	202,775
Total - Debt service	2,106,325
Airport	
Personnel	96,630
Supplies & Expenses	56,198
Other services & Charges	72,975
Capital Outlays	0
Total - Airport	225,803
Cemetery	
Personnel	613,452
Supplies & Expenses	89,350
Other services & Charges	53,350
Capital Outlays	79,500
Total - Cemetery	835,652
Parking Garages	
Personnel	191,979
Supplies & Expenses	7,250
Other services & Charges	85,539
Capital Outlays	10,000
Total - Parking Garages	294,768
Operating Transfers Out	3,207,234
Total Expenditures & Transfers	**47,823,423**
Ending Cash Balance	**$2,065,384**
TOTAL EXPENDITURES AND ENDING CASH BALANCE	**$49,888,807**

CITY OF HATTIESBURG, MISSISSIPPI
A MUNICIPALITY
BUDGET OF ESTIMATED REVENUES AND EXPENDITURES
For the Fiscal Year Ending September 30, 2013

PARKS & RECREATION FUND:

REVENUES & BEG. CASH:

Inter-governmental Revenues:	
Federal Grants	$0
State Grants	0
County Shared Revenues	62,603
Misc. grants	0
Charges for Services:	
Culture & Recreation	40,400
Miscellaneous	80,400
Transfers-In	2,102,234
Non-Revenue Receipts	
Total From All Sources Other Than taxation	2,285,637
Beginning Cash and Investment Balance	203,436
Amount to be Raised by Tax Levy	800,000
TOTAL FROM ALL SOURCES	**$3,289,073**

EXPENDITURES & ENDING CASH:

Culture & Recreation:	
Personnel	1,552,902
Supplies & Expenses	457,936
Other services & Charges	648,143
Capital Outlays	524,890
Total Expenditures	$3,183,871
Cash balance at End of Year	105,202
TOTAL EXPENDITURES AND ENDING CASH BALANCE	**$3,289,073**

CITY OF HATTIESBURG, MISSISSIPPI
A MUNICIPALITY
BUDGET OF ESTIMATED REVENUES AND EXPENDITURES
For the Fiscal Year Ending September 30, 2013

MUNICIPAL FIRE PROTECTION FUND:

REVENUES & BEG. CASH:

Inter-governmental Revenues:	
State-Shared Revenues	$235,000
Charges for Services	95,652
Fines & Forfeits	1,500
Miscellaneous	10,500
Transfers In	0
Non-Revenue Receipts	0
Total From All Sources Other Than taxation	342,652
Beginning Cash and Investment Balance	764,097
TOTAL FROM ALL SOURCES	**$1,106,749**

EXPENDITURES & ENDING CASH:

Public Safety:	
Personnel	$0
Supplies & Expenses	72,000
Other services & Charges	44,500
Capital Outlays	430,489
Lease Debt Service - Principal	148,560
Lease Debt Service - Interest	23,540
Total Expenditures	$719,089
Cash balance at End of Year	387,660
TOTAL EXPENDITURES AND ENDING CASH BALANCE	**$1,106,749**

CITY OF HATTIESBURG, MISSISSIPPI
A MUNICIPALITY
BUDGET OF ESTIMATED REVENUES AND EXPENDITURES
For the Fiscal Year Ending September 30, 2013

SPECIAL STREET
SPECIAL REVENUE FUND:

REVENUES & BEG. CASH:

Inter-governmental Revenues:	
Federal Grants	$0
State Shared Revenues	55,000
Misc. grants	0
Miscellaneous	1,000
Non-Revenue Receipts	0
Total From All Sources Other Than taxation	56,000
Beginning Cash and Investment Balance	205,903
TOTAL FROM ALL SOURCES	**$261,903**

EXPENDITURES & ENDING CASH:

Public Services:	
Supplies & Expenses	0
Other services & Charges	0
Capital Outlays	261,000
Total Expenditures	$261,000
Cash balance at End of Year	903
TOTAL EXPENDITURES AND ENDING CASH BALANCE	**$261,903**

CITY OF HATTIESBURG, MISSISSIPPI
A MUNICIPALITY
BUDGET OF ESTIMATED REVENUES AND EXPENDITURES
For the Fiscal Year Ending September 30, 2013

WATER & SEWER OPERATION AND MAINTENANCE FUND:

REVENUES & BEG. CASH:	
Charges for Services	$20,000
Transfers-In	7,972,295
Miscellaneous	3,000
Non-Revenue Receipts	
Total From All Sources Other Than taxation	7,995,295
Beginning Cash and Investment Balance	760,401
TOTAL FROM ALL SOURCES	**$8,755,696**
EXPENDITURES & ENDING CASH:	
Personnel	2,629,308
Supplies & Expenses	999,015
Other services & Charges	4,338,663
Capital Outlays	435,340
Lease Debt Service - Principal	0
Lease Debt Service - Interest	0
Total Expenditures	$8,402,326
Cash balance at End of Year	353,370
TOTAL EXPENDITURES AND ENDING CASH BALANCE	**$8,755,696**

CITY OF HATTIESBURG, MISSISSIPPI
A MUNICIPALITY
BUDGET OF ESTIMATED REVENUES AND EXPENDITURES
For the Fiscal Year Ending September 30, 2013

WATER & SEWER BOND AND INTEREST FUND:

REVENUES & BEG. CASH:	
Transfers-In	$3,684,460
Miscellaneous	0
Non-Revenue Receipts	
Total Revenues	3,684,460
Beginning Cash Balance	1,652,040
TOTAL FROM ALL SOURCES	**$5,336,500**
EXPENDITURES & ENDING CASH:	
Bonds Redeemed	2,070,000
Interest on Bonds	1,240,325
Paying Agent Fees	2,500
Total Expenditures	**3,312,825**
Cash balance at End of Year	2,023,675
TOTAL EXPENDITURES AND ENDING CASH BALANCE	**$5,336,500**

CITY OF HATTIESBURG, MISSISSIPPI
A MUNICIPALITY
BUDGET OF ESTIMATED REVENUES AND EXPENDITURES
For the Fiscal Year Ending September 30, 2012

WATER & SEWER ENTERPRISE FUND:

REVENUES & BEG. CASH:	
Charges for Services:	
Licenses, Permits & Fees	$5,000
Miscellaneous	2,500
Metered Water Sales	8,075,000
Taps	115,000
Water Turn-On Fees	64,000
Sewer Connections	15,000
Sewer Charges	6,490,000
Total Revenues	14,766,500
Beginning Fund Balance	0
TOTAL FROM ALL SOURCES	**$14,766,500**
EXPENDITURES & ENDING CASH:	
Other Services & Charges	22,400
Principal Redeemed - Notes	463,210
Interest on Notes	81,660
Operating Transfers Out	14,199,230
Total Expenditures	**$14,766,500**
Cash balance at End of Year	**$0**
TOTAL EXPENDITURES AND ENDING CASH BALANCE	**$14,766,500**

CITY OF HATTIESBURG, MISSISSIPPI
A MUNICIPALITY
BUDGET OF ESTIMATED REVENUES AND EXPENDITURES
For the Fiscal Year Ending September 30, 2013

1999 TAX INCREMENT BOND & INTEREST FUND (DEBT SERVICE FUND):

REVENUES & BEG. CASH:	
Interest	$0
County-Shared Revenues	0
Total From All Sources Other Than taxation	0
Beginning Cash and Investment Balance	72,175
Amount to be Raised by Tax Levy	66,188
TOTAL FROM ALL SOURCES	**$138,363**
EXPENDITURES & ENDING CASH:	
General Issues:	
Bonds Redeemed	55,000
Interest on Bonds	9,200
Paying Agent Fees	2,000
Other Services & Charges	
Total Expenditures	$66,200
Cash balance at End of Year	72,163
TOTAL EXPENDITURES AND ENDING CASH BALANCE	**$138,363**

CITY OF HATTIESBURG, MISSISSIPPI
A MUNICIPALITY
BUDGET OF ESTIMATED REVENUES AND EXPENDITURES
For the Fiscal Year Ending September 30, 2013

CITY BOND & INTEREST FUND (DEBT SERVICE FUND):

REVENUES & BEG. CASH:	
County-Shared Revenues	$63,617
Interest	2,000
Non-Revenue receipts	218,850
Transfers-In	399,330
Total From All Sources Other Than taxation	683,797
Beginning Cash and Investment Balance	3,040,036
Amount to be Raised by Tax Levy	2,800,000
TOTAL FROM ALL SOURCES	**$6,523,833**
EXPENDITURES & ENDING CASH:	
General Issues:	
Bonds Redeemed	3,290,730
Interest on Bonds	636,613
Other Services & Charges	131,759
Paying Agent Fees	
Total Expenditures	$4,059,102
Cash balance at End of Year	2,464,731
TOTAL EXPENDITURES AND ENDING CASH BALANCE	**$6,523,833**

CITY OF HATTIESBURG, MISSISSIPPI
A MUNICIPALITY
BUDGET OF ESTIMATED REVENUES AND EXPENDITURES
For the Fiscal Year Ending September 30, 2013

Water & Sewer Bond & Interest Fund (USA Yeast Project):

REVENUES & BEG. CASH:	
Interest	$200
Transfer from Other Funds	310,000
Total From All Sources Other Than taxation	310,200
Beginning Cash and Investment Balance	141,841
TOTAL FROM ALL SOURCES	**$452,041**
EXPENDITURES & ENDING CASH:	
General Issues:	
Bonds Redeemed	$385,000
Interest on Bonds	23,100
Other Services & Charges	5,000
Total Expenditures	$413,100
Cash balance at End of Year	38,941
TOTAL EXPENDITURES AND ENDING CASH BALANCE	**$452,041**

CITY OF HATTIESBURG, MISSISSIPPI
A MUNICIPALITY
BUDGET OF ESTIMATED REVENUES AND EXPENDITURES
For the Fiscal Year Ending September 30, 2013

FINES & FORFEITURES FUND:

REVENUES & BEG. CASH:	
State grants	
Charges for Services	
Fines & Forfeits	
Miscellaneous	0
Non-Revenue Receipts	0
Total From All Sources Other Than taxation	0
Beginning Cash and Investment Balance	247,196
TOTAL FROM ALL SOURCES	**$247,196**
EXPENDITURES & ENDING CASH:	
Public Safety:	
Personnel	0
Supplies & Expenses	145,400
Other services & Charges	27,196
Capital Outlays	74,600
Transfers Out	
Total Expenditures	$247,196
Cash balance at End of Year	0
TOTAL EXPENDITURES AND ENDING CASH BALANCE	**$247,196**

CITY OF HATTIESBURG, MISSISSIPPI
A MUNICIPALITY
BUDGET OF ESTIMATED REVENUES AND EXPENDITURES
For the Fiscal Year Ending September 30, 2013

SERIES 2002 TIF BOND & INTEREST FUND (Southern Pointe Project):

REVENUES & BEG. CASH:	
Interest	$0
County-Shared Revenues	39,294
Total From All Sources Other Than taxation	39,294
Beginning Cash and Investment Balance	64,724
Amount to be Raised by Tax Levy	50,181
TOTAL FROM ALL SOURCES	**$154,199**
EXPENDITURES & ENDING CASH:	
General Issues:	
Bonds Redeemed	85,000
Interest on Bonds	3,825
Other Services & Charges	1,250
Total Expenditures	**$90,075**
Cash balance at End of Year	64,124
TOTAL EXPENDITURES AND ENDING CASH BALANCE	**$154,199**

CITY OF HATTIESBURG, MISSISSIPPI
A MUNICIPALITY
BUDGET OF ESTIMATED REVENUES AND EXPENDITURES
For the Fiscal Year Ending September 30, 2013

SERIES 2004 TIF BOND & INTEREST FUND (Home Depot Project):

REVENUES & BEG. CASH:	
Interest	$100
County-Shared Revenues	26,184
Transfer From Other Funds	0
Total From All Sources Other Than taxation	26,284
Beginning Cash and Investment Balance	123,263
Amount to be Raised by Tax Levy	58,360
TOTAL FROM ALL SOURCES	**$207,907**
EXPENDITURES & ENDING CASH:	
General Issues:	
Bonds Redeemed	75,000
Interest on Bonds	8,345
Other Services & Charges	1,000
Total Expenditures	**$84,345**
Cash balance at End of Year	123,562
TOTAL EXPENDITURES AND ENDING CASH BALANCE	**$207,907**

CITY OF HATTIESBURG, MISSISSIPPI
A MUNICIPALITY
BUDGET OF ESTIMATED REVENUES AND EXPENDITURES
For the Fiscal Year Ending September 30, 2013

SERIES 2003 TIF BOND & INTEREST FUND (Chauvet Square Project):

REVENUES & BEG. CASH:	
Interest	$0
Transfer From Other Funds	0
Total From All Sources Other Than taxation	0
Beginning Cash and Investment Balance	141,739
Amount to be Raised by Tax Levy	241,356
TOTAL FROM ALL SOURCES	**$383,095**
EXPENDITURES & ENDING CASH:	
General Issues:	
Bonds Redeemed	95,000
Interest on Bonds	97,210
Other Services & Charges	2,000
Transfers to Other Funds	0
Total Expenditures	**$194,210**
Cash balance at End of Year	188,885
TOTAL EXPENDITURES AND ENDING CASH BALANCE	**$383,095**

CITY OF HATTIESBURG, MISSISSIPPI
A MUNICIPALITY
BUDGET OF ESTIMATED REVENUES AND EXPENDITURES
For the Fiscal Year Ending September 30, 2013

SERIES 2007 TIF BOND & INTEREST FUND (Turtle Creek):

REVENUES & BEG. CASH:	
Interest	$300
County Shared Revenue	$108,694
Transfer From Other Funds	
Total From All Sources Other Than taxation	108,994
Beginning Cash and Investment Balance	219,466
Amount to be Raised by Tax Levy	352,517
TOTAL FROM ALL SOURCES	**$680,977**
EXPENDITURES & ENDING CASH:	
General Issues:	
Bonds Redeemed	285,000
Interest on Bonds	149,776
Other Services & Charges	5,000
Total Expenditures	$439,776
Cash balance at End of Year	241,201
TOTAL EXPENDITURES AND ENDING CASH BALANCE	**$680,977**

CITY OF HATTIESBURG, MISSISSIPPI
A MUNICIPALITY
BUDGET OF ESTIMATED REVENUES AND EXPENDITURES
For the Fiscal Year Ending September 30, 2013

2008 TIF BOND AND INTEREST FUND
FUND (Lincoln Center):

REVENUES & BEG. CASH:	
Interest	$0
County Shared Revenue	$0
Transfer From Other Funds	0
Total From All Sources Other Than taxation	0
Beginning Cash and Investment Balance	118,060
Amount to be Raised by Tax Levy	76,913
TOTAL FROM ALL SOURCES	**$194,973**
EXPENDITURES & ENDING CASH:	
General Issues:	
Bonds Redeemed	35,000
Interest on Bonds	18,700
Other Services & Charges	1,000
Total Expenditures	$54,700
Cash balance at End of Year	140,273
TOTAL EXPENDITURES AND ENDING CASH BALANCE	**$194,973**

CITY OF HATTIESBURG, MISSISSIPPI
A MUNICIPALITY
BUDGET OF ESTIMATED REVENUES AND EXPENDITURES
For the Fiscal Year Ending September 30, 2013

2011 TIF BOND AND INTEREST FUND
FUND (Turtle Creek Crossing/Kohl's):

REVENUES & BEG. CASH:	
Interest	$0
County Shared Revenue	$32,200
Transfer From Other Funds	0
Total From All Sources Other Than taxation	32,200
Beginning Cash and Investment Balance	15,788
Amount to be Raised by Tax Levy	74,339
TOTAL FROM ALL SOURCES	**$122,327**
EXPENDITURES & ENDING CASH:	
General Issues:	
Bonds Redeemed	60,000
Interest on Bonds	32,000
Other Services & Charges	1,000
Total Expenditures	$93,000
Cash balance at End of Year	29,327
TOTAL EXPENDITURES AND ENDING CASH BALANCE	**$122,327**

CITY OF HATTIESBURG, MISSISSIPPI
A MUNICIPALITY
BUDGET OF ESTIMATED REVENUES AND EXPENDITURES
For the Fiscal Year Ending September 30, 2013

AIRPORT IMPROVEMENT SPECIAL REVENUE FUND:

REVENUES & BEG. CASH:	
Federal Grants	$990,835
State Shared Revenues	0
Miscellaneous	26,360
Transfers In	
Non-Revenue Receipts	0
Total From All Sources Other Than taxation	1,017,195
Beginning Cash and Investment Balance	124,934
TOTAL FROM ALL SOURCES	**$1,142,129**
EXPENDITURES & ENDING CASH:	
Public Services:	
Other services & Charges	0
Capital Outlays	1,142,129
Total Expenditures	**$1,142,129**
Cash balance at End of Year	0
TOTAL EXPENDITURES AND ENDING CASH BALANCE	**$1,142,129**

CITY OF HATTIESBURG, MISSISSIPPI
A MUNICIPALITY
BUDGET OF ESTIMATED REVENUES AND EXPENDITURES
For the Fiscal Year Ending September 30, 2013

MUNICIPAL ROAD & BRIDGE
SPECIAL REVENUE FUND:

REVENUES & BEG. CASH:

Inter-governmental Revenues:	
State Grants	$6,945,617
Federal Grants	0
County Shared Revenues	1,992,000
Miscellaneous	682,700
Non-Revenue Receipts	0
Total From All Sources Other Than taxation	9,620,317
Beginning Cash and Investment Balance	592,759
TOTAL FROM ALL SOURCES	**$10,213,076**

EXPENDITURES & ENDING CASH:

Public Services:	
Supplies & Expenses	225,000
Other services & Charges	707,650
Capital Outlays	9,244,585
Principal Payments	24,293
Interest Payments	5,690
Total Expenditures	**$10,207,218**
Cash balance at End of Year	5,858
TOTAL EXPENDITURES AND ENDING CASH BALANCE	**$10,213,076**

CITY OF HATTIESBURG, MISSISSIPPI
A MUNICIPALITY
BUDGET OF ESTIMATED REVENUES AND EXPENDITURES
For the Fiscal year Ending September 30, 2013

MASS TRANSIT OPERATING
SPECIAL REVENUE FUND:

REVENUES & BEG. CASH:

Inter-governmental Revenues:	
Federal Grants	$1,974,488
State Grants	$0
Miscellaneous	38,400
Transfers-In	335,000
Total From All Sources Other Than taxation	2,347,888
Beginning Cash and Investment Balance	137,431
Amount to be Raised by Tax Levy	200,000
TOTAL FROM ALL SOURCES	**$2,685,319**

EXPENDITURES & ENDING CASH:

Personnel	590,784
Supplies & Expenses	224,300
Other services & Charges	169,900
Capital Outlays	1,020,628
Total Expenditures	$2,005,612
Cash balance at End of Year	679,707
TOTAL EXPENDITURES AND ENDING CASH BALANCE	**$2,685,319**

CITY OF HATTIESBURG, MISSISSIPPI
A MUNICIPALITY
BUDGET OF ESTIMATED REVENUES AND EXPENDITURES
For the Fiscal Year Ending September 30, 2013

WATER & SEWER CONSTRUCTION FUND:

REVENUES & BEG. CASH:	
Inter-governmental Revenues:	
Federal Grants	$5,372,959
Miscellaneous	69,460
Transfers-In	1,800,000
Non-Revenue Receipts	
Total From All Sources	
Other Than taxation	7,242,419
Beginning Cash and	
Investment Balance	4,980,039
TOTAL FROM ALL SOURCES	**$12,222,458**
EXPENDITURES & ENDING CASH:	
Other services & Charges	$1,050,000
Capital Outlays	8,690,553
Total Expenditures	9,740,553
Cash balance at End of Year	2,481,905
TOTAL EXPENDITURES AND ENDING CASH BALANCE	**$12,222,458**

CITY OF HATTIESBURG, MISSISSIPPI
A MUNICIPALITY
BUDGET OF ESTIMATED REVENUES AND EXPENDITURES
For the Fiscal Year Ending September 30, 2013

COMMUNITY CENTERS
SPECIAL REVENUE FUND:

REVENUES & BEG. CASH:	
Charges for services:	
Culture & Recreation	$30,000
Miscellaneous	200
Transfers-In	770,000
Non-Revenue Receipts	0
Total From All Sources Other Than taxation	800,200
Beginning Cash and Investment Balance	169,226
TOTAL FROM ALL SOURCES	**$969,426**
EXPENDITURES & ENDING CASH:	
Personnel	506,314
Supplies & Expenses	67,900
Other services & Charges	223,550
Capital Outlays	155,000
Total Expenditures	**$952,764**
Cash balance at End of Year	16,662
TOTAL EXPENDITURES AND ENDING CASH BALANCE	**$969,426**

CITY OF HATTIESBURG, MISSISSIPPI
A MUNICIPALITY
BUDGET OF ESTIMATED REVENUES AND EXPENDITURES
For the Fiscal Year Ending September 30, 2013

SERIES 2009 (Water Meter Project) Bond Construction Fund:

REVENUES & BEG. CASH:	
Proceeds from Bond Issue	0
Interest Earnings	0
Total Revenues	0
Beginning Cash and Investment Balance	49,718
TOTAL FROM ALL SOURCES	**$49,718**
EXPENDITURES & ENDING CASH:	
Supplies	
Other services & Charges	38,150
Capital Outlays	11,568
Total Expenditures	$49,718
Cash balance at End of Year	0
TOTAL EXPENDITURES AND ENDING CASH BALANCE	**$49,718**

CITY OF HATTIESBURG, MISSISSIPPI
A MUNICIPALITY
BUDGET OF ESTIMATED REVENUES AND EXPENDITURES
For the Fiscal Year Ending September 30, 2013

COMMUNITY DEVELOPMENT BLOCK GRANT SPECIAL REVENUE FUND:

REVENUES & BEG. CASH:

Federal Grants	$1,968,460
Transfers In	0
Total From All Sources Other Than taxation	1,968,460
Beginning Cash and Investment Balance	(17,528)
TOTAL FROM ALL SOURCES	**$1,950,932**

EXPENDITURES & ENDING CASH:

Personnel	229,589
Supplies & Expenses	7,900
Other services & Charges	541,619
Capital Outlays	1,171,824
Transfers	
Total Expenditures	$1,950,932
Cash balance at End of Year	0
TOTAL EXPENDITURES AND ENDING CASH BALANCE	**$1,950,932**

CITY OF HATTIESBURG, MISSISSIPPI
A MUNICIPALITY
BUDGET OF ESTIMATED REVENUES AND EXPENDITURES
For the Fiscal Year Ending September 30, 2013

SERIES 2012 WATER & SEWER REVENUE BOND
CONSTRUCTION FUND:

REVENUES & BEG. CASH:	
Interest Earnings	1,000
Proceeds from Revenue Bond Issue	
Total Revenues	1,000
Beginning Cash and	
Investment Balance	7,995,288
TOTAL FROM ALL SOURCES	**$7,996,288**
EXPENDITURES & ENDING CASH:	
Other services & Charges	
Capital Outlays	7,995,288
Transfers Out	
Total Expenditures	$7,995,288
Cash balance at End of Year	1,000
TOTAL EXPENDITURES AND ENDING CASH BALANCE	**$7,996,288**

CITY OF HATTIESBURG, MISSISSIPPI
A MUNICIPALITY
BUDGET OF ESTIMATED REVENUES AND EXPENDITURES
For the Fiscal Year Ending September 30, 2013

SERIES 2001 BOND CONSTRUCTION FUND:

REVENUES & BEG. CASH:

Interest Earnings	$0
Grant Revenues - State of MS	0
Transfers In	0
Proceeds from General Obligation Bond Issue	0
Total Revenues	0
Beginning Cash and Investment Balance	187,427
TOTAL FROM ALL SOURCES	**$187,427**

EXPENDITURES & ENDING CASH:

Other services & Charges	0
Capital Outlays	187,300
Transfers Out	0
Total Expenditures	**$187,300**
Cash balance at End of Year	127
TOTAL EXPENDITURES AND ENDING CASH BALANCE	**$187,427**

CITY OF HATTIESBURG, MISSISSIPPI
A MUNICIPALITY
BUDGET OF ESTIMATED REVENUES AND EXPENDITURES
For the Fiscal Year Ending September 30, 2013

MDB CAPITAL PROJECTS FUND:

REVENUES & BEG. CASH:

Proceeds from Develpment Bank Loans	$0
Grant Revenues - Federal	42,207
Grant Revenues - State of MS	0
Transfers In	0
Miscellaneous	0
Non-Revenue Receipts	
Total Revenues	42,207
Beginning Cash and Investment Balance	85,715
TOTAL FROM ALL SOURCES	**$127,922**

EXPENDITURES & ENDING CASH:

Other services & Charges	0
Capital Outlays	127,922
Total Expenditures	$127,922
Cash Balance at End of Year	0
TOTAL EXPENDITURES AND ENDING CASH BALANCE	**$127,922**

CITY OF HATTIESBURG, MISSISSIPPI
A MUNICIPALITY
BUDGET OF ESTIMATED REVENUES AND EXPENDITURES
For the Fiscal Year Ending September 30, 2013

KAMPER PARK ZOO CAPITAL
IMPROVEMENTS FUND:

REVENUES & BEG. CASH:	
State Grants	$0
Miscellaneous	0
Charges for Services	0
Transfers-In from Other Funds	0
Non-Revenue Receipts	0
Total Revenues	0
Beginning Cash and Investment Balance	86,097
TOTAL FROM ALL SOURCES	**$86,097**
EXPENDITURES & ENDING CASH:	
Supplies	0
Other services & Charges	0
Capital Outlays	86,097
Total Expenditures	$86,097
Cash balance at End of Year	0
TOTAL EXPENDITURES AND ENDING CASH BALANCE	**$86,097**

CITY OF HATTIESBURG, MISSISSIPPI
A MUNICIPALITY
BUDGET OF ESTIMATED REVENUES AND EXPENDITURES
For the Fiscal Year Ending September 30, 2013

SERIES 2010 WATER & SEWER BOND
CONSTRUCTION FUND:

REVENUES & BEG. CASH:	
Bond Proceeds	
Federal Grants	1,049,651
Interest Earnings	0
Total Revenues	1,049,651
Beginning Cash and Investment Balance	(181,292)
TOTAL FROM ALL SOURCES	**$868,359**
EXPENDITURES & ENDING CASH:	
Other services & Charges	0
Capital Outlays	868,299
Total Expenditures	$868,299
Cash balance at End of Year	60
TOTAL EXPENDITURES AND ENDING CASH BALANCE	**$868,359**

MEMORANDUM

TO: ***Mayor DuPree; Members of City Council***
FROM: ***Connie Everett, CFO***
DATE: ***November 6, 2012***
SUBJECT: ***Proposed Budget Amendments***

The amendments detailed below are necessary to adjust estimated beginning fund balances to the actual amounts, as well as to budget for open purchase orders carried from FY 2012, which will be paid in FY 2013. The amendments for the General Fund will be reflected as a change to the budgeted ending cash balance.

Budgeted Ending Cash		$2,270,959
Revenue Adjustments:		
Federal Grants	42,419	
State Grants	-3,295	
State Shared Revenue	125,754	
Miscellaneous	5,000	
Non-Revenue Receipts	567,112	
Adjust Beginning Cash to actual	231,301	968,291
Expenditure Adjustments:		
Council – software	-4,350	
City Court – prior year purchase order	-2,801	
Human Resources – background check fee	-3,200	
Loss Control – prior year purchase order	-217	
Urban Dev – prior year purchase orders	-3,876	
Info.Systems – prior year purchase order & Kronos	-435,904	
Gen.Govt.Bldg - prior year purchase order	-1,400	
Police – grant adjustment & radars for motorcycles	-57,051	
P/F Training – grant adjustments, prior yr purchase orders	-118,507	
Fire – prior year purchase order	-1,600	
Code Enforcement – prior year purchase orders	-2,822	
Traffic – prior year purchase order (bucket truck)	-85,173	
Streets – prior year purchase orders; mower purchase	-24,790	
Engineering – prior year purchase order	-8,947	
GOFS – prior year purchase order	-285	
Drainage – prior year purchase orders	-3,396	
Construction – prior year purchase order	-10,207	
Sanitation – prior year purchase order	-6,704	
Street Cleaning – prior year purchase order (sweeper)	-204,793	
Health – prior year purchase order	-1,106	
Debt Service – debt pmts for Kronos and street sweeper	-173,600	
Parking – prior year purchase order	-3,137	
Transfers – increase transfer to Community Ctrs budget	-20,000	1,173,866
Amended Budgeted Ending Cash		**$2,065,384**

Parks & Recreation Fund:	
Prior year purchase orders (tennis courts)	$ 39,789
Municipal Fire Protection Fund:	
Prior year purchase orders	$ 6,728
Water & Sewer O & M Fund:	
Prior year purchase orders (plant repairs and sewer truck)	$ 381,810
Police Forfeitures Fund:	
Adjust beginning cash	$ -965
Airport Improvement Fund:	
Adjust grant revenues and funds expended	$ -271,311
Municipal Road & Bridge Fund:	
Adjust grant revenues and funds expended	$ 214,941
Mass Transit Fund:	
Adjust budget for grant award	$ 598,049
Community Centers Fund:	
Adjust beginning cash and budget for planned renovation projects	$ -68,100
CDBG Fund:	
Adjust beginning cash	$ -23,136
Series 2009 Bond Construction (AMR Project) Fund:	
Adjust beginning cash	$ -150,282
MDB Construction Fund:	
Adjust beginning cash	$ 85,715
Kamper Park Improvements Fund:	
Adjust beginning cash	$ -13,903
Series 2012 Water & Sewer Bond Construction Fund:	
Adjust beginning cash and funds expended	$-1,111,122

If you should need further explanation of the above information, please give me a call.

RESOLUTION

WHEREAS, the Mayor and City Council of the City of Hattiesburg, Mississippi, have determined that expenditures within the City will exceed the original budget appropriation; and

WHEREAS, the additional appropriation needed is in excess of ten percent (10%) of the original appropriation, and in accordance with Section 21-35-25 of the Mississippi Code of 1972, as amended, shall be published;

NOW, THEREFORE, BE IT RESOLVED BY THE COUNCIL OF THE CITY OF HATTIESBURG:

Section 1. That the following budget amendments are hereby authorized to be made in the City's General Fund General Government Capital Outlay Unappropriated Fund Balance:

ORIGINAL BALANCE	CUMULATIVE AMENDMENTS	AMENDED BUDGET	DESCRIPTION OF ITEMS NOT PREVIOUSLY LISTED
$319,500	$440,254	$759,754	Budget for purchase orders carried from prior year and purchase of software

Section 2. That the following budget amendments are hereby authorized to be made in the City's General Fund Police/Fire Training Supplies Unappropriated Fund Balance:

ORIGINAL BALANCE	CUMULATIVE AMENDMENTS	AMENDED BUDGET	DESCRIPTION OF ITEMS NOT PREVIOUSLY LISTED
$146,368	$33,290	$179,658	Budget for purchase orders carried from prior year and grant allocation

Section 3. That the following budget amendments are hereby authorized to be made in the City's General Fund Police/Fire Training Capital Outlay Unappropriated Fund Balance:

ORIGINAL BALANCE	CUMULATIVE AMENDMENTS	AMENDED BUDGET	DESCRIPTION OF ITEMS NOT PREVIOUSLY LISTED
$ -0-	$74,694	$74,694	Budget for purchase orders carried from prior year

Section 4. That the following budget amendments are hereby authorized to be made in the City's General Fund Fire Capital Outlay Unappropriated Fund Balance:

ORIGINAL BALANCE	CUMULATIVE AMENDMENTS	AMENDED BUDGET	DESCRIPTION OF ITEMS NOT PREVIOUSLY LISTED
$ -0-	$23,000	$23,000	Reallocate funds for repairs to fire station driveway

Section 5. That the following budget amendments are hereby authorized to be made in the City's General Fund Public Services Capital Outlay Unappropriated Fund Balance:

ORIGINAL BALANCE	CUMULATIVE AMENDMENTS	AMENDED BUDGET	DESCRIPTION OF ITEMS NOT PREVIOUSLY LISTED
$1,030,845	$300,404	$1,331,249	Budget for purchase orders carried from prior year for bucket truck, street sweeper and purchase of mower

Section 6. That the following budget amendments are hereby authorized to be made in the City's Water & Sewer Operation & Maintenance Fund Capital Outlay Unappropriated Fund Balance:

ORIGINAL BALANCE	CUMULATIVE AMENDMENTS	AMENDED BUDGET	DESCRIPTION OF ITEMS NOT PREVIOUSLY LISTED
$122,500	$312,840	$435,340	Budget for purchase orders carried from prior year for sewer truck

Section 7. That the following budget amendments are hereby authorized to be made in the City's Mass Transit Fund Capital Outlay Unappropriated Fund Balance:

ORIGINAL BALANCE	CUMULATIVE AMENDMENTS	AMENDED BUDGET	DESCRIPTION OF ITEMS NOT PREVIOUSLY LISTED
$422,579	$598,049	$1,020,628	Budget grant award for purchase of buses

Section 8. That the following budget amendments are hereby authorized to be made in the City's Mississippi Development Bank Construction Fund Capital Outlay Unappropriated Fund Balance:

ORIGINAL BALANCE	CUMULATIVE AMENDMENTS	AMENDED BUDGET	DESCRIPTION OF ITEMS NOT PREVIOUSLY LISTED
$42,207	$85,715	$127,922	Adjust beginning cash and budget for capital projects

Section 9 . That public interest and necessity requiring same, this resolution shall become effective immediately from and after passage, but nevertheless to be published according to law.

The above and foregoing Resolution, after having been first reduced to writing, was introduced by Councilperson Delgado, seconded by Councilperson Naylor, and was adopted by the following, to wit;

YEAS: Bradley
Delgado
Carroll
Ware
Naylor

NAYS: None

The President thereby declared the motion carried and the Resolution adopted, this the 6th day of November, 2012.

(S E A L)

ATTEST:

CLERK OF COUNCIL

ADOPTED:

PRESIDENT

The above and foregoing Resolution having been submitted to and approved by the Mayor, this the 6th day of November, 2012.

ATTEST:

CITY CLERK

APPROVED:

MAYOR

CITY OF HATTIESBURG, MS. - GENERAL FUND
Analysis of Revenue and Expenditure Budgets
Fiscal Year Ending September 30, 2013

	Original FY 2013 Budgets	November Amend'ts	Amended Budgets
Revenues & Beg. Cash Balance:			
Taxes -Other	$28,000		$28,000
Licenses & Permits	4,440,000		4,440,000
Intergovernmental Revenues:			
Federal	718,771	42,419	761,190
State	278,420	-3,295	275,125
State-Shared	20,456,000	125,754	20,581,754
County/City Shared	66,000		66,000
Charges for Services:			
Public Safety	190,000		190,000
Streets	20,100		20,100
Sanitation	2,220,000		2,220,000
Misc.	0		0
Fines & Forf.	1,602,000		1,602,000
Misc. Revenues	200,350	5,000	205,350
Transfers-In	794,475		794,475
Non-Revenue Receipts	1,021,400	567,112	1,588,512
TOTAL REVENUES EXCLUSIVE OF			0
PROPERTY TAXES	$32,035,516	$736,990	$32,772,506
Beg. Fund Balance	4,600,000	231,301	4,831,301
Property Tax Levy	12,285,000	0	12,285,000
TOTAL AVAIL. REVENUES	**$48,920,516**	**$968,291**	**$49,888,807**
THE GENERAL FUND EXPENDITURE BUDGETS:			
City Council			
Personnel	$201,850		$201,850
Supplies & Expenses	3,400		3,400
Other Services & Charges	122,465		122,465
Capital Outlays	74,000	4,350	78,350
Total - City Council	$401,715	$4,350	$406,065
City Court			
Personnel	$957,552		$957,552
Supplies & Expenses	13,515		13,515
Other Services & Charges	141,418	2,801	144,219
Capital Outlays	0		0
Total - City Court	$1,112,485	$2,801	$1,115,286
Mayor/Admin.			
Personnel	$533,566		$533,566
Supplies & Expenses	12,900		12,900
Other Services & Charges	103,702		103,702
Capital Outlays	0		0
Total - Mayor/Admin.	$650,168	$0	$650,168
Elections			
Personnel	$0		$0
Supplies & Expenses	2,000		2,000
Other Services & Charges	56,000		56,000
Capital Outlays	0		0
Total - Elections	$58,000	$0	$58,000
Muni. Clerk			
Personnel	$155,351		$155,351
Supplies & Expenses	3,800		3,800
Other Services & Charges	34,695		34,695
Capital Outlays			0
Total - Muni Clerk	$193,846	$0	$193,846
Accounting			
Personnel	$271,881		$271,881
Supplies & Expenses	6,855		6,855
Other Services & Charges	2,075		2,075
Capital Outlays			0
Total - Accounting	$280,811	$0	$280,811
Purchasing			
Personnel	$134,382		$134,382
Supplies & Expenses	6,628		6,628
Other Services & Charges	900		900
Capital Outlays			0
Total - Purchasing	$141,910	$0	$141,910
City Attorney			
Personnel	$93,242		$93,242
Supplies & Expenses			0
Other Services & Charges	18,500		18,500
Capital Outlays			0
Total - City Attorney	$111,742	$0	$111,742
Human Resources			
Personnel	$196,129		$196,129
Supplies & Expenses	8,920		8,920
Other Services & Charges	4,640	3,200	7,840

CITY OF HATTIESBURG, MS. - GENERAL FUND
Analysis of Revenue and Expenditure Budgets
Fiscal Year Ending September 30, 2013

	Original FY 2013 Budgets	November Amend'ts	Amended Budgets
Capital Outlays			0
Total - Human Resources	$209,689	$3,200	$212,889
Loss Control			
Personnel	$104,729		$104,729
Supplies & Expenses	5,505	217	5,722
Other Services & Charges	4,845		4,845
Capital Outlays			0
Total - Loss Control	$115,079	$217	$115,296
Urban Development			
Personnel	$459,116		$459,116
Supplies & Expenses	26,960	1,514	28,474
Other Services & Charges	180,841	2,362	183,203
Capital Outlays	0		0
Total - Urban Dev.	$666,917	$3,876	$670,793
Information Systems			
Personnel	$384,354		$384,354
Supplies & Expenses	46,950		46,950
Other Services & Charges	272,150		272,150
Capital Outlays	245,000	435,904	680,904
Total - Inf. Systems	$948,454	$435,904	$1,384,358
Gen. Gov't Building			
Personnel			$0
Supplies & Expenses	27,035		27,035
Other Services & Charges	124,833	1,400	126,233
Capital Outlays			0
Total - Gen. Gov't Building	$151,868	$1,400	$153,268
Intermodal Facility (Depot) O & M:			
Personnel			$0
Supplies & Expenses	13,500		13,500
Other Services & Charges	124,340		124,340
Capital Outlays			0
Total - Depot O & M	$137,840	$0	$137,840
Metro Planning			
Personnel	$209,411		$209,411
Supplies & Expenses	6,300		6,300
Other Services & Charges	6,600		6,600
Capital Outlays	500		500
Total - Metro Planning	$222,811	$0	$222,811
Gen. Gov't Insurance/Other serv.			
Personnel	$3,171		$3,171
Supplies & Expenses	1,200		1,200
Other Services & Charges	1,734,168		1,734,168
Capital Outlays			0
Total - Gen. Gov't Insur/other Serv.	$1,738,539	$0	$1,738,539
Federal Programs Administration			
Personnel	$132,184		132,184
Supplies	9,170		9,170
Other Services & Charges	6,400		6,400
Capital Outlay	0		0
Total - Federal Programs Admin.	$147,754	$0	$147,754
Recap - General Government Cost Centers			
Personnel	***$3,836,918***	***$0***	***$3,836,918***
Supplies & Expenses	***$194,638***	***$1,731***	***$196,369***
Other Services & Charges	***$2,938,572***	***$9,763***	***$2,948,335***
Capital Outlays	***$319,500***	***$440,254***	***$759,754***
Total - Gen. Government	***$7,289,628***	***$451,748***	***$7,741,376***
Police			
Personnel	$9,150,415		$9,150,415
Supplies & Expenses	746,641		746,641
Other Services & Charges	484,291	5,000	489,291
Capital Outlays	564,440	52,051	616,491
Total - Police	$10,945,787	$57,051	$11,002,838
Police & Fire Training			
Personnel	$33,433		$33,433
Supplies & Expenses	146,368	33,290	179,658
Other Services & Charges	122,764	10,523	133,287
Capital Outlays	0	74,694	74,694
Total - Police & Fire Training	$302,565	$118,507	$421,072
Fire			
Personnel	$6,606,588		$6,606,588
Supplies & Expenses	368,855	-19,000	349,855
Other Services & Charges	317,095	-2,400	314,695
Capital Outlays	0	23,000	23,000

CITY OF HATTIESBURG, MS. - GENERAL FUND
Analysis of Revenue and Expenditure Budgets
Fiscal Year Ending September 30, 2013

	Original FY 2013 Budgets	November Amend'ts	Amended Budgets
Total - Fire Dept.	$7,292,538	$1,600	$7,294,138
Code Enforcement			
Personnel	$542,694		$542,694
Supplies & Expenses	31,397	672	32,069
Other Services & Charges	55,572	2,150	57,722
Capital Outlays	42,000		42,000
Total - Code Enforcement	$671,663	$2,822	$674,485
Contractual Services - Public Safety			
Personnel	$162,940		$162,940
Supplies & Expenses	0		0
Other Services & Charges	1,512,445		1,512,445
Capital Outlays			0
Total - Cont. Serv. - Public Safety	$1,675,385	$0	$1,675,385
Public Services Cost Centers:			
Traffic Maint.			
Personnel	$360,960		$360,960
Supplies & Expenses	137,544		137,544
Other Services & Charges	44,492		44,492
Capital Outlays	37,550	85,173	122,723
Total - Traffic Maint.	$580,546	$85,173	$665,719
Streets			
Personnel	$1,689,175		$1,689,175
Supplies & Expenses	466,250	11,536	477,786
Other Services & Charges	233,956	2,816	236,772
Capital Outlays	0	10,438	10,438
Total - Streets	$2,389,381	$24,790	$2,414,171
Street Lights			
Personnel			$0
Supplies & Expenses			0
Other Services & Charges	1,100,000		1,100,000
Capital Outlays			0
Total - Street Lights	$1,100,000	$0	$1,100,000
Engineering			
Personnel	$339,580		$339,580
Supplies & Expenses	19,200		19,200
Other Services & Charges	262,753	8,947	271,700
Capital Outlays	0		0
Total - Engineering	$621,533	$8,947	$630,480
Shop			
Personnel	$462,974		$462,974
Supplies & Expenses	47,675		47,675
Other Services & Charges	47,351		47,351
Capital Outlays	8,000		8,000
Total - Shop	$566,000	$0	$566,000
GOFS			
Personnel	$314,650		$314,650
Supplies & Expenses	16,600	285	16,885
Other Services & Charges	24,535		24,535
Capital Outlays	5,945		5,945
Total - GOFS	$361,730	$285	$362,015
Drainage			
Personnel	$170,878		$170,878
Supplies & Expenses	74,330	3,396	77,726
Other Services & Charges	436,000		436,000
Capital Outlays	934,850		934,850
Total - Drainage	$1,616,058	$3,396	$1,619,454
Construction			
Personnel	$646,819		$646,819
Supplies & Expenses	140,634		140,634
Other Services & Charges	106,035	10,207	116,242
Capital Outlays	44,500		44,500
Total - Construction	$937,988	$10,207	$948,195
Sanitation			
Personnel	$1,278,299		$1,278,299
Supplies & Expenses	341,350	6,704	348,054
Other Services & Charges	954,865		954,865
Capital Outlays	0		0
Total - Sanitation	$2,574,514	$6,704	$2,581,218
Street Cleaning			
Personnel	$63,720		$63,720
Supplies & Expenses	24,800		24,800
Other Services & Charges	11,100		11,100
Capital Outlays	0	204,793	204,793

CITY OF HATTIESBURG, MS. - GENERAL FUND
Analysis of Revenue and Expenditure Budgets
Fiscal Year Ending September 30, 2013

	Original FY 2013 Budgets	November Amend'ts	Amended Budgets
Total - Street Cleaning	$99,620	$204,793	$304,413
Health			
Personnel	$405,904		$405,904
Supplies & Expenses	143,900	1,106	145,006
Other Services & Charges	8,650		8,650
Capital Outlays	0		0
Total - Health	$558,454	$1,106	$559,560
Recap - Public Services:			
Personnel	***$5,732,959***	***$0***	***$5,732,959***
Supplies & Expenses	***$1,412,283***	***23,027***	***1,435,310***
Other Services & Charges	***$3,229,737***	***21,970***	***3,251,707***
Capital Outlays	***$1,030,845***	***300,404***	***1,331,249***
Total - Public Services	***$11,405,824***	***$345,401***	***$11,751,225***
Animal Control			
Personnel	$126,599		$126,599
Supplies & Expenses	23,950		23,950
Other Services & Charges	123,073		123,073
Capital Outlays	0		0
Total - Animal Control	$273,622	$0	$273,622
Human/Social Assist.			
Personnel			$0
Supplies & Expenses			0
Other Services & Charges	159,500		159,500
Capital Outlays			0
Total - Human/Social Assist.	$159,500	$0	$159,500
Economic Dev.			
Personnel			$0
Supplies & Expenses			0
Other Services & Charges	160,000		160,000
Capital Outlays			0
Total - Economic Dev.	$160,000	$0	$160,000
Debt Service			
Principal	$1,741,550	$162,000	$1,903,550
Interest	191,175	$11,600	$202,775
Total Debt Service	$1,932,725	$173,600	$2,106,325
Airport			
Personnel	$96,630		$96,630
Supplies & Expenses	56,198		56,198
Other Services & Charges	72,975		72,975
Capital Outlays	0		0
Total - Airport	$225,803	$0	$225,803
Cemetery			
Personnel	$613,452		$613,452
Supplies & Expenses	89,350		89,350
Other Services & Charges	53,350		53,350
Capital Outlays	79,500		79,500
Total - Cemetery	$835,652	$0	$835,652
Parking Garages			
Personnel	$191,979		$191,979
Supplies & Expenses	7,250		7,250
Other Services & Charges	82,402	3,137	85,539
Capital Outlays	10,000		10,000
Total - Parking Garages	$291,631	$3,137	$294,768
Transfers to Other Funds	$3,187,234	20,000	$3,207,234
EXPENDITURES & TRANSFERS	**$46,649,557**	**$1,173,866**	**$47,823,423**
Recap - General Fund			
Personnel	*$27,094,607*	*$0*	*$27,094,607*
Supplies & Expenses	*3,076,930*	*39,720*	*3,116,650*
Other Services & Charges	*9,311,776*	*50,143*	*9,361,919*
Capital Outlays	*2,046,285*	*890,403*	*2,936,688*
Principal Payments	*1,741,550*	*162,000*	*1,903,550*
Interest Payments	*191,175*	*11,600*	*202,775*
Total - Gen. Fund Cost Centers	*$43,462,323*	*$1,153,866*	*$44,616,189*
Transfers to Other Funds	*3,187,234*	*20,000*	*3,207,234*
Total - Expenditures & Transfers	*$46,649,557*	*$1,173,866*	*$47,823,423*
Ending Cash Budget	**$2,270,959**	**-$205,575**	**$2,065,384**

CITY OF HATTIESBURG, MS - GENERAL FUND
Analysis of Expenditure Budgets - Funds Other Than General
Fiscal Year Ending September 30, 2013

	Original FY 2013 Budgets	Nov. Amend'ts	Amended Budgets
Parks & Recreation (Fund #2):			
Recreation Maint. Cost Center			
Personnel	$1,082,984		$1,082,984
Supplies & Expenses	357,446		357,446
Other Services & Charges	189,170	2,089	191,259
Capital Outlays	489,000	35,890	524,890
Total - Recreation Maint.	$2,118,600	$37,979	$2,156,579
Recreation Admin.			
Personnel	$469,918		$469,918
Supplies & Expenses	98,680	1,810	100,490
Other Services & Charges	456,884		456,884
Capital Outlays	0		0
Total - Recreation Admin.	$1,025,482	$1,810	$1,027,292
Kamper Park Zoo			
Personnel			$0
Supplies & Expenses			0
Other Services & Charges			0
Capital Outlays			0
Total - Kamper Park	$0	$0	$0
Recap - Parks & Recreation Fund:			
Personnel	***$1,552,902***	***$0***	***$1,552,902***
Supplies & Expenses	***456,126***	***1,810***	***457,936***
Other Services & Charges	***646,054***	***2,089***	***648,143***
Capital Outlays	***489,000***	***35,890***	***524,890***
Total - Recreation Maint.	***$3,144,082***	***$39,789***	***$3,183,871***
Municipal Fire Protection (Fund #5):			
Personnel			$0
Supplies & Expenses	72,000		72,000
Other Services & Charges	44,500		44,500
Capital Outlays	423,761	6,728	430,489
Principal Payments	148,560		148,560
Interest Payments	23,540		23,540
Total - Municipal Fire Prot. Fun	***$712,361***	***$6,728***	***$719,089***
Special Streets (Fund #8):			
Personnel			$0
Supplies & Expenses			0
Other Services & Charges			0
Capital Outlays	261,000		261,000
Total - Special Streets	***$261,000***	***$0***	***$261,000***
Water & Sewer Operation & Maint. (Fund #9):			
Customer Accounts Cost Center			
Personnel	$231,808	$159,912	$391,720
Supplies & Expenses	7,968	13,000	20,968
Other Services & Charges	121,730	12,300	134,030
Capital Outlays	0	8,000	8,000
Total - Customer Accounts	$361,506	$193,212	$554,718
Water Transmission Cost Center			
Personnel	$897,533	-$159,912	$737,621
Supplies & Expenses	182,600	-10,000	172,600
Other Services & Charges	550,500		550,500
Capital Outlays	40,000		40,000
Total - Water Trans.	$1,670,633	-$169,912	$1,500,721
Plant Cost Center			
Personnel	$554,776		$554,776
Supplies & Expenses	168,450	697	169,147
Other Services & Charges	941,510	44,854	986,364
Capital Outlays	19,500		19,500
Total - Plant	$1,684,236	$45,551	$1,729,787
Sewer Cost Center			
Personnel	$686,706		$686,706
Supplies & Expenses	259,500		259,500
Other Services & Charges	937,250	719	937,969
Capital Outlays	3,000	304,840	307,840
Total - Water Trans.	$1,886,456	$305,559	$2,192,015
Lagoon Cost Center			
Personnel	$258,485		$258,485
Supplies & Expenses	376,800		376,800
Other Services & Charges	1,722,400	7,400	1,729,800
Capital Outlays	60,000		60,000
Principal Payments			0
Interest Payments			0
Total - Lagoon Cost Center	$2,417,685	$7,400	$2,425,085
Recap: Water & Sewer O & M Fund:			
Personnel	***$2,629,308***	***$0***	***$2,629,308***
Supplies & Expenses	***995,318***	***3,697***	***999,015***
Other Services & Charges	***4,273,390***	***65,273***	***4,338,663***
Capital Outlays	***122,500***	***312,840***	***435,340***

CITY OF HATTIESBURG, MS - GENERAL FUND
Analysis of Expenditure Budgets - Funds Other Than General
Fiscal Year Ending September 30, 2013

	Original FY 2013 Budgets	Nov. Amend'ts	Amended Budgets
Principal Payments	*0*	*0*	*0*
Interest Payments	*0*	*0*	*0*
Total - Water & Sewer O & M Fu	***$8,020,516***	***$381,810***	***$8,402,326***
Water & Sewer Bond & Int. (Fund #10):			
Principal Payments	$2,070,000		$2,070,000
Interest Payments	$1,240,325		$1,240,325
Paying Agent Fees	$2,500		$2,500
Total - W & S Bond & Int. Fund	***$3,312,825***	***$0***	***$3,312,825***
Water & Sewer Revenue (Fund #11):			
Principal Payments	$463,210		$463,210
Interest Payments	81,660		81,660
other services & charges	22,400		22,400
Transfers to other funds	14,199,230		14,199,230
Total - W & S Revenue Fund	***$14,766,500***	***$0***	***$14,766,500***
1999 Tax Increment (Walmart) Bond & Int (Fund #12):			
Principal Payments	$55,000		$55,000
Interest Payments	9,200		9,200
Paying Agent Fees	2,000		2,000
Total - 1999 TIF Bond & Int Fund	***$66,200***	***0***	***$66,200***
City Bond & Interest (Fund #13):			
Principal Payments	$3,290,730		$3,290,730
Interest Payments	636,613		636,613
Other Services & Charges	116,759		116,759
Paying Agent Fees	15,000		15,000
Total - 1999 TIF Bond & Int Fund	***$4,059,102***	***$0***	***$4,059,102***
USA Yeast Bond & Interest (Fund #15):			
Principal Payments	$385,000	$0	$385,000
Interest Payments	23,100	0	23,100
other services & charges	5,000		5,000
Total - 1999 TIF Bond & Int Fund	***$413,100***	***0***	***$413,100***
Police Fines & Forfeitures (Fund #19):			
Personnel			$0
Supplies & Expenses	145,400	1,839	147,239
Other Services & Charges	30,000	-2,804	27,196
Capital Outlays	74,600		74,600
Transfers			0
Total - Fines & Forf. Fund	***$250,000***	***-$965***	***$249,035***
Series 2002 TIF Bond & Int (Southern Pointe, Fund #20):			
Principal Payments	$85,000		$85,000
Interest Payments	3,825		3,825
other services & charges	1,250		1,250
Total - 1999 TIF Bond & Int Fund	***$90,075***	***0***	***$90,075***
Series 2004 TIF Bond & Int (Home Depot, Fund #21):			
Principal Payments	$75,000		$75,000
Interest Payments	8,345		8,345
other services & charges	1,000		1,000
Total - 2004 TIF Bond & Int Fund	***$84,345***	***0***	***$84,345***
Series 2003 TIF Bond & Int (Chauvet Sq., Fund #22):			
Principal Payments	$95,000		$95,000
Interest Payments	97,210		97,210
other services & charges	2,000		2,000
Transfers to other Funds			0
Total - 2003 TIF Bond & Int Fund	***$194,210***	***$0***	***$194,210***
Series 2007 TIFBond & Int (Turtle Creek Fund 23):			
Principal Payments	285,000		285,000
Interest Payments	149,776		149,776
Other Services & Charges	5,000		5,000
Total - 2007 TIF Bond & Int Fund	***$439,776***		***$439,776***
Series 2008 TIF Bond & Int (Lincoln Center Fund 24):			
Principal Payments	$35,000		35,000
Interest Payments	$18,700		18,700
Other Services & Charges	$1,000		1,000
Total - 2008 TIF Bond & Int Fund	***$54,700***	***$0***	***$54,700***
Series 2011 TIF Bond & Int (Turtle Creek Commons/Kohl's Fund 25):			
Principal Payments	$60,000		60,000
Interest Payments	$32,000		32,000
Other Services & Charges	$1,000		1,000
Total - 2008 TIF Bond & Int Fund	***$93,000***	***$0***	***$93,000***
Airport Imp. (Fund #39):			
Personnel	$0		$0
Supplies & Expenses	0		0
Other Services & Charges	0		0
Capital Outlays	1,413,440	-271,311	1,142,129
Total - Airport Imp. Fund	***$1,413,440***	***-$271,311***	***$1,142,129***

CITY OF HATTIESBURG, MS - GENERAL FUND
Analysis of Expenditure Budgets - Funds Other Than General
Fiscal Year Ending September 30, 2013

	Original FY 2013 Budgets	Nov. Amend'ts	Amended Budgets
2009 Gen.Oblig.Refunding Bonds (Fund #50)			
Bonds Redeemed			0
Interest on Bonds			0
Paying Agent Fees			0
Other Services & Charges			0
Total - 2007 G.O.Refunding	0	0	0
Municipal Road & Bridge (Fund #72):			
Personnel			$0
Supplies & Expenses	225,000		225,000
Other Services & Charges	666,000	41,650	707,650
Capital Outlays	9,071,294	173,291	9,244,585
Principal	24,293		24,293
Interest	5,690		5,690
Total - Municipal Road & Bridg	***$9,992,277***	***$214,941***	***$10,207,218***
Mass Transit (Fund #73):			
Personnel	$590,784		$590,784
Supplies & Expenses	224,300		224,300
Other Services & Charges	169,900		169,900
Capital Outlays	422,579	598,049	1,020,628
Total - Mass Transit Fund	***$1,407,563***	***$598,049***	***$2,005,612***
Water & Sewer Construction (Fund #75):			
Personnel			$0
Supplies & Expenses			0
Other Services & Charges	1,050,000		1,050,000
Capital Outlays	8,690,553		8,690,553
Total - W & S Construction Fun	***$9,740,553***	***$0***	***$9,740,553***
Community Centers (Fund #77):			
Personnel	$506,314		$506,314
Supplies & Expenses	67,900		67,900
Other Services & Charges	263,150	-39,600	223,550
Capital Outlays	183,500	-28,500	155,000
Total - Community Centers Fun	***$1,020,864***	***-$68,100***	***$952,764***
Series 2009 G.O. Bonds - AMR Project (Fund #78)			
Supplies			0
Other Services & Charges	$100,000	***-$61,850***	38,150
Capital Outlay	100,000	***-$88,432***	11,568
Total - Series 2009 G.O. Bonds	***$200,000***	***-$150,282***	***$49,718***
Community Dev. Block Grant (Fund #82):			
Personnel	$229,589		$229,589
Supplies & Expenses	7,900		7,900
Other Services & Charges	564,755	-23,136	541,619
Capital Outlays	1,171,824		1,171,824
Transfers			0
Total - CDBG Fund	***$1,974,068***	***-$23,136***	***$1,950,932***
Series 2002 TIF (Southern Pointe) Construction (Fund # 88):			
Personnel	$0		$0
Supplies & Expenses	0		0
Other Services & Charges	0		0
Capital Outlays	0		0
Transfers to other Funds			0
Total - Series 2002 Const. Fun	***$0***	***$0***	***$0***
Series 2004 TIF (Home Depot) Construction (Fund # 89):			
Personnel	$0		$0
Supplies & Expenses	0		0
Other Services & Charges	0		0
Capital Outlays	0		0
Transfers	0		0
Total - Series 2004 Const. Fun	***$0***	***$0***	***$0***
Series 2008 G.O. Note (Downtown Lighting)(Fund # 90):			
Personnel	$0		$0
Supplies & Expenses	0		0
Other Services & Charges	0		0
Capital Outlays			0
Transfers	0		0
Total - Series 2004 Const. Fun	***$0***	***$0***	***$0***
TIF (Turtle Creek) Construction (Fund # 91):			
Personnel	$0		$0
Supplies & Expenses	0		0
Other Services & Charges	0		0
Capital Outlays	0		0
Transfers	0		0
Total - Series 2004 Const. Fun	***$0***	***$0***	***$0***
Series 2001 G.O. Bond Construction (Fund # 95):			
Personnel	$0		$0
Supplies & Expenses	0		0

CITY OF HATTIESBURG, MS - GENERAL FUND
Analysis of Expenditure Budgets - Funds Other Than General
Fiscal Year Ending September 30, 2013

	Original FY 2013 Budgets	Nov. Amend'ts	Amended Budgets
Other Services & Charges	0		0
Capital Outlays	187,300		187,300
Transfers	0		0
Total - Series 2001 Const. Fun	***$187,300***	***$0***	***$187,300***
Mississippi Dev. Bank Construction (Fund # 96):			
Personnel	$0		$0
Supplies & Expenses	0		0
Other Services & Charges			0
Capital Outlays	42,207	85,715	127,922
Total - MDB Fund	***$42,207***	***$85,715***	***$127,922***
Kamper Park Imp. (Fund #98):			
Personnel	$0		$0
Supplies & Expenses	0		0
Other Services & Charges	0		0
Capital Outlays	100,000	-13,903	86,097
Total - Kamper Park Imp. Fund	***$100,000***	***-$13,903***	***$86,097***
Series 2010 Water & Sewer G.O. Constr. (Fund #99):			
Personnel			
Supplies & Expenses			
Other Services & Charges			0
Capital Outlay	$868,299		868,299
Total - Series 2010 Constr.	***$868,299***	***$0***	***$868,299***
Series 2012 Water & Sewer Const. (Fund #94):			
Personnel	$0		$0
Supplies & Expenses	0		0
Other Services & Charges	0		0
Capital Outlays	9,106,410	-1,111,122	7,995,288
Transfers Out	0		0
Total - Series 2006 Const.	***$9,106,410***	***-$1,111,122***	***$7,995,288***
GRAND TOTAL - FUNDS OTHER THAN THE GENERAL FUND	$72,014,773	-$311,787	$71,702,986
General Fund	$46,649,557	$1,173,866	$47,823,423
TOTAL EXPENDITURES & TRANS	$118,664,330	$862,079	$119,526,409
Less: Interfund Transfers	-17,386,464	-20,000	-17,406,464
TOTAL EXPENDITURES	$101,277,866	$842,079	$102,119,945
Recap of City-Wide Expenditure Budgets:			
Personnel	***$32,603,504***	***$0***	***$32,603,504***
Supplies & Expenses	***$5,270,874***	***$47,066***	***$5,317,940***
Other Services & Charges	***$17,294,434***	***$31,765***	***$17,326,199***
Capital Outlays	***$34,774,552***	***$589,648***	***$35,364,200***
Principal Payments	***8,813,343***	***162,000***	***8,975,343***
Interest Payments	***2,521,159***	***11,600***	***2,532,759***
Total Expenditure Budgets	***$101,277,866***	***$842,079***	***$102,119,945***

CITY OF HATTIESBURG, MISSISSIPPI
A MUNICIPALITY
BUDGET OF ESTIMATED REVENUES AND EXPENDITURES
For the Fiscal Year Ending September 30, 2013

GENERAL FUND:

REVENUES & BEG. CASH:	
Taxes - Other	$28,000
Licenses & Permits	4,440,000
Inter-governmental Revenues:	
Federal Grants	761,190
State Grants	275,125
State-Shared Revenues	20,581,754
County Shared Revenues	66,000
Charges for Services:	
Public safety	190,000
Streets	20,100
Sanitaiton	2,220,000
Misc.	0
Fines & Forfeits	1,602,000
Miscellaneous	205,350
Transfers-In	794,475
Non-Revenue Receipts	1,588,512
Total From All Sources Other Than taxation	32,772,506
Beginning Cash and Investment Balance	4,831,301
Amount to be Raised by Tax Levy	12,285,000
TOTAL FROM ALL SOURCES	**$49,888,807**

EXPENDITURES & ENDING CASH:

General Government:	
Personnel	3,836,918
Supplies & Expenses	196,369
Other services & Charges	2,948,335
Capital Outlays	759,754
Total - General Government	7,741,376
Police Dept.:	
Personnel	9,150,415
Supplies & Expenses	746,641
Other services & Charges	489,291
Capital Outlays	616,491
Total - Police Dept.	11,002,838
Police & Fire Training:	
Personnel	33,433
Supplies & Expenses	179,658
Other services & Charges	133,287
Capital Outlays	74,694
Total - Police & Fire Training	421,072
Fire Dept.:	
Personnel	6,606,588
Supplies & Expenses	349,855
Other services & Charges	314,695
Capital Outlays	23,000
Total - Fire Dept.	7,294,138
Land Development Administration:	
Personnel	542,694
Supplies & Expenses	32,069
Other services & Charges	57,722
Capital Outlays	42,000
Total - Land Dev. Admin.	674,485

Public Safety Contractual Services:	
Personnel	162,940
Other services & Charges	1,512,445
Total - Pub. Safety Cont. Serv.	1,675,385
Public Services:	
Personnel	5,732,959
Supplies & Expenses	1,435,310
Other services & Charges	3,251,707
Capital Outlays	1,331,249
Total - Public Services	11,751,225
Animal Control	
Personnel	126,599
Supplies & Expenses	23,950
Other services & Charges	123,073
Capital Outlays	0
Total - Animal Control	273,622
Human/Social	
Other services & Charges	159,500
Total - Human/Social	159,500
Economic Development	
Personnel	
Supplies & Expenses	
Other services & Charges	160,000
Capital Outlays	0
Total - Eco. Dev.	160,000
Debt Service:	
Prinicpal Payments	1,903,550
Interest Payments	202,775
Total - Debt service	2,106,325
Airport	
Personnel	96,630
Supplies & Expenses	56,198
Other services & Charges	72,975
Capital Outlays	0
Total - Airport	225,803
Cemetery	
Personnel	613,452
Supplies & Expenses	89,350
Other services & Charges	53,350
Capital Outlays	79,500
Total - Cemetery	835,652
Parking Garages	
Personnel	191,979
Supplies & Expenses	7,250
Other services & Charges	85,539
Capital Outlays	10,000
Total - Parking Garages	294,768
Operating Transfers Out	3,207,234
Total Expenditures & Transfers	**47,823,423**
Ending Cash Balance	**$2,065,384**
TOTAL EXPENDITURES AND ENDING CASH BALANCE	**$49,888,807**

CITY OF HATTIESBURG, MISSISSIPPI
A MUNICIPALITY
BUDGET OF ESTIMATED REVENUES AND EXPENDITURES
For the Fiscal Year Ending September 30, 2013

PARKS & RECREATION FUND:

REVENUES & BEG. CASH:

Inter-governmental Revenues:	
Federal Grants	$0
State Grants	0
County Shared Revenues	62,603
Misc. grants	0
Charges for Services:	
Culture & Recreation	40,400
Miscellaneous	80,400
Transfers-In	2,102,234
Non-Revenue Receipts	
Total From All Sources Other Than taxation	2,285,637
Beginning Cash and Investment Balance	203,436
Amount to be Raised by Tax Levy	800,000
TOTAL FROM ALL SOURCES	**$3,289,073**

EXPENDITURES & ENDING CASH:

Culture & Recreation:	
Personnel	1,552,902
Supplies & Expenses	457,936
Other services & Charges	648,143
Capital Outlays	524,890
Total Expenditures	$3,183,871
Cash balance at End of Year	105,202
TOTAL EXPENDITURES AND ENDING CASH BALANCE	**$3,289,073**

CITY OF HATTIESBURG, MISSISSIPPI
A MUNICIPALITY
BUDGET OF ESTIMATED REVENUES AND EXPENDITURES
For the Fiscal Year Ending September 30, 2013

MUNICIPAL FIRE PROTECTION FUND:

REVENUES & BEG. CASH:	
Inter-governmental Revenues:	
State-Shared Revenues	$235,000
Charges for Services	95,652
Fines & Forfeits	1,500
Miscellaneous	10,500
Transfers In	0
Non-Revenue Receipts	0
Total From All Sources Other Than taxation	342,652
Beginning Cash and Investment Balance	764,097
TOTAL FROM ALL SOURCES	**$1,106,749**

EXPENDITURES & ENDING CASH:	
Public Safety:	
Personnel	$0
Supplies & Expenses	72,000
Other services & Charges	44,500
Capital Outlays	430,489
Lease Debt Service - Principal	148,560
Lease Debt Service - Interest	23,540
Total Expenditures	$719,089
Cash balance at End of Year	387,660
TOTAL EXPENDITURES AND ENDING CASH BALANCE	**$1,106,749**

CITY OF HATTIESBURG, MISSISSIPPI
A MUNICIPALITY
BUDGET OF ESTIMATED REVENUES AND EXPENDITURES
For the Fiscal Year Ending September 30, 2013

SPECIAL STREET
SPECIAL REVENUE FUND:

REVENUES & BEG. CASH:	
Inter-governmental Revenues:	
Federal Grants	$0
State Shared Revenues	55,000
Misc. grants	0
Miscellaneous	1,000
Non-Revenue Receipts	0
Total From All Sources Other Than taxation	56,000
Beginning Cash and Investment Balance	205,903
TOTAL FROM ALL SOURCES	**$261,903**
EXPENDITURES & ENDING CASH:	
Public Services:	
Supplies & Expenses	0
Other services & Charges	0
Capital Outlays	261,000
Total Expenditures	$261,000
Cash balance at End of Year	903
TOTAL EXPENDITURES AND ENDING CASH BALANCE	**$261,903**

CITY OF HATTIESBURG, MISSISSIPPI
A MUNICIPALITY
BUDGET OF ESTIMATED REVENUES AND EXPENDITURES
For the Fiscal Year Ending September 30, 2013

WATER & SEWER OPERATION AND MAINTENANCE FUND:

REVENUES & BEG. CASH:	
Charges for Services	$20,000
Transfers-In	7,972,295
Miscellaneous	3,000
Non-Revenue Receipts	
Total From All Sources Other Than taxation	7,995,295
Beginning Cash and Investment Balance	760,401
TOTAL FROM ALL SOURCES	**$8,755,696**
EXPENDITURES & ENDING CASH:	
Personnel	2,629,308
Supplies & Expenses	999,015
Other services & Charges	4,338,663
Capital Outlays	435,340
Lease Debt Service - Principal	0
Lease Debt Service - Interest	0
Total Expenditures	$8,402,326
Cash balance at End of Year	353,370
TOTAL EXPENDITURES AND ENDING CASH BALANCE	**$8,755,696**

CITY OF HATTIESBURG, MISSISSIPPI
A MUNICIPALITY
BUDGET OF ESTIMATED REVENUES AND EXPENDITURES
For the Fiscal Year Ending September 30, 2013

WATER & SEWER BOND AND INTEREST FUND:

REVENUES & BEG. CASH:	
Transfers-In	$3,684,460
Miscellaneous	0
Non-Revenue Receipts	
Total Revenues	3,684,460
Beginning Cash Balance	1,652,040
TOTAL FROM ALL SOURCES	**$5,336,500**
EXPENDITURES & ENDING CASH:	
Bonds Redeemed	2,070,000
Interest on Bonds	1,240,325
Paying Agent Fees	2,500
Total Expenditures	**3,312,825**
Cash balance at End of Year	2,023,675
TOTAL EXPENDITURES AND ENDING CASH BALANCE	**$5,336,500**

CITY OF HATTIESBURG, MISSISSIPPI
A MUNICIPALITY
BUDGET OF ESTIMATED REVENUES AND EXPENDITURES
For the Fiscal Year Ending September 30, 2012

WATER & SEWER ENTERPRISE FUND:

REVENUES & BEG. CASH:	
Charges for Services:	
Licenses, Permits & Fees	$5,000
Miscellaneous	2,500
Metered Water Sales	8,075,000
Taps	115,000
Water Turn-On Fees	64,000
Sewer Connections	15,000
Sewer Charges	6,490,000
Total Revenues	14,766,500
Beginning Fund Balance	0
TOTAL FROM ALL SOURCES	**$14,766,500**
EXPENDITURES & ENDING CASH:	
Other Services & Charges	22,400
Principal Redeemed - Notes	463,210
Interest on Notes	81,660
Operating Transfers Out	14,199,230
Total Expenditures	**$14,766,500**
Cash balance at End of Year	**$0**
TOTAL EXPENDITURES AND ENDING CASH BALANCE	**$14,766,500**

CITY OF HATTIESBURG, MISSISSIPPI
A MUNICIPALITY
BUDGET OF ESTIMATED REVENUES AND EXPENDITURES
For the Fiscal Year Ending September 30, 2013

1999 TAX INCREMENT BOND & INTEREST FUND (DEBT SERVICE FUND):

REVENUES & BEG. CASH:	
Interest	$0
County-Shared Revenues	0
Total From All Sources Other Than taxation	0
Beginning Cash and Investment Balance	72,175
Amount to be Raised by Tax Levy	66,188
TOTAL FROM ALL SOURCES	**$138,363**
EXPENDITURES & ENDING CASH:	
General Issues:	
Bonds Redeemed	55,000
Interest on Bonds	9,200
Paying Agent Fees	2,000
Other Services & Charges	
Total Expenditures	$66,200
Cash balance at End of Year	72,163
TOTAL EXPENDITURES AND ENDING CASH BALANCE	**$138,363**

CITY OF HATTIESBURG, MISSISSIPPI
A MUNICIPALITY
BUDGET OF ESTIMATED REVENUES AND EXPENDITURES
For the Fiscal Year Ending September 30, 2013

CITY BOND & INTEREST FUND (DEBT SERVICE FUND):

REVENUES & BEG. CASH:	
County-Shared Revenues	$63,617
Interest	2,000
Non-Revenue receipts	218,850
Transfers-In	399,330
Total From All Sources Other Than taxation	683,797
Beginning Cash and Investment Balance	3,040,036
Amount to be Raised by Tax Levy	2,800,000
TOTAL FROM ALL SOURCES	**$6,523,833**
EXPENDITURES & ENDING CASH:	
General Issues:	
Bonds Redeemed	3,290,730
Interest on Bonds	636,613
Other Services & Charges	131,759
Paying Agent Fees	
Total Expenditures	$4,059,102
Cash balance at End of Year	2,464,731
TOTAL EXPENDITURES AND ENDING CASH BALANCE	**$6,523,833**

CITY OF HATTIESBURG, MISSISSIPPI
A MUNICIPALITY
BUDGET OF ESTIMATED REVENUES AND EXPENDITURES
For the Fiscal Year Ending September 30, 2013

Water & Sewer Bond & Interest Fund (USA Yeast Project):

REVENUES & BEG. CASH:	
Interest	$200
Transfer from Other Funds	310,000
Total From All Sources Other Than taxation	310,200
Beginning Cash and Investment Balance	141,841
TOTAL FROM ALL SOURCES	**$452,041**
EXPENDITURES & ENDING CASH:	
General Issues:	
Bonds Redeemed	$385,000
Interest on Bonds	23,100
Other Services & Charges	5,000
Total Expenditures	$413,100
Cash balance at End of Year	38,941
TOTAL EXPENDITURES AND ENDING CASH BALANCE	**$452,041**

CITY OF HATTIESBURG, MISSISSIPPI
A MUNICIPALITY
BUDGET OF ESTIMATED REVENUES AND EXPENDITURES
For the Fiscal Year Ending September 30, 2013

FINES & FORFEITURES FUND:

REVENUES & BEG. CASH:	
State grants	
Charges for Services	
Fines & Forfeits	
Miscellaneous	0
Non-Revenue Receipts	0
Total From All Sources Other Than taxation	0
Beginning Cash and Investment Balance	247,196
TOTAL FROM ALL SOURCES	**$247,196**
EXPENDITURES & ENDING CASH:	
Public Safety:	
Personnel	0
Supplies & Expenses	145,400
Other services & Charges	27,196
Capital Outlays	74,600
Transfers Out	
Total Expenditures	$247,196
Cash balance at End of Year	0
TOTAL EXPENDITURES AND ENDING CASH BALANCE	**$247,196**

CITY OF HATTIESBURG, MISSISSIPPI
A MUNICIPALITY
BUDGET OF ESTIMATED REVENUES AND EXPENDITURES
For the Fiscal Year Ending September 30, 2013

SERIES 2002 TIF BOND & INTEREST FUND (Southern Pointe Project):

REVENUES & BEG. CASH:	
Interest	$0
County-Shared Revenues	39,294
Total From All Sources Other Than taxation	39,294
Beginning Cash and Investment Balance	64,724
Amount to be Raised by Tax Levy	50,181
TOTAL FROM ALL SOURCES	**$154,199**
EXPENDITURES & ENDING CASH:	
General Issues:	
Bonds Redeemed	85,000
Interest on Bonds	3,825
Other Services & Charges	1,250
Total Expenditures	**$90,075**
Cash balance at End of Year	64,124
TOTAL EXPENDITURES AND ENDING CASH BALANCE	**$154,199**

CITY OF HATTIESBURG, MISSISSIPPI
A MUNICIPALITY
BUDGET OF ESTIMATED REVENUES AND EXPENDITURES
For the Fiscal Year Ending September 30, 2013

SERIES 2004 TIF BOND & INTEREST FUND (Home Depot Project):

REVENUES & BEG. CASH:	
Interest	$100
County-Shared Revenues	26,184
Transfer From Other Funds	0
Total From All Sources Other Than taxation	26,284
Beginning Cash and Investment Balance	123,263
Amount to be Raised by Tax Levy	58,360
TOTAL FROM ALL SOURCES	**$207,907**
EXPENDITURES & ENDING CASH:	
General Issues:	
Bonds Redeemed	75,000
Interest on Bonds	8,345
Other Services & Charges	1,000
Total Expenditures	**$84,345**
Cash balance at End of Year	123,562
TOTAL EXPENDITURES AND ENDING CASH BALANCE	**$207,907**

CITY OF HATTIESBURG, MISSISSIPPI
A MUNICIPALITY
BUDGET OF ESTIMATED REVENUES AND EXPENDITURES
For the Fiscal Year Ending September 30, 2013

SERIES 2003 TIF BOND & INTEREST FUND (Chauvet Square Project):

REVENUES & BEG. CASH:	
Interest	$0
Transfer From Other Funds	0
Total From All Sources Other Than taxation	0
Beginning Cash and Investment Balance	141,739
Amount to be Raised by Tax Levy	241,356
TOTAL FROM ALL SOURCES	**$383,095**
EXPENDITURES & ENDING CASH:	
General Issues:	
Bonds Redeemed	95,000
Interest on Bonds	97,210
Other Services & Charges	2,000
Transfers to Other Funds	0
Total Expenditures	**$194,210**
Cash balance at End of Year	188,885
TOTAL EXPENDITURES AND ENDING CASH BALANCE	**$383,095**

CITY OF HATTIESBURG, MISSISSIPPI
A MUNICIPALITY
BUDGET OF ESTIMATED REVENUES AND EXPENDITURES
For the Fiscal Year Ending September 30, 2013

SERIES 2007 TIF BOND & INTEREST FUND (Turtle Creek):

REVENUES & BEG. CASH:	
Interest	$300
County Shared Revenue	$108,694
Transfer From Other Funds	
Total From All Sources Other Than taxation	108,994
Beginning Cash and Investment Balance	219,466
Amount to be Raised by Tax Levy	352,517
TOTAL FROM ALL SOURCES	**$680,977**
EXPENDITURES & ENDING CASH:	
General Issues:	
Bonds Redeemed	285,000
Interest on Bonds	149,776
Other Services & Charges	5,000
Total Expenditures	$439,776
Cash balance at End of Year	241,201
TOTAL EXPENDITURES AND ENDING CASH BALANCE	**$680,977**

CITY OF HATTIESBURG, MISSISSIPPI
A MUNICIPALITY
BUDGET OF ESTIMATED REVENUES AND EXPENDITURES
For the Fiscal Year Ending September 30, 2013

2008 TIF BOND AND INTEREST FUND
FUND (Lincoln Center):

REVENUES & BEG. CASH:	
Interest	$0
County Shared Revenue	$0
Transfer From Other Funds	0
Total From All Sources Other Than taxation	0
Beginning Cash and Investment Balance	118,060
Amount to be Raised by Tax Levy	76,913
TOTAL FROM ALL SOURCES	**$194,973**
EXPENDITURES & ENDING CASH:	
General Issues:	
Bonds Redeemed	35,000
Interest on Bonds	18,700
Other Services & Charges	1,000
Total Expenditures	$54,700
Cash balance at End of Year	140,273
TOTAL EXPENDITURES AND ENDING CASH BALANCE	**$194,973**

CITY OF HATTIESBURG, MISSISSIPPI
A MUNICIPALITY
BUDGET OF ESTIMATED REVENUES AND EXPENDITURES
For the Fiscal Year Ending September 30, 2013

2011 TIF BOND AND INTEREST FUND
FUND (Turtle Creek Crossing/Kohl's):

REVENUES & BEG. CASH:	
Interest	$0
County Shared Revenue	$32,200
Transfer From Other Funds	0
Total From All Sources Other Than taxation	32,200
Beginning Cash and Investment Balance	15,788
Amount to be Raised by Tax Levy	74,339
TOTAL FROM ALL SOURCES	**$122,327**
EXPENDITURES & ENDING CASH:	
General Issues:	
Bonds Redeemed	60,000
Interest on Bonds	32,000
Other Services & Charges	1,000
Total Expenditures	$93,000
Cash balance at End of Year	29,327
TOTAL EXPENDITURES AND ENDING CASH BALANCE	**$122,327**

CITY OF HATTIESBURG, MISSISSIPPI
A MUNICIPALITY
BUDGET OF ESTIMATED REVENUES AND EXPENDITURES
For the Fiscal Year Ending September 30, 2013

AIRPORT IMPROVEMENT SPECIAL REVENUE FUND:

REVENUES & BEG. CASH:	
Federal Grants	$990,835
State Shared Revenues	0
Miscellaneous	26,360
Transfers In	
Non-Revenue Receipts	0
Total From All Sources Other Than taxation	1,017,195
Beginning Cash and Investment Balance	124,934
TOTAL FROM ALL SOURCES	**$1,142,129**
EXPENDITURES & ENDING CASH:	
Public Services:	
Other services & Charges	0
Capital Outlays	1,142,129
Total Expenditures	**$1,142,129**
Cash balance at End of Year	0
TOTAL EXPENDITURES AND ENDING CASH BALANCE	**$1,142,129**

CITY OF HATTIESBURG, MISSISSIPPI
A MUNICIPALITY
BUDGET OF ESTIMATED REVENUES AND EXPENDITURES
For the Fiscal Year Ending September 30, 2013

MUNICIPAL ROAD & BRIDGE
SPECIAL REVENUE FUND:

REVENUES & BEG. CASH:	
Inter-governmental Revenues:	
State Grants	$6,945,617
Federal Grants	0
County Shared Revenues	1,992,000
Miscellaneous	682,700
Non-Revenue Receipts	0
Total From All Sources Other Than taxation	9,620,317
Beginning Cash and Investment Balance	592,759
TOTAL FROM ALL SOURCES	**$10,213,076**
EXPENDITURES & ENDING CASH:	
Public Services:	
Supplies & Expenses	225,000
Other services & Charges	707,650
Capital Outlays	9,244,585
Principal Payments	24,293
Interest Payments	5,690
Total Expenditures	**$10,207,218**
Cash balance at End of Year	5,858
TOTAL EXPENDITURES AND ENDING CASH BALANCE	**$10,213,076**

CITY OF HATTIESBURG, MISSISSIPPI
A MUNICIPALITY
BUDGET OF ESTIMATED REVENUES AND EXPENDITURES
For the Fiscal year Ending September 30, 2013

MASS TRANSIT OPERATING
SPECIAL REVENUE FUND:

REVENUES & BEG. CASH:	
Inter-governmental Revenues:	
Federal Grants	$1,974,488
State Grants	$0
Miscellaneous	38,400
Transfers-In	335,000
Total From All Sources Other Than taxation	2,347,888
Beginning Cash and Investment Balance	137,431
Amount to be Raised by Tax Levy	200,000
TOTAL FROM ALL SOURCES	**$2,685,319**
EXPENDITURES & ENDING CASH:	
Personnel	590,784
Supplies & Expenses	224,300
Other services & Charges	169,900
Capital Outlays	1,020,628
Total Expenditures	$2,005,612
Cash balance at End of Year	679,707
TOTAL EXPENDITURES AND ENDING CASH BALANCE	**$2,685,319**

CITY OF HATTIESBURG, MISSISSIPPI
A MUNICIPALITY
BUDGET OF ESTIMATED REVENUES AND EXPENDITURES
For the Fiscal Year Ending September 30, 2013

WATER & SEWER CONSTRUCTION FUND:

REVENUES & BEG. CASH:	
Inter-governmental Revenues:	
Federal Grants	$5,372,959
Miscellaneous	69,460
Transfers-In	1,800,000
Non-Revenue Receipts	
Total From All Sources	
Other Than taxation	7,242,419
Beginning Cash and	
Investment Balance	4,980,039
TOTAL FROM ALL SOURCES	**$12,222,458**
EXPENDITURES & ENDING CASH:	
Other services & Charges	$1,050,000
Capital Outlays	8,690,553
Total Expenditures	9,740,553
Cash balance at End of Year	2,481,905
TOTAL EXPENDITURES AND ENDING CASH BALANCE	**$12,222,458**

CITY OF HATTIESBURG, MISSISSIPPI
A MUNICIPALITY
BUDGET OF ESTIMATED REVENUES AND EXPENDITURES
For the Fiscal Year Ending September 30, 2013

COMMUNITY CENTERS
SPECIAL REVENUE FUND:

REVENUES & BEG. CASH:	
Charges for services:	
Culture & Recreation	$30,000
Miscellaneous	200
Transfers-In	770,000
Non-Revenue Receipts	0
Total From All Sources Other Than taxation	800,200
Beginning Cash and Investment Balance	169,226
TOTAL FROM ALL SOURCES	**$969,426**
EXPENDITURES & ENDING CASH:	
Personnel	506,314
Supplies & Expenses	67,900
Other services & Charges	223,550
Capital Outlays	155,000
Total Expenditures	**$952,764**
Cash balance at End of Year	16,662
TOTAL EXPENDITURES AND ENDING CASH BALANCE	**$969,426**

CITY OF HATTIESBURG, MISSISSIPPI
A MUNICIPALITY
BUDGET OF ESTIMATED REVENUES AND EXPENDITURES
For the Fiscal Year Ending September 30, 2013

SERIES 2009 (Water Meter Project) Bond Construction Fund:

REVENUES & BEG. CASH:	
Proceeds from Bond Issue	0
Interest Earnings	0
Total Revenues	0
Beginning Cash and Investment Balance	49,718
TOTAL FROM ALL SOURCES	**$49,718**
EXPENDITURES & ENDING CASH:	
Supplies	
Other services & Charges	38,150
Capital Outlays	11,568
Total Expenditures	$49,718
Cash balance at End of Year	0
TOTAL EXPENDITURES AND ENDING CASH BALANCE	**$49,718**

CITY OF HATTIESBURG, MISSISSIPPI
A MUNICIPALITY
BUDGET OF ESTIMATED REVENUES AND EXPENDITURES
For the Fiscal Year Ending September 30, 2013

COMMUNITY DEVELOPMENT BLOCK GRANT SPECIAL REVENUE FUND:

REVENUES & BEG. CASH:	
Federal Grants	$1,968,460
Transfers In	0
Total From All Sources Other Than taxation	1,968,460
Beginning Cash and Investment Balance	(17,528)
TOTAL FROM ALL SOURCES	**$1,950,932**
EXPENDITURES & ENDING CASH:	
Personnel	229,589
Supplies & Expenses	7,900
Other services & Charges	541,619
Capital Outlays	1,171,824
Transfers	
Total Expenditures	$1,950,932
Cash balance at End of Year	0
TOTAL EXPENDITURES AND ENDING CASH BALANCE	**$1,950,932**

CITY OF HATTIESBURG, MISSISSIPPI
A MUNICIPALITY
BUDGET OF ESTIMATED REVENUES AND EXPENDITURES
For the Fiscal Year Ending September 30, 2013

SERIES 2012 WATER & SEWER REVENUE BOND
CONSTRUCTION FUND:

REVENUES & BEG. CASH:	
Interest Earnings	1,000
Proceeds from Revenue Bond Issue	
Total Revenues	1,000
Beginning Cash and Investment Balance	7,995,288
TOTAL FROM ALL SOURCES	**$7,996,288**
EXPENDITURES & ENDING CASH:	
Other services & Charges	
Capital Outlays	7,995,288
Transfers Out	
Total Expenditures	$7,995,288
Cash balance at End of Year	1,000
TOTAL EXPENDITURES AND ENDING CASH BALANCE	**$7,996,288**

CITY OF HATTIESBURG, MISSISSIPPI
A MUNICIPALITY
BUDGET OF ESTIMATED REVENUES AND EXPENDITURES
For the Fiscal Year Ending September 30, 2013

SERIES 2001 BOND CONSTRUCTION FUND:

REVENUES & BEG. CASH:

Interest Earnings	$0
Grant Revenues - State of MS	0
Transfers In	0
Proceeds from General Obligation Bond Issue	0
Total Revenues	0
Beginning Cash and Investment Balance	187,427
TOTAL FROM ALL SOURCES	**$187,427**

EXPENDITURES & ENDING CASH:

Other services & Charges	0
Capital Outlays	187,300
Transfers Out	0
Total Expenditures	**$187,300**
Cash balance at End of Year	127
TOTAL EXPENDITURES AND ENDING CASH BALANCE	**$187,427**

CITY OF HATTIESBURG, MISSISSIPPI
A MUNICIPALITY
BUDGET OF ESTIMATED REVENUES AND EXPENDITURES
For the Fiscal Year Ending September 30, 2013

MDB CAPITAL PROJECTS FUND:

REVENUES & BEG. CASH:

Proceeds from Develpment Bank Loans	$0
Grant Revenues - Federal	42,207
Grant Revenues - State of MS	0
Transfers In	0
Miscellaneous	0
Non-Revenue Receipts	
Total Revenues	42,207
Beginning Cash and Investment Balance	85,715
TOTAL FROM ALL SOURCES	**$127,922**

EXPENDITURES & ENDING CASH:

Other services & Charges	0
Capital Outlays	127,922
Total Expenditures	$127,922
Cash Balance at End of Year	0
TOTAL EXPENDITURES AND ENDING CASH BALANCE	**$127,922**

CITY OF HATTIESBURG, MISSISSIPPI
A MUNICIPALITY
BUDGET OF ESTIMATED REVENUES AND EXPENDITURES
For the Fiscal Year Ending September 30, 2013

KAMPER PARK ZOO CAPITAL
IMPROVEMENTS FUND:

REVENUES & BEG. CASH:	
State Grants	$0
Miscellaneous	0
Charges for Services	0
Transfers-In from Other Funds	0
Non-Revenue Receipts	0
Total Revenues	0
Beginning Cash and Investment Balance	86,097
TOTAL FROM ALL SOURCES	**$86,097**
EXPENDITURES & ENDING CASH:	
Supplies	0
Other services & Charges	0
Capital Outlays	86,097
Total Expenditures	$86,097
Cash balance at End of Year	0
TOTAL EXPENDITURES AND ENDING CASH BALANCE	**$86,097**

CITY OF HATTIESBURG, MISSISSIPPI
A MUNICIPALITY
BUDGET OF ESTIMATED REVENUES AND EXPENDITURES
For the Fiscal Year Ending September 30, 2013

SERIES 2010 WATER & SEWER BOND
CONSTRUCTION FUND:

REVENUES & BEG. CASH:	
Bond Proceeds	
Federal Grants	1,049,651
Interest Earnings	0
Total Revenues	1,049,651
Beginning Cash and Investment Balance	(181,292)
TOTAL FROM ALL SOURCES	**$868,359**
EXPENDITURES & ENDING CASH:	
Other services & Charges	0
Capital Outlays	868,299
Total Expenditures	$868,299
Cash balance at End of Year	60
TOTAL EXPENDITURES AND ENDING CASH BALANCE	**$868,359**

City of Hattiesburg, MS

200 Forrest St.
P.O. Box 1898
Hattiesburg, MS 39401

Master

File Number: 2012-1317

File ID:	2012-1317	**Type:**	Resolution	**Status:**	Passed
Version:	1	**Reference:**		**In Control:**	City Council
				File Created:	10/30/2012
Brief Title:	Project Resolution Requisition No. 10 - 2012 Bonds			**Final Action:**	11/06/2012
				Minute Book Number:	MB2012-1/380

Title:

Adopt a Resolution authorizing Requisition No. 10 from the Project Fund Construction Account in connection with that certain loan agreement, dated as of March 29, 2012, by and between the Mississippi Development Bank and the City of Hattiesburg.

Notes:

Sponsors:		**Enactment Date:**	
Attachments:	Bond Requisition No.10, executed RES 2012-125 Bond Requisition No.10	**Enactment Number:**	
Contact:		**Meeting Date:**	11/06/2012
Drafter:	Sharon Waits	**Effective Date:**	

History of Legislative File

Version:	Acting Body:	Date:	Action:	Sent To:	Due Date:	Return Date:	Result:
1	City Council	11/06/2012	Adopt				Pass

Action Text: A MOTION was made by Council Vice President Ware and seconded by Council Member Carroll to Adopt a Resolution authorizing Requisition No. 10 from the Project Fund Construction Account in connection with that certain loan agreement, dated as of March 29, 2012, by and between the Mississippi Development Bank and the City of Hattiesburg.

There being no discussion, the Motion received the affirmative vote of the Council as follows:

Yeas: 5 - Bradley, Delgado, Carroll, Ware and Naylor

Nays: 0

Yea: 5 President Bradley
Council Member Delgado
Council Member Carroll
Vice President Ware
Council Member Naylor

ΓEL-No Vote: 0

Text of Legislative File 2012-1317

Title

Adopt a Resolution authorizing Requisition No. 10 from the Project Fund Construction Account in connection with that certain loan agreement, dated as of March 29, 2012, by and between the Mississippi Development Bank and the City of Hattiesburg.

Summary

Adopt a Resolution authorizing Requisition No. 10 from the Project Fund Construction Account in connection with that certain loan agreement, dated as of March 29, 2012, by and between the Mississippi Development Bank and the City of Hattiesburg.

Budget Information

Expenditure Type

Purchasing Item

Publication Information

The City Council of the City of Hattiesburg, Mississippi (the "City") acting for and on behalf of the City, took up for consideration the matter of requesting and authorizing Requisition No. 10 from the Project Fund Construction Account in connection with the loan agreement between the Mississippi Development Bank and the City dated March 29, 2012. After discussion of the subject, Council Member _____ offered and moved for the adoption of the following resolution:

RESOLUTION OF THE CITY COUNCIL OF THE CITY OF HATTIESBURG, MISSISSIPPI (THE "CITY") AUTHORIZING REQUISITION NO. 10 FROM THE PROJECT FUND CONSTRUCTION ACCOUNT IN CONNECTION WITH THAT CERTAIN LOAN AGREEMENT, DATED AS OF MARCH 29, 2012, BY AND BETWEEN THE MISSISSIPPI DEVELOPMENT BANK AND THE CITY.

Whereas, on March 29, 2012 the City entered into a loan with the Mississippi Development Bank in an amount not to exceed $12,500,000 (the "Loan") pursuant to the terms and conditions of that certain loan agreement, dated as of March 29, 2012, by and between the Mississippi Development Bank and the City (the "Loan Agreement").

Whereas, the City Council of the City now finds it necessary to approve Requisition No. 10 from the Project Fund Construction Account under the Loan in the total aggregate amount of $217,946.12 for the purpose of paying Water & Sewer Projects in connection with the loan as more particularly described in Exhibit A.

NOW, THEREFORE, BE IT RESOLVED BY THE CITY COUNCIL OF THE CITY OF HATTIESBURG, MISSISSIPPI:

SECTION 1. The City Council of the City hereby authorizes and approves Requisition No. 10 from the Project Fund Construction Account under the Loan in the total aggregate amount of Two hundred seventeen thousand nine hundred forty-six and 12/100 dollars ($217,946.12) for the purpose of paying Water & Sewer Projects in connection with the loan as more particularly described in Exhibit A.

SECTION 2. The City Council hereby directs Hancock Bank, as Trustee to disburse funds of Requisition No. 10 in the total aggregate amount of Two hundred seventeen thousand nine hundred forty-six and 12/100 dollars ($217,946.12) as authorized herein, as more particularly described in Exhibit A.

SECTION 3. The Mayor and City Clerk are hereby authorized and directed for and on behalf of the City to take any and all action as may be required by the City to carry out and give effect to the aforesaid documents authorized pursuant to this Resolution and to execute all papers, documents, certificates and other instruments that may be required for the carrying out of the authority conferred by this Resolution in order to evidence the authority.

The above and foregoing resolution, after having been first reduced to writing, was introduced by Council Member _____, seconded by Council Member _____, and was adopted by the following roll call vote, to wit:

YEAS: NAYS:

The President thereby declared the motion carried and the resolution adopted, this the 6th day of November, 2012.

(SEAL)

ATTEST: ADOPTED:

_____ _____

CLERK OF COUNCIL PRESIDENT

The above and foregoing Resolution having been submitted to and approved by the Mayor, this the 6th day of November, 2012.

_____ _____

CITY CLERK MAYOR

EXHIBIT A

PROJECT FUND CONSTRUCTION ACCOUNT REQUISITION

EXHIBIT A

PROJECT FUND CONSTRUCTION ACCOUNT REQUISITION

RE: **$12,500,000 Mississippi Development Bank Special Obligation Bonds, Series 2012 (Hattiesburg, Mississippi Combined Water and Sewer System Construction Project) (the "Bonds") secured by $12,500,000 Promissory Note (Hattiesburg, Mississippi Combined Water and Sewer System Construction Project) (the "Note").**

TO: **Hancock Bank**
The Quarter Specialty Center
1855 Lakeland Drive, Suite Q-230
Jackson, Mississippi 39216
ATTN: Trust and Financial Services Group

REQUISITION NO.: **10**

DATE OF REQUISITION: **11/6/2012**

Item #	Payee Name & Address	Budget Line Item	Payment Amount	Invoice #	Purchase Order #	Purpose of Payment
1.	Greenbriar DSLP 1941 Hwy 550 NW Brookhaven, MS 39601	094695.7245.18	$ 46,720.23	Pay App #3	128416	Construction of water system rehabilitation at Country Club area for period 9/1/12 - 9/30/12. MB 2012-1/106
2.	Fowlkes Plumbing 110 Highway 6 Amory, MS 38821	094695.7245.23	$ 12,565.89	Pay App #3		Construction of COMSWIP Water System Expansion on WSF Tatum Blvd & Bonhomie Rd for the period 8/28/12-10/1/12. MB 2012-1/141
3.	Shows, Dearman, & Waits, Inc. 301 Second Ave P O Box 1711 Hattiesburg, MS 39403-1711	094695.7220.51	$ 6,975.00	17134		Design Services for Sewer Improvements Phase IV for period 8/26/12 - 9/22/12. MB 2011-4/89-110
4.	Shows, Dearman, & Waits, Inc. 301 Second Ave P O Box 1711 Hattiesburg, MS 39403-1711	094695.7220.01	$ 1,660.00	17143		Design Services for Sewer Improvements Phase III for period 8/26/12 - 9/22/12. MB 2011-4/89-110
5.	Josh Morris 38 Rolling Woods Hattiesburg, MS 39402 Phone 601-268-0235	094695.7245.03	$ 150,025.00	N/A		Purchase parcel of land to be used as site for booster station. MB 2012-1/329
			$ 217,946.12			

BILL TO:
CITY OF HATTIESBURG
ACCOUNTING DEPT
PO BOX 1898
HATTIESBURG, MS 39403-1898
FAX INVOICE TO: 601-584-4895

CITY OF HATTIESBURG
P U R C H A S E O R D E R
THE CITY IS NOT LIABLE FOR SALES TAX ID# 64-6000432

POINT OF CONTACT:

Page - 1
Date - 10/26/12

PO No. - 128416

Req No. - 139154

VENDOR MAILING:
GREENBRIAR DIGGING SERVICE LP
1941 HIGHWAY 550 NW
BROOKHAVEN MS 39601-9615

WAITS, SHARON (601) 5454640
MINUTE BOOK # 2012-1/106
STATE CONTRACT# sewer/water bond
VENDOR # 00075114

SHIP TO :
CITY OF HATTIESBURG
ENGINEERING/PUBLIC SERVICES
212 WEST FRONT STREET-CENTENNIAL BLDG
HATTIESBURG MS 39401

PROCESSING CODE: RIP

SEND METHOD O ( )

PROJECT LINE: COUNTRY CLUB AREA WATER REHAB

Account #	Description	QTY	UM	UNIT COST	TOTAL COST
094695.7245.18	CONSTRUCTION Project: COMSWIP Country Club Area Water Rehab Period: 9/1/12 - 9/30/12 Pay Application No. 3	1.00	EA	46,720.2300	46,720.23

TOTAL CONTRACT AMOUNT NOT TO EXCEED 46,720.23

SUBMIT SEPARATE INVOICES FOR EACH ORDER. PREPAY SHIPPING CHARGES IF ANY AND ADD TO INVOICE.

THIS PO NUMBER MUST APPEAR ON ALL PACKAGES & INVOICES.

FOR CORRECTIONS TO VENDOR ADDRESS ABOVE, CONTACT ACCOUNTING (601) 545-4686.

EDDIE R. MYERS
CITY CLERK

SHOWS, DEARMAN & WAITS, INC.
CONSULTING ENGINEERS
P.O. BOX 1711, 301 SECOND AVENUE
HATTIESBURG, MISSISSIPPI 39403-1711
P: (601) 544-1821 F: (601) 544-0501
HTTP://WWW.SD-W.COM

OR 139154
128416

RAYMOND M. DEARMAN, P.E., R.L.S.
MICHAEL T. WAITS, P.E., R.L.S.
NICHOLAS M. CONNOLLY, P.E., P.L.S.
KYLE D. WALLACE, P.E.
SHEA E. McNEASE, P.E.
JOHN T. WEEKS, P.E.
BENNIE J. SELLERS, P.E., R.L.S.
MARCELIN JOSEPH, E.I.

PAUL J. SHOWS (1996)

October 10, 2012

RECEIVED 10/10/12

City of Hattiesburg
P.O. Box 1898
Hattiesburg, MS 39403

Attn: Bert Kuyrkendall

Re: Water System Rehabilitation in the Hattiesburg Country Club Area
Contract B
City of Hattiesburg

Bert:

Enclosed please find Pay Estimate No. 3 in the amount of $46,720.23 for the above referenced project.

Should you have any questions or comments, please do not hesitate to call.

Sincerely,

Shea E. McNease, P.E.
Vice President
Project Engineer

/rs

Enclosure

cc: Jessie Neal, Greenbriar
Steve Tingle, SD&W

APPROVED FOR PAYMENT
DATE 10/26/12
SIGNATURE

MB 2012-1/106

G:\PROJECTS\Hattiesburg_City of\1242 - Water System Rehab Hburg Country Club\Corres\Contract B\1242_Kuyrkendall_Pay Estimate 3.docx

094695. 7245.18 ENTERED

GREENBRIAR

1941 Highway 550 NW
Brookhaven, MS 39601-9615
Telephone: 601-833-0975
Fax: 601-833-0986

October 2, 2012

Shea E. McNease, P.E.
Shows, Dearman & Waits, Inc.
P. O. Box 1711
Hattiesburg, Mississippi 39403-1711

RE: CITY OF HATTIESBURG
WATER SYSTEM REHABILITATION
IN THE COUNTRY CLUB AREA – CONTRACT B
GDS PROJECT NO. 1914

Dear Shea:

Please find enclosed Pay Estimate No. Three for the above referenced project.

Please advise if we may be of further assistance.

Sincerely,

GREENBRIAR

Joni Culpepper

Joni Culpepper, Project Coordinator

SUMMARY OF PAY ESTIMATES

ESTIMATE NO.	AMOUNT / DATE		PAYMENT DATE	COMMENTS
ONE	75,191.07	7-30-12	9-4-12	
TWO	60,328.15	9-4-12		
THREE	46,720.23	10-2-12		

CONTRACTOR:	GREENBRIAR DSLP 1941 HWY 550 NW BROOKHAVEN, MS 39601	ORIGINAL CONTRACT: CHANGE ORDERS: REVISED CONTRACT:	$254,700.00 0.00 $254,700.00
OWNER:	CITY OF HATTIESBURG P. O. BOX 1898 HATTIESBURG, MS 39403-1898	ORIGINAL COMPLETION:	January 5, 2013

PROJECT: WATER SYSTEM REHABILITATION IN THE COUNTRY CLUB AREA -- CONTRACT B

ESTIMATE #: THREE

DATE: SEPTEMBER 1, 2012 to SEPTEMBER 30, 2012

	THIS PERIOD AMOUNT	TOTAL TO DATE AMOUNT
BASE BID TOTALS:	73,806.00	188,546.00
STORED MATERIAL:	-24,626.81	3,285.00
TOTALS EARNED:	49,179.19	191,831.00
AMOUNT RETAINED 5 %:	2,458.96	9,591.55
PREVIOUS PAYMENT REQUESTS:	0.00	135,519.22
AMOUNT DUE:	46,720.23	46,720.23

CONTRACTOR Certification:

The undersigned CONTRACTOR certifies that (1) all previous progress payments received from OWNER on account of Work done under the Contract referred to above have been applied to discharge in full all obligations of CONTRACTOR incurred in connection with Work covered by prior Applications for Payment number 1 through 2 Inclusive; and (2) title to all materials and equipment incorporated in said Work or otherwise listed in or covered by this Application for Payment will pass to OWNER at time of payment free and clear of all liens, claims, security interests and encumbrances (except such as covered by Bond acceptable to OWNER).

Dated October 2, 2012

GREENBRIAR DSLP
CONTRACTOR

By: Jessie Neal, Managing Partner

ENGINEER Recommendation:

This Application (with accompanying documentation) meets the requirements of the Contract Documents and payment of the above AMOUNT DUE THIS APPLICATION is recommended.

Dated 10/10, 2012

SHOWS, DEARMAN & WAITS, INC.
ENGINEER

By:

OWNER APPROVAL:

BY:
CITY OF HATTIESBURG, MS

DATE: 10/26/12

ESTIMATE NUMBER: THREE
NAME OF CONTRACTOR: GREENBRIAR DSLP, 1941 HWY 550 NW, BROOKHAVEN, MS 39601
NAME OF OWNER: CITY OF HATTIESBURG, P. O. BOX 1898, HATTIESBURG, MS 39403-1898
CONTRACT AMOUNT: ORIGINAL $ 254,700.00
COMPLETION DATE: ORIGINAL January 5, 2013
DATES OF ESTIMATE: SEPTEMBER 1, 2012 to SEPTEMBER 30, 2012
PROJECT DESCRIPTION: WATER SYSTEM REHABILITATION IN THE COUNTRY CLUB AREA -- CONTRACT B

ITEM	DESCRIPTION	UNIT	QUANTITY	UNIT PRICE	TOTAL PRICE	THIS PERIOD QUANTITY	THIS PERIOD AMOUNT	TOTAL TO DATE QUANTITY	TOTAL TO DATE AMOUNT
1.	Clearing & Grubbing	LS	1	5,000.00	5,000.00	0.30	1,500.00	0.70	3,500.00
2.	Remove and Replace Pipe Culvert, All Sizes	LF	188	20.00	3,760.00		-		-
3.	Remove and Salvage of Existing Fire Hydrants	EA	1	250.00	250.00		-		-
4.	Cut and Cap Existing Water Line to Stay in Service	EA	2	500.00	1,000.00		-		-
5.	Granular Material (Class 9, Group C) (Roadway Only)	CY	228	10.00	2,280.00	292	2,920.00	292	2,920.00
6.	Asphalt Pavement Repair (All Thicknesses) (Roadway Only)	SY	560	33.00	18,480.00		-		-
7.	6" PVC Water Line, C900, Class 200 (Open Cut)	LF	2,380	13.00	30,940.00	138	1,794.00	2,210	28,730.00
8.	8" PVC Water Line, C900, Class 200 (Open Cut)	LF	4,760	17.00	80,920.00	1,711	29,087.00	4,778	81,226.00
9.	12" Steel Casing (0.25 WT) (Bored) (All Depths)	LF	180	70.00	12,600.00	60	4,200.00	180	12,600.00
10.	16" Steel Casing (0.25 WT) (Bored) (All Depths)	LF	120	85.00	10,200.00	80	6,800.00	80	6,800.00
11.	16" Steel Casing (0.25 WT) (Open Cut) (All Depths)	LF	30	40.00	1,200.00	60	2,400.00	80	3,200.00
12.	6" Hot Tap w/Valve to Existing 12" Water Line	EA	2	2,000.00	4,000.00	1	2,000.00	1	2,000.00
13.	8" Hot Tap w/Valve to Existing 12" Water Line	EA	1	2,500.00	2,500.00	1	2,500.00	1	2,500.00
14.	Tie Proposed 6" Water Line to Exist 6" Water Line	EA	1	500.00	500.00	1	500.00	1	500.00
15.	Tie Proposed 6" Water Line to Exist 6" Water Line (w/Tee)	EA	1	800.00	800.00	1	800.00	1	800.00
16.	Tie Proposed 6" Water Line to Exist 8" Water Line (w/Tee)	EA	1	900.00	900.00	1	900.00	1	900.00
17.	Tie Proposed 8" Water Line to Exist 8" Water Line (w/Tee)	EA	1	950.00	950.00		-		-
18.	6" Gate Valve	EA	3	750.00	2,250.00		-	3	2,250.00
19.	8" Gate Valve	EA	6	1,050.00	6,300.00	3	3,150.00	6	6,300.00
20.	Three Way Fire Hydrant w/Appurtenances (Incl. Tee, 90 Bend, Pipe, Valve, Hydrant, Etc.)	EA	8	3,000.00	24,000.00	3	9,000.00	8	24,000.00
21.	Blow Off w/Valve	EA	1	400.00	400.00		-	1	400.00
22.	Reconnect Existing Service (Incl. Saddle, Service Tubing, Corp. Stop, Fittings, Etc.) (Meter, Meter Box, and Yokes provided by owner)	EA	117	160.00	18,720.00		-		-
23.	Service Line Bore	LF	1,550	5.00	7,750.00	801	4,005.00	934	4,670.00
24.	Mobilization	LS	1	5,000.00	5,000.00	0.30	1,500.00	0.70	3,500.00
25.	Maintenance of Traffic	LS	1	2,500.00	2,500.00	0.30	750.00	0.70	1,750.00
26.	Grassing	LS	1	6,500.00	6,500.00		-		-
27.	Erosion Control (As Directed)	LS	1	5,000.00	5,000.00		-		-
	TOTALS				$ 254,700.00		$ 73,806.00		$ 188,546.00

HATTIESBURG, MS -- WATER SYSTEM REHABILITATION IN THE COUNTRY CLUB AREA - CONTRACT B
STORED MATERIAL

ESTIMATE NO: 3 FROM: September 1, 2012 TO: September 30, 2012

NO.	ITEM	UNIT	COST	THIS PERIOD ADDED	THIS PERIOD REDUCED	TOTAL TO DATE QUANTITY	TOTAL TO DATE AMOUNT
7.	6" PVC Water Line	LF	$ 4.10		138	170	$ 697.00
8.	8" PVC Water Line	LF	$ 7.07		1,711	0	-
9.	12" Steel Casing	LF	$ 17.50		60	0	-
10; 11.	16" Steel Casing	LF	$ 21.00		140	0	-
12.	12" x 6" Tapping Sleeve	EA	$ 480.00		1	1	480.00
	6" MJ x Flg Gate Valve	EA	$ 420.00		1	1	420.00
13.	12" x 8" Tapping Sleeve	EA	$ 550.00		1	0	-
	8" MJ x Flg Gate Valve	EA	$ 650.00		1	0	-
18; 20.	6" MJ Gate Valve	EA	$ 388.00		3	1	388.00
19.	8" MJ Gate Valve	EA	$ 592.50		3	0	-
20.	Fire Hydrant	EA	$ 1,300.00		3	1	1,300.00
					TOTAL		$ 3,285.00

OR 139172

SHOWS, DEARMAN & WAITS, INC.
CONSULTING ENGINEERS
P.O. BOX 1711, 301 SECOND AVENUE
HATTIESBURG, MISSISSIPPI 39403-1711
P: (601) 544-1821 F: (601) 544-0501
HTTP://WWW.SD-W.COM

RAYMOND M. DEARMAN, P.E., R.L.S.
MICHAEL T. WAITS, P.E., R.L.S.
NICHOLAS M. CONNOLLY, P.E., P.L.S.
KYLE D. WALLACE, P.E.
SHEA E. McNEASE, P.E.
JOHN T. WEEKS, P.E.
BENNIE J. SELLERS, P.E., R.L.S.
MARCELIN JOSEPH, E.I.

PAUL J. SHOWS (1996)

October 4, 2012

[10/9/12]

City of Hattiesburg
P.O. Box 1898
Hattiesburg, MS 39403

Attn: Bert Kuyrkendall

Re: Water System Expansion
WSF Tatum Blvd and Bonhomie Rd
City of Hattiesburg

Bert:

Enclosed please find Pay Estimate No. 3 in the amount of $12,565.89 for the above referenced project.

Should you have any questions or comments, please do not hesitate to call.

Sincerely,

Shea E. McNease, P.E.
Vice President
Project Engineer

/rs

Enclosure

cc: Wade Phillips
Fowlkes Plumbing via email

MB 2012-1/141

G:\PROJECTS\Hattiesburg_City of\F05-1214W6 - Bonhomie Road\Corres\1214W6_Kuyrkendall_Pay Estimate3.docx

094695.1245.23

SHOWS, DEARMAN & WAITS, INC. - CONSULTING ENGINEERS -

Date: 10-1-12

Project: Water System Expansion on WSF Tatum & Bonhomie Rd 1214W6
City of Hattiesburg

Pay Estimate No.: Three (3)

Contractor:
Fowlkes Plumbing
110 Hwy 6 Amory, MS 38821

Pay Period: August 28 - Oct 1, 2012

Item No.	Item Description	Total Quantities On Cont. Price Est.	Total Quantities Allowed This Period	Total Quantities Allowed To Date	Unit	Unit Price	Amount
						CONTRACT TOTAL:	$ 307,664.90
1	Clearing and Grubbing	1	0	1	L.S.	$656.00	$ 656.00
2	12" Ductile Iron Water Line, Class 350	6809	120	6,706	L.F.	$30.10	$ 201,850.60
3	14" SDR-13 (Directional Bored) (Including Fittings)	100	0	160	L.F.	$109.60	$ 17,536.00
4	18" Steel Casing (Open Cut)	110			L.F.	$51.00	$ -
5	20" Steel Casing (Bored)	140	0	120	L.F.	$81.60	$ 9,792.00
6	Tie Proposed 12" D.I. to Existing 12" (Hot Tap w/ valve)	1	0	2	Each	$5,894.00	$ 11,788.00
7	Tie Proposed 12" D.I. to Existing 12" (w/ Tee)	2	0	1	Each	$2,127.00	$ 2,127.00
8	Tie Proposed 12" D.I. to Existing 8"	1	0	1	Each	$2,370.00	$ 2,370.00
9	8" Gate Value	1	0	1	Each	$1,185.00	$ 1,185.00
10	12" Gate Valve	5	0	4	Each	$1,840.00	$ 7,360.00
11	Pressure Relief Valve	1	0	1	Each	$14,455.00	$ 14,455.00
12	3-Way Fire Hydrant, and Appurtenances	8	0	8	Each	$2,982.00	$ 23,856.00
13	Mobilization	1	0	1	L.S.	$9,165.00	$ 9,165.00
14	Grassing	1	1	1	L.S.	$1,800.00	$ 1,800.00
15	Erosion Control	1	0.25	1	L.S.	$1,885.00	$ 1,885.00
16	12" Bored Ductile Iron (No Casing)	0	90	90	L.F.	$81.60	$ 7,344.00

Total Earned - Regular Work	$ 313,169.60
Less 5% Retainage	$ 15,658.48
Stored Materials	
Total Due - Regular Work	$ 297,511.12
Less Previous Payments	$ 284,945.23
Net Amount Due This Estimate	$ 12,565.89
Less Deductions	$ -
Net Payment Due	$ 12,565.89

Time Elapsed to Date: 100%
Percent Complete: 102%

CERTIFIED CORRECT:
Shows, Dearman & Waits, Inc.

Shea E. McNease, P.E.
Project Engineer

APPROVED:
City of Hattiesburg

OWNER

Shows, Dearman, and Waits Inc.
P. O. Box 1711
Hattiesburg, MS 39403-1711
Phone: 601.544.1821

CITY OF HATTIESBURG
P. O. BOX 1898
HATTIESBURG, MS 39403-1898

September 26, 2012
Project No: 1273-S004
Invoice No: 17134

Manager John Weeks
Project 1273-S004 Comprehensive Sewer Imp. Ph IV

Work - In - Progress

Professional Services for the Period:August 26, 2012 to September 22, 2012
Professional Personnel

	Hours	Rate	Amount	
PROJECT ENGINEER				
Weeks, John	46.50	150.00	6,975.00	
Totals	46.50		6,975.00	
Total Labor				**6,975.00**
				$6,975.00

Outstanding Invoices

Number	Date	Balance
17093	9/4/2012	4,500.00
Total		**4,500.00**

Total Now Due **$11,475.00**

APPROVED FOR PAYMENT
DATE 10/26/12
SIGNATURE

094695, 7220.51
MB 2011-4/89-110

Shows, Dearman, and Waits Inc.
P. O. Box 1711
Hattiesburg, MS 39403-1711
Phone: 601.544.1821

CITY OF HATTIESBURG
P. O. BOX 1898
HATTIESBURG, MS 39403-1898

September 26, 2012
Project No: 1273-S003
Invoice No: 17143

Manager Kyle Wallace

Project 1273-S003 Comprehensive Sewer Improvements Ph III

Professional Services for the Period:August 26, 2012 to September 22, 2012

Professional Personnel

	Hours	Rate	Amount	
AUTO CAD TECHNICIAN				
Sullivan, Richard	1.00	85.00	85.00	
PROJECT ENGINEER				
Wallace, Kyle	10.50	150.00	1,575.00	
Totals	11.50		1,660.00	
Total Labor				**1,660.00**
				$1,660.00

APPROVED FOR PAYMENT
DATE 10/26/12
SIGNATURE

094695 7220.01
MB 2011-4/89-110

City of Hattiesburg, MS

200 Forrest St.
P.O. Box 1898
Hattiesburg, MS 39401

Master

File Number: 2012-0901

File ID: 2012-0901 **Type:** Regular Agenda Item **Status:** Passed

Version: 1 **Reference:** **In Control:** City Council

File Created: 06/22/2012

Brief Title: Approve the purchase of a portion of Lamar County Tax Parcel 052Q-10-045.000 for use as the location of the Hwy 98 Booster Station. **Final Action:** 09/18/2012

Minute Book Number:

Title:

Approve the purchase of a portion of Lamar County Tax Parcel 052Q-10-045.000 from Mr. Josh Morris for $150,025.00, to be used as the location of the Hwy 98 Booster Station; Authorize Mayor to execute purchase documents; Authorize the issuance of a manual check for closing of transaction.

Notes: 094695.7245.03

Sponsors: **Enactment Date:**

Attachments: Survey, Booster Station Memo, 1273w001_brochure_map **Enactment Number:**

Contact: **Meeting Date:** 09/18/2012

Drafter: Sharon Waits **Effective Date:**

History of Legislative File

Version:	Acting Body:	Date:	Action:	Sent To:	Due Date:	Return Date:	Result:
1	City Council	09/18/2012	Approve				Pass

Action Text: A MOTION was made by Council Member Carroll and seconded by Council Member Naylor to Approve Addendum to the Professional Services Contract between the City of Hattiesburg and Neel-Schaffer, Inc. to extend the term of the contract to September 16, 2013 for the Safe Routes to School - Woodley Elementary Project (SRSP-0210-00(024) LPA 106139-411000) originally approved at Minute Book number 2011-3/235-250; Authorize Mayor to execute agreement in triplicate.

There being no discussion, the Motion received the affirmative vote of the Council as follows:

Yeas: 5 - Bradley, Delgado, Carroll, Ware and Naylor

Nays: 0

Yea: 5 President Bradley, Council Member Delgado, Council Member Carroll, Vice President Ware, and Council Member Naylor

Text of Legislative File 2012-0901

Title
Approve the purchase of a portion of Lamar County Tax Parcel 052Q-10-045.000 from Mr. Josh Morris for $150,025.00, to be used as the location of the Hwy 98 Booster Station; Authorize Mayor to execute purchase documents; Authorize the issuance of a manual check for closing of transaction.

Summary
Approve the purchase of a portion of Lamar County Tax Parcel 052Q-10-045.000 for use as the location of the Hwy 98 Booster Station.

Budget Information
094695.7245.03

Expenditure Type
Regular Budget Item

Purchasing Item
Regular Purchase

Publication Information

Prepared by:
Charles E. Lawrence, Jr.
Attorney and Counselor at Law
Post Office Box 1624
Hattiesburg, MS 39403-1624
(601) 582-4157

Return to:
City of Hattiesburg
P. O. Box 1898
Hattiesburg, MS 39403
(601) 545-4501

RECORD IN: **Section 10, Township 4 North, Range 14 West, Hattiesburg, Lamar County, Mississippi**

STATE OF MISSISSIPPI

COUNTY OF LAMAR

WARRANTY DEED

FOR AND IN CONSIDERATION of the sum of Ten Dollars, ($10.00), cash in hand paid, and other good and valuable considerations, the receipt and sufficiency of which are hereby acknowledged, I,

JOSH MORRIS
38 Rolling Woods
Hattiesburg, MS 39402
Telephone (601) 268-0235

Grantor, do hereby grant, bargain, sell, convey and warrant unto

CITY OF HATTIESBURG
Post Office Box 1898
Hattiesburg, MS 39403-1898
Telephone (601) 545-4501

Grantee, the following described property lying and being situated in Hattiesburg, Lamar County, Mississippi, to-wit:

A part of the Southeast ¼ of the Southwest ¼ of Section 10, Township 4 North, Range 14 West, in the City of Hattiesburg, County of Lamar, State of Mississippi, and being more particularly described as Commencing at a ½ inch Rebar representing the Southwest Corner of the Southwest ¼ of the said Southwest ¼ of Section 10, thence run N00°09'57"W along the West Line of said Southwest ¼ of the Southwest ¼ for 1,109.31 feet, thence run East for 2,269.26 feet to a Point on the Northern Right of Way Line of US Highway 98 and the Point of Beginning; thence run N09°37'48"W for 85.00 feet, thence run N80°22'12"E and parallel to said Northern Right of Way Line for 100.00 feet, thence run S09°37'48"E for 85.00 feet to a Point on said Northern Right of Way Line, thence run S80°22'12"W along said Northern Right of Way Line for 100.00 feet to the Point of Beginning, comprising 0.20 Acres (8,500 Square Feet), more or less.

Said property is not part of the homestead of the grantor.

Taxes for the year 2012 shall be pro rated.

WITNESS MY SIGNATURE on this the _____ day of _____, 2012.

_____
JOSH MORRIS

STATE OF MISSISSIPPI

COUNTY OF FORREST

PERSONALLY CAME AND APPEARED BEFORE ME, the undersigned authority, in and for the jurisdiction aforesaid, the within named, **JOSH MORRIS**, personally known to me or proven to me by sufficient identification, who acknowledge that he signed, executed and delivered the above and foregoing Warranty Deed on the day and year therein mentioned for the purpose therein stated.

SWORN TO AND SUBSCRIBED BEFORE me on this the _____ day of _____, 2012.

_____
NOTARY PUBLIC

My Commission Expires:

_____

Hattiesburg, Mississippi does hereby certify to Hancock Bank, as trustee in respect to the referenced Bonds (the Trustee"):

(1) The amounts herein requisitioned to be paid to the above-designated payees are for the items or services hereinabove described.
(2) The items or services listed above for which payment is proposed to be made hereunder have not formed the basis for any payment heretofore made from the Project Fund Construction Account.
(3) Each of the items was reasonable and necessary in connection with the "Construction Project" being financed pursuant to the Loan Agreement dated as of March 29, 2012 (the "Loan Agreement").
(4) The payment herein authorized and approved is a proper charge against the Project Fund Construction Account as provided for in Section 3 of the Loan Agreement.
(5) The invoices or statements from the contractor, vendor or other payee or other document supporting the amounts requisitioned herein are on file with the City.

CITY OF HATTIESBURG, MISSISSIPPI

By: _____
Title: Director of Administration/City Clerk
(Authorized City Representative)

The City Council of the City of Hattiesburg, Mississippi (the "City") acting for and on behalf of the City, took up for consideration the matter of requesting and authorizing Requisition No. 10 from the Project Fund Construction Account in connection with the loan agreement between the Mississippi Development Bank and the City dated March 29, 2012. After discussion of the subject, Council Member Naylor offered and moved for the adoption of the following resolution:

RESOLUTION OF THE CITY COUNCIL OF THE CITY OF HATTIESBURG, MISSISSIPPI (THE "CITY") AUTHORIZING REQUISITION NO. 10 FROM THE PROJECT FUND CONSTRUCTION ACCOUNT IN CONNECTION WITH THAT CERTAIN LOAN AGREEMENT, DATED AS OF MARCH 29, 2012, BY AND BETWEEN THE MISSISSIPPI DEVELOPMENT BANK AND THE CITY.

Whereas, on March 29, 2012 the City entered into a loan with the Mississippi Development Bank in an amount not to exceed $12,500,000 (the "Loan") pursuant to the terms and conditions of that certain loan agreement, dated as of March 29, 2012, by and between the Mississippi Development Bank and the City (the "Loan Agreement").

Whereas, the City Council of the City now finds it necessary to approve Requisition No. 10 from the Project Fund Construction Account under the Loan in the total aggregate amount of $217,946.12 for the purpose of paying Water & Sewer Projects in connection with the loan as more particularly described in Exhibit A.

NOW, THEREFORE, BE IT RESOLVED BY THE CITY COUNCIL OF THE CITY OF HATTIESBURG, MISSISSIPPI:

SECTION 1. The City Council of the City hereby authorizes and approves Requisition No. 10 from the Project Fund Construction Account under the Loan in the total aggregate amount of Two hundred seventeen thousand nine hundred forty-six and 12/100 dollars ($217,946.12) for the purpose of paying Water & Sewer Projects in connection with the loan as more particularly described in Exhibit A.

SECTION 2. The City Council hereby directs Hancock Bank, as Trustee to disburse funds of Requisition No. 10 in the total aggregate amount of Two hundred seventeen thousand nine hundred forty-six and 12/100 dollars ($217,946.12) as authorized herein, as more particularly described in Exhibit A.

SECTION 3. The Mayor and City Clerk are hereby authorized and directed for and on behalf of the City to take any and all action as may be required by the City to carry out and give effect to the aforesaid documents authorized pursuant to this Resolution and to execute all papers, documents, certificates and other instruments that may be required for the carrying out of the authority conferred by this Resolution in order to evidence the authority.

The above and foregoing resolution, after having been first reduced to writing, was introduced by Council Member Naylor, seconded by Council Member Carroll, and was adopted by the following roll call vote, to wit:

YEAS: Bradley
Delgado
Carroll
Ware
Naylor

NAYS: None

The President thereby declared the motion carried and the resolution adopted, this the 6th day of November, 2012.

(SEAL)

ATTEST:

CLERK OF COUNCIL

ADOPTED:

PRESIDENT

The above and foregoing Resolution having been submitted to and approved by the Mayor, this the 6th day of November, 2012.

CITY CLERK

MAYOR

EXHIBIT A

PROJECT FUND CONSTRUCTION ACCOUNT REQUISITION

EXHIBIT A

PROJECT FUND CONSTRUCTION ACCOUNT REQUISITION

RE: **$12,500,000 Mississippi Development Bank Special Obligation Bonds, Series 2012 (Hattiesburg, Mississippi Combined Water and Sewer System Construction Project) (the "Bonds") secured by $12,500,000 Promissory Note (Hattiesburg, Mississippi Combined Water and Sewer System Construction Project) (the "Note").**

TO: **Hancock Bank**
The Quarter Specialty Center
1855 Lakeland Drive, Suite Q-230
Jackson, Mississippi 39216
ATTN: Trust and Financial Services Group

REQUISITION NO.: **10**

DATE OF REQUISITION: **11/6/2012**

Item #	Payee Name & Address	Budget Line Item	Payment Amount	Invoice #	Purpose of Payment
1.	Greenbriar DSLP 1941 Hwy 550 NW Brookhaven, MS 39601	094695.7245.18	$ 46,720.23	Pay App #3	Construction of water system rehabilitation at Country Club area for period 9/1/12 - 9/30/12. MB 2012-1/106
2.	Fowlkes Plumbing 110 Highway 6 Amory, MS 38821	094695.7245.23	$ 12,565.89	Pay App #3	Construction of COMSWIP Water System Expansion on WSF Tatum Blvd & Bonhomie Rd for the period 8/28/12-10/1/12. MB 2012-1/141
3.	Shows, Dearman, & Waits, Inc. 301 Second Ave P O Box 1711 Hattiesburg, MS 39403-1711	094695.7220.51	$ 6,975.00	17134	Design Services for Sewer Improvements Phase IV for period 8/26/12 - 9/22/12. MB 2011-4/89-110
4.	Shows, Dearman, & Waits, Inc. 301 Second Ave P O Box 1711 Hattiesburg, MS 39403-1711	094695.7220.01	$ 1,660.00	17143	Design Services for Sewer Improvements Phase III for period 8/26/12 - 9/22/12. MB 2011-4/89-110
5.	Josh Morris & Martha Jo Howell Land Co. LLC 38 Rolling Woods Hattiesburg, MS 39402 Phone 601-268-0235	094695.7245.03	$ 150,025.00	N/A	Purchase parcel of land to be used as site for booster station. MB 2012-1/329
			$ 217,946.12		

BILL TO:
CITY OF HATTIESBURG
ACCOUNTING DEPT
PO BOX 1898
HATTIESBURG, MS 39403-1898
FAX INVOICE TO: 601-584-4895

CITY OF HATTIESBURG
P U R C H A S E O R D E R
THE CITY IS NOT LIABLE FOR SALES TAX ID# 64-6000432

POINT OF CONTACT:

Page - 1
Date - 10/26/12

PO No. - 128416

Req No. - 139154

VENDOR MAILING:
GREENBRIAR DIGGING SERVICE LP
1941 HIGHWAY 550 NW
BROOKHAVEN MS 39601-9615

WAITS, SHARON (601) 5454640
MINUTE BOOK # 2012-1/106
STATE CONTRACT# sewer/water bond
VENDOR # 00075114

SHIP TO :
CITY OF HATTIESBURG
ENGINEERING/PUBLIC SERVICES
212 WEST FRONT STREET-CENTENNIAL BLDG
HATTIESBURG MS 39401

PROCESSING CODE: RIP

SEND METHOD 0 ( )

PROJECT LINE: COUNTRY CLUB AREA WATER REHAB

Account #	Description	QTY	UM	UNIT COST	TOTAL COST
094695.7245.18	CONSTRUCTION Project: COMSWIP Country Club Area Water Rehab Period: 9/1/12 - 9/30/12 Pay Application No. 3	1.00	EA	46,720.2300	46,720.23

TOTAL CONTRACT AMOUNT NOT TO EXCEED 46,720.23

SUBMIT SEPARATE INVOICES FOR EACH ORDER. PREPAY SHIPPING CHARGES IF ANY AND ADD TO INVOICE.

THIS PO NUMBER MUST APPEAR ON ALL PACKAGES & INVOICES.

FOR CORRECTIONS TO VENDOR ADDRESS ABOVE, CONTACT ACCOUNTING (601) 545-4686.

EDDIE R. MYERS
CITY CLERK

OR 139154
128416

SHOWS, DEARMAN & WAITS, INC.
CONSULTING ENGINEERS
P.O. BOX 1711, 301 SECOND AVENUE
HATTIESBURG, MISSISSIPPI 39403-1711
P: (601) 544-1821 F: (601) 544-0501
HTTP://WWW.SD-W.COM

RAYMOND M. DEARMAN, P.E., R.L.S.
MICHAEL T. WAITS, P.E., R.L.S.
NICHOLAS M. CONNOLLY, P.E., P.L.S.
KYLE D. WALLACE, P.E.
SHEA E. McNEASE, P.E.
JOHN T. WEEKS, P.E.
BENNIE J. SELLERS, P.E., R.L.S.
MARCELIN JOSEPH, E.I.

PAUL J. SHOWS (1996)

RECEIVED 10/10/12

October 10, 2012

City of Hattiesburg
P.O. Box 1898
Hattiesburg, MS 39403

Attn: Bert Kuyrkendall

Re: Water System Rehabilitation in the Hattiesburg Country Club Area
Contract B
City of Hattiesburg

Bert:

Enclosed please find Pay Estimate No. 3 in the amount of $46,720.23 for the above referenced project.

Should you have any questions or comments, please do not hesitate to call.

Sincerely,

Shea E. McNease, P.E.
Vice President
Project Engineer

/rs

Enclosure

cc: Jessie Neal, Greenbriar
Steve Tingle, SD&W

APPROVED FOR PAYMENT
DATE 10/26/12
SIGNATURE

MB 2012-1/106

G:\PROJECTS\Hattiesburg_City of\1242 - Water System Rehab Hburg Country Club\Corres\Contract B\1242_Kuyrkendall_Pay Estimate 3.docx

094695. 7245.18 ENTERED

GREENBRIAR

1941 Highway 550 NW
Brookhaven, MS 39601-9615
Telephone: 601-833-0975
Fax: 601-833-0986

October 2, 2012

Shea E. McNease, P.E.
Shows, Dearman & Waits, Inc.
P. O. Box 1711
Hattiesburg, Mississippi 39403-1711

RE: CITY OF HATTIESBURG
WATER SYSTEM REHABILITATION
IN THE COUNTRY CLUB AREA – CONTRACT B
GDS PROJECT NO. 1914

Dear Shea:

Please find enclosed Pay Estimate No. Three for the above referenced project.

Please advise if we may be of further assistance.

Sincerely,

GREENBRIAR

Joni Culpepper

Joni Culpepper, Project Coordinator

SUMMARY OF PAY ESTIMATES

ESTIMATE NO.	AMOUNT	DATE	PAYMENT DATE	COMMENTS
ONE	75,191.07	7-30-12	9-4-12	
TWO	60,328.15	9-4-12		
THREE	46,720.23	10-2-12		

CONTRACTOR: GREENBRIAR DSLP
1941 HWY 550 NW
BROOKHAVEN, MS 39601

ORIGINAL CONTRACT: $254,700.00
CHANGE ORDERS: 0.00
REVISED CONTRACT: $254,700.00

OWNER: CITY OF HATTIESBURG
P. O. BOX 1898
HATTIESBURG, MS 39403-1898

ORIGINAL COMPLETION: January 5, 2013

PROJECT: WATER SYSTEM REHABILITATION IN THE COUNTRY CLUB AREA -- CONTRACT B

ESTIMATE #: THREE

DATE: SEPTEMBER 1, 2012 to SEPTEMBER 30, 2012

	THIS PERIOD AMOUNT	TOTAL TO DATE AMOUNT
BASE BID TOTALS:	73,806.00	188,546.00
STORED MATERIAL:	-24,626.81	3,285.00
TOTALS EARNED:	49,179.19	191,831.00
AMOUNT RETAINED 5 %:	2,458.96	9,591.55
PREVIOUS PAYMENT REQUESTS:	0.00	135,519.22
AMOUNT DUE:	46,720.23	46,720.23

CONTRACTOR Certification:

The undersigned CONTRACTOR certifies that (1) all previous progress payments received from OWNER on account of Work done under the Contract referred to above have been applied to discharge in full all obligations of CONTRACTOR incurred in connection with Work covered by prior Applications for Payment number 1 through 2 Inclusive; and (2) title to all materials and equipment incorporated in said Work or otherwise listed in or covered by this Application for Payment will pass to OWNER at time of payment free and clear of all liens, claims, security interests and encumbrances (except such as covered by Bond acceptable to OWNER).

Dated October 2, 2012

GREENBRIAR DSLP
CONTRACTOR

By: Jessie Neal, Managing Partner

ENGINEER Recommendation:

This Application (with accompanying documentation) meets the requirements of the Contract Documents and payment of the above AMOUNT DUE THIS APPLICATION is recommended.

Dated 10/10, 2012

SHOWS, DEARMAN & WAITS, INC.
ENGINEER

By:

OWNER APPROVAL:

BY:
CITY OF HATTIESBURG, MS

DATE: 10/26/12

ESTIMATE NUMBER: THREE
NAME OF CONTRACTOR: GREENBRIAR DSLP, 1941 HWY 550 NW, BROOKHAVEN, MS 39601
NAME OF OWNER: CITY OF HATTIESBURG, P. O. BOX 1898, HATTIESBURG, MS 39403-1898
CONTRACT AMOUNT: ORIGINAL $ 254,700.00
COMPLETION DATE: ORIGINAL January 5, 2013
DATES OF ESTIMATE: SEPTEMBER 1, 2012 to SEPTEMBER 30, 2012
PROJECT DESCRIPTION: WATER SYSTEM REHABILITATION IN THE COUNTRY CLUB AREA -- CONTRACT B

ITEM	DESCRIPTION	UNIT	QUANTITY	UNIT PRICE	TOTAL PRICE	THIS PERIOD QUANTITY	THIS PERIOD AMOUNT	TOTAL TO DATE QUANTITY	TOTAL TO DATE AMOUNT
1.	Clearing & Grubbing	LS	1	5,000.00	5,000.00	0.30	1,500.00	0.70	3,500.00
2.	Remove and Replace Pipe Culvert, All Sizes	LF	188	20.00	3,760.00		-		-
3.	Remove and Salvage of Existing Fire Hydrants	EA	1	250.00	250.00		-		-
4.	Cut and Cap Existing Water Line to Stay in Service	EA	2	500.00	1,000.00		-		-
5.	Granular Material (Class 9, Group C) (Roadway Only)	CY	228	10.00	2,280.00	292	2,920.00	292	2,920.00
6.	Asphalt Pavement Repair (All Thicknesses) (Roadway Only)	SY	560	33.00	18,480.00		-		-
7.	6" PVC Water Line, C900, Class 200 (Open Cut)	LF	2,380	13.00	30,940.00	138	1,794.00	2,210	28,730.00
8.	8" PVC Water Line, C900, Class 200 (Open Cut)	LF	4,760	17.00	80,920.00	1,711	29,087.00	4,778	81,226.00
9.	12" Steel Casing (0.25 WT) (Bored) (All Depths)	LF	180	70.00	12,600.00	60	4,200.00	180	12,600.00
10.	16" Steel Casing (0.25 WT) (Bored) (All Depths)	LF	120	85.00	10,200.00	80	6,800.00	80	6,800.00
11.	16" Steel Casing (0.25 WT) (Open Cut) (All Depths)	LF	30	40.00	1,200.00	60	2,400.00	80	3,200.00
12.	6" Hot Tap w/Valve to Existing 12" Water Line	EA	2	2,000.00	4,000.00	1	2,000.00	1	2,000.00
13.	8" Hot Tap w/Valve to Existing 12" Water Line	EA	1	2,500.00	2,500.00	1	2,500.00	1	2,500.00
14.	Tie Proposed 6" Water Line to Exist 6" Water Line	EA	1	500.00	500.00	1	500.00	1	500.00
15.	Tie Proposed 6" Water Line to Exist 6" Water Line (w/Tee)	EA	1	800.00	800.00	1	800.00	1	800.00
16.	Tie Proposed 6" Water Line to Exist 8" Water Line (w/Tee)	EA	1	900.00	900.00	1	900.00	1	900.00
17.	Tie Proposed 8" Water Line to Exist 8" Water Line (w/Tee)	EA	1	950.00	950.00		-		-
18.	6" Gate Valve	EA	3	750.00	2,250.00		-	3	2,250.00
19.	8" Gate Valve	EA	6	1,050.00	6,300.00	3	3,150.00	6	6,300.00
20.	Three Way Fire Hydrant w/Appurtenances (Incl. Tee, 90 Bend, Pipe, Valve, Hydrant, Etc.)	EA	8	3,000.00	24,000.00	3	9,000.00	8	24,000.00
21.	Blow Off w/Valve	EA	1	400.00	400.00		-	1	400.00
22.	Reconnect Existing Service (Incl. Saddle, Service Tubing, Corp. Stop, Fittings, Etc.) (Meter, Meter Box, and Yokes provided by owner)	EA	117	160.00	18,720.00		-		-
23.	Service Line Bore	LF	1,550	5.00	7,750.00	801	4,005.00	934	4,670.00
24.	Mobilization	LS	1	5,000.00	5,000.00	0.30	1,500.00	0.70	3,500.00
25.	Maintenance of Traffic	LS	1	2,500.00	2,500.00	0.30	750.00	0.70	1,750.00
26.	Grassing	LS	1	6,500.00	6,500.00		-		-
27.	Erosion Control (As Directed)	LS	1	5,000.00	5,000.00		-		-
	TOTALS				$ 254,700.00		$ 73,806.00		$ 188,546.00

HATTIESBURG, MS -- WATER SYSTEM REHABILITATION IN THE COUNTRY CLUB AREA - CONTRACT B
STORED MATERIAL

ESTIMATE NO: 3 FROM: September 1, 2012 TO: September 30, 2012

NO.	ITEM	UNIT	COST	THIS PERIOD ADDED	THIS PERIOD REDUCED	TOTAL TO DATE QUANTITY	TOTAL TO DATE AMOUNT
7.	6" PVC Water Line	LF	$ 4.10		138	170	$ 697.00
8.	8" PVC Water Line	LF	$ 7.07		1,711	0	-
9.	12" Steel Casing	LF	$ 17.50		60	0	-
10; 11.	16" Steel Casing	LF	$ 21.00		140	0	-
12.	12" x 6" Tapping Sleeve	EA	$ 480.00		1	1	480.00
	6" MJ x Flg Gate Valve	EA	$ 420.00		1	1	420.00
13.	12" x 8" Tapping Sleeve	EA	$ 550.00		1	0	-
	8" MJ x Flg Gate Valve	EA	$ 650.00		1	0	-
18; 20.	6" MJ Gate Valve	EA	$ 388.00		3	1	388.00
19.	8" MJ Gate Valve	EA	$ 592.50		3	0	-
20.	Fire Hydrant	EA	$ 1,300.00		3	1	1,300.00
					TOTAL		$ 3,285.00

OK 139172

SHOWS, DEARMAN & WAITS, INC.
CONSULTING ENGINEERS
P.O. BOX 1711, 301 SECOND AVENUE
HATTIESBURG, MISSISSIPPI 39403-1711
P: (601) 544-1821 F: (601) 544-0501
HTTP://WWW.SD-W.COM

RAYMOND M. DEARMAN, P.E., R.L.S.
MICHAEL T. WAITS, P.E., R.L.S.
NICHOLAS M. CONNOLLY, P.E., P.L.S.
KYLE D. WALLACE, P.E.
SHEA E. McNEASE, P.E.
JOHN T. WEEKS, P.E.
BENNIE J. SELLERS, P.E., R.L.S.
MARCELIN JOSEPH, E.I.

PAUL J. SHOWS (1996)

October 4, 2012

[10/9/12]

City of Hattiesburg
P.O. Box 1898
Hattiesburg, MS 39403

Attn: Bert Kuyrkendall

Re: Water System Expansion
WSF Tatum Blvd and Bonhomie Rd
City of Hattiesburg

Bert:

Enclosed please find Pay Estimate No. 3 in the amount of $12,565.89 for the above referenced project.

Should you have any questions or comments, please do not hesitate to call.

Sincerely,

Shea E. McNease, P.E.
Vice President
Project Engineer

/rs

Enclosure

cc: Wade Phillips
Fowlkes Plumbing via email

MB 20121/141

G:\PROJECTS\Hattiesburg_City of\F05-1214W6 - Bonhomie Road\Corres\1214W6_Kuyrkendall_Pay Estimate3.docx

094695.1245.23

SHOWS, DEARMAN & WAITS, INC. - CONSULTING ENGINEERS -

Date: 10-1-12

Project: Water System Expansion on WSF Tatum & Bonhomie Rd 1214W6
City of Hattiesburg

Pay Estimate No.: Three (3)

Contractor:
Fowlkes Plumbing
110 Hwy 6 Amory, MS 38821

Pay Period: August 28 - Oct 1, 2012

Item No.	Item Description	Total Quantities: On Cont. Price Est.	Total Quantities: Allowed This Period	Total Quantities: Allowed To Date	Unit	Unit Price	Amount
					CONTRACT TOTAL:		$ 307,664.90
1	Clearing and Grubbing	1	0	1	L.S.	$656.00	$ 656.00
2	12" Ductile Iron Water Line, Class 350	6809	120	6,706	L.F.	$30.10	$ 201,850.60
3	14" SDR-13 (Directional Bored) (Including Fittings)	100	0	160	L.F.	$109.60	$ 17,536.00
4	18" Steel Casing (Open Cut)	110			L.F.	$51.00	$ -
5	20" Steel Casing (Bored)	140	0	120	L.F.	$81.60	$ 9,792.00
6	Tie Proposed 12" D.I. to Existing 12" (Hot Tap w/ valve)	1	0	2	Each	$5,894.00	$ 11,788.00
7	Tie Proposed 12" D.I. to Existing 12" (w/ Tee)	2	0	1	Each	$2,127.00	$ 2,127.00
8	Tie Proposed 12" D.I. to Existing 8"	1	0	1	Each	$2,370.00	$ 2,370.00
9	8" Gate Value	1	0	1	Each	$1,185.00	$ 1,185.00
10	12" Gate Valve	5	0	4	Each	$1,840.00	$ 7,360.00
11	Pressure Relief Valve	1	0	1	Each	$14,455.00	$ 14,455.00
12	3-Way Fire Hydrant, and Appurtenances	8	0	8	Each	$2,982.00	$ 23,856.00
13	Mobilization	1	0	1	L.S.	$9,165.00	$ 9,165.00
14	Grassing	1	1	1	L.S.	$1,800.00	$ 1,800.00
15	Erosion Control	1	0.25	1	L.S.	$1,885.00	$ 1,885.00
16	12" Bored Ductile Iron (No Casing)	0	90	90	L.F.	$81.60	$ 7,344.00

Total Earned - Regular Work	$ 313,169.60
Less 5% Retainage	$ 15,658.48
Stored Materials	
Total Due - Regular Work	$ 297,511.12
Less Previous Payments	$ 284,945.23
Net Amount Due This Estimate	$ 12,565.89
Less Deductions	$ -
Net Payment Due	$ 12,565.89

Time Elapsed to Date: 100%
Percent Complete: 102%

CERTIFIED CORRECT:
Shows, Dearman & Waits, Inc.

Shea E. McNease, P.E.
Project Engineer

APPROVED:
City of Hattiesburg

OWNER

Shows, Dearman, and Waits Inc.
P. O. Box 1711
Hattiesburg, MS 39403-1711
Phone: 601.544.1821

CITY OF HATTIESBURG
P. O. BOX 1898
HATTIESBURG, MS 39403-1898

September 26, 2012
Project No: 1273-S004
Invoice No: 17134

Manager John Weeks
Project 1273-S004 Comprehensive Sewer Imp. Ph IV

Work - In - Progress

Professional Services for the Period:August 26, 2012 to September 22, 2012

Professional Personnel

	Hours	Rate	Amount	
PROJECT ENGINEER				
Weeks, John	46.50	150.00	6,975.00	
Totals	46.50		6,975.00	
Total Labor				**6,975.00**
				$6,975.00

Outstanding Invoices

Number	Date	Balance
17093	9/4/2012	4,500.00
Total		**4,500.00**

Total Now Due **$11,475.00**

APPROVED FOR PAYMENT
DATE 10/26/12
SIGNATURE

094695.7220.51
MB 2011-4/89-110

Shows, Dearman, and Waits Inc.
P. O. Box 1711
Hattiesburg, MS 39403-1711
Phone: 601.544.1821

CITY OF HATTIESBURG
P. O. BOX 1898
HATTIESBURG, MS 39403-1898

September 26, 2012
Project No: 1273-S003
Invoice No: 17143

Manager Kyle Wallace

Project 1273-S003 Comprehensive Sewer Improvements Ph III

Professional Services for the Period:August 26, 2012 to September 22, 2012

Professional Personnel

	Hours	Rate	Amount	
AUTO CAD TECHNICIAN				
Sullivan, Richard	1.00	85.00	85.00	
PROJECT ENGINEER				
Wallace, Kyle	10.50	150.00	1,575.00	
Totals	11.50		1,660.00	
Total Labor				**1,660.00**
				$1,660.00

APPROVED FOR PAYMENT
DATE 10/26/12
SIGNATURE

094695 7220.01
MB 2011-4/89-110

City of Hattiesburg, MS

200 Forrest St.
P.O. Box 1898
Hattiesburg, MS 39401

Master

File Number: 2012-1301

File ID:	2012-1301	**Type:**	Regular Agenda Item	**Status:**	Agenda Ready
Version:	1	**Reference:**		**In Control:**	City Council
				File Created:	10/30/2012
Brief Title:	Renewal agreement with Hattiesburg Convention Commission for management of the East Sixth Street USO Club and Museum			**Final Action:**	11/06/2012
				Minute Book Number:	MB2012-1/380-381

Title:

Authorize Mayor to execute renewal agreement with Hattiesburg Convention Commission for management of the East Sixth Street USO Club and Museum (Nunc Pro Tunc).

Notes:

Sponsors:		**Enactment Date:**	
Attachments:	USO Contract 2011, executed USO Contract 2011	**Enactment Number:**	
Contact:		**Meeting Date:**	11/06/2012
Drafter:		**Effective Date:**	

History of Legislative File

Version:	Acting Body:	Date:	Action:	Sent To:	Due Date:	Return Date:	Result:
1	City Council	11/06/2012	Authorize				Pass

Action Text: A MOTION was made by Council Member Naylor and seconded by Council Member Carroll to Authorize Mayor to execute renewal agreement with Hattiesburg Convention Commission for management of the East Sixth Street USO Club and Museum (Nunc Pro Tunc).

There being no discussion, the Motion received the affirmative vote of the Council as follows:

Yeas: 5 - Bradley, Delgado, Carroll, Ware and Naylor

Nays: 0

Yea: 5 President Bradley
Council Member Delgado
Council Member Carroll
Vice President Ware
Council Member Naylor

TEL-No Vote: 0

Text of Legislative File 2012-1301

Title

Authorize Mayor to execute renewal agreement with Hattiesburg Convention Commission for management of the East Sixth Street USO Club and Museum (Nunc Pro Tunc).

Summary

Renewal agreement with Hattiesburg Convention Commission for management of the East Sixth Street USO Club and Museum

Budget Information

Expenditure Type

Purchasing Item

Publication Information

EAST SIXTH STREET USO CLUB & MUSEUM AGREEMENT

This Agreement, effective this ___ day of April 2011, between the City of Hattiesburg (hereinafter named "City") and the Hattiesburg Convention Commission;

RECITALS

1. Senate Bill 3232 approved May 3, 1991, creates the Hattiesburg Convention Commission for the "promotion of conventions and tourism." [SECTION 2(1)]

2. SECTION 4 of the Act states in part,

   "The commission shall have jurisdiction and authority over all matters relating to the establishment, development, construction, furnishing and equipping of convention and tourism-related facilities within the City of Hattiesburg, including the authority to enter into such contracts and agreements as may be necessary to carry out the intent of this act....."

3. SECTION 5 of the Act refers to the provision of funds for the construction, furnishing, equipping, erection and operation of tourism and convention facilities. The Commission is authorized to make contracts in that respect and has full and sole discretion and authority to do so as long as it complies with the law.

4. The Convention Commission, created by Legislative act, is a separate and independent body corporate and politic. Its members are appointed by the Mayor and confirmed by the City Council, and its budget is approved by the City Council. The Convention Commission seeks to function with the City in common effort to achieve growth and responsible stewardship.

5. All funds for the construction, operation and maintenance of the Convention Center and its various facilities, including future expansions, are derived solely from the 2% Food and Beverage tax. No property ad valorem taxes are involved.

6. The Commission has requested that the City of Hattiesburg allow it to assume full financial, operational, and marketing responsibility for the East Sixth Street USO Club & Museum and related property, including staffing, project development and overall management. The Commission is authorized to, and makes said request.

WITNESSETH

Therefore, in consideration of the foregoing and the terms and conditions hereinafter contained, the City and the Hattiesburg Convention Commission do hereby agree as follows:

Article I

SCOPE

The Scope of contract shall be to provide renovation funding, operational funding, operational management, marketing, staffing and overall management and development of the East Sixth Street USO Club & Museum, a historical museum and venue owned by the City of Hattiesburg. The Hattiesburg Convention Commission may, at its discretion, utilize existing and future contracts with public and private entities to perform the functions listed herein. The specifically contracted services are outlined in Appendix A, which is attached and fully part of this contract.

Article II

DURATION OF CONTRACT

The Hattiesburg Convention Commission shall begin the herein described duties under this contract upon the date of signing by the parties below. These contracted duties and responsibilities shall be performed by the Hattiesburg Convention Commission for a period of five years from the renewal date above. At the will of both parties, upon completion of the term of this contract, the agreement will renew annually. Should either party wish to discontinue the contract, provisions are provided in Article III.

Article III

NOTICE OF CANCELLATION

The City of Hattiesburg and the Hattiesburg Convention Commission reserve the right to cancel this agreement at any time upon six months written notice to the other party. The City of Hattiesburg agrees to reimburse on a pro rata basis, the Hattiesburg Convention Commission for capital equipment or major renovation expenditures installed in the East Sixth Street USO Club & Museum in the two years prior to date of notice of cancellation.

Article IV

COVENANT AGAINST CONTINGENT FEES

The Hattiesburg Convention Commission shall comply with all relevant federal, state and local laws. The Hattiesburg Convention Commission warrants that it has not employed or retained any company or person, other than a bona fide employee working for the Hattiesburg Convention Commission, to secure this contract, and that it has not paid or agreed to pay any company or person any fee, commission, percentage, brokerage fee, gift, or any other consideration, contingent upon or resulting from the awarding of this contract. For evidenced breach or violation of this warranty the City shall have the right to annul this contract without liability, or, at its discretion, to deduct from the contract price the full amount of such fee, commission, percentage, brokerage fee, gift, or contingent fee.

Article V

MANAGEMENT AUTHORITY

Execution of this contract by the City shall designate the Hattiesburg Convention Commission as the Management Agency of Record for the East Sixth Street USO Club & Museum. The Hattiesburg Convention Commission shall be authorized to act on behalf of the City with regard to all contractual matters including facility management, museum development and marketing, evaluation, approval and contracting of current and future outsourced services, establishment of operational procedures, development and implementation of reasonable operational policies and procedures for users, provision of data and information, collection of any revenues and application of same towards operations, as well as contact with the press, media and general public.

The Hattiesburg Convention Commission and its contracted management company maintain policies and practices that are designed to prevent discrimination against any qualified employee or applicant on the basis of race, color, religion, ancestry, national origin, sex, age, marital status, sexual orientation, disability and medical condition to the extent protected by law. This policy of nondiscrimination applies to all employment practices, including hiring, compensation, benefits, promotion, training, and termination. In addition, the Hattiesburg Convention Commission and its contracted management company seek to reflect the demographic mix of Hattiesburg MSA in its hiring and employment of tourism facility operations professionals. Further, the Hattiesburg Convention Commission practices employment of industry professionals appropriate for the credibility and sensitivity of each unique venue.

Article VI

CIVIC/CITY USE OF FACILITY

The Hattiesburg Convention Commission agrees to complimentary usage of the East Sixth Street USO Club & Museum by the City of Hattiesburg as is reasonable and available for conduct of public forums, governmental meetings, scholastic programming, or civic programming of interest to a broad constituency. Availability of said complimentary usage will be based upon existing events and Museum usage patterns.

Article VII

INDEMNIFICATION FOR CLAIMS AND LIABILITY

The Hattiesburg Convention Commission shall be indemnified by the City of Hattiesburg for any and all damages to property or persons and shall save harmless its officers, agents, and employees from all suits, claims, actions, or damages of any nature whatsoever resulting from the performance of work under this contract or any pre-existing conditions and decisions of this project; provided however, this indemnification shall not extend to negligent acts or omissions of the Hattiesburg Convention Commission.

The City shall be indemnified by the Hattiesburg Convention Commission for any and all damages to property or persons, and it and its officers, agents, and employees shall be held harmless from all suits, claims,

actions, or damages of any nature whatsoever resulting from the performance of duties under this contract or any pre-existing conditions of the Hattiesburg Convention Commission; provided however, this indemnification shall not extend to negligent acts or omissions of the City of Hattiesburg.

Article VIII

ASSIGNMENT OR TRANSFER

The Hattiesburg Convention Commission agrees not to assign or transfer this contract in whole without prior written approval of the City. The Hattiesburg Convention Commission reserves the right to assign specific performance functions named in this contract to privately contracted firms as it deems appropriate. The Hattiesburg Convention Commission agrees that said assignment does not waive its responsibilities or obligations under the terms of this agreement.

Article IX

COVENANTS BINDING UPON SUCCESSORS AND ASSIGNS

The covenants herein contained shall, except as otherwise indicated, accrue to the benefit of and be binding upon the successors and assigns of the parties hereto.

IN WITNESS WHEREOF, said parties have hereto set their hands the day and year above first written.

HATTIESBURG CONVENTION COMMISSION
One Convention Center Plaza
Hattiesburg, MS 39401

By:
Andy Stetelman
Chairman, H'bg Convention Commission

Date: _____

CITY OF HATTIESBURG
P.O. Box 1898
Hattiesburg, MS 39403-1898

By:
Johnny DuPree
Mayor, City of Hattiesburg

Date: _____

Appendix A

DEFINITION

The term "facilities" as used herein, shall mean all structures and improvements planned, developed and operated under the project entitled, "East Sixth Street USO Club & Museum."

FACILITY AND MUSEUM DEVELOPMENT

1) **Project Analyses** - The Hattiesburg Convention Commission will, from existing and subsequent analyses, develop a comprehensive summary of user needs for the development. This will include, but is not limited to, user needs and civic aspirations, planning and evaluation of ancillary development on the property for incorporation into overall facility program, neighborhood considerations and tourism development aspects.

2) **Venue Development** - As the Hattiesburg Convention Commission determines appropriate and productive, in conjunction with the City of Hattiesburg, African-American Military History Museum Committee and other user groups, it will evaluate and implement appropriate construction, installation and modification of the facility to improve its effectiveness as a museum, tourism venue and historical structure. Said activities will occur with respect to project's attractiveness to the neighborhood, Historic Downtown area and community as a whole. The Hattiesburg Convention Commission agrees any significant modifications will be discussed and reviewed with the architect of record and/or MS Department of Archives and History to preserve the historical accuracy of the facility.

FACILITY AND MUSEUM OPERATIONS

3) **Operational Structure** - The Hattiesburg Convention Commission will utilize existing knowledge and expertise of its staff currently allocated to the Commission venues to encourage economies of scale with regard to Maintenance, Event Operations and Marketing. Additionally, the Commission will provide a professional museum curator able to develop the historical and museum components of this facility as well as the Historic Eureka School.

4) **Staffing of Facility** - The Hattiesburg Convention Commission, or its contracted private management entity, will review and establish appropriate staffing requirements and seek to fill available full-time, part-time and contractual staff positions. The Hattiesburg Convention Commission and its agents maintain policies and practices that are designed to prevent discrimination against any qualified employee or applicant on the basis of race, color, religion, ancestry, national origin, sex, age, marital status, sexual orientation, disability and medical condition to the extent protected by law. This policy of nondiscrimination applies to all employment practices, including hiring, compensation, benefits, promotion, training, and termination.

   Specific human resource activities will include...

   a- Establish appropriate staffing requirements for successful venue and museum operations.
   b- Develop (as appropriate) for each position:

1- Job description
2- Specific duties
3- Performance criteria
4- Financial compensation range (inclusive of benefits)
5- Schedule/hours of work

c- Advertise positions in accordance with applicable law and policy.
e- Conduct employee interview process as required.
f- Provide orientation program for new employees.
g- Provide on-going training and development program for venue and museum staff.
h- Conduct performance evaluations as required.

5) **Operations Sub-Contracting** - The Hattiesburg Convention Commission will evaluate fixed and optional sub-contracted operational contracts for the venue. Hattiesburg Convention Commission will review and negotiate sub-contracted operational activities, as appropriate.

a- Identify specific venue operational components requiring fixed or sub-contracted performance.
b- Investigate and review industry standards, recommendations and historical data for contracted and fixed operational components.
c- Develop and review policies and procedure for proposed sub-contracted components of venue. This can include...Term of contract, performance bonding, control aspects, exclusivity clauses, types of services, operating conditions, hours of operation, license fees, audit and accounting controls, taxes and fees, operational surcharges, workers compensation, utility usage, termination clauses, subordination clauses, amendments, surety bonds, personnel practices, personnel training requirements, uniforms, work performance evaluations, inventory and control, equipment maintenance and usage, business ethics, quality and value, wage scales, endorsements and advertising.

6) **Booking and Event Management** - The Hattiesburg Convention Commission will develop, administer and oversee all booking and event management services for East Sixth Street USO Club & Museum during the terms of this contract. This will include Facility Marketing (see appropriate section), booking and reserving of venue and management of events.

a- Research and develop sales and booking policies.
b- Utilize existing booking and event management software and staff.
c- Implement integrated event management accounting and reservations program.
d- Develop, review and produce venue use agreement and contracts.
e- Develop event management policies and procedures. This may include, crowd control, security, ADA accessibility, public and restricted entry, food and beverage management, event coordination plan, equipment distribution, etc.
f- Develop on-call staffing requirements and database of providers.
g- Begin equipment inventory program for event-related equipment.
h- Develop site tour program.
i- Develop facility safety program.

MUSEUM MARKETING

7) **Market Analysis** - The Hattiesburg Convention Commission will identify potential clients and target markets for marketing of the Museum, including educational, African-American, military and historical tourism audiences. In addition, the Hattiesburg Convention Commission will conduct an annual review and analysis of national, regional and state industry tourism and museum trends.

Specific components include...

1) Build Potential user database based upon
   a) Seasonality
   b) Frequency of Tours
   c) Group Size
   d) Type of Audience

2) Targets within the Educational Markets
   a) University
   b) Elementary Schools
   c) Secondary Schools
   d) High Schools
   e) Kindergartens
   f) Private Schools

3) Targets within the Historical and Motorcoach Markets
   a) Military Tours (including regional, African-American, WWII, etc.)
   b) Military Reunions
   c) African-American Tourism
   d) Civil Rights Tourism
   e) Hattiesburg-focused Reunions
   f) Educational Reunions

8) **Market Planning** - The Hattiesburg Convention Commission will develop a comprehensive marketing strategy, a specific marketing plan and an overall marketing budget on an annual basis.

Specific Components include...

1) Development of a dynamic long term Marketing Overview based on ongoing market analysis.
2) Develop annual market plan based on long-term objectives.
3) Develop annual marketing budget.

9) **Marketing Activities** - The Hattiesburg Convention Commission will coordinate the production of marketing and collateral materials, develop contracts with potential clients, establish annual advertising campaigns including space ads, direct mail and familiarization tours.

Specific Components include...

1) Coordination of Marketing and Collateral Material production
   a) Media Kits - Develop up-to-date media kits on an ongoing basis.
   b) Venue Information Package - Package to include marketing/tour booklet, diagrams of site plan and general facility data.
   c) Facility Contracts - Develop comprehensive booking contracts and use policies.

2) Develop Marketing Network
a) Joining Various Professional Groups
Which may include...
aa) State Historical Associations
bb) National Historical Associations
cc) African-American Military Associations
dd) Historical Military Associations
ee) State Museum Associations
ff) African-American Tourism Associations

3) Develop Marketing Programs including...
a) Cooperative Advertisement
b) Incentives
c) Value-Added Tour Packages
d) Electronic Media Sources
aa) Expand Web Site

4) Media Open House
a) Develop Mailing List
b) Develop and produce Media Packet

5) Set Up Familiarization Tour Plan

10) **Marketing Evaluation** - The Hattiesburg Convention Commission will provide a plan for ongoing evaluation of factors which will materially affect the viability of and promote the success of the East Sixth Street USO Club & Museum. This will include monitoring of trends, review of marketing and service programs, recommendations for modification and enhancement of existing programs.

1) Post Tour Surveys
a) Develop Post Tour Survey
b) Conduct interval Post Tour Evaluation Programs
c) Identify financial impacts including cost/benefits analysis for Museum and local economy

2) Review, Discussion and Improvement of annual Marketing Programs

EAST SIXTH STREET USO CLUB & MUSEUM AGREEMENT

This Agreement, effective this ___ day of April 2011, between the City of Hattiesburg (hereinafter named "City") and the Hattiesburg Convention Commission;

RECITALS

1. Senate Bill 3232 approved May 3, 1991, creates the Hattiesburg Convention Commission for the "promotion of conventions and tourism." [SECTION 2(1)]

2. SECTION 4 of the Act states in part,

   "The commission shall have jurisdiction and authority over all matters relating to the establishment, development, construction, furnishing and equipping of convention and tourism-related facilities within the City of Hattiesburg, including the authority to enter into such contracts and agreements as may be necessary to carry out the intent of this act....."

3. SECTION 5 of the Act refers to the provision of funds for the construction, furnishing, equipping, erection and operation of tourism and convention facilities. The Commission is authorized to make contracts in that respect and has full and sole discretion and authority to do so as long as it complies with the law.

4. The Convention Commission, created by Legislative act, is a separate and independent body corporate and politic. Its members are appointed by the Mayor and confirmed by the City Council, and its budget is approved by the City Council. The Convention Commission seeks to function with the City in common effort to achieve growth and responsible stewardship.

5. All funds for the construction, operation and maintenance of the Convention Center and its various facilities, including future expansions, are derived solely from the 2% Food and Beverage tax. No property ad valorem taxes are involved.

6. The Commission has requested that the City of Hattiesburg allow it to assume full financial, operational, and marketing responsibility for the East Sixth Street USO Club & Museum and related property, including staffing, project development and overall management. The Commission is authorized to, and makes said request.

WITNESSETH

Therefore, in consideration of the foregoing and the terms and conditions hereinafter contained, the City and the Hattiesburg Convention Commission do hereby agree as follows:

Article I

SCOPE

The Scope of contract shall be to provide renovation funding, operational funding, operational management, marketing, staffing and overall management and development of the East Sixth Street USO Club & Museum, a historical museum and venue owned by the City of Hattiesburg. The Hattiesburg Convention Commission may, at its discretion, utilize existing and future contracts with public and private entities to perform the functions listed herein. The specifically contracted services are outlined in Appendix A, which is attached and fully part of this contract.

Article II

DURATION OF CONTRACT

The Hattiesburg Convention Commission shall begin the herein described duties under this contract upon the date of signing by the parties below. These contracted duties and responsibilities shall be performed by the Hattiesburg Convention Commission for a period of five years from the renewal date above. At the will of both parties, upon completion of the term of this contract, the agreement will renew annually. Should either party wish to discontinue the contract, provisions are provided in Article III.

Article III

NOTICE OF CANCELLATION

The City of Hattiesburg and the Hattiesburg Convention Commission reserve the right to cancel this agreement at any time upon six months written notice to the other party. The City of Hattiesburg agrees to reimburse on a pro rata basis, the Hattiesburg Convention Commission for capital equipment or major renovation expenditures installed in the East Sixth Street USO Club & Museum in the two years prior to date of notice of cancellation.

Article IV

COVENANT AGAINST CONTINGENT FEES

The Hattiesburg Convention Commission shall comply with all relevant federal, state and local laws. The Hattiesburg Convention Commission warrants that it has not employed or retained any company or person, other than a bona fide employee working for the Hattiesburg Convention Commission, to secure this contract, and that it has not paid or agreed to pay any company or person any fee, commission, percentage, brokerage fee, gift, or any other consideration, contingent upon or resulting from the awarding of this contract. For evidenced breach or violation of this warranty the City shall have the right to annul this contract without liability, or, at its discretion, to deduct from the contract price the full amount of such fee, commission, percentage, brokerage fee, gift, or contingent fee.

Article V

MANAGEMENT AUTHORITY

Execution of this contract by the City shall designate the Hattiesburg Convention Commission as the Management Agency of Record for the East Sixth Street USO Club & Museum. The Hattiesburg Convention Commission shall be authorized to act on behalf of the City with regard to all contractual matters including facility management, museum development and marketing, evaluation, approval and contracting of current and future outsourced services, establishment of operational procedures, development and implementation of reasonable operational policies and procedures for users, provision of data and information, collection of any revenues and application of same towards operations, as well as contact with the press, media and general public.

The Hattiesburg Convention Commission and its contracted management company maintain policies and practices that are designed to prevent discrimination against any qualified employee or applicant on the basis of race, color, religion, ancestry, national origin, sex, age, marital status, sexual orientation, disability and medical condition to the extent protected by law. This policy of nondiscrimination applies to all employment practices, including hiring, compensation, benefits, promotion, training, and termination. In addition, the Hattiesburg Convention Commission and its contracted management company seek to reflect the demographic mix of Hattiesburg MSA in its hiring and employment of tourism facility operations professionals. Further, the Hattiesburg Convention Commission practices employment of industry professionals appropriate for the credibility and sensitivity of each unique venue.

Article VI

CIVIC/CITY USE OF FACILITY

The Hattiesburg Convention Commission agrees to complimentary usage of the East Sixth Street USO Club & Museum by the City of Hattiesburg as is reasonable and available for conduct of public forums, governmental meetings, scholastic programming, or civic programming of interest to a broad constituency. Availability of said complimentary usage will be based upon existing events and Museum usage patterns.

Article VII

INDEMNIFICATION FOR CLAIMS AND LIABILITY

The Hattiesburg Convention Commission shall be indemnified by the City of Hattiesburg for any and all damages to property or persons and shall save harmless its officers, agents, and employees from all suits, claims, actions, or damages of any nature whatsoever resulting from the performance of work under this contract or any pre-existing conditions and decisions of this project; provided however, this indemnification shall not extend to negligent acts or omissions of the Hattiesburg Convention Commission.

The City shall be indemnified by the Hattiesburg Convention Commission for any and all damages to property or persons, and it and its officers, agents, and employees shall be held harmless from all suits, claims,

actions, or damages of any nature whatsoever resulting from the performance of duties under this contract or any pre-existing conditions of the Hattiesburg Convention Commission; provided however, this indemnification shall not extend to negligent acts or omissions of the City of Hattiesburg.

Article VIII

ASSIGNMENT OR TRANSFER

The Hattiesburg Convention Commission agrees not to assign or transfer this contract in whole without prior written approval of the City. The Hattiesburg Convention Commission reserves the right to assign specific performance functions named in this contract to privately contracted firms as it deems appropriate. The Hattiesburg Convention Commission agrees that said assignment does not waive its responsibilities or obligations under the terms of this agreement.

Article IX

COVENANTS BINDING UPON SUCCESSORS AND ASSIGNS

The covenants herein contained shall, except as otherwise indicated, accrue to the benefit of and be binding upon the successors and assigns of the parties hereto.

IN WITNESS WHEREOF, said parties have hereto set their hands the day and year above first written.

HATTIESBURG CONVENTION COMMISSION
One Convention Center Plaza
Hattiesburg, MS 39401

By: _____
Andy Stetelman
Chairman, H'bg Convention Commission

Date: 11-6-12

CITY OF HATTIESBURG
P.O. Box 1898
Hattiesburg, MS 39403-1898

By: _____
Johnny DuPree
Mayor, City of Hattiesburg

Date: 11-6-12

Appendix A

DEFINITION

The term "facilities" as used herein, shall mean all structures and improvements planned, developed and operated under the project entitled, "East Sixth Street USO Club & Museum."

FACILITY AND MUSEUM DEVELOPMENT

1) **Project Analyses** - The Hattiesburg Convention Commission will, from existing and subsequent analyses, develop a comprehensive summary of user needs for the development. This will include, but is not limited to, user needs and civic aspirations, planning and evaluation of ancillary development on the property for incorporation into overall facility program, neighborhood considerations and tourism development aspects.

2) **Venue Development** - As the Hattiesburg Convention Commission determines appropriate and productive, in conjunction with the City of Hattiesburg, African-American Military History Museum Committee and other user groups, it will evaluate and implement appropriate construction, installation and modification of the facility to improve its effectiveness as a museum, tourism venue and historical structure. Said activities will occur with respect to project's attractiveness to the neighborhood, Historic Downtown area and community as a whole. The Hattiesburg Convention Commission agrees any significant modifications will be discussed and reviewed with the architect of record and/or MS Department of Archives and History to preserve the historical accuracy of the facility.

FACILITY AND MUSEUM OPERATIONS

3) **Operational Structure** - The Hattiesburg Convention Commission will utilize existing knowledge and expertise of its staff currently allocated to the Commission venues to encourage economies of scale with regard to Maintenance, Event Operations and Marketing. Additionally, the Commission will provide a professional museum curator able to develop the historical and museum components of this facility as well as the Historic Eureka School.

4) **Staffing of Facility** - The Hattiesburg Convention Commission, or its contracted private management entity, will review and establish appropriate staffing requirements and seek to fill available full-time, part-time and contractual staff positions. The Hattiesburg Convention Commission and its agents maintain policies and practices that are designed to prevent discrimination against any qualified employee or applicant on the basis of race, color, religion, ancestry, national origin, sex, age, marital status, sexual orientation, disability and medical condition to the extent protected by law. This policy of nondiscrimination applies to all employment practices, including hiring, compensation, benefits, promotion, training, and termination.

   Specific human resource activities will include...

   a- Establish appropriate staffing requirements for successful venue and museum operations.
   b- Develop (as appropriate) for each position:

1- Job description
2- Specific duties
3- Performance criteria
4- Financial compensation range (inclusive of benefits)
5- Schedule/hours of work

c- Advertise positions in accordance with applicable law and policy.
e- Conduct employee interview process as required.
f- Provide orientation program for new employees.
g- Provide on-going training and development program for venue and museum staff.
h- Conduct performance evaluations as required.

5) **Operations Sub-Contracting** - The Hattiesburg Convention Commission will evaluate fixed and optional sub-contracted operational contracts for the venue. Hattiesburg Convention Commission will review and negotiate sub-contracted operational activities, as appropriate.

a- Identify specific venue operational components requiring fixed or sub-contracted performance.
b- Investigate and review industry standards, recommendations and historical data for contracted and fixed operational components.
c- Develop and review policies and procedure for proposed sub-contracted components of venue. This can include...Term of contract, performance bonding, control aspects, exclusivity clauses, types of services, operating conditions, hours of operation, license fees, audit and accounting controls, taxes and fees, operational surcharges, workers compensation, utility usage, termination clauses, subordination clauses, amendments, surety bonds, personnel practices, personnel training requirements, uniforms, work performance evaluations, inventory and control, equipment maintenance and usage, business ethics, quality and value, wage scales, endorsements and advertising.

6) **Booking and Event Management** - The Hattiesburg Convention Commission will develop, administer and oversee all booking and event management services for East Sixth Street USO Club & Museum during the terms of this contract. This will include Facility Marketing (see appropriate section), booking and reserving of venue and management of events.

a- Research and develop sales and booking policies.
b- Utilize existing booking and event management software and staff.
c- Implement integrated event management accounting and reservations program.
d- Develop, review and produce venue use agreement and contracts.
e- Develop event management policies and procedures. This may include, crowd control, security, ADA accessibility, public and restricted entry, food and beverage management, event coordination plan, equipment distribution, etc.
f- Develop on-call staffing requirements and database of providers.
g- Begin equipment inventory program for event-related equipment.
h- Develop site tour program.
i- Develop facility safety program.

MUSEUM MARKETING

7) **Market Analysis** - The Hattiesburg Convention Commission will identify potential clients and target markets for marketing of the Museum, including educational, African-American, military and historical tourism audiences. In addition, the Hattiesburg Convention Commission will conduct an annual review and analysis of national, regional and state industry tourism and museum trends.

Specific components include...

1) Build Potential user database based upon
   a) Seasonality
   b) Frequency of Tours
   c) Group Size
   d) Type of Audience

2) Targets within the Educational Markets
   a) University
   b) Elementary Schools
   c) Secondary Schools
   d) High Schools
   e) Kindergartens
   f) Private Schools

3) Targets within the Historical and Motorcoach Markets
   a) Military Tours (including regional, African-American, WWII, etc.)
   b) Military Reunions
   c) African-American Tourism
   d) Civil Rights Tourism
      e) Hattiesburg-focused Reunions
      f) Educational Reunions

8) **Market Planning** - The Hattiesburg Convention Commission will develop a comprehensive marketing strategy, a specific marketing plan and an overall marketing budget on an annual basis.

Specific Components include...

1) Development of a dynamic long term Marketing Overview based on ongoing market analysis.
2) Develop annual market plan based on long-term objectives.
3) Develop annual marketing budget.

9) **Marketing Activities** - The Hattiesburg Convention Commission will coordinate the production of marketing and collateral materials, develop contracts with potential clients, establish annual advertising campaigns including space ads, direct mail and familiarization tours.

Specific Components include...

1) Coordination of Marketing and Collateral Material production
   a) Media Kits - Develop up-to-date media kits on an ongoing basis.
   b) Venue Information Package - Package to include marketing/tour booklet, diagrams of site plan and general facility data.
   c) Facility Contracts - Develop comprehensive booking contracts and use policies.

2) Develop Marketing Network
   a) Joining Various Professional Groups
      Which may include...
      aa) State Historical Associations
      bb) National Historical Associations
      cc) African-American Military Associations
      dd) Historical Military Associations
      ee) State Museum Associations
      ff) African-American Tourism Associations

3) Develop Marketing Programs including...
   a) Cooperative Advertisement
   b) Incentives
   c) Value-Added Tour Packages
   d) Electronic Media Sources
      aa) Expand Web Site

4) Media Open House
   a) Develop Mailing List
   b) Develop and produce Media Packet

5) Set Up Familiarization Tour Plan

10) **Marketing Evaluation** - The Hattiesburg Convention Commission will provide a plan for ongoing evaluation of factors which will materially affect the viability of and promote the success of the East Sixth Street USO Club & Museum. This will include monitoring of trends, review of marketing and service programs, recommendations for modification and enhancement of existing programs.

1) Post Tour Surveys
   a) Develop Post Tour Survey
   b) Conduct interval Post Tour Evaluation Programs
   c) Identify financial impacts including cost/benefits analysis for Museum and local economy

2) Review, Discussion and Improvement of annual Marketing Programs

City of Hattiesburg, MS

200 Forrest St.
P.O. Box 1898
Hattiesburg, MS 39401

Master

File Number: 2012-1283

File ID:	2012-1283	**Type:**	Regular Agenda Item	**Status:**	Agenda Ready
Version:	1	**Reference:**		**In Control:**	City Council
				File Created:	10/23/2012
Brief Title:	State Fire Academy Contract 2012			**Final Action:**	11/06/2012
				Minute Book Number:	MB2012-1/381

Title:

Authorize Mayor to execute agreement between the Mississippi State Fire Academy (MSFA), the Hattiesburg Fire Department and Petal Fire Department to administer the NFPA 1041 Fire Instructor LEVEL I Course Curriculum.

Notes:

Sponsors:		**Enactment Date:**	
Attachments:	State Fire Academy Contract 20121, State Fire Academy Contract 20121	**Enactment Number:**	
Contact:		**Meeting Date:**	
Drafter:	Linda Montgomery	**Effective Date:**	

History of Legislative File

Version:	Acting Body:	Date:	Action:	Sent To:	Due Date:	Return Date:	Result:
1	City Council	11/06/2012	Authorize				Pass

Action Text: A MOTION was made by Council Member Naylor and seconded by Council Vice President Ware to Authorize Mayor to execute agreement between the Mississippi State Fire Academy (MSFA), the Hattiesburg Fire Department and Petal Fire Department to administer the NFPA 1041 Fire Instructor LEVEL I Course Curriculum.

There being no discussion, the Motion received the affirmative vote of the Council as follows:

Yeas: 5 - Bradley, Delgado, Carroll, Ware and Naylor

Nays: 0

Yea: 5 President Bradley
Council Member Delgado
Council Member Carroll
Vice President Ware
Council Member Naylor

ΓEL-No Vote: 0

Text of Legislative File 2012-1283

Title

Authorize Mayor to execute agreement between the Mississippi State Fire Academy (MSFA), the Hattiesburg Fire Department and Petal Fire Department to administer the NFPA 1041 Fire Instructor LEVEL I Course Curriculum.

Summary

Agreement 10-15-12 NFPA 1041 Fire Instructor LEVEL I Course Curriculum

Budget Information

..Expenditure Type

..Purchasing Item

Contract

..Publication Information

Expenditure Type

..Purchasing Item

Contract

..Publication Information

Purchasing Item

Contract

..Publication Information

Publication Information

STATE FIRE ACADEMY

Division of the Mississippi Insurance Department
#1 FIRE ACADEMY U.S.A.
JACKSON, MISSISSIPPI 39208-9600
Phone: (601) 932-2444

Reggie Bell
Executive Director

Mike Chaney
Insurance Commissioner

Memorandum of Understanding

This Memorandum of Understanding is entered into between the Mississippi State Fire Academy (MSFA), #1 Fire Academy USA, Jackson, MS 39208 (Rankin County Mississippi) and the following Customer:

Customer Name:	**Hattiesburg Fire Department**
Address:	**53rd Academy Drive**
City, State Zip:	**Hattiesburg, Ms 39401**
Phone:	
Fax:	**601-545-4652**
Federal ID Number:	
Contact Person/Title:	**David Webster, Fire Chief**
Email Address:	

1. DATE(S) OF SERVICE: **October 2012**

2. LOCATION FOR SERVICE TO BE PERFORMED: **Hattiesburg Fire Department**

3. DESCRIPTION OF SERVICE TO BE PROVIDED TO CUSTOMER: (Course Name and Description, Course Hours, Certificates Issued, Dorm/Meals/Books if Applicable, etc.)

Academy staff is to provide the field course curriculum of NFPA 1041 Fire Instructor LEVEL I. The course will consist of 45 hours. The academy staff will test ONE (1) module scheduled which will be in the same format as on-campus programs. The course must be completed within six (6) months of the official start time set by the program manager at MSFA. Certificates will be issued to those successfully completing level I.

All documents and curriculum provide to the Hattiesburg Fire Department from the Mississippi Fire Academy is property of the Academy and cannot be duplicated for use outside of this delivery.

4: NUMBER OF STUDENTS THIS MEMORANDUM OF UNDERSTANDING APPLIES TO: _11____

5. SERVICE FEE: **Total Cost: $864.00**
Hattiesburg FD – 8 Students at $78.55 = $628.40
Petal FD – 3 Students at $78.55 = $235.65

If a Purchase Order is required for this service, indicate so and provide a purchase order number and/or copy of the purchase order:

Please note that if there is more than one department/organization entering this agreement for this course and the fee is split between the departments/organizations, the cost per student is based on the provided number of students. If the number of students from participating departments/organizations changes, the cost per student will change. However, the total of the fees will equal the total cost above and will be split between the participating departments/organizations.

If on Academy campus Monday through Thursday, are meals to be provided: ☐ Yes ☐ No ☒ N/A If Yes, indicate which meals are provided: ____Breakfast served 6:30 a.m. to 7:15 a.m _____Lunch served 11:30 a.m. to 12:45 p.m.

If on Academy campus Monday through Thursday, are dorm rooms requested: ☐ Yes _____Rooms ☐ No ☒ N/A

Note: An invoice will be submitted to the customer upon completion of the service. If a purchase order number is required from your company, please fill in the appropriate blocks on this form. Payment for services is due within thirty (30) days of completion of services and receipt of invoice.

MISSISSIPPI FIRE ACADEMY
Fax: (601) 932-2819
E-Mail: fireacademy@msfa.state.ms.us
Home Page: http://www.mid.state.ms.us/fireacad

6. MODIFICATION, AMENDMENT, OR TERMINATION OF AGREEMENT:
Modifications, amendments, or termination of the Memorandum of Understanding may be made upon mutual agreement of both parties but must be in writing and signed by both parties. This Agreement may be terminated by the Academy upon written notice to the Customer should the Academy be subject to governmental budgetary cuts or if personnel cuts limit the amount of available manpower necessary to execute the professional service

7. INSURANCE:
Customer represents that it will maintain workers' compensation insurance as prescribed by law that will inure to the benefit of the customer's personnel, as well as comprehensive general liability insurance. The Academy represents that it maintains workers compensation insurance for Academy personnel during the course of their official duties. Further, the Academy represents that as a state agency, the Mississippi Tort Claims Board views the organization as a sub-agency of the Mississippi Insurance Department. The Mississippi Insurance Department is certified by the Mississippi Tort Claims Board by participating in the Mississippi Tort Claims Fund as set forth in Chapter 46, Title 11, Mississippi Code 1972, as amended. This fund provides protection for tort claims against state employees and agencies subject to terms and limitations established by law while in the scope of their duties.

8. GOVERNING LAW:
This Agreement will be construed and governed in accordance with the laws of the State of Mississippi excluding its conflicts of laws provisions, and any litigation with respect thereto shall be brought in the courts of the State.

9. ACADEMY COURSE MATERIAL IS PROTECTED PROPERTY:
Academy course instructional material (lesson plans, power point presentations, handouts, skills check offs, etc.) shall be considered Protected Property belonging to the Academy. If part of this agreement is to provide the Customer this information for performance of this agreement, the Customer shall not copy, duplicate, transcribe, or any other form of duplication, in whole or in part, any course material submitted to them for use in fulfilling this Memorandum of Understanding, either directly or indirectly, for personal benefit, the benefit of another, or for future use. This statement of policy shall continue to be in effect whether or not the Agreement is terminated or has expired. Additionally, if any state property is utilized as part of this agreement, the Customer assures proper custody and care of the property (withstanding normal use and wear and tear).

10. ACKNOWLEDGEMENT OF MEMORANDUM OF UNDERSTANDING:
This constitutes the entire agreement of both parties with respect to the subject matter contained herein and supersedes and replaces any and all prior negotiations, understandings and agreements, written or oral, between the parties relating thereto. For the faithful performance of the terms of this agreement, the parties hereto have caused this Agreement to be executed by their undersigned authorized representatives.

PARTIES IN AGREEMENT:

Mississippi State Fire Academy
Authorized Personnel: Reggie Bell, Executive Director
Authorized Personnel: Pam Ladner, Office Director

Reggie Bell 10/15/12
Signature/Date

Pam Ladner 10-15-2012
Signature/Date

Academy Contact Regarding this Agreement:
Daniel Cross, Instructor Chief
Telephone: 601-932-2444
Email: dcross@msfa.state.ms.us

Customer: Hattiesburg Fire Department
Authorized Personnel: David Webster
Title: Fire Chief
Authorized Personnel:

Signature/Date

Optional Signature/Date:

If a Purchase Order is required for this service, indicate so and provide a purchase order number and/or copy of the purchase order:

Customer Invoicing/Billing Address:

Contact Name:
Contact Phone Number:

Please fax to 601-932-2819 and mail the original signature document to the Fire Academy at the following address:
Pam Ladner, Office Director
State Fire Academy
#1 Fire Academy USA Jackson MS 39208-9600

STATE FIRE ACADEMY

Division of the Mississippi Insurance Department
#1 FIRE ACADEMY U.S.A.
JACKSON, MISSISSIPPI 39208-9600
Phone: (601) 932-2444

Reggie Bell
Executive Director

Mike Chaney
Insurance Commissioner

Memorandum of Understanding

This Memorandum of Understanding is entered into between the Mississippi State Fire Academy (MSFA), #1 Fire Academy USA, Jackson, MS 39208 (Rankin County Mississippi) and the following Customer:

Customer Name:	**Hattiesburg Fire Department**
Address:	**53rd Academy Drive**
City, State Zip:	**Hattiesburg, Ms 39401**
Phone:	
Fax:	**601-545-4652**
Federal ID Number:	
Contact Person/Title:	**David Webster, Fire Chief**
Email Address:	

1. DATE(S) OF SERVICE: **October 2012**

2. LOCATION FOR SERVICE TO BE PERFORMED: **Hattiesburg Fire Department**

3. DESCRIPTION OF SERVICE TO BE PROVIDED TO CUSTOMER: (Course Name and Description, Course Hours, Certificates Issued, Dorm/Meals/Books if Applicable, etc.)

Academy staff is to provide the field course curriculum of NFPA 1041 Fire Instructor LEVEL I. The course will consist of 45 hours. The academy staff will test ONE (1) module scheduled which will be in the same format as on-campus programs. The course must be completed within six (6) months of the official start time set by the program manager at MSFA. Certificates will be issued to those successfully completing level I.

All documents and curriculum provide to the Hattiesburg Fire Department from the Mississippi Fire Academy is property of the Academy and cannot be duplicated for use outside of this delivery.

4: NUMBER OF STUDENTS THIS MEMORANDUM OF UNDERSTANDING APPLIES TO: _11____

5. SERVICE FEE: **Total Cost: $864.00**
Hattiesburg FD – 8 Students at $78.55 = $628.40
Petal FD – 3 Students at $78.55 = $235.65

If a Purchase Order is required for this service, indicate so and provide a purchase order number and/or copy of the purchase order:

Please note that if there is more than one department/organization entering this agreement for this course and the fee is split between the departments/organizations, the cost per student is based on the provided number of students. If the number of students from participating departments/organizations changes, the cost per student will change. However, the total of the fees will equal the total cost above and will be split between the participating departments/organizations.

If on Academy campus Monday through Thursday, are meals to be provided: ☐ Yes ☐ No ☒ N/A If Yes, indicate which meals are provided: ____Breakfast served 6:30 a.m. to 7:15 a.m _____Lunch served 11:30 a.m. to 12:45 p.m.

If on Academy campus Monday through Thursday, are dorm rooms requested: ☐ Yes _____Rooms ☐ No ☒ N/A

Note: An invoice will be submitted to the customer upon completion of the service. If a purchase order number is required from your company, please fill in the appropriate blocks on this form. Payment for services is due within thirty (30) days of completion of services and receipt of invoice.

MISSISSIPPI FIRE ACADEMY
Fax: (601) 932-2819
E-Mail: fireacademy@msfa.state.ms.us
Home Page: http://www.mid.state.ms.us/fireacad

6. MODIFICATION, AMENDMENT, OR TERMINATION OF AGREEMENT:
Modifications, amendments, or termination of the Memorandum of Understanding may be made upon mutual agreement of both parties but must be in writing and signed by both parties. This Agreement may be terminated by the Academy upon written notice to the Customer should the Academy be subject to governmental budgetary cuts or if personnel cuts limit the amount of available manpower necessary to execute the professional service

7. INSURANCE:
Customer represents that it will maintain workers' compensation insurance as prescribed by law that will inure to the benefit of the customer's personnel, as well as comprehensive general liability insurance. The Academy represents that it maintains workers compensation insurance for Academy personnel during the course of their official duties. Further, the Academy represents that as a state agency, the Mississippi Tort Claims Board views the organization as a sub-agency of the Mississippi Insurance Department. The Mississippi Insurance Department is certified by the Mississippi Tort Claims Board by participating in the Mississippi Tort Claims Fund as set forth in Chapter 46, Title 11, Mississippi Code 1972, as amended. This fund provides protection for tort claims against state employees and agencies subject to terms and limitations established by law while in the scope of their duties.

8. GOVERNING LAW:
This Agreement will be construed and governed in accordance with the laws of the State of Mississippi excluding its conflicts of laws provisions, and any litigation with respect thereto shall be brought in the courts of the State.

9. ACADEMY COURSE MATERIAL IS PROTECTED PROPERTY:
Academy course instructional material (lesson plans, power point presentations, handouts, skills check offs, etc.) shall be considered Protected Property belonging to the Academy. If part of this agreement is to provide the Customer this information for performance of this agreement, the Customer shall not copy, duplicate, transcribe, or any other form of duplication, in whole or in part, any course material submitted to them for use in fulfilling this Memorandum of Understanding, either directly or indirectly, for personal benefit, the benefit of another, or for future use. This statement of policy shall continue to be in effect whether or not the Agreement is terminated or has expired. Additionally, if any state property is utilized as part of this agreement, the Customer assures proper custody and care of the property (withstanding normal use and wear and tear).

10. ACKNOWLEDGEMENT OF MEMORANDUM OF UNDERSTANDING:
This constitutes the entire agreement of both parties with respect to the subject matter contained herein and supersedes and replaces any and all prior negotiations, understandings and agreements, written or oral, between the parties relating thereto. For the faithful performance of the terms of this agreement, the parties hereto have caused this Agreement to be executed by their undersigned authorized representatives.

PARTIES IN AGREEMENT:

Mississippi State Fire Academy
Authorized Personnel: Reggie Bell, Executive Director
Authorized Personnel: Pam Ladner, Office Director

Reggie Bell 10/15/12
Signature/Date

Pam Ladner 10-15-2012
Signature/Date

Academy Contact Regarding this Agreement:
Daniel Cross, Instructor Chief
Telephone: 601-932-2444
Email: dcross@msfa.state.ms.us

Customer: Hattiesburg Fire Department
Authorized Personnel: David Webster
Title: Fire Chief
Authorized Personnel:

Signature/Date

Optional Signature/Date:

If a Purchase Order is required for this service, indicate so and provide a purchase order number and/or copy of the purchase order:

Customer Invoicing/Billing Address:

Contact Name:
Contact Phone Number:

Please fax to 601-932-2819 and mail the original signature document to the Fire Academy at the following address:
Pam Ladner, Office Director
State Fire Academy
#1 Fire Academy USA Jackson MS 39208-9600

City of Hattiesburg, MS

200 Forrest St.
P.O. Box 1898
Hattiesburg, MS 39401

Master

File Number: 2012-1314

File ID:	2012-1314	**Type:**	Regular Agenda Item	**Status:**	Agenda Ready
Version:	1	**Reference:**		**In Control:**	City Council
				File Created:	10/30/2012
Brief Title:	Rescind Addendum to Professional Services Contract with Neel-Schaffer, Inc. approved October 2, 2012, and approve new contract for preliminary engineering services for the Woodley Elementary Safe Routes to School project.			**Final Action:**	11/06/2012
				Minute Book Number:	MB2012-1/381

Title:

Rescind the Addendum to the Professional Services Contract between the City of Hattiesburg and Neel-Schaffer, Inc. approved October 2, 2012 at Minute Book number 2012-1/328; Approve Preliminary Engineering Services Contract with Neel-Schaffer, Inc. for the Safe Routes to School - Woodley Elementary project (Project No. SRSP-0210-00(024) LPA 106139-411000) subject to MDOT concurrence; Authorize Mayor to execute same.

Notes:

Sponsors:		**Enactment Date:**	
Attachments:	Consultant Contract No. 2, executed Consultant Contract No. 2	**Enactment Number:**	
Contact:		**Meeting Date:**	11/06/2012
Drafter:	Sharon Waits	**Effective Date:**	

History of Legislative File

Version:	Acting Body:	Date:	Action:	Sent To:	Due Date:	Return Date:	Result:
1	City Council	11/06/2012	Rescind				Pass

Action Text: A MOTION was made by Council Member Naylor and seconded by Council Vice President Ware to Rescind the Addendum to the Professional Services Contract between the City of Hattiesburg and Neel-Schaffer, Inc. approved October 2, 2012 at Minute Book number 2012-1/328; Approve Preliminary Engineering Services Contract with Neel-Schaffer, Inc. for the Safe Routes to School - Woodley Elementary project (Project No. SRSP-0210-00(024) LPA 106139-411000) subject to MDOT concurrence; Authorize Mayor to execute same.

There being no discussion, the Motion received the affirmative vote of the Council as follows:

Yeas: 5 - Bradley, Delgado, Carroll, Ware and Naylor

Nays: 0

Yea: 5 President Bradley
Council Member Delgado
Council Member Carroll
Vice President Ware
Council Member Naylor

ΓEL-No Vote: 0

Text of Legislative File 2012-1314

Title

Rescind the Addendum to the Professional Services Contract between the City of Hattiesburg and Neel-Schaffer, Inc. approved October 2, 2012 at Minute Book number 2012-1/328; Approve Preliminary Engineering Services Contract with Neel-Schaffer, Inc. for the Safe Routes to School - Woodley Elementary project (Project No. SRSP-0210-00(024) LPA 106139-411000) subject to MDOT concurrence; Authorize Mayor to execute same.

Summary

Rescind the Addendum to the Professional Services Contract between the City of Hattiesburg and Neel-Schaffer, Inc. approved October 2, 2012 at Minute Book number 2012-1/328; Approve Preliminary Engineering Services Contract with Neel-Schaffer, Inc. for the Safe Routes to School - Woodley Elementary project (Project No. SRSP-0210-00(024) LPA 106139-411000) subject to MDOT concurrence; Authorize Mayor to execute same.

Budget Information

No budget impact

Expenditure Type

Purchasing Item

Publication Information

ESC
Rev. 08/28/94 (Base)
Rev. 02-20-2011 (This form)

PRELIMINARY ENGINEERING SERVICES CONTRACT

Woodley Elementary, Hattiesburg Safe Routes to School
Project No. SRSP-0210-00(024)LPA/106139-411000
Forrest County

THIS CONTRACT, is made and entered into by and between the ***City of Hattiesburg***, a body Corporate of the State of Mississippi (the "LPA"), and, ***Neel-Schaffer, Inc.*** (the "CONSULTANT"), a ***Mississippi*** Corporation, duly registered to do business in the State of Mississippi, whose address for mailing is ***704 Hardy Street, Hattiesburg, MS 39401,*** effective as of the date of latest execution below.

WITNESSETH:

WHEREAS, the LPA proposes to perform services in preparing construction plans for sidewalks at Woodley Elementary, as provided for in Project No. ***SRSP-0210-00(024)LPA/106139-411000*** which includes sidewalk along 21st Avenue from Quinn Street to Hardy Street, sidewalk along O'Ferral Street from 23rd Avenue to 21st Avenue and from 20th Avenue to Patton Avenue, and sidewalk along Pearl Street from 22nd Avenue to 21st Avenue, hereinafter called the "PROJECT"; and,

WHEREAS, the LPA desires to engage a qualified and experienced CONSULTANT to perform engineering services in connection with the PROJECT, all of which are hereinafter called the "SERVICES"; and,

WHEREAS, the CONSULTANT has represented to the LPA that it is experienced and qualified to provide those services, and the LPA has relied upon such representation; and,

WHEREAS, the CONSULTANT herein was chosen for their expertise in performing the services in connection with the PROJECT and found satisfactory by the LPA; which is now desirous of entering into a contract;

WHEREAS, the CONSULTANT herein was chosen through the Consultant Selection Process pursuant to Mississippi Department of Transportation (hereinafter "MDOT") Standard Operating Procedure ADM-24-01-00-000; (March 1, 2001, as amended) and Federal Aid Policy Guide Part 172 and found satisfactory; to the end that both parties are now desirous of entering into a contract; and

NOW, THEREFORE, for and in consideration of the mutual promises and covenants contained herein and for other good and valuable considerations flowing unto the parties, the receipt and sufficiency of which is hereby acknowledged, the LPA and the CONSULTANT do hereby contract and agree as follows:

ARTICLE I. GENERAL RECITALS

CONSULTANT shall, for the agreed fees, furnish all engineering services and materials required to perform the tasks described in the Scope of Work for the proposed transportation project. In so doing, CONSULTANT shall meet the current industry standards as to general format and content and in addition thereto, any special requirements of the LPA.

THE LPA, in support of CONSULTANT will provide the CONSULTANT a Scope of Work shown in "Exhibit 2" hereto and any other data which may be of assistance to CONSULTANT and within the possession and control of the LPA.

Manuals, guides, and specifications applicable to this CONTRACT shall be those approved and/or adopted by MDOT and in effect on the effective date of this CONTRACT, unless otherwise specified in this Contract or subsequently directed by MDOT during the course of the CONTRACT.

ARTICLE II. SCOPE OF WORK

The CONSULTANT shall conduct the SERVICES in accordance with the Scope of Work attached to this CONTRACT as "Exhibit 2" and made a part hereof as if fully set forth herein. The performance of the SERVICES referred to in "Exhibit 2" shall be the primary basis for measurement of performance under this CONTRACT. The LPA specifically reserves the right and privilege to enlarge or reduce the scope; or to cancel this CONTRACT at any time.

ARTICLE III. CONTRACT TERM

This CONTRACT shall commence upon the latest date of execution below and continue until such time as the above named project is successfully completed to the satisfaction of the LPA or until ***the 31st of July 2013, 5:00 PM*** CDT, at which time this CONTRACT shall absolutely and finally terminate.

During the term of this CONTRACT, the LPA reserves the right to terminate this CONTRACT in whole or in part, at any time, with or without cause, upon seven (7) days written notice to the CONSULTANT, notwithstanding any just claims by the CONSULTANT for payment of SERVICES rendered prior to the date of termination. The LPA shall be liable only for the costs, fees and expenses for demobilization and close out of contract, based on actual time and expenses incurred by CONSULTANT in the packaging and shipment of all documents covered by this CONTRACT to the LPA. In no event shall the LPA be liable for lost profits or other consequential damages.

ARTICLE IV. TIME OF PERFORMANCE

TIME IS OF THE ESSENCE IN THIS CONTRACT. The CONSULTANT shall be prepared to perform its responsibilities for providing SERVICES commencing on the date of execution of the CONTRACT.

The CONSULTANT has submitted a proposed project schedule to the LPA which has been incorporated herein as a part of "Exhibit 2", which when approved by final execution of this CONTRACT shall control the evaluation of the CONSULTANT's progress on this PROJECT. A copy of the progress schedule, indicating the actual time expended on specific portions of this project, shall be submitted along with an estimated percentage completed with each monthly statement.

A Notice to Proceed shall be issued under authority from the LPA within 30 days after final execution of this CONTRACT. The CONSULTANT may not begin work on any feature of this PROJECT prior to receiving a Notice to Proceed from the LPA.

ARTICLE V. RELATIONSHIP OF THE PARTIES

The relationship of the CONSULTANT to the LPA is that of an independent contractor, and said CONSULTANT, in accordance with its status as an independent contractor, covenants and agrees that it will conduct itself consistent with such status, that it will neither hold itself out as, nor claim to be, an officer or employee of the LPA by reason hereof. The CONSULTANT will not by reason hereof, make any claim, demand or application or for any right or privilege applicable to an officer or employee of the LPA, including but not limited to workers' compensation coverage, unemployment insurance benefits, social security coverage, retirement membership or credit, or any form of tax withholding whatsoever.

All notices, communications, and correspondence between the LPA and the CONSULTANT shall be directed to the key personnel and agents designated in this contract.

ARTICLE VI. COMPENSATION, BILLING & AUDIT

A. Cost and Fees

The CONSULTANT shall be paid on the basis set forth in "Exhibit 3" to this CONTRACT. Under no circumstances shall the LPA be liable for any amounts, including any costs, which exceed the maximum dollar amount of compensation that is specified in and set forth in "Exhibit 3".

B. Monthly Billing

The CONSULTANT may submit monthly billing to the LPA. (A sample of a preferred invoice is attached as "Exhibit 4".) Each billing shall include all time and allowable expenses through the end of the billing period. Direct expenses, as used herein, include the costs of travel, subsistence, shipping charges, long distance telephone calls and printing if it is not company accounting policy to include these costs in overhead rates. The LPA retains the right to verify time and expense records by audit of any or all CONSULTANT's time and accounting records at any time during the life of the CONTRACT and up to three years thereafter.

If SERVICES are rendered within a given State fiscal year, an invoice requesting payment from the CONSULTANT shall be presented to the LPA within 60 days of the end of the State fiscal year. **Should the CONSULTANT fail to present the invoice within the allotted time, legislative approval may be required before payment can be rendered.**

The CONSULTANT further agrees that FHWA or any other Federal Agency may audit the same records at any time during the life of the CONTRACT and up to three years thereafter, should the funding source for all or any part of the CONTRACT be funds of the United States of America.

C. Record Retention

The CONSULTANT shall maintain all time and expense records incurred on the PROJECT and used in support of its proposal and shall make such material available at all reasonable times during the period of the CONTRACT and for three years from the date of final payment under this CONTRACT for inspection by the LPA, and copies thereof shall be furnished upon request, at the LPA's expense. The CONSULTANT agrees that the provisions of this Article shall be included in any CONTRACT it may make with any subcontractors, assignees or transferees.

D. Retainage

The LPA shall retain the final 25% of the CONSULTANT's Fixed Fee until the final payment request has been received and an audit of the total PROJECT cost to date has been completed by the LPA or its designee.

ARTICLE VII. FINAL PAYMENT

The CONSULTANT shall clearly indicate on its last Invoice for the CONTRACT that the Invoice is "FINAL". The LPA will confirm that the CONTRACT is ready to be closed and the "FINAL" Invoice may be paid. All "FINAL" invoices shall pay any retainage withheld on the CONTRACT. However, under no circumstances will the total amount paid exceed the maximum not to exceed amount established for the CONTRACT. The CONSULTANT agrees that acceptance of the final payment shall be in full and final settlement of all claims arising against the LPA for work done, documents furnished, cost incurred, or otherwise arising out of this CONTRACT and shall release the LPA from any and all further claims of whatever nature, whether known or unknown, for and on account of said CONTRACT, including payment for any and all work done, and labor and material furnished in connection with the same. Errors and/or omissions discovered subsequent to the acceptance by the LPA of the final contract documents shall be corrected by the CONSULTANT without additional compensation. The CONSULTANT shall submit their "FINAL" invoice no later than 45 days following termination of the CONTRACT.

ARTICLE VIII. REVIEW OF WORK

Authorized representatives of the LPA may at all reasonable times review and inspect the SERVICES under this CONTRACT and any addenda or amendments thereto. Authorized representatives of the FHWA may also review and inspect the SERVICES under this CONTRACT should funds of the United States of America be in any way utilized in payment for said SERVICES. Such inspection shall not make the United States of America a party to this CONTRACT, nor will FHWA interfere with the rights of either party hereunder.

All reports, drawings, studies and maps prepared by and for the CONSULTANT, shall be made available to authorized representatives of the LPA for inspection and review at all reasonable times in the General Offices of the LPA. Authorized representatives of the FHWA may also review and inspect said reports, drawings, studies and maps prepared under the CONTRACT should funds of the United States of America be in any way utilized in payment for the same. Acceptance by the LPA shall not relieve the CONSULTANT of its professional obligation to correct, at its expense, any of its breaches, errors and/or omissions, in the final version of the work.

The CONSULTANT shall be responsible for performance of and compliance with all terms of this CONTRACT, including the Scope of Work and other exhibits, and including any technical specifications and special requirements of the LPA, and shall be responsible for errors and/or omissions, including those as to conduct and care, format and content, for all aspects of the CONTRACT, and including professional quality and technical accuracy of all designs, drawings, specifications, and other services furnished by the CONSULTANT.

Failure to comply with any terms of this CONTRACT shall be corrected by the CONSULTANT without additional compensation.

If any breach of CONTRACT, is discovered by LPA personnel after final acceptance of the work by the LPA, then the CONSULTANT shall, without additional compensation, cure any deficiency or breach including errors and/or omissions in designs, plans, drawings, specifications, or other services.

In the event that the project schedule requires that a breach of this CONTRACT be corrected by someone other than the CONSULTANT then the actual costs incurred by the LPA for such corrections shall be the responsibility of the CONSULTANT. The LPA shall give the CONSULTANT an opportunity to correct said breach unless (1) the LPA determines, in its sole discretion, that the CONSULTANT cannot cure the breach within the schedule established by the LPA, or (2) the LPA determines, in its sole discretion, that the CONSULTANT cannot cure the breach to the satisfaction of the LPA.

In the event that the CONSULTANT breaches this CONTRACT, and the breaches of the CONSULTANT are discovered during the construction phase, then an accounting of all costs incurred by the LPA resulting from such breach, including errors and/or omissions, will be made and such amount will be recovered from the CONSULTANT.

ARTICLE IX. RESPONSIBILITIES FOR CLAIMS AND LIABILITY

The CONSULTANT shall indemnify, defend and hold harmless the LPA and all its officers, agents and employees from any claim, loss, damage, cost, charge or expense arising out of any negligent act, actions, neglect or omission by the CONSULTANT, its agents, employees, or subcontractors during the performance of this CONTRACT, whether direct or indirect, and whether to any person or property for which LPA or said parties may be subject, except that neither the CONSULTANT nor any of his agents or subcontractors will be liable under this provision for damages arising out of the injury or damage to persons or property solely caused or resulting from the negligence of the LPA or any of its officers, agents or employees.

The CONSULTANT'S obligations under this Article, including the obligations to indemnify, defend, hold harmless, pay reasonable attorney fees or, at the LPA'S option, participate and associate with the LPA in the defense and trial or arbitration of any damage claim, lien or suit and any related settlement negotiations, shall be initiated by the LPA'S notice of claim for indemnification to the CONSULTANT. Only an adjudication or judgment after the highest appeal is exhausted specifically finding the LPA entirely responsible shall excuse performance of this provision by the CONSULTANT. In such case, the LPA shall pay all costs and fees related to this obligation and its enforcement. Should there be a finding of dual or multiple liability, costs and fees shall be apportioned accordingly.

In conjunction herewith, the LPA agrees to notify CONSULTANT in writing as soon as practicable after receipt or notice of any claim involving CONSULTANT. These indemnities shall not be limited by reason of the listing of any insurance coverage below.

ARTICLE X. INSURANCE

Prior to beginning the work, the CONSULTANT shall obtain and furnish certificates to the LPA for the following minimum amounts of insurance:

A. Workers' Compensation Insurance in accordance with the laws of the State of Mississippi.

B. Public Liability Insurance in an amount not less than one million dollars ($1,000,000.00) on account of any one occurrence.

C. Property Damage Insurance in an amount not less than five hundred thousand dollars ($500,000.00) from damages on account of any one occurrence, with an aggregate limit of not less than one million dollars ($1,000,000.00).

D. Valuable Documents Insurance, whether as a part of the property damage insurance referenced above or as separate insurance, in an amount sufficient to cover all costs associated with repairing, restoring or replacing any documents kept or created by Consultant as a part of the Services, in the event of casualty to, or loss or theft of such documents.

E. Errors and Omissions Insurance, in an amount not less than one million dollars ($1,000,000.00) per incident; one million dollars ($1,000,000.00) aggregate.

F. Comprehensive Automobile Liability Insurance, with a combined single limit for bodily injury and property damage of not less than one million dollars ($1,000,000.00) per incident with respect to CONSULTANT's (owned, hired or non-owned) vehicles, assigned to or used in the performance of services.

The LPA shall be listed as a certificate holder of insurance on any of the insurance required under this CONTRACT.

In the event that the CONSULTANT retains any subcontractor or other personnel to perform SERVICES or carry out any activities under or incident to work on any project or phase of this CONTRACT, CONSULTANT agrees to obtain from said subcontractor or other personnel, certificates of insurance demonstrating that said subcontractor or other personnel has all of the above coverage, or to include said subcontractor or other personnel within CONSULTANT's coverage for the duration of said PROJECT or phase for which said subcontractor or other personnel is employed.

The Insurance coverage recited above shall be maintained in full force and effect by CONSULTANT during the life of this CONTRACT. Should CONSULTANT cease to carry the errors and omissions coverage listed above for any reason, it shall obtain "tail" coverage at the same limits for a period of not less than three (3)

years subsequent to policy termination or contract termination, whichever is longer. Should CONSULTANT change insurance carriers for errors and /or coverage, it shall obtain a "retroactive coverage" endorsement from its new insurance carrier.

Insurance carriers must be properly licensed and/or must hold a Certificate of Authority from the Mississippi Department of Insurance.

A certificate of insurance acceptable to the LPA shall be issued to the LPA by the CONSULTANT prior to the execution of this CONTRACT by the CONSULTANT and thereafter on an annual basis for the duration of this CONTRACT as evidence that policies providing the required coverage, conditions and limits are in full force and effect. Such certificate shall identify this CONTRACT and contain provisions that coverage afforded under the policies will not be cancelled, terminated, or materially altered until at least thirty (30) days prior written notice has been given to the LPA.

The CONSULTANT will furnish certified copies, upon request, of any or all of the policies and/or endorsements to the LPA prior to the execution of this CONTRACT and thereafter on an annual basis for the duration of this CONTRACT.

The CONSULTANT shall provide the LPA any and all documentation necessary to prove compliance with the insurance requirements of this CONTRACT as such documentation is requested, from time to time, by the LPA.

If the CONSULTANT fails to procure or maintain required insurance, the LPA may immediately elect to terminate this CONTRACT or, at its discretion, procure or renew such insurance and pay any and all premiums in connection therewith, and all monies so paid by the LPA shall be repaid by the CONSULTANT to the LPA upon demand, or the LPA may offset the cost of the premiums against any monies due to the CONSULTANT from the LPA.

ARTICLE XI. COVENANT AGAINST CONTINGENT FEES AND LOBBYING

The CONSULTANT shall comply with the relevant requirements of all federal, state or local laws. The CONSULTANT warrants that it has not employed or retained any company or person, other than a bona fide employee working solely for the CONSULTANT, to solicit or secure this CONTRACT, and that it has not paid or agreed to pay any company or person, other than a bona fide employee working solely for the CONSULTANT, any fee commission, percentage, brokerage fee, gifts or any other consideration contingent upon or resulting from the award or making of the CONTRACT. The CONSULTANT warrants that it shall not contribute any money, gift or gratuity of any kind, either directly or indirectly to any employee of the LPA, or to any employee of the Mississippi Department of Transportation. For breach or violation of this warranty, the LPA shall have the right to terminate this CONTRACT without liability, and the CONSULTANT shall forfeit any sums due hereunder at the time of such breach and may be barred from performing any future services for the LPA or participating in any future contracts with the LPA.

ARTICLE XII. EMPLOYMENT OF LPA'S PERSONNEL

The CONSULTANT shall not employ any person or persons in the employ of the LPA for any work required by the terms of this CONTRACT, without the written permission of the LPA, except as may otherwise be provided for herein.

ARTICLES XIII. MODIFICATION

If, prior to the satisfactory completion of the SERVICES under this CONTRACT, the LPA materially alters the scope, character, complexity or duration of the SERVICES from those required under this CONTRACT, a supplemental agreement may be executed between the parties. Also, a supplemental agreement may be executed between the parties in the event that both parties agree the CONSULTANT's compensation

should be increased due to an unanticipated increase in the nature, scope or amount of work necessary to properly provide the SERVICES required on any particular phase or project begun hereunder.

Oral agreements or conversations with the LPA, any individual member of the LPA, officer, agent, or employee of the Mississippi Department of Transportation, either before or after execution of this CONTRACT, shall not affect or modify any of the terms or obligations contained in this CONTRACT. All modifications to this CONTRACT, amendments or addenda thereto must be submitted in writing and signed by the parties thereto before any work is commenced.

The CONSULTANT may not begin work on any modifications, amendments, or addenda prior to receiving a Notice to Proceed.

Minor changes in the proposal which do not involve changes in the compensation, extensions of time or changes in the goals and objectives of the CONTRACT may be made by written notification of such change by either the LPA or the CONSULTANT to the other party, and shall become effective upon written acceptance thereof (i.e. letter agreement).

ARTICLE XIV. SUBLETTING, ASSIGNMENT OR TRANSFER

It is understood by the parties to this CONTRACT that the work of the CONSULTANT is considered personal by the LPA. The CONSULTANT shall not assign, sublet or transfer any or all of its interest in this CONTRACT without prior written approval of the LPA. Under no circumstances will CONSULTANT be allowed to sublet more than 60% of the work required under this contract. It is clearly understood and agreed that specific projects or phases of the work may be sublet in their entirety provided that CONSULTANT performs at least 40% of the overall contract with its own forces. Consent by the LPA to any subcontract shall not relieve CONSULTANT from any of its obligations hereunder, and CONSULTANT is required to maintain final management responsibility with regard to any such subcontract.

The LPA reserves the right to review all subcontract documents prepared in connection with this CONTRACT, and the CONSULTANT agrees that it shall submit to the LPA any proposed subcontract document together with subcontractor cost estimates for review and written concurrence of the LPA in advance of their execution.

ARTICLE XV. OWNERSHIP OF PRODUCTS AND DOCUMENTS AND WORK MADE FOR HIRE

The CONSULTANT agrees that all reports, computer information and access, drawings, studies, notes, maps and other data, prepared by and for them under the terms of this CONTRACT shall be delivered to, become and remain in the property of the LPA upon creation and shall be delivered to the LPA upon termination or completion of work, or upon request of the LPA regardless of any claim or dispute between the parties. All such data shall be delivered within thirty (30) days of receipt of a written request by the LPA.

The CONSULTANT and the LPA intend and agree that this CONTRACT to be a contract for services and each party considers the products and results of the services to be rendered by the CONSULTANT hereunder, including any and all material produced and/or delivered under this CONTRACT (the "Work"), to be a "work made for hire" under U.S. copyright and all applicable laws. The CONSULTANT acknowledges and agrees that the LPA owns all right, title, and interest in and to the Work including, without limitation, the copyright thereto and all trademark, patent, and all intellectual property rights thereto.

If for any reason the Work would not be considered a work made for hire under applicable law, or in the event this CONTRACT is determined to be other than a contract or agreement for a work made for hire, the CONSULTANT does hereby transfer and assign to the LPA, and its successors and assigns, the entire right, title, and interest in and to any Work prepared hereunder including, without limitation, the following:

the copyright and all trademark, patent, and all intellectual property rights in the Work and any registrations and copyright, and/or all other intellectual property, applications relating thereto and any renewals and extensions thereof; all works based upon, derived from, or incorporating the Work; all income, royalties, damages, claims, and payments now or hereafter due or payable with respect thereto; all causes of action, either in law or in equity, for past, present, or future infringement based on the copyrights and/or all other intellectual property; all rights, including all rights to claim priority, corresponding to the foregoing in the United States and its territorial possessions and in all foreign countries. The CONSULTANT agrees to execute all papers and perform such other proper acts as the LPA may deem necessary to secure for the LPA or its designee the rights herein assigned.

The LPA may, without any notice or obligation of further compensation to the CONSULTANT, publish, re-publish, anthologize, use, disseminate, license, or sell the Work in any format or medium now known or hereafter invented or devised. The LPA'S rights shall include, without limitation, the rights to publish, re-publish, or license a third party to publish, re-publish, or sell the Work in print, on the World Wide Web, or in any other electronic or digital format or database now known or hereafter invented or devised, as a separate isolated work or as part of a compilation or other collective work, including a work different in form from the first publication, and to include or license a third party to include the Work in an electronic or digital database or any other medium or format now known or hereafter invented or devised.

The CONSULTANT shall obtain any and all right, title, and interest to all input and/or material from any third party subconsultant, or any other party, who may provide such input and/or material to any portion of the Work so that said right, title, and interest, and all such interest in and to the Work including, without limitation, the copyright thereto and all trademark, patent, and all intellectual property rights thereto, shall belong to the LPA.

For any intellectual property rights currently owned by third parties or by the CONSULTANT and not subject to the terms of this CONTRACT, the CONSULTANT agrees that it will obtain or grant royalty-free, nonexclusive, irrevocable license(s) for or to the LPA at no cost to the LPA to use all copyrighted or copyrightable work(s) and all other intellectual property which is incorporated in the material furnished under this CONTRACT. Further, the CONSULTANT warrants and represents to the LPA that it has obtained or granted any and all such licensing prior to presentation of any Work to the LPA under this CONTRACT. This obligation of the CONSULTANT does not apply to a situation involving a third party who enters a license agreement directly with the LPA.

The CONSULTANT warrants and represents that it has not previously licensed the Work in whole or in part to any third party and that use of the Work in whole or in part will not violate any rights of any kind or nature whatsoever of any third party. The CONSULTANT agrees to indemnify and hold harmless the LPA, its successors, assigns and assignees, and its respective officers, directors, agents and employees, from and against any and all claims, damages, liabilities, costs and expenses (including reasonable attorneys' fees), arising out of or in any way connected with any breach of any representation or warranty made by CONSULTANT herein.

ARTICLE XVI. PUBLICATION AND PUBLICITY

The CONSULTANT agrees that it shall not for any reason whatsoever communicate to any third party, with the exception of the MDOT and the FHWA, in any manner whatsoever concerning any of its CONTRACT work product, its conduct under the CONTRACT, the results or data gathered or processed under this CONTRACT, which includes, but is not limited to, reports, computer information and access, drawings, studies, notes, maps and other data prepared by and for the CONSULTANT under the terms of this CONTRACT, without prior written approval from the LPA, unless such release or disclosure is required by judicial proceeding. The CONSULTANT agrees that it shall immediately refer any third party who requests such information to the LPA and shall also report to the LPA any such third party inquiry, with the exception of the MDOT and/or the FHWA. This Article shall not apply to information in whatever form

that comes into the public domain, nor shall it restrict the CONSULTANT from giving notices required by law or complying with an order to provide information or data when such order is issued by a court, administrative agency or other authority with proper jurisdiction, or if it is reasonably necessary for the CONSULTANT to defend itself from any suit or claim.

IT IS FURTHER AGREED, that all approved releases of information, findings, and recommendations shall include a disclaimer provision and that all published reports shall include that disclaimer on the cover and title page in the following form:

> *The opinions, findings, and conclusions in this publication are those of the author(s) and not necessarily those of the Local Public Agency, Mississippi Department of Transportation, Mississippi Transportation Commission, the State of Mississippi, or the Federal Highway Administration.*

ARTICLE XVII. CONTRACT DISPUTES

This CONTRACT shall be deemed to have been executed in ***Forrest County***, Mississippi, and all questions including, but not limited to, questions of interpretation, construction and performance shall be governed by the laws of the State of Mississippi, excluding its conflicts of laws provisions, and any litigation with respect to this CONTRACT shall be brought in a court of competent jurisdiction in ***Forrest County***, State of Mississippi. The CONSULTANT expressly agrees that under no circumstances shall the LPA be obligated to or responsible for payment of an attorney's fee for the cost of legal action to or on behalf of the CONSULTANT.

ARTICLE XVIII. COMPLIANCE WITH APPLICABLE LAW

A. The undersigned certify that to the best of their knowledge and belief, the foregoing is in compliance with all applicable laws.

B. The CONSULTANT shall observe and comply with all applicable federal, state, and local laws, rules and regulations, policies and procedures, ordinances, and orders and decrees of bodies or tribunals of the United States of America or any agency thereof, the State of Mississippi or any agency thereof, and any local governments or political subdivisions, that are in effect at the time of the execution of this CONTRACT or that may later become effective.

C. The CONSULTANT shall not discriminate against any employee nor shall any party be subject to discrimination in the performance of this CONTRACT because of race, creed, color, sex, national origin, age or disability.

D. IT IS FURTHER SPECIFICALLY AGREED that the CONSULTANT shall comply and shall require its subcontractors to comply with the regulations for COMPLIANCE WITH TITLE VI OF THE CIVIL RIGHTS ACT OF 1964, as amended, and all other applicable federal regulations as stated in "Exhibit 5" which is incorporated herein by reference.

E. It is agreed that the CONSULTANT will comply with the provisions set forth in Department of Transportation, 49 CFR, Section 18, Et Seq., regarding Uniform Administrative Requirements for Grants and Cooperative agreements in its administration of this CONTRACT or any subcontract resulting herefrom.

F. The CONSULTANT agrees that it will abide by the provisions of 49 CFR Section 26 regarding disadvantaged business enterprises and include the certification made in "Exhibit 5" to this CONTRACT in any and all subcontracts which may result from this CONTRACTS.

G. The CONSULTANT shall comply and shall require its subconsultants to comply with Code of Federal Regulations CFR 23 Part 634 - Worker Visibility – as stated in "Exhibit 5".

H. IMMIGRANT STATUS CERTIFICATION. The CONSULTANT represents that it is in compliance with the Immigration Reform and Control Act of 1986 (Public Law 99-603), as amended, in relation to all employees performing work in the State of Mississippi and does not knowingly employ persons in violation of the United States immigration laws. The CONSULTANT further represents that it is registered and participating in the Department of Homeland Security's E-Verify™ employment eligibility verification program, or successor thereto, and will maintain records of compliance with the Mississippi Employment Protection Act including, but not limited to, requiring compliance certification from all subcontractors and vendors who will participate in the performance of this Agreement and maintaining such certifications for inspection if requested. The CONSULTANT acknowledges that violation may result in the following: (a) cancellation of any public contract and ineligibility for any public contract for up to three (3) years, or (b) the loss of any license, permit, certification or other document granted by an agency, department or governmental entity for the right to do business in Mississippi for up to one (1) year, or (c) both. The CONSULTANT also acknowledges liability for any additional costs incurred by the LPA due to such contract cancellation or loss of license or permit. The CONSULTANT is required to provide the certification on Exhibit 9 in this CONTRACT to the LPA verifying that the CONSULTANT and subconsultant(s) are registered and participating in E-Verify prior to execution of this CONTRACT

I. The covenants herein shall, except as otherwise provided, accrue to the benefit of and be binding upon the successors and assigns of the parties hereto.

ARTICLE XIX. WAIVER

Failure of either party hereto to insist upon strict compliance with any of the terms, covenants, and conditions hereof shall not be deemed a waiver or relinquishment of any similar right or power hereunder at any subsequent time, or of any other provision hereof, nor shall it be construed to be a modification of the terms of this CONTRACT.

ARTICLE XX. SEVERABILITY

If any terms or provisions of this CONTRACT are prohibited by the laws of the State of Mississippi or declared invalid or void by a court of competent jurisdiction, the remainder of this CONTRACT shall not be affected thereby and each term and provision of this CONTRACT shall be valid and enforceable to the fullest extent permitted by law.

ARTICLE XXI. ENTIRE AGREEMENT

This CONTRACT constitutes the entire agreement of the parties with respect to the subject matter contained herein and supersedes and replaces any and all prior negotiations, understandings, and agreements, written or oral, between the parties relating thereto.

ARTICLE XXII. CONFLICT OF INTEREST

The CONSULTANT covenants that no public or private interests exist and none shall be acquired directly or indirectly which would conflict in any manner with the performance of the CONSULTANT'S CONTRACT. The CONSULTANT further covenants that no employee of the CONSULTANT or of any subconsultant(s), regardless of his/her position, is to personally benefit directly or indirectly from the performance of the SERVICES or from any knowledge obtained during the CONSULTANT'S execution of this CONTRACT.

ARTICLE XXIII. AVAILABILITY OF FUNDS

It is expressly understood and agreed that the obligation of the LPA to proceed under this CONTRACT is conditioned upon the availability of funds, the appropriation of funds by the Mississippi Legislature, and the receipt of state and/or federal funds. If, at any time, the funds anticipated for the fulfillment of this CONTRACT are not forthcoming or are insufficient, either through the failure of the federal government to provide funds or of the State of Mississippi to appropriate funds or the discontinuance or material alteration of the program under which funds were provided, or if funds are not otherwise available to the LPA for the performance of this CONTRACT, the LPA shall have the right, upon written notice to the CONSULTANT, to immediately terminate or stop work on this CONTRACT without damage, penalty, cost, or expense to the LPA of any kind whatsoever. The effective date of termination shall be as specified in the notice of termination.

ARTICLE XXIV. STOP WORK ORDER

A. **Order to Stop Work.** The LPA may, by written order to the CONSULTANT at any time, and without notice to any surety, require the CONSULTANT to stop all or any part of the work called for by this CONTRACT. This order shall be for a specified period not exceeding twenty-four (24) months after the order is delivered to the CONSULTANT unless the parties agree to any further period. Any such order shall be identified specifically as a stop work order issued pursuant to this clause. Upon receipt of such an order, the CONSULTANT shall forthwith comply with its terms and take all steps to minimize the occurrence of costs allocable to the work covered by the order during the period of work stoppage. Before the stop work order expires, or within any further period to which the parties shall have agreed, the LPA shall either:

(1) cancel the stop work order; or

(2) terminate the work covered by such order according to and as provided in Article III of this CONTRACT.

Prior to the LPA'S taking official action to stop work under this CONTRACT, the Executive Director of MDOT may notify the CONSULTANT, in writing, of MDOT'S intentions to ask the LPA to stop work under this CONTRACT. Upon notice from the Executive Director of MDOT, CONSULTANT shall suspend all activities under this CONTRACT, pending final action by the LPA.

B. **Cancellation or Expiration of the Order.** If a stop work order issued under this clause is canceled at any time during the period specified in the order, or if the period of the order or any extension thereof expires, the CONSULTANT shall have the right to resume work. If the LPA decides that it is justified, an appropriate adjustment may be made in the delivery schedule. If the stop work order results in an increase in the time required for or in the CONSULTANT'S cost properly allocable to the performance of any part of this CONTRACT and the CONSULTANT asserts a claim for such an adjustment within 30 days after the end of the period of work stoppage, an equitable adjustment in this CONTRACT may be made by written modification of this CONTRACT as provided by the terms of this CONTRACT.

C. **Termination of Stopped Work.** If a stop work order is not canceled and the work covered by such order is terminated, the CONSULTANT may be paid for services rendered prior to the Termination. In addition to payment for services rendered prior to the date of termination, the LPA shall be liable only for the costs, fees, and expenses for demobilization and close out of this CONTRACT, based on actual time and expenses incurred by the CONSULTANT in the packaging and shipment of all documents covered by this CONTRACT to the LPA. In no event shall the LPA be liable for lost profits or other consequential damages.

ARTICLE XXV. KEY PERSONNEL & DESIGNATED AGENTS

CONSULTANT agrees that Key Personnel identified as assigned to this PROJECT shall not be changed or reassigned without prior approval of the LPA or, if prior approval is impossible, and then notice to the LPA and subsequent review by the LPA which may approve or disapprove the action. For purposes of implementing this section and all other sections of this CONTRACT with regard to notice, the following individuals are herewith designated as agents for the respective parties unless otherwise identified in the addenda hereto:

LPA:

For Contractual Matters:

Bert Kuyrkendall, PE
212 Front Street
Hattiesburg, MS 39401
(601) 545-4540
(601) 545-4642 Fax
bkuyrkendall@hattiesburgms.com

For Technical Matters:

Bert Kuyrkendall, PE
212 Front Street
Hattiesburg, MS 39401
(601) 545-4540
(601) 545-4642 Fax
bkuyrkendall@hattiesburgms.com

CONSULTANT:

For Contractual Matters:

Michael W. Essary, PE
704 Hardy Street
Hattiesburg, MS 39401
(601) 545-1565
(601) 545-2267 Fax
michael.essary@neel-schaffer.com

Licensure Number
from the Mississippi
Board of Licensure
for Professional
Engineers and Surveyors:

P.E. #11856

For Technical Matters:

Geoffrey Crosby, PE
704 Hardy Street
Hattiesburg, MS 39401
(601) 545-1565
(601) 545-2267 Fax
geoffrey.crosby@neel-schaffer.com

Licensure Number
from the Mississippi
Board of Licensure
for Professional
Engineers and Surveyors:

P.E. #19984

ARTICLE XXVI. AUTHORIZATION

Both parties hereto represent that they have authority to enter into this CONTRACT and that the individuals executing this CONTRACT are authorized to execute it and bind their respective parties and certified copies of the applicable LPA Order and the Resolution of the Corporate Board of Directors of the CONSULTANT are attached hereto as "Exhibit 1" and incorporated herein by reference and made a part hereof as if fully copied herein in words and figures.

WITNESS this my signature in execution hereof, this the ____ day of _____ , 20___.

City of Hattiesburg

_____

Johnny L. DuPree, Ph.D., Mayor

WITNESS this my signature in execution hereof, this the ____ day of _____, 20___.

Neel-Schaffer, Inc.

BY:_____

Michael W. Essary

ATTEST:_____

Exhibits attached hereto and incorporated by reference into this contract include those identified on the attached page entitled "List of Exhibits".

LIST OF EXHIBITS

1. Evidence of Authority
2. General Scope of Work and Common Specifications
3. Fees and Expenses.
4. Sample Invoice
5. Notice to the CONSULTANT
6. CONSULTANT's Certification Regarding Debarment, Suspension and Other Responsibility Matters.
7. Certification of LPA
8. {*This Exhibit was intentionally left blank*}
9. Prime Consultant EEV Certification and Agreement

EXHIBIT 1

{{{{Attach a copy of authority to execute contracts on behalf of the LPA}}}}

{{{{Attach a copy of authority to execute contracts on behalf of the Consultant Corporation here}}}}

EXHIBIT 2

Scope of Work

The preliminary engineering work in the Woodley Elementary, Hattiesburg Safe Routes to School Project involves providing construction plans for the installation of sidewalks at Woodley Elementary School.

The Woodley Elementary School Sidewalk Installations will occur along 21st Avenue from Quinn Street to Hardy Street, along O'Ferral Street from 23rd Avenue to 21st Avenue, along O'Ferral Street from 20th Avenue to Patton Avenue, and along Pearl Street from 22nd Avenue to 21st Avenue

Woodley Elementary Sidewalk Installation - Proposed Project Schedule

Task	Description	Est Start	Est Complete
1	Create development standards relating to drainage, sidewalks, signage, and striping	11/01/2012	11/15/2012
2	Carryout sidewalk design and plan production. Complete plans and specification package	11/15/2012	7/31/2013

EXHIBIT 3

FEES AND EXPENSES

The LPA shall pay the CONSULTANT on an actual cost-plus fixed-fee with an upset limit for the satisfactory completion of the Scope of Work set forth under "Exhibit 2", hereto, for all salaries, payroll additives, overhead, direct costs and CONSULTANT's fixed fees attributable to this CONTRACT.

Actual costs as the term is used herein shall include all direct salaries, payroll additives, overhead and direct cost. Direct salaries are those amounts actually paid to the person performing the SERVICES which are deemed reasonably necessary by the LPA for the advancement of the Scope of Work. Overtime work is not contemplated by this contract. Accordingly, direct salaries chargeable to this contract shall not include any overtime premium. Salaries for officers, principals or partners shall not increase at a rate in excess of that for other employees. Payroll additives and overhead consist of employee fringe benefits and that part of CONSULTANT's allowable indirect costs attributable to this contract. Direct Costs are those charges deemed reasonably necessary by the LPA for the successful completion of the Scope of Work which are charged directly to the project and not included in overhead.

Fixed fee as the term is used herein shall mean a dollar amount established to cover the CONSULTANT's profit and business expenses not allocable to overhead for the successful completion of the SERVICES.

SCHEDULE OF MAXIMUM RATES, EXPENSES & FEES:

The following schedule of rates for services will not be exceeded for all work under this CONTRACT:

Direct Salaries:

Direct salaries shall not exceed those amounts actually paid to an employee performing services reasonably necessary for the completion of the Scope of Work set forth under "Exhibit 2" to this contract.

All charges for services must be substantiated by supporting data, i.e. certified time sheets, daily logs, check stubs, pay vouchers, etc.

Payroll Additive & Overhead:

The rate, based on the CONSULTANT'S latest governmental audited rate, not to exceed two (2) years, and as approved by MDOT, for payroll additives and overhead shall be computed at **152.26%(FCCM: 0.26 %)** of direct salary cost. This rate shall be used to calculate costs under this CONTRACT and in the preparation of costs estimates for Supplemental Agreements under this CONTRACT. The estimated FCCM for cost proposals in Supplemental Agreements must be specially identified and distinguished from the other costs. Profit/Fee shall not include amounts applicable to FCCM. Final payment of these costs shall be adjusted after completion of the final audit to reflect the actual rates experienced by the CONSULTANT during the course of this CONTRACT; however, in no event shall such an adjustment allow the CONTRACT'S cost to exceed the maximum limitation stated. Said audit of the CONSULTANT will be conducted by the LPA, or the LPA's designated auditor at the conclusion of the contract in accordance with Federal and LPA requirements.

All overhead rates submitted to MDOT for approval shall comply with the AASHTO Audit Guide, 2010, as amended. In addition, the CONSULTANT shall submit written certification in accordance with FHWA Order 4470.1A, as amended,

that the indirect cost rate submitted does not include any costs which are expressly unallowable and the indirect cost rate was established only with allowable costs in accordance with the applicable cost principles contained in the Federal Acquisition Regulations (FAR) of 48 CFR part 31.

Direct Costs:

The LPA will reimburse the CONSULTANT's actual documented expenses; or the amount allowable under the current edition of the MDOT State Travel Handbook, whichever is lower. Except as otherwise specifically provided herein, the procedures generally outlined in the MDOT State Travel Handbook shall govern the allowability of any expense reimbursement. (i.e. no meal reimbursement when there is no overnight stay).

All direct costs (except meals) must be substantiated by supporting data, i.e. mileage, log books, receipts, etc.

All other expenses will be reimbursed upon receipt of acceptable paid invoices.

Fixed Fee:

The CONSULTANT's fixed fee shall be **$251.55**, which sum shall be paid incrementally each month in an amount determined by multiplying the total fixed fee by the project completion percentage, less any amounts previously paid for fixed fees.

Contract Maximums:

Under no circumstances shall the amount payable by the LPA for this assignment exceed **$ 2,498.71** (Total of all Charges) without the prior written consent of both parties.

Fee and Expense Summary

Labor Cost & Overhead	Direct Cost	Fixed Fee	FCCM	Sub-Consultant	Total
$831.00	**$148.72**	**$251.55**	**$2.16**	**$0**	**$2,498.71**

****See Delineation of Cost Breakdown behind Exhibit 9.**

EXHIBIT 4
SAMPLE INVOICE

LOCAL PUBLIC AGENCY
ADDRESS
CITY, STATE, ZIP CODE DATE:

ATTENTION: ACCOUNTS PAYABLE

INVOICE NO. 0000
PERIOD _____, 20__ THROUGH ____, 20__
PROFESSIONAL SERVICES IN ACCORDANCE WITH
CONTRACT DATED_____, 20__, AS RELATES TO
PROJECT NO. ___-___-____-____-____ IN_____ COUNTY, HIGHWAY_____.

CONSULTANT:
CUSTOMER NUMBER 0000000000 FILE NO. 000-000000
REPORT NUMBER: 0000 through 00000

	CURRENT PERIOD	PREVIOUS ESTIMATE	TOTAL ALLOWED TO DATE
DIRECT SALARIES	$	$	$
* PAYROLL ADDITIVE (less FCCM)	$	$	$
FIXED FEE (% complete X total fee less amounts previously paid – not to exceed 75%)	$	$	$
PAYROLL ADDITIVE w/ FCCM only	$	$	$
** DIRECT COSTS	$	$	$
PROJECT TOTAL	$	$	$
AMOUNT DUE THIS INVOICE:	**$**	**$**	**$**

NOTE:
1. * PAYROLL ADDITIVES (INCLUDING ALL FRINGE BENEFITS & OVERHEAD-)
2. ** DIRECT COSTS (ATTACH SUPPORTING DATA)
3. THE CONSULTANT MAY USE ITS OWN INVOICE FORM SO LONG AS IT HAS BEEN APPROVED. PRIOR TO SUBMISSION BY THE CONSULTANT SAID FORM SHOULD, AT A MINIMUM, CONTAIN THE ABOVE INFORMATION

SUPPORTING DATA

Project No. 00-0000-00-000-00
County _____

Employee and Classification	Rate of Pay	Current Period Hours	Current Period Costs	Previous Period Costs	Costs To Date
DIRECT LABOR AND DIRECT COSTS					
John P. Public, Jr Engineer	0.00	0.0	0.00	0.00	0.00
John P. Public, Jr Designer	0.00	0.0	0.00	0.00	0.00
John P. Public, Jr Engineer	0.00	0.0	0.00	0.00	0.00
John P. Public, Jr Technician	0.00	0.0	0.00	0.00	0.00
Sub Total		0.0	0.00	0.00	0.00
Payroll Additives (minus FCCM)			0.00	0.00	0.00
Total Labor			0.00	0.00	0.00
Fixed Fee			0.00	0.00	0.00
Payroll additives w/ only FCCM (Direct Labor * FCCM)			0.00	0.00	0.00
Direct Costs			0.00	0.00	0.00
Project Total			0.00	0.00	0.00

EXHIBIT 5

NOTICE TO CONTRACTORS, FEDERAL-AID CONTRACT COMPLIANCE WITH TITLE VI OF THE CIVIL RIGHTS ACT OF 1964 COPELAND ANTI-KICKBACK ACT, DAVIS BACON ACT CONTRACT WORK HOURS AND SAFETY STANDARDS ACT CLEAN AIR ACT, ENERGY POLICY AND CONSERVATION ACT DISADVANTAGED BUSINESS ENTERPRISES, WORKER VISIBILITY

During the performance of this CONTRACT, the CONSULTANT, for itself, its assignees and successor-in-interest (hereinafter referred to as the "CONSULTANT") agrees as follows:

1. Compliance with Regulations: The CONSULTANT will comply with the Regulations of the Department of Transportation relative to nondiscrimination in Federally-assisted programs of the Department of Transportation (Title 49, Code of Federal Regulations, Part 21, hereinafter referred to as the "Regulations"), which are herein incorporated by reference and made a part of this CONTRACT.

2. Nondiscrimination: The CONSULTANT, with regard to the work performed by it after award and prior to completion of the contract work, will not discriminate on the grounds of race, religion, color, sex, national origin, age or disability in the selection and retention of subcontractors including procurement of materials and leases of equipment. The CONSULTANT will not participate either directly or indirectly in the discrimination prohibited by Section 21.5 of the Regulations, including employment practices when the CONTRACT covers a program set forth in Appendix B of the Regulations. In addition, the CONSULTANT will not participate either directly or indirectly in discrimination prohibited by 23 C.F.R. 710.405(b).

3. Solicitations for Subcontracts. Including Procurement of Materials and Equipment: In all Solicitations, either by competitive bidding or negotiation made by the CONSULTANT for work to be performed under a subcontract, including procurement of materials or equipment, each potential subcontractor or supplier shall be notified by the CONSULTANT of the CONSULTANT's obligations under this CONTRACT and the Regulations relative to nondiscrimination on the grounds of race, religion, color, sex, national origin, age or disability.

4. Anti-kickback provisions: All contracts and subcontracts for construction or repair shall include a provision for compliance with the Copeland "Anti-Kick Back" Act (18 U.S.C. 874) as supplemented in Department of Labor regulations (29 CFR, Part 3). This Act provides that each contractor or subcontractor shall be prohibited from inducing, by any means, any person employed in the construction, completion, or repair of public work, to give up any part of the compensation to which he is otherwise entitled. The CONSULTANT shall report all suspected or reported violations to the LPA.

5. Davis Bacon Act: When required by the federal grant program legislation, all construction contracts awarded to contractors and subcontractors in excess of $2,000 shall include a provision for compliance with the Davis-Bacon Act (40 U.S.C. 276a to a-7) and as supplemented by Department of Labor regulations (29 CFR, Part 5). Under this Act, contractors shall be required to pay wages to laborers and mechanics at a rate not less than the minimum wages specified in a wage determination made by the Secretary of Labor. In addition, contractors shall be required to pay wages specified in a wage determination made by the Secretary of Labor. In addition, contractors shall be required to pay wages specified in a wage determination made by the Secretary of Labor. In addition, contractors shall be required to pay wages not less often than once a week.

6. Contract Work Hours and Safety Standards Act: Where applicable, all contracts awarded by or to contractors and subcontractors in excess of $100,000 which involve the employment of mechanics or laborers shall include a provision for compliance with sections 103 and 107 of the Contract Work Hours and Safety Standards Act (40 U.S.C. 327-330) as supplemented by Department of Labor Regulations (29 CFR, Part 5). Under section 103 of the Act, each contractor shall be required to compute the wages of every mechanic and

laborer on the basis of a standard work week of 40 hours. Work in excess of the standard work week is permissible provided that the worker is compensated at a rate of not less than 1 1/2 times the basic rate of pay for all hours worked in excess of 40 hours in the work week. Section 107 of the Act is applicable to construction work and provides that no laborer or mechanic shall be required to work in surroundings or under working conditions which are unsanitary, hazardous, or dangerous to his health and safety as determined under construction, safety, and health standards promulgated by the Secretary of Labor. These requirements do not apply to the purchases of supplies or materials or articles ordinarily available on the open market, or contracts for transportation or transmission of intelligence.

7. Clean Air Act: Compliance with all applicable standards, orders, or requirements issued under section 306 of the Clear Air Act (42 U.S.C. 1857 (h), Section 508 of the Clean Water Act (33 U.S.C. 1368), Executive Order 11738, and Environmental Protection Agency regulations (40 CFR Part 15) (Contracts and subcontracts in amounts in excess of $100,000).

8. Energy Policy and Conservation Act: Mandatory standards and policies relating to energy efficiency which are contained in the state energy conservation plan issued in compliance with the Energy Policy and Conservation Act (Pub. L. 94-163).

9. Disadvantaged Business Enterprises: It is the policy of the Mississippi Department of Transportation to comply with the requirements of 49 C.F.R. 26, to prohibit unlawful discrimination, to meet it's goal for DBE participation, to meet that goal whenever possible by race-neutral means, to create a level playing field, and to achieve that amount of DBE participation that would be obtained in an non-discriminatory market place. To meet that objective in any United States Department of Transportation assisted contracts, the LPA and the CONSULTANT shall comply with the "Mississippi Department of Transportation's Disadvantaged Business Enterprise Programs For United States Department Of Transportation Assisted Contracts".

Neither the CONSULTANT (Contractor), nor any sub-recipient or sub-contractor shall discriminate on the bases of race, color, national origin, or sex in the performance of this contract. The CONSULTANT (Contractor) shall carry out applicable requirements of 49 C.F.R. 26 in the award and administration of United States Department of Transportation assisted contracts. Failure of the CONSULTANT (Contractor) to carry out those requirements is a material breach of the contract which may result in the termination of this contract or such other remedies as the Mississippi Department of Transportation deems appropriate.

10. Worker Visibility: All workers within the right-of-way of a Federal-aid highway who are exposed either to traffic (vehicles using the highway for the purposes of travel) or to construction equipment within the work area shall wear high-visibility safety apparel – personal protective safety clothing that is intended to provide conspicuity during both daytime and nighttime usage, and that meets the Performance Class 2 or 3 requirements of the ANSI/ISEA 107–2004 publication entitled "American National Standard for High-Visibility Safety Apparel and Headwear" – for compliance with 23 CFR, Part 634.

EXHIBIT 6

CERTIFICATION REGARDING DEBARMENT, SUSPENSION AND OTHER RESPONSIBILITY MATTERS

CERTIFICATION REGARDING DEBARMENT, SUSPENSION, AND OTHER RESPONSIBILITY MATTERS - Certification in accordance with Section 29.510 Appendix A, C.F.R./Vol. 53, No. 102, page 19210 and 19211:

(1) The CONSULTANT certifies to the best of its knowledge and belief that it and its principals:

(a) are not presently debarred, suspended, proposed for debarment, declared ineligible, or voluntarily excluded from covered transactions by any federal department or agency;

(b) have not within a three-year period preceding this proposal been convicted of or had a civil judgment rendered against them for commission of fraud or a criminal offense in connection with obtaining, attempting to obtain, or performing a public (federal, state or local) transaction or contract under a public transaction, violation of federal or state antitrust statutes or commission of embezzlement, theft, forgery, bribery, falsification or destruction of records, making false statements, or receiving stolen property;

(c) are not presently indicted for or otherwise criminally or civilly charged by a governmental entity (federal, state or local) with commission of any of the offenses enumerated in paragraph (l)(b) of this certification: and

(d) have not within a three-year period preceding this application/proposal had one or more public transactions (federal, state or local) terminated for cause or default;

(e) has not either directly or indirectly entered into any agreement participated in any collusion; or otherwise taken any action in restraint of free competitive negotiation in connection with this CONTRACT.

(2) The CONSULTANT further certifies, to the best of his/her knowledge and belief, that:

(f) No federal appropriated funds have been paid or will be paid to any person for influencing or attempting to influence an officer or employee of any Federal agency, a member of Congress, an officer or employee of Congress, or employee of a member of Congress in connection with the awarding of any Federal loan, the entering into of any cooperative agreement, and the extension, continuation, renewal, amendment, or modification of any Federal contract, grant, loan, or cooperative agreement.

(g) If any funds other than Federal appropriated funds have been paid or will be paid to any person for influencing or attempting to influence an officer of employee of Congress, or any employee of a member of Congress in connection with this CONTRACT, Standard Form-LLL, "Disclosure Form to Report Lobbying", in accordance with its instructions will be completed and submitted.

The certification contained in (1) and (2) above is a material representation of fact upon which reliance is placed and a pre-requisite imposed by Section 1352, Title 31, U. S. Code prior to entering into this CONTRACT. Failure to comply shall be subject to a civil penalty of not less than $10,000 and not more than $100,000. The CONSULTANT shall include the language of the certification in all subcontracts exceeding $100,000 and all sub-contractors shall certify and disclose accordingly.

I hereby certify that I am the duly authorized representative of the CONSULTANT for purposes of making this certification, and that neither I, nor any principal, officer, shareholder or employee of the above firm has:

(a) employed or retained for commission, percentages, brokerage, contingent fee, or other consideration, any firm or person (other than a bona fide employee working solely for me or the above consultant) to solicit or secure this agreement,

(b) agreed, as an express or implied condition for obtaining this CONTRACT, to employ or retain the services of any firm or person in connection with carrying out the agreement, or

(c) paid, or agreed to pay, to any firm, organization or person (other than a bone fide employee working solely for me or the above consultant) any fee, contribution, donation, or consideration of any kind for, or in connection with, procuring or carrying out the agreement; except as herein expressly stated (if any).

I acknowledge that this Agreement may be furnished to the Federal Highway Administration, United States Department of Transportation, in connection with the Agreement involving participation of Federal-Aid Highway funds, and is subject to applicable state and federal laws, both criminal and civil.

SO CERTIFIED this _____ day of _____, 20____.

CONSULTANT

BY: _____

Michael W. Essary

ATTEST: _____

My Commission Expires: _____

Notary

EXHIBIT 7

CERTIFICATION OF THE LPA

I hereby certify that I am the Chief Administrative Official, duly authorized by the LPA to execute this certification and that the above consulting firm or its representative has not been required, directly or indirectly, as an express or implied condition in connection with obtaining or carrying out this agreement to:

(a) employ or retain, or agree to employ or retain, firm or person, or

(b) pay, or agree to pay, to any firm, person organization, any fee, contribution, donation, or consideration of any kind except as here expressly stated (if any).

SO CERTIFIED on the _____day of _____, 20 __.

LPA __City of Hattiesburg_____

_____

Johnny L. DuPree, Ph.D., Mayor

EXHIBIT 8

{Intentionally Left Blank}

EXHIBIT 9

PRIME CONSULTANT / CONTRACTOR EEV CERTIFICATION AND AGREEMENT

By executing this Certification and Agreement, the undersigned verifies its compliance with the, "Mississippi Employment Protection Act," Section 71-11-3 of the Mississippi Code of 1972, as amended, and any rules or regulations promulgated by the LPA, Mississippi Transportation Commission [MTC], Department of Employment Security, State Tax Commission, Secretary of State, Department of Human Services in accordance with the Mississippi Administrative Procedures Law (Section 25-43-1 et seq., Mississippi Code of 1972, as amended), stating affirmatively that the individual, firm, or corporation which is contracting with the LPA has registered with and is participating in a federal work authorization program* operated by the United States Department of Homeland Security to electronically verify information of newly hired employees pursuant to the Immigration Reform and Control Act of 1986, Pub.L. 99-603,100 Stat 3359, as amended. The undersigned agrees to inform the LPA if the undersigned is no longer registered or participating in the program.

The undersigned agrees that, should it employ or contract with any entity(s) in connection with the performance of this CONTRACT, the undersigned will secure from such entity(s) verification of compliance with the Mississippi Employment Protection Act. The undersigned further agrees to maintain records of such compliance and provide a copy of each such verification to the LPA, if requested, for the benefit of the LPA or this CONTRACT.

128686
EEV* Company Identification Number [Required]

The undersigned certifies that the above information is complete, true and correct to the best of my knowledge and belief. The undersigned acknowledges that any violation may be subject to the cancellation of the contract, ineligibility for any state or public contract for up to three (3) years, the loss of any license, permit, certificate or other document granted by any agency, department or government entity for the right to do business in Mississippi for up to one (1) year, or both, any and all additional costs incurred because of the contract cancellation or the loss of any license or permit, and may be subject to additional felony prosecution for knowingly or recklessly accepting employment for compensation from an unauthorized alien as defined by 8 U.S.C §1324a(h)(3), said action punishable by imprisonment for not less than one (1) year nor more than five (5) years, a fine of not less than One Thousand Dollars ($1,000.00) nor more than Ten Thousand Dollars ($10,000.00), or both, in addition to such prosecution and penalties as provided by Federal law.

BY:_____ _____
Authorized Officer or Agent Date

Michael W. Essary _____
Printed Name of Authorized Officer or Agent Title of Authorized Officer or Agent of Contractor / Consultant

SWORN TO AND SUBSCRIBED before me on this the _____ day of _____, 20____.

_____
NOTARY PUBLIC
My Commission Expires: _____

* As of the effective date of the Mississippi Employment Protection Act, the applicable federal work authorization program is E-Verify™ operated by the U. S. Citizenship and Immigration Services of the U.S. Department of Homeland Security, in conjunction with the Social Security Administration.

City of Hattiesburg / Neel-Schaffer, Inc.
SRSP 0210-00(024) LPA / 106139-411000
O'Ferral from 23rd to Patton, 21st from Quinn to Hardy, Pearl from 22nd to 21st

Classification	Hours	Rate of Pay	Extension
Principle	1	$56.00	$56.00
Project Manager	20	$30.00	$600.00
Engineer			$0.00
CADD	2	$27.50	$55.00
Clerical	6	$20.00	$120.00
Labor Classification			$0.00
Labor Classification			$0.00
Labor Classification			$0.00
Labor Classification			$0.00
Labor Classification			$0.00
Labor Classification			$0.00
Labor Classification			$0.00
Raw Labor			**$831.00**

Overhead Rate	152.26	%	$1,265.28
(Enter appropriate overhead rate (home or field) - FCCM in cell C20)			
Total Labor + O/H			$2,096.28
Fixed Fee	12	%	$251.55
(Enter FF % in cell C25)			
FCCM Overhead	0.26	%	$2.16
(Enter FCCM in C28)			

Direct Costs:	Qty.	Unit Price[1]	
Mileage	57	$0.36	$20.52
Meals			$0.00
Lodging			$0.00
Postage	47	$0.44	$20.68
Supplies	1	$35.70	$35.70
Reproductions	798	$0.09	$71.82
Other			$0.00
Total Direct Cost			$148.72

Subconsultant Cost [2]:			
Subconsultant A			$0.00
Subconsultant B			$0.00
Total Subconsultant Cost			$0.00

[1] See State Travel Handbook

[2] All subs must provide back-up and contain MDOT approved overhead rates

Project Total	**$2,498.71**

Geoffrey Crosby, P.E.

Education

Bachelor of Science, 2005,
Civil Engineering,
Mississippi State University

Registrations

Professional Engineer:
Mississippi, 19984

Associations

National Society of
Professional Engineers

Mississippi
Engineering Society

Professional History

Mr. Crosby joined Neel-Schaffer, Inc. July 2007 with two years experience in civil engineering projects. Prior to joining the firm, Mr. Crosby's work experience included design of residential and commercial developments, and preparing SWPPP's and hydraulic studies for the railroad. Mr. Crosby was responsible for the design of projects that involved roads, storm water management, wastewater collection, and other utilities.

Since joining the firm, Mr. Crosby has been responsible for the management of projects from the conceptual stages through design and construction. He has worked on projects that were involved with funding agencies such as CDBG, MDOT, FEMA, and NRCS.

During his time at Neel-Schaffer Mr. Crosby has been responsible for the management of both private and publicly funded projects in which he was responsible for developing drawings, cost estimation, and development of contract, bid documents, and technical specifications.

Mr. Crosby has been involved with the design of street and drainage projects, storm water management systems, potable water supply and distribution systems, and wastewater collection. His responsibilities as a project engineer have included project management from conceptual design through final design and project management during construction.

Related Experience

- **Chain Park, City of Hattiesburg Phase I & II –** Created a new park for City of Hattiesburg with grant funding through the MDOT Transportation Enhancement Grant and included the design and construction engineering of roadway, parking areas, pedestrian trail and sidewalks, boardwalk, playground equipment, and drainage improvements. Chain Park includes walking paths, fitness stations, shade pavilions, children's play equipment, parking, vehicular circulation and boardwalk on an ecologically sensitive site due to the existence of wetlands and frontage along the Leaf River.
- **Wiggins Bicycle Trail, City of Wiggins –** Project included the design and construction engineering of the new 3,800 ft. corridor starts at the Flint Creek Water Park, continues through the city of Wiggins, and connects to other existing and proposed recreational destinations. Flint Creek Water Park is a 600 acre lake owned by the Pat Harrison Waterway District, attracting half a million visitors annually. The park features campsites and cabins, as well as a variety of water sports that include boating, skiing and fishing. The project was funded with grant funding through the MDOT Transportation Enhancement Grant.
- **Woodley Sidewalk Project, City of Hattiesburg** – Project included the design and construction engineering of sidewalks and driveways for approximately 3,900 ft. along 21st Ave. from Camp St. to Mamie St. and along Mamie St. from 21st Ave. to 15th Ave. providing safe and accessible route for pedestrians as a part of Safe Routes to School. The project was funded by CDBG with ARRA.
- **Highway 49 & I-59 Interchange and Highway 49S & Highway 11 Interchange Landscaping Improvements, City of Hattiesburg –** Project consisted of creating landscaping beds including Live Oak, Crape Myrtle and Magnolia trees as well as Lantana, Azalea and Juniper shrubs at the Highway interchange locations. Neel-Schaffer's responsibilities included construction engineering and inspection of landscaping improvements. The project was funded by MDOT.

ESC
Rev. 08/28/94 (Base)
Rev. 02-20-2011 (This form)

PRELIMINARY ENGINEERING SERVICES CONTRACT

Woodley Elementary, Hattiesburg Safe Routes to School
Project No. SRSP-0210-00(024)LPA/106139-411000
Forrest County

THIS CONTRACT, is made and entered into by and between the **City of Hattiesburg**, a body Corporate of the State of Mississippi (the "LPA"), and, **Neel-Schaffer, Inc.** (the "CONSULTANT"), a **Mississippi** Corporation, duly registered to do business in the State of Mississippi, whose address for mailing is **704 Hardy Street, Hattiesburg, MS 39401,** effective as of the date of latest execution below.

WITNESSETH:

WHEREAS, the LPA proposes to perform services in preparing construction plans for sidewalks at Woodley Elementary, as provided for in Project No. **SRSP-0210-00(024)LPA/106139-411000** which includes sidewalk along 21st Avenue from Quinn Street to Hardy Street, sidewalk along O'Ferral Street from 23rd Avenue to 21st Avenue and from 20th Avenue to Patton Avenue, and sidewalk along Pearl Street from 22nd Avenue to 21st Avenue, hereinafter called the "PROJECT"; and,

WHEREAS, the LPA desires to engage a qualified and experienced CONSULTANT to perform engineering services in connection with the PROJECT, all of which are hereinafter called the "SERVICES"; and,

WHEREAS, the CONSULTANT has represented to the LPA that it is experienced and qualified to provide those services, and the LPA has relied upon such representation; and,

WHEREAS, the CONSULTANT herein was chosen for their expertise in performing the services in connection with the PROJECT and found satisfactory by the LPA; which is now desirous of entering into a contract;

WHEREAS, the CONSULTANT herein was chosen through the Consultant Selection Process pursuant to Mississippi Department of Transportation (hereinafter "MDOT") Standard Operating Procedure ADM-24-01-00-000; (March 1, 2001, as amended) and Federal Aid Policy Guide Part 172 and found satisfactory; to the end that both parties are now desirous of entering into a contract; and

NOW, THEREFORE, for and in consideration of the mutual promises and covenants contained herein and for other good and valuable considerations flowing unto the parties, the receipt and sufficiency of which is hereby acknowledged, the LPA and the CONSULTANT do hereby contract and agree as follows:

ARTICLE I. GENERAL RECITALS

CONSULTANT shall, for the agreed fees, furnish all engineering services and materials required to perform the tasks described in the Scope of Work for the proposed transportation project. In so doing, CONSULTANT shall meet the current industry standards as to general format and content and in addition thereto, any special requirements of the LPA.

THE LPA, in support of CONSULTANT will provide the CONSULTANT a Scope of Work shown in "Exhibit 2" hereto and any other data which may be of assistance to CONSULTANT and within the possession and control of the LPA.

Manuals, guides, and specifications applicable to this CONTRACT shall be those approved and/or adopted by MDOT and in effect on the effective date of this CONTRACT, unless otherwise specified in this Contract or subsequently directed by MDOT during the course of the CONTRACT.

ARTICLE II. SCOPE OF WORK

The CONSULTANT shall conduct the SERVICES in accordance with the Scope of Work attached to this CONTRACT as "Exhibit 2" and made a part hereof as if fully set forth herein. The performance of the SERVICES referred to in "Exhibit 2" shall be the primary basis for measurement of performance under this CONTRACT. The LPA specifically reserves the right and privilege to enlarge or reduce the scope; or to cancel this CONTRACT at any time.

ARTICLE III. CONTRACT TERM

This CONTRACT shall commence upon the latest date of execution below and continue until such time as the above named project is successfully completed to the satisfaction of the LPA or until **the 31st of July 2013, 5:00 PM** CDT, at which time this CONTRACT shall absolutely and finally terminate.

During the term of this CONTRACT, the LPA reserves the right to terminate this CONTRACT in whole or in part, at any time, with or without cause, upon seven (7) days written notice to the CONSULTANT, notwithstanding any just claims by the CONSULTANT for payment of SERVICES rendered prior to the date of termination. The LPA shall be liable only for the costs, fees and expenses for demobilization and close out of contract, based on actual time and expenses incurred by CONSULTANT in the packaging and shipment of all documents covered by this CONTRACT to the LPA. In no event shall the LPA be liable for lost profits or other consequential damages.

ARTICLE IV. TIME OF PERFORMANCE

TIME IS OF THE ESSENCE IN THIS CONTRACT. The CONSULTANT shall be prepared to perform its responsibilities for providing SERVICES commencing on the date of execution of the CONTRACT.

The CONSULTANT has submitted a proposed project schedule to the LPA which has been incorporated herein as a part of "Exhibit 2", which when approved by final execution of this CONTRACT shall control the evaluation of the CONSULTANT's progress on this PROJECT. A copy of the progress schedule, indicating the actual time expended on specific portions of this project, shall be submitted along with an estimated percentage completed with each monthly statement.

A Notice to Proceed shall be issued under authority from the LPA within 30 days after final execution of this CONTRACT. The CONSULTANT may not begin work on any feature of this PROJECT prior to receiving a Notice to Proceed from the LPA.

ARTICLE V. RELATIONSHIP OF THE PARTIES

The relationship of the CONSULTANT to the LPA is that of an independent contractor, and said CONSULTANT, in accordance with its status as an independent contractor, covenants and agrees that it will conduct itself consistent with such status, that it will neither hold itself out as, nor claim to be, an officer or employee of the LPA by reason hereof. The CONSULTANT will not by reason hereof, make any claim, demand or application or for any right or privilege applicable to an officer or employee of the LPA, including but not limited to workers' compensation coverage, unemployment insurance benefits, social security coverage, retirement membership or credit, or any form of tax withholding whatsoever.

All notices, communications, and correspondence between the LPA and the CONSULTANT shall be directed to the key personnel and agents designated in this contract.

ARTICLE VI. COMPENSATION, BILLING & AUDIT

A. Cost and Fees

The CONSULTANT shall be paid on the basis set forth in "Exhibit 3" to this CONTRACT. Under no circumstances shall the LPA be liable for any amounts, including any costs, which exceed the maximum dollar amount of compensation that is specified in and set forth in "Exhibit 3".

B. Monthly Billing

The CONSULTANT may submit monthly billing to the LPA. (A sample of a preferred invoice is attached as "Exhibit 4".) Each billing shall include all time and allowable expenses through the end of the billing period. Direct expenses, as used herein, include the costs of travel, subsistence, shipping charges, long distance telephone calls and printing if it is not company accounting policy to include these costs in overhead rates. The LPA retains the right to verify time and expense records by audit of any or all CONSULTANT's time and accounting records at any time during the life of the CONTRACT and up to three years thereafter.

If SERVICES are rendered within a given State fiscal year, an invoice requesting payment from the CONSULTANT shall be presented to the LPA within 60 days of the end of the State fiscal year. **Should the CONSULTANT fail to present the invoice within the allotted time, legislative approval may be required before payment can be rendered.**

The CONSULTANT further agrees that FHWA or any other Federal Agency may audit the same records at any time during the life of the CONTRACT and up to three years thereafter, should the funding source for all or any part of the CONTRACT be funds of the United States of America.

C. Record Retention

The CONSULTANT shall maintain all time and expense records incurred on the PROJECT and used in support of its proposal and shall make such material available at all reasonable times during the period of the CONTRACT and for three years from the date of final payment under this CONTRACT for inspection by the LPA, and copies thereof shall be furnished upon request, at the LPA's expense. The CONSULTANT agrees that the provisions of this Article shall be included in any CONTRACT it may make with any subcontractors, assignees or transferees.

D. Retainage

The LPA shall retain the final 25% of the CONSULTANT's Fixed Fee until the final payment request has been received and an audit of the total PROJECT cost to date has been completed by the LPA or its designee.

ARTICLE VII. FINAL PAYMENT

The CONSULTANT shall clearly indicate on its last Invoice for the CONTRACT that the Invoice is "FINAL". The LPA will confirm that the CONTRACT is ready to be closed and the "FINAL" Invoice may be paid. All "FINAL" invoices shall pay any retainage withheld on the CONTRACT. However, under no circumstances will the total amount paid exceed the maximum not to exceed amount established for the CONTRACT. The CONSULTANT agrees that acceptance of the final payment shall be in full and final settlement of all claims arising against the LPA for work done, documents furnished, cost incurred, or otherwise arising out of this CONTRACT and shall release the LPA from any and all further claims of whatever nature, whether known or unknown, for and on account of said CONTRACT, including payment for any and all work done, and labor and material furnished in connection with the same. Errors and/or omissions discovered subsequent to the acceptance by the LPA of the final contract documents shall be corrected by the CONSULTANT without additional compensation. The CONSULTANT shall submit their "FINAL" invoice no later than 45 days following termination of the CONTRACT.

ARTICLE VIII. REVIEW OF WORK

Authorized representatives of the LPA may at all reasonable times review and inspect the SERVICES under this CONTRACT and any addenda or amendments thereto. Authorized representatives of the FHWA may also review and inspect the SERVICES under this CONTRACT should funds of the United States of America be in any way utilized in payment for said SERVICES. Such inspection shall not make the United States of America a party to this CONTRACT, nor will FHWA interfere with the rights of either party hereunder.

All reports, drawings, studies and maps prepared by and for the CONSULTANT, shall be made available to authorized representatives of the LPA for inspection and review at all reasonable times in the General Offices of the LPA. Authorized representatives of the FHWA may also review and inspect said reports, drawings, studies and maps prepared under the CONTRACT should funds of the United States of America be in any way utilized in payment for the same. Acceptance by the LPA shall not relieve the CONSULTANT of its professional obligation to correct, at its expense, any of its breaches, errors and/or omissions, in the final version of the work.

The CONSULTANT shall be responsible for performance of and compliance with all terms of this CONTRACT, including the Scope of Work and other exhibits, and including any technical specifications and special requirements of the LPA, and shall be responsible for errors and/or omissions, including those as to conduct and care, format and content, for all aspects of the CONTRACT, and including professional quality and technical accuracy of all designs, drawings, specifications, and other services furnished by the CONSULTANT.

Failure to comply with any terms of this CONTRACT shall be corrected by the CONSULTANT without additional compensation.

If any breach of CONTRACT, is discovered by LPA personnel after final acceptance of the work by the LPA, then the CONSULTANT shall, without additional compensation, cure any deficiency or breach including errors and/or omissions in designs, plans, drawings, specifications, or other services.

In the event that the project schedule requires that a breach of this CONTRACT be corrected by someone other than the CONSULTANT then the actual costs incurred by the LPA for such corrections shall be the responsibility of the CONSULTANT. The LPA shall give the CONSULTANT an opportunity to correct said breach unless (1) the LPA determines, in its sole discretion, that the CONSULTANT cannot cure the breach within the schedule established by the LPA, or (2) the LPA determines, in its sole discretion, that the CONSULTANT cannot cure the breach to the satisfaction of the LPA.

In the event that the CONSULTANT breaches this CONTRACT, and the breaches of the CONSULTANT are discovered during the construction phase, then an accounting of all costs incurred by the LPA resulting from such breach, including errors and/or omissions, will be made and such amount will be recovered from the CONSULTANT.

ARTICLE IX. RESPONSIBILITIES FOR CLAIMS AND LIABILITY

The CONSULTANT shall indemnify, defend and hold harmless the LPA and all its officers, agents and employees from any claim, loss, damage, cost, charge or expense arising out of any negligent act, actions, neglect or omission by the CONSULTANT, its agents, employees, or subcontractors during the performance of this CONTRACT, whether direct or indirect, and whether to any person or property for which LPA or said parties may be subject, except that neither the CONSULTANT nor any of his agents or subcontractors will be liable under this provision for damages arising out of the injury or damage to persons or property solely caused or resulting from the negligence of the LPA or any of its officers, agents or employees.

The CONSULTANT'S obligations under this Article, including the obligations to indemnify, defend, hold harmless, pay reasonable attorney fees or, at the LPA'S option, participate and associate with the LPA in the defense and trial or arbitration of any damage claim, lien or suit and any related settlement negotiations, shall be initiated by the LPA'S notice of claim for indemnification to the CONSULTANT. Only an adjudication or judgment after the highest appeal is exhausted specifically finding the LPA entirely responsible shall excuse performance of this provision by the CONSULTANT. In such case, the LPA shall pay all costs and fees related to this obligation and its enforcement. Should there be a finding of dual or multiple liability, costs and fees shall be apportioned accordingly.

In conjunction herewith, the LPA agrees to notify CONSULTANT in writing as soon as practicable after receipt or notice of any claim involving CONSULTANT. These indemnities shall not be limited by reason of the listing of any insurance coverage below.

ARTICLE X. INSURANCE

Prior to beginning the work, the CONSULTANT shall obtain and furnish certificates to the LPA for the following minimum amounts of insurance:

A. Workers' Compensation Insurance in accordance with the laws of the State of Mississippi.

B. Public Liability Insurance in an amount not less than one million dollars ($1,000,000.00) on account of any one occurrence.

C. Property Damage Insurance in an amount not less than five hundred thousand dollars ($500,000.00) from damages on account of any one occurrence, with an aggregate limit of not less than one million dollars ($1,000,000.00).

D. Valuable Documents Insurance, whether as a part of the property damage insurance referenced above or as separate insurance, in an amount sufficient to cover all costs associated with repairing, restoring or replacing any documents kept or created by Consultant as a part of the Services, in the event of casualty to, or loss or theft of such documents.

E. Errors and Omissions Insurance, in an amount not less than one million dollars ($1,000,000.00) per incident; one million dollars ($1,000,000.00) aggregate.

F. Comprehensive Automobile Liability Insurance, with a combined single limit for bodily injury and property damage of not less than one million dollars ($1,000,000.00) per incident with respect to CONSULTANT's (owned, hired or non-owned) vehicles, assigned to or used in the performance of services.

The LPA shall be listed as a certificate holder of insurance on any of the insurance required under this CONTRACT.

In the event that the CONSULTANT retains any subcontractor or other personnel to perform SERVICES or carry out any activities under or incident to work on any project or phase of this CONTRACT, CONSULTANT agrees to obtain from said subcontractor or other personnel, certificates of insurance demonstrating that said subcontractor or other personnel has all of the above coverage, or to include said subcontractor or other personnel within CONSULTANT's coverage for the duration of said PROJECT or phase for which said subcontractor or other personnel is employed.

The Insurance coverage recited above shall be maintained in full force and effect by CONSULTANT during the life of this CONTRACT. Should CONSULTANT cease to carry the errors and omissions coverage listed above for any reason, it shall obtain "tail" coverage at the same limits for a period of not less than three (3)

years subsequent to policy termination or contract termination, whichever is longer. Should CONSULTANT change insurance carriers for errors and /or coverage, it shall obtain a "retroactive coverage" endorsement from its new insurance carrier.

Insurance carriers must be properly licensed and/or must hold a Certificate of Authority from the Mississippi Department of Insurance.

A certificate of insurance acceptable to the LPA shall be issued to the LPA by the CONSULTANT prior to the execution of this CONTRACT by the CONSULTANT and thereafter on an annual basis for the duration of this CONTRACT as evidence that policies providing the required coverage, conditions and limits are in full force and effect. Such certificate shall identify this CONTRACT and contain provisions that coverage afforded under the policies will not be cancelled, terminated, or materially altered until at least thirty (30) days prior written notice has been given to the LPA.

The CONSULTANT will furnish certified copies, upon request, of any or all of the policies and/or endorsements to the LPA prior to the execution of this CONTRACT and thereafter on an annual basis for the duration of this CONTRACT.

The CONSULTANT shall provide the LPA any and all documentation necessary to prove compliance with the insurance requirements of this CONTRACT as such documentation is requested, from time to time, by the LPA.

If the CONSULTANT fails to procure or maintain required insurance, the LPA may immediately elect to terminate this CONTRACT or, at its discretion, procure or renew such insurance and pay any and all premiums in connection therewith, and all monies so paid by the LPA shall be repaid by the CONSULTANT to the LPA upon demand, or the LPA may offset the cost of the premiums against any monies due to the CONSULTANT from the LPA.

ARTICLE XI. COVENANT AGAINST CONTINGENT FEES AND LOBBYING

The CONSULTANT shall comply with the relevant requirements of all federal, state or local laws. The CONSULTANT warrants that it has not employed or retained any company or person, other than a bona fide employee working solely for the CONSULTANT, to solicit or secure this CONTRACT, and that it has not paid or agreed to pay any company or person, other than a bona fide employee working solely for the CONSULTANT, any fee commission, percentage, brokerage fee, gifts or any other consideration contingent upon or resulting from the award or making of the CONTRACT. The CONSULTANT warrants that it shall not contribute any money, gift or gratuity of any kind, either directly or indirectly to any employee of the LPA, or to any employee of the Mississippi Department of Transportation. For breach or violation of this warranty, the LPA shall have the right to terminate this CONTRACT without liability, and the CONSULTANT shall forfeit any sums due hereunder at the time of such breach and may be barred from performing any future services for the LPA or participating in any future contracts with the LPA.

ARTICLE XII. EMPLOYMENT OF LPA'S PERSONNEL

The CONSULTANT shall not employ any person or persons in the employ of the LPA for any work required by the terms of this CONTRACT, without the written permission of the LPA, except as may otherwise be provided for herein.

ARTICLES XIII. MODIFICATION

If, prior to the satisfactory completion of the SERVICES under this CONTRACT, the LPA materially alters the scope, character, complexity or duration of the SERVICES from those required under this CONTRACT, a supplemental agreement may be executed between the parties. Also, a supplemental agreement may be executed between the parties in the event that both parties agree the CONSULTANT's compensation

should be increased due to an unanticipated increase in the nature, scope or amount of work necessary to properly provide the SERVICES required on any particular phase or project begun hereunder.

Oral agreements or conversations with the LPA, any individual member of the LPA, officer, agent, or employee of the Mississippi Department of Transportation, either before or after execution of this CONTRACT, shall not affect or modify any of the terms or obligations contained in this CONTRACT. All modifications to this CONTRACT, amendments or addenda thereto must be submitted in writing and signed by the parties thereto before any work is commenced.

The CONSULTANT may not begin work on any modifications, amendments, or addenda prior to receiving a Notice to Proceed.

Minor changes in the proposal which do not involve changes in the compensation, extensions of time or changes in the goals and objectives of the CONTRACT may be made by written notification of such change by either the LPA or the CONSULTANT to the other party, and shall become effective upon written acceptance thereof (i.e. letter agreement).

ARTICLE XIV. SUBLETTING, ASSIGNMENT OR TRANSFER

It is understood by the parties to this CONTRACT that the work of the CONSULTANT is considered personal by the LPA. The CONSULTANT shall not assign, sublet or transfer any or all of its interest in this CONTRACT without prior written approval of the LPA. Under no circumstances will CONSULTANT be allowed to sublet more than 60% of the work required under this contract. It is clearly understood and agreed that specific projects or phases of the work may be sublet in their entirety provided that CONSULTANT performs at least 40% of the overall contract with its own forces. Consent by the LPA to any subcontract shall not relieve CONSULTANT from any of its obligations hereunder, and CONSULTANT is required to maintain final management responsibility with regard to any such subcontract.

The LPA reserves the right to review all subcontract documents prepared in connection with this CONTRACT, and the CONSULTANT agrees that it shall submit to the LPA any proposed subcontract document together with subcontractor cost estimates for review and written concurrence of the LPA in advance of their execution.

ARTICLE XV. OWNERSHIP OF PRODUCTS AND DOCUMENTS AND WORK MADE FOR HIRE

The CONSULTANT agrees that all reports, computer information and access, drawings, studies, notes, maps and other data, prepared by and for them under the terms of this CONTRACT shall be delivered to, become and remain in the property of the LPA upon creation and shall be delivered to the LPA upon termination or completion of work, or upon request of the LPA regardless of any claim or dispute between the parties. All such data shall be delivered within thirty (30) days of receipt of a written request by the LPA.

The CONSULTANT and the LPA intend and agree that this CONTRACT to be a contract for services and each party considers the products and results of the services to be rendered by the CONSULTANT hereunder, including any and all material produced and/or delivered under this CONTRACT (the "Work"), to be a "work made for hire" under U.S. copyright and all applicable laws. The CONSULTANT acknowledges and agrees that the LPA owns all right, title, and interest in and to the Work including, without limitation, the copyright thereto and all trademark, patent, and all intellectual property rights thereto.

If for any reason the Work would not be considered a work made for hire under applicable law, or in the event this CONTRACT is determined to be other than a contract or agreement for a work made for hire, the CONSULTANT does hereby transfer and assign to the LPA, and its successors and assigns, the entire right, title, and interest in and to any Work prepared hereunder including, without limitation, the following:

the copyright and all trademark, patent, and all intellectual property rights in the Work and any registrations and copyright, and/or all other intellectual property, applications relating thereto and any renewals and extensions thereof; all works based upon, derived from, or incorporating the Work; all income, royalties, damages, claims, and payments now or hereafter due or payable with respect thereto; all causes of action, either in law or in equity, for past, present, or future infringement based on the copyrights and/or all other intellectual property; all rights, including all rights to claim priority, corresponding to the foregoing in the United States and its territorial possessions and in all foreign countries. The CONSULTANT agrees to execute all papers and perform such other proper acts as the LPA may deem necessary to secure for the LPA or its designee the rights herein assigned.

The LPA may, without any notice or obligation of further compensation to the CONSULTANT, publish, re-publish, anthologize, use, disseminate, license, or sell the Work in any format or medium now known or hereafter invented or devised. The LPA'S rights shall include, without limitation, the rights to publish, re-publish, or license a third party to publish, re-publish, or sell the Work in print, on the World Wide Web, or in any other electronic or digital format or database now known or hereafter invented or devised, as a separate isolated work or as part of a compilation or other collective work, including a work different in form from the first publication, and to include or license a third party to include the Work in an electronic or digital database or any other medium or format now known or hereafter invented or devised.

The CONSULTANT shall obtain any and all right, title, and interest to all input and/or material from any third party subconsultant, or any other party, who may provide such input and/or material to any portion of the Work so that said right, title, and interest, and all such interest in and to the Work including, without limitation, the copyright thereto and all trademark, patent, and all intellectual property rights thereto, shall belong to the LPA.

For any intellectual property rights currently owned by third parties or by the CONSULTANT and not subject to the terms of this CONTRACT, the CONSULTANT agrees that it will obtain or grant royalty-free, nonexclusive, irrevocable license(s) for or to the LPA at no cost to the LPA to use all copyrighted or copyrightable work(s) and all other intellectual property which is incorporated in the material furnished under this CONTRACT. Further, the CONSULTANT warrants and represents to the LPA that it has obtained or granted any and all such licensing prior to presentation of any Work to the LPA under this CONTRACT. This obligation of the CONSULTANT does not apply to a situation involving a third party who enters a license agreement directly with the LPA.

The CONSULTANT warrants and represents that it has not previously licensed the Work in whole or in part to any third party and that use of the Work in whole or in part will not violate any rights of any kind or nature whatsoever of any third party. The CONSULTANT agrees to indemnify and hold harmless the LPA, its successors, assigns and assignees, and its respective officers, directors, agents and employees, from and against any and all claims, damages, liabilities, costs and expenses (including reasonable attorneys' fees), arising out of or in any way connected with any breach of any representation or warranty made by CONSULTANT herein.

ARTICLE XVI. PUBLICATION AND PUBLICITY

The CONSULTANT agrees that it shall not for any reason whatsoever communicate to any third party, with the exception of the MDOT and the FHWA, in any manner whatsoever concerning any of its CONTRACT work product, its conduct under the CONTRACT, the results or data gathered or processed under this CONTRACT, which includes, but is not limited to, reports, computer information and access, drawings, studies, notes, maps and other data prepared by and for the CONSULTANT under the terms of this CONTRACT, without prior written approval from the LPA, unless such release or disclosure is required by judicial proceeding. The CONSULTANT agrees that it shall immediately refer any third party who requests such information to the LPA and shall also report to the LPA any such third party inquiry, with the exception of the MDOT and/or the FHWA. This Article shall not apply to information in whatever form

that comes into the public domain, nor shall it restrict the CONSULTANT from giving notices required by law or complying with an order to provide information or data when such order is issued by a court, administrative agency or other authority with proper jurisdiction, or if it is reasonably necessary for the CONSULTANT to defend itself from any suit or claim.

IT IS FURTHER AGREED, that all approved releases of information, findings, and recommendations shall include a disclaimer provision and that all published reports shall include that disclaimer on the cover and title page in the following form:

The opinions, findings, and conclusions in this publication are those of the author(s) and not necessarily those of the Local Public Agency, Mississippi Department of Transportation, Mississippi Transportation Commission, the State of Mississippi, or the Federal Highway Administration.

ARTICLE XVII. CONTRACT DISPUTES

This CONTRACT shall be deemed to have been executed in **Forrest County**, Mississippi, and all questions including, but not limited to, questions of interpretation, construction and performance shall be governed by the laws of the State of Mississippi, excluding its conflicts of laws provisions, and any litigation with respect to this CONTRACT shall be brought in a court of competent jurisdiction in **Forrest County**, State of Mississippi. The CONSULTANT expressly agrees that under no circumstances shall the LPA be obligated to or responsible for payment of an attorney's fee for the cost of legal action to or on behalf of the CONSULTANT.

ARTICLE XVIII. COMPLIANCE WITH APPLICABLE LAW

A. The undersigned certify that to the best of their knowledge and belief, the foregoing is in compliance with all applicable laws.

B. The CONSULTANT shall observe and comply with all applicable federal, state, and local laws, rules and regulations, policies and procedures, ordinances, and orders and decrees of bodies or tribunals of the United States of America or any agency thereof, the State of Mississippi or any agency thereof, and any local governments or political subdivisions, that are in effect at the time of the execution of this CONTRACT or that may later become effective.

C. The CONSULTANT shall not discriminate against any employee nor shall any party be subject to discrimination in the performance of this CONTRACT because of race, creed, color, sex, national origin, age or disability.

D. IT IS FURTHER SPECIFICALLY AGREED that the CONSULTANT shall comply and shall require its subcontractors to comply with the regulations for COMPLIANCE WITH TITLE VI OF THE CIVIL RIGHTS ACT OF 1964, as amended, and all other applicable federal regulations as stated in "Exhibit 5" which is incorporated herein by reference.

E. It is agreed that the CONSULTANT will comply with the provisions set forth in Department of Transportation, 49 CFR, Section 18, Et Seq., regarding Uniform Administrative Requirements for Grants and Cooperative agreements in its administration of this CONTRACT or any subcontract resulting herefrom.

F. The CONSULTANT agrees that it will abide by the provisions of 49 CFR Section 26 regarding disadvantaged business enterprises and include the certification made in "Exhibit 5" to this CONTRACT in any and all subcontracts which may result from this CONTRACTS.

G. The CONSULTANT shall comply and shall require its subconsultants to comply with Code of Federal Regulations CFR 23 Part 634 - Worker Visibility – as stated in "Exhibit 5".

H. IMMIGRANT STATUS CERTIFICATION. The CONSULTANT represents that it is in compliance with the Immigration Reform and Control Act of 1986 (Public Law 99-603), as amended, in relation to all employees performing work in the State of Mississippi and does not knowingly employ persons in violation of the United States immigration laws. The CONSULTANT further represents that it is registered and participating in the Department of Homeland Security's E-Verify™ employment eligibility verification program, or successor thereto, and will maintain records of compliance with the Mississippi Employment Protection Act including, but not limited to, requiring compliance certification from all subcontractors and vendors who will participate in the performance of this Agreement and maintaining such certifications for inspection if requested. The CONSULTANT acknowledges that violation may result in the following: (a) cancellation of any public contract and ineligibility for any public contract for up to three (3) years, or (b) the loss of any license, permit, certification or other document granted by an agency, department or governmental entity for the right to do business in Mississippi for up to one (1) year, or (c) both. The CONSULTANT also acknowledges liability for any additional costs incurred by the LPA due to such contract cancellation or loss of license or permit. The CONSULTANT is required to provide the certification on Exhibit 9 in this CONTRACT to the LPA verifying that the CONSULTANT and subconsultant(s) are registered and participating in E-Verify prior to execution of this CONTRACT

I. The covenants herein shall, except as otherwise provided, accrue to the benefit of and be binding upon the successors and assigns of the parties hereto.

ARTICLE XIX. WAIVER

Failure of either party hereto to insist upon strict compliance with any of the terms, covenants, and conditions hereof shall not be deemed a waiver or relinquishment of any similar right or power hereunder at any subsequent time, or of any other provision hereof, nor shall it be construed to be a modification of the terms of this CONTRACT.

ARTICLE XX. SEVERABILITY

If any terms or provisions of this CONTRACT are prohibited by the laws of the State of Mississippi or declared invalid or void by a court of competent jurisdiction, the remainder of this CONTRACT shall not be affected thereby and each term and provision of this CONTRACT shall be valid and enforceable to the fullest extent permitted by law.

ARTICLE XXI. ENTIRE AGREEMENT

This CONTRACT constitutes the entire agreement of the parties with respect to the subject matter contained herein and supersedes and replaces any and all prior negotiations, understandings, and agreements, written or oral, between the parties relating thereto.

ARTICLE XXII. CONFLICT OF INTEREST

The CONSULTANT covenants that no public or private interests exist and none shall be acquired directly or indirectly which would conflict in any manner with the performance of the CONSULTANT'S CONTRACT. The CONSULTANT further covenants that no employee of the CONSULTANT or of any subconsultant(s), regardless of his/her position, is to personally benefit directly or indirectly from the performance of the SERVICES or from any knowledge obtained during the CONSULTANT'S execution of this CONTRACT.

ARTICLE XXIII. AVAILABILITY OF FUNDS

It is expressly understood and agreed that the obligation of the LPA to proceed under this CONTRACT is conditioned upon the availability of funds, the appropriation of funds by the Mississippi Legislature, and the receipt of state and/or federal funds. If, at any time, the funds anticipated for the fulfillment of this CONTRACT are not forthcoming or are insufficient, either through the failure of the federal government to provide funds or of the State of Mississippi to appropriate funds or the discontinuance or material alteration of the program under which funds were provided, or if funds are not otherwise available to the LPA for the performance of this CONTRACT, the LPA shall have the right, upon written notice to the CONSULTANT, to immediately terminate or stop work on this CONTRACT without damage, penalty, cost, or expense to the LPA of any kind whatsoever. The effective date of termination shall be as specified in the notice of termination.

ARTICLE XXIV. STOP WORK ORDER

A. **Order to Stop Work.** The LPA may, by written order to the CONSULTANT at any time, and without notice to any surety, require the CONSULTANT to stop all or any part of the work called for by this CONTRACT. This order shall be for a specified period not exceeding twenty-four (24) months after the order is delivered to the CONSULTANT unless the parties agree to any further period. Any such order shall be identified specifically as a stop work order issued pursuant to this clause. Upon receipt of such an order, the CONSULTANT shall forthwith comply with its terms and take all steps to minimize the occurrence of costs allocable to the work covered by the order during the period of work stoppage. Before the stop work order expires, or within any further period to which the parties shall have agreed, the LPA shall either:

(1) cancel the stop work order; or

(2) terminate the work covered by such order according to and as provided in Article III of this CONTRACT.

Prior to the LPA'S taking official action to stop work under this CONTRACT, the Executive Director of MDOT may notify the CONSULTANT, in writing, of MDOT'S intentions to ask the LPA to stop work under this CONTRACT. Upon notice from the Executive Director of MDOT, CONSULTANT shall suspend all activities under this CONTRACT, pending final action by the LPA.

B. **Cancellation or Expiration of the Order.** If a stop work order issued under this clause is canceled at any time during the period specified in the order, or if the period of the order or any extension thereof expires, the CONSULTANT shall have the right to resume work. If the LPA decides that it is justified, an appropriate adjustment may be made in the delivery schedule. If the stop work order results in an increase in the time required for or in the CONSULTANT'S cost properly allocable to the performance of any part of this CONTRACT and the CONSULTANT asserts a claim for such an adjustment within 30 days after the end of the period of work stoppage, an equitable adjustment in this CONTRACT may be made by written modification of this CONTRACT as provided by the terms of this CONTRACT.

C. **Termination of Stopped Work.** If a stop work order is not canceled and the work covered by such order is terminated, the CONSULTANT may be paid for services rendered prior to the Termination. In addition to payment for services rendered prior to the date of termination, the LPA shall be liable only for the costs, fees, and expenses for demobilization and close out of this CONTRACT, based on actual time and expenses incurred by the CONSULTANT in the packaging and shipment of all documents covered by this CONTRACT to the LPA. In no event shall the LPA be liable for lost profits or other consequential damages.

ARTICLE XXV. KEY PERSONNEL & DESIGNATED AGENTS

CONSULTANT agrees that Key Personnel identified as assigned to this PROJECT shall not be changed or reassigned without prior approval of the LPA or, if prior approval is impossible, and then notice to the LPA and subsequent review by the LPA which may approve or disapprove the action. For purposes of implementing this section and all other sections of this CONTRACT with regard to notice, the following individuals are herewith designated as agents for the respective parties unless otherwise identified in the addenda hereto:

LPA:

For Contractual Matters:

Bert Kuyrkendall, PE
212 Front Street
Hattiesburg, MS 39401
(601) 545-4540
(601) 545-4642 Fax
bkuyrkendall@hattiesburgms.com

For Technical Matters:

Bert Kuyrkendall, PE
212 Front Street
Hattiesburg, MS 39401
(601) 545-4540
(601) 545-4642 Fax
bkuyrkendall@hattiesburgms.com

CONSULTANT:

For Contractual Matters:

Michael W. Essary, PE
704 Hardy Street
Hattiesburg, MS 39401
(601) 545-1565
(601) 545-2267 Fax
michael.essary@neel-schaffer.com

Licensure Number
from the Mississippi
Board of Licensure
for Professional
Engineers and Surveyors:

P.E. #11856

For Technical Matters:

Geoffrey Crosby, PE
704 Hardy Street
Hattiesburg, MS 39401
(601) 545-1565
(601) 545-2267 Fax
geoffrey.crosby@neel-schaffer.com

Licensure Number
from the Mississippi
Board of Licensure
for Professional
Engineers and Surveyors:

P.E. #19984

ARTICLE XXVI. AUTHORIZATION

Both parties hereto represent that they have authority to enter into this CONTRACT and that the individuals executing this CONTRACT are authorized to execute it and bind their respective parties and certified copies of the applicable LPA Order and the Resolution of the Corporate Board of Directors of the CONSULTANT are attached hereto as "Exhibit 1" and incorporated herein by reference and made a part hereof as if fully copied herein in words and figures.

WITNESS this my signature in execution hereof, this the 6th day of Nov., 2012.

City of Hattiesburg

Johnny L. DuPree, Ph.D., Mayor

WITNESS this my signature in execution hereof, this the ____ day of _____, 20___.

Neel-Schaffer, Inc.

BY:_____

Michael W. Essary

ATTEST:_____

Exhibits attached hereto and incorporated by reference into this contract include those identified on the attached page entitled "List of Exhibits".

LIST OF EXHIBITS

1. Evidence of Authority
2. General Scope of Work and Common Specifications
3. Fees and Expenses.
4. Sample Invoice
5. Notice to the CONSULTANT
6. CONSULTANT's Certification Regarding Debarment, Suspension and Other Responsibility Matters.
7. Certification of LPA
8. {*This Exhibit was intentionally left blank*}
9. Prime Consultant EEV Certification and Agreement

EXHIBIT 1

{{{{Attach a copy of authority to execute contracts on behalf of the LPA}}}}

{{{{Attach a copy of authority to execute contracts on behalf of the Consultant Corporation here}}}}

EXHIBIT 2

Scope of Work

The preliminary engineering work in the Woodley Elementary, Hattiesburg Safe Routes to School Project involves providing construction plans for the installation of sidewalks at Woodley Elementary School.

The Woodley Elementary School Sidewalk Installations will occur along 21st Avenue from Quinn Street to Hardy Street, along O'Ferral Street from 23rd Avenue to 21st Avenue, along O'Ferral Street from 20th Avenue to Patton Avenue, and along Pearl Street from 22nd Avenue to 21st Avenue

Woodley Elementary Sidewalk Installation - Proposed Project Schedule

Task	Description	Est Start	Est Complete
1	Create development standards relating to drainage, sidewalks, signage, and striping	11/01/2012	11/15/2012
2	Carryout sidewalk design and plan production. Complete plans and specification package	11/15/2012	7/31/2013

EXHIBIT 3

FEES AND EXPENSES

The LPA shall pay the CONSULTANT on an actual cost-plus fixed-fee with an upset limit for the satisfactory completion of the Scope of Work set forth under "Exhibit 2", hereto, for all salaries, payroll additives, overhead, direct costs and CONSULTANT's fixed fees attributable to this CONTRACT.

Actual costs as the term is used herein shall include all direct salaries, payroll additives, overhead and direct cost. Direct salaries are those amounts actually paid to the person performing the SERVICES which are deemed reasonably necessary by the LPA for the advancement of the Scope of Work. Overtime work is not contemplated by this contract. Accordingly, direct salaries chargeable to this contract shall not include any overtime premium. Salaries for officers, principals or partners shall not increase at a rate in excess of that for other employees. Payroll additives and overhead consist of employee fringe benefits and that part of CONSULTANT's allowable indirect costs attributable to this contract. Direct Costs are those charges deemed reasonably necessary by the LPA for the successful completion of the Scope of Work which are charged directly to the project and not included in overhead.

Fixed fee as the term is used herein shall mean a dollar amount established to cover the CONSULTANT's profit and business expenses not allocable to overhead for the successful completion of the SERVICES.

SCHEDULE OF MAXIMUM RATES, EXPENSES & FEES:

The following schedule of rates for services will not be exceeded for all work under this CONTRACT:

Direct Salaries:

Direct salaries shall not exceed those amounts actually paid to an employee performing services reasonably necessary for the completion of the Scope of Work set forth under "Exhibit 2" to this contract.

All charges for services must be substantiated by supporting data, i.e. certified time sheets, daily logs, check stubs, pay vouchers, etc.

Payroll Additive & Overhead:

The rate, based on the CONSULTANT'S latest governmental audited rate, not to exceed two (2) years, and as approved by MDOT, for payroll additives and overhead shall be computed at **152.26%(FCCM: 0.26 %)** of direct salary cost. This rate shall be used to calculate costs under this CONTRACT and in the preparation of costs estimates for Supplemental Agreements under this CONTRACT. The estimated FCCM for cost proposals in Supplemental Agreements must be specially identified and distinguished from the other costs. Profit/Fee shall not include amounts applicable to FCCM. Final payment of these costs shall be adjusted after completion of the final audit to reflect the actual rates experienced by the CONSULTANT during the course of this CONTRACT; however, in no event shall such an adjustment allow the CONTRACT'S cost to exceed the maximum limitation stated. Said audit of the CONSULTANT will be conducted by the LPA, or the LPA's designated auditor at the conclusion of the contract in accordance with Federal and LPA requirements.

All overhead rates submitted to MDOT for approval shall comply with the AASHTO Audit Guide, 2010, as amended. In addition, the CONSULTANT shall submit written certification in accordance with FHWA Order 4470.1A, as amended,

that the indirect cost rate submitted does not include any costs which are expressly unallowable and the indirect cost rate was established only with allowable costs in accordance with the applicable cost principles contained in the Federal Acquisition Regulations (FAR) of 48 CFR part 31.

Direct Costs:

The LPA will reimburse the CONSULTANT's actual documented expenses; or the amount allowable under the current edition of the MDOT State Travel Handbook, whichever is lower. Except as otherwise specifically provided herein, the procedures generally outlined in the MDOT State Travel Handbook shall govern the allowability of any expense reimbursement. (i.e. no meal reimbursement when there is no overnight stay).

All direct costs (except meals) must be substantiated by supporting data, i.e. mileage, log books, receipts, etc.

All other expenses will be reimbursed upon receipt of acceptable paid invoices.

Fixed Fee:

The CONSULTANT's fixed fee shall be **$251.55**, which sum shall be paid incrementally each month in an amount determined by multiplying the total fixed fee by the project completion percentage, less any amounts previously paid for fixed fees.

Contract Maximums:

Under no circumstances shall the amount payable by the LPA for this assignment exceed $ 2,498.71 (Total of all Charges) without the prior written consent of both parties.

Fee and Expense Summary

Labor Cost & Overhead	Direct Cost	Fixed Fee	FCCM	Sub-Consultant	Total
$831.00	$148.72	$251.55	$2.16	$0	$2,498.71

****See Delineation of Cost Breakdown behind Exhibit 9.**

EXHIBIT 4
SAMPLE INVOICE

LOCAL PUBLIC AGENCY
ADDRESS
CITY, STATE, ZIP CODE DATE:

ATTENTION: ACCOUNTS PAYABLE

INVOICE NO. 0000
PERIOD _____, 20__ THROUGH ____, 20__
PROFESSIONAL SERVICES IN ACCORDANCE WITH
CONTRACT DATED_____, 20__, AS RELATES TO
PROJECT NO. ___-___-____-____-____ IN_____ COUNTY, HIGHWAY_____.

CONSULTANT:
CUSTOMER NUMBER 0000000000 FILE NO. 000-000000
REPORT NUMBER: 0000 through 00000

	CURRENT PERIOD	PREVIOUS ESTIMATE	TOTAL ALLOWED TO DATE
DIRECT SALARIES	$	$	$
* PAYROLL ADDITIVE (less FCCM)	$	$	$
FIXED FEE (% complete X total fee less amounts previously paid – not to exceed 75%)	$	$	$
PAYROLL ADDITIVE w/ FCCM only	$	$	$
** DIRECT COSTS	$	$	$
PROJECT TOTAL	$	$	$
AMOUNT DUE THIS INVOICE:	$	$	$

NOTE:
1. * PAYROLL ADDITIVES (INCLUDING ALL FRINGE BENEFITS & OVERHEAD-)
2. ** DIRECT COSTS (ATTACH SUPPORTING DATA)
3. THE CONSULTANT MAY USE ITS OWN INVOICE FORM SO LONG AS IT HAS BEEN APPROVED. PRIOR TO SUBMISSION BY THE CONSULTANT SAID FORM SHOULD, AT A MINIMUM, CONTAIN THE ABOVE INFORMATION

SUPPORTING DATA

Project No. 00-0000-00-000-00
County _____

Employee and Classification	Rate of Pay	Current Period Hours	Current Period Costs	Previous Period Costs	Costs To Date
DIRECT LABOR AND DIRECT COSTS					
John P. Public, Jr Engineer	0.00	0.0	0.00	0.00	0.00
John P. Public, Jr Designer	0.00	0.0	0.00	0.00	0.00
John P. Public, Jr Engineer	0.00	0.0	0.00	0.00	0.00
John P. Public, Jr Technician	0.00	0.0	0.00	0.00	0.00
Sub Total		0.0	0.00	0.00	0.00
Payroll Additives (minus FCCM)			0.00	0.00	0.00
Total Labor			0.00	0.00	0.00
Fixed Fee			0.00	0.00	0.00
Payroll additives w/ only FCCM (Direct Labor * FCCM)			0.00	0.00	0.00
Direct Costs			0.00	0.00	0.00
Project Total			0.00	0.00	0.00

EXHIBIT 5

NOTICE TO CONTRACTORS, FEDERAL-AID CONTRACT COMPLIANCE WITH TITLE VI OF THE CIVIL RIGHTS ACT OF 1964 COPELAND ANTI-KICKBACK ACT, DAVIS BACON ACT CONTRACT WORK HOURS AND SAFETY STANDARDS ACT CLEAN AIR ACT, ENERGY POLICY AND CONSERVATION ACT DISADVANTAGED BUSINESS ENTERPRISES, WORKER VISIBILITY

During the performance of this CONTRACT, the CONSULTANT, for itself, its assignees and successor-in-interest (hereinafter referred to as the "CONSULTANT") agrees as follows:

1. Compliance with Regulations: The CONSULTANT will comply with the Regulations of the Department of Transportation relative to nondiscrimination in Federally-assisted programs of the Department of Transportation (Title 49, Code of Federal Regulations, Part 21, hereinafter referred to as the "Regulations"), which are herein incorporated by reference and made a part of this CONTRACT.

2. Nondiscrimination: The CONSULTANT, with regard to the work performed by it after award and prior to completion of the contract work, will not discriminate on the grounds of race, religion, color, sex, national origin, age or disability in the selection and retention of subcontractors including procurement of materials and leases of equipment. The CONSULTANT will not participate either directly or indirectly in the discrimination prohibited by Section 21.5 of the Regulations, including employment practices when the CONTRACT covers a program set forth in Appendix B of the Regulations. In addition, the CONSULTANT will not participate either directly or indirectly in discrimination prohibited by 23 C.F.R. 710.405(b).

3. Solicitations for Subcontracts. Including Procurement of Materials and Equipment: In all Solicitations, either by competitive bidding or negotiation made by the CONSULTANT for work to be performed under a subcontract, including procurement of materials or equipment, each potential subcontractor or supplier shall be notified by the CONSULTANT of the CONSULTANT's obligations under this CONTRACT and the Regulations relative to nondiscrimination on the grounds of race, religion, color, sex, national origin, age or disability.

4. Anti-kickback provisions: All contracts and subcontracts for construction or repair shall include a provision for compliance with the Copeland "Anti-Kick Back" Act (18 U.S.C. 874) as supplemented in Department of Labor regulations (29 CFR, Part 3). This Act provides that each contractor or subcontractor shall be prohibited from inducing, by any means, any person employed in the construction, completion, or repair of public work, to give up any part of the compensation to which he is otherwise entitled. The CONSULTANT shall report all suspected or reported violations to the LPA.

5. Davis Bacon Act: When required by the federal grant program legislation, all construction contracts awarded to contractors and subcontractors in excess of $2,000 shall include a provision for compliance with the Davis-Bacon Act (40 U.S.C. 276a to a-7) and as supplemented by Department of Labor regulations (29 CFR, Part 5). Under this Act, contractors shall be required to pay wages to laborers and mechanics at a rate not less than the minimum wages specified in a wage determination made by the Secretary of Labor. In addition, contractors shall be required to pay wages specified in a wage determination made by the Secretary of Labor. In addition, contractors shall be required to pay wages specified in a wage determination made by the Secretary of Labor. In addition, contractors shall be required to pay wages not less often than once a week.

6. Contract Work Hours and Safety Standards Act: Where applicable, all contracts awarded by or to contractors and subcontractors in excess of $100,000 which involve the employment of mechanics or laborers shall include a provision for compliance with sections 103 and 107 of the Contract Work Hours and Safety Standards Act (40 U.S.C. 327-330) as supplemented by Department of Labor Regulations (29 CFR, Part 5). Under section 103 of the Act, each contractor shall be required to compute the wages of every mechanic and

laborer on the basis of a standard work week of 40 hours. Work in excess of the standard work week is permissible provided that the worker is compensated at a rate of not less than 1 1/2 times the basic rate of pay for all hours worked in excess of 40 hours in the work week. Section 107 of the Act is applicable to construction work and provides that no laborer or mechanic shall be required to work in surroundings or under working conditions which are unsanitary, hazardous, or dangerous to his health and safety as determined under construction, safety, and health standards promulgated by the Secretary of Labor. These requirements do not apply to the purchases of supplies or materials or articles ordinarily available on the open market, or contracts for transportation or transmission of intelligence.

7. Clean Air Act: Compliance with all applicable standards, orders, or requirements issued under section 306 of the Clear Air Act (42 U.S.C. 1857 (h), Section 508 of the Clean Water Act (33 U.S.C. 1368), Executive Order 11738, and Environmental Protection Agency regulations (40 CFR Part 15) (Contracts and subcontracts in amounts in excess of $100,000).

8. Energy Policy and Conservation Act: Mandatory standards and policies relating to energy efficiency which are contained in the state energy conservation plan issued in compliance with the Energy Policy and Conservation Act (Pub. L. 94-163).

9. Disadvantaged Business Enterprises: It is the policy of the Mississippi Department of Transportation to comply with the requirements of 49 C.F.R. 26, to prohibit unlawful discrimination, to meet it's goal for DBE participation, to meet that goal whenever possible by race-neutral means, to create a level playing field, and to achieve that amount of DBE participation that would be obtained in an non-discriminatory market place. To meet that objective in any United States Department of Transportation assisted contracts, the LPA and the CONSULTANT shall comply with the "Mississippi Department of Transportation's Disadvantaged Business Enterprise Programs For United States Department Of Transportation Assisted Contracts".

Neither the CONSULTANT (Contractor), nor any sub-recipient or sub-contractor shall discriminate on the bases of race, color, national origin, or sex in the performance of this contract. The CONSULTANT (Contractor) shall carry out applicable requirements of 49 C.F.R. 26 in the award and administration of United States Department of Transportation assisted contracts. Failure of the CONSULTANT (Contractor) to carry out those requirements is a material breach of the contract which may result in the termination of this contract or such other remedies as the Mississippi Department of Transportation deems appropriate.

10. Worker Visibility: All workers within the right-of-way of a Federal-aid highway who are exposed either to traffic (vehicles using the highway for the purposes of travel) or to construction equipment within the work area shall wear high-visibility safety apparel – personal protective safety clothing that is intended to provide conspicuity during both daytime and nighttime usage, and that meets the Performance Class 2 or 3 requirements of the ANSI/ISEA 107–2004 publication entitled "American National Standard for High-Visibility Safety Apparel and Headwear" – for compliance with 23 CFR, Part 634.

EXHIBIT 6

CERTIFICATION REGARDING DEBARMENT, SUSPENSION AND OTHER RESPONSIBILITY MATTERS

CERTIFICATION REGARDING DEBARMENT, SUSPENSION, AND OTHER RESPONSIBILITY MATTERS - Certification in accordance with Section 29.510 Appendix A, C.F.R./Vol. 53, No. 102, page 19210 and 19211:

(1) The CONSULTANT certifies to the best of its knowledge and belief that it and its principals:

(a) are not presently debarred, suspended, proposed for debarment, declared ineligible, or voluntarily excluded from covered transactions by any federal department or agency;

(b) have not within a three-year period preceding this proposal been convicted of or had a civil judgment rendered against them for commission of fraud or a criminal offense in connection with obtaining, attempting to obtain, or performing a public (federal, state or local) transaction or contract under a public transaction, violation of federal or state antitrust statutes or commission of embezzlement, theft, forgery, bribery, falsification or destruction of records, making false statements, or receiving stolen property;

(c) are not presently indicted for or otherwise criminally or civilly charged by a governmental entity (federal, state or local) with commission of any of the offenses enumerated in paragraph (l)(b) of this certification: and

(d) have not within a three-year period preceding this application/proposal had one or more public transactions (federal, state or local) terminated for cause or default;

(e) has not either directly or indirectly entered into any agreement participated in any collusion; or otherwise taken any action in restraint of free competitive negotiation in connection with this CONTRACT.

(2) The CONSULTANT further certifies, to the best of his/her knowledge and belief, that:

(f) No federal appropriated funds have been paid or will be paid to any person for influencing or attempting to influence an officer or employee of any Federal agency, a member of Congress, an officer or employee of Congress, or employee of a member of Congress in connection with the awarding of any Federal loan, the entering into of any cooperative agreement, and the extension, continuation, renewal, amendment, or modification of any Federal contract, grant, loan, or cooperative agreement.

(g) If any funds other than Federal appropriated funds have been paid or will be paid to any person for influencing or attempting to influence an officer of employee of Congress, or any employee of a member of Congress in connection with this CONTRACT, Standard Form-LLL, "Disclosure Form to Report Lobbying", in accordance with its instructions will be completed and submitted.

The certification contained in (1) and (2) above is a material representation of fact upon which reliance is placed and a pre-requisite imposed by Section 1352, Title 31, U. S. Code prior to entering into this CONTRACT. Failure to comply shall be subject to a civil penalty of not less than $10,000 and not more than $100,000. The CONSULTANT shall include the language of the certification in all subcontracts exceeding $100,000 and all sub-contractors shall certify and disclose accordingly.

I hereby certify that I am the duly authorized representative of the CONSULTANT for purposes of making this certification, and that neither I, nor any principal, officer, shareholder or employee of the above firm has:

(a) employed or retained for commission, percentages, brokerage, contingent fee, or other consideration, any firm or person (other than a bona fide employee working solely for me or the above consultant) to solicit or secure this agreement,

(b) agreed, as an express or implied condition for obtaining this CONTRACT, to employ or retain the services of any firm or person in connection with carrying out the agreement, or

(c) paid, or agreed to pay, to any firm, organization or person (other than a bone fide employee working solely for me or the above consultant) any fee, contribution, donation, or consideration of any kind for, or in connection with, procuring or carrying out the agreement; except as herein expressly stated (if any).

I acknowledge that this Agreement may be furnished to the Federal Highway Administration, United States Department of Transportation, in connection with the Agreement involving participation of Federal-Aid Highway funds, and is subject to applicable state and federal laws, both criminal and civil.

SO CERTIFIED this _____ day of _____, 20____.

CONSULTANT

BY: _____

Michael W. Essary

ATTEST: _____

My Commission Expires: _____

Notary

EXHIBIT 7

CERTIFICATION OF THE LPA

I hereby certify that I am the Chief Administrative Official, duly authorized by the LPA to execute this certification and that the above consulting firm or its representative has not been required, directly or indirectly, as an express or implied condition in connection with obtaining or carrying out this agreement to:

(a) employ or retain, or agree to employ or retain, firm or person, or

(b) pay, or agree to pay, to any firm, person organization, any fee, contribution, donation, or consideration of any kind except as here expressly stated (if any).

SO CERTIFIED on the 6th day of Nov., 20 __.

LPA City of Hattiesburg

Johnny L. DuPree, Ph.D., Mayor

EXHIBIT 8

{Intentionally Left Blank}

EXHIBIT 9

PRIME CONSULTANT / CONTRACTOR EEV CERTIFICATION AND AGREEMENT

By executing this Certification and Agreement, the undersigned verifies its compliance with the, "Mississippi Employment Protection Act," Section 71-11-3 of the Mississippi Code of 1972, as amended, and any rules or regulations promulgated by the LPA, Mississippi Transportation Commission [MTC], Department of Employment Security, State Tax Commission, Secretary of State, Department of Human Services in accordance with the Mississippi Administrative Procedures Law (Section 25-43-1 et seq., Mississippi Code of 1972, as amended), stating affirmatively that the individual, firm, or corporation which is contracting with the LPA has registered with and is participating in a federal work authorization program* operated by the United States Department of Homeland Security to electronically verify information of newly hired employees pursuant to the Immigration Reform and Control Act of 1986, Pub.L. 99-603,100 Stat 3359, as amended. The undersigned agrees to inform the LPA if the undersigned is no longer registered or participating in the program.

The undersigned agrees that, should it employ or contract with any entity(s) in connection with the performance of this CONTRACT, the undersigned will secure from such entity(s) verification of compliance with the Mississippi Employment Protection Act. The undersigned further agrees to maintain records of such compliance and provide a copy of each such verification to the LPA, if requested, for the benefit of the LPA or this CONTRACT.

128686
EEV* Company Identification Number [Required]

The undersigned certifies that the above information is complete, true and correct to the best of my knowledge and belief. The undersigned acknowledges that any violation may be subject to the cancellation of the contract, ineligibility for any state or public contract for up to three (3) years, the loss of any license, permit, certificate or other document granted by any agency, department or government entity for the right to do business in Mississippi for up to one (1) year, or both, any and all additional costs incurred because of the contract cancellation or the loss of any license or permit, and may be subject to additional felony prosecution for knowingly or recklessly accepting employment for compensation from an unauthorized alien as defined by 8 U.S.C §1324a(h)(3), said action punishable by imprisonment for not less than one (1) year nor more than five (5) years, a fine of not less than One Thousand Dollars ($1,000.00) nor more than Ten Thousand Dollars ($10,000.00), or both, in addition to such prosecution and penalties as provided by Federal law.

BY:_____ _____
Authorized Officer or Agent Date

Michael W. Essary _____
Printed Name of Authorized Officer or Agent Title of Authorized Officer or Agent of Contractor / Consultant

SWORN TO AND SUBSCRIBED before me on this the _____ day of _____, 20____.

_____
NOTARY PUBLIC
My Commission Expires: _____

* As of the effective date of the Mississippi Employment Protection Act, the applicable federal work authorization program is E-Verify™ operated by the U. S. Citizenship and Immigration Services of the U.S. Department of Homeland Security, in conjunction with the Social Security Administration.

City of Hattiesburg / Neel-Schaffer, Inc.
SRSP 0210-00(024) LPA / 106139-411000
O'Ferral from 23rd to Patton, 21st from Quinn to Hardy, Pearl from 22nd to 21st

Classification	Hours	Rate of Pay	Extension
Principle	1	$56.00	$56.00
Project Manager	20	$30.00	$600.00
Engineer			$0.00
CADD	2	$27.50	$55.00
Clerical	6	$20.00	$120.00
Labor Classification			$0.00
Labor Classification			$0.00
Labor Classification			$0.00
Labor Classification			$0.00
Labor Classification			$0.00
Labor Classification			$0.00
Labor Classification			$0.00
Raw Labor			**$831.00**

Overhead Rate	152.26	%	$1,265.28
(Enter appropriate overhead rate (home or field) - FCCM in cell C20)			
Total Labor + O/H			$2,096.28
Fixed Fee	12	%	$251.55
(Enter FF % in cell C25)			
FCCM Overhead	0.26	%	$2.16
(Enter FCCM in C28)			

Direct Costs:	Qty.	Unit Price[1]	
Mileage	57	$0.36	$20.52
Meals			$0.00
Lodging			$0.00
Postage	47	$0.44	$20.68
Supplies	1	$35.70	$35.70
Reproductions	798	$0.09	$71.82
Other			$0.00
Total Direct Cost			$148.72

Subconsultant Cost [2]:			
Subconsultant A			$0.00
Subconsultant B			$0.00
Total Subconsultant Cost			$0.00

[1] See State Travel Handbook

[2] All subs must provide back-up and contain MDOT approved overhead rates

Project Total	**$2,498.71**

Geoffrey Crosby, P.E.

Education

Bachelor of Science, 2005,
Civil Engineering,
Mississippi State University

Registrations

Professional Engineer:
Mississippi, 19984

Associations

National Society of
Professional Engineers

Mississippi
Engineering Society

Professional History

Mr. Crosby joined Neel-Schaffer, Inc. July 2007 with two years experience in civil engineering projects. Prior to joining the firm, Mr. Crosby's work experience included design of residential and commercial developments, and preparing SWPPP's and hydraulic studies for the railroad. Mr. Crosby was responsible for the design of projects that involved roads, storm water management, wastewater collection, and other utilities.

Since joining the firm, Mr. Crosby has been responsible for the management of projects from the conceptual stages through design and construction. He has worked on projects that were involved with funding agencies such as CDBG, MDOT, FEMA, and NRCS.

During his time at Neel-Schaffer Mr. Crosby has been responsible for the management of both private and publicly funded projects in which he was responsible for developing drawings, cost estimation, and development of contract, bid documents, and technical specifications.

Mr. Crosby has been involved with the design of street and drainage projects, storm water management systems, potable water supply and distribution systems, and wastewater collection. His responsibilities as a project engineer have included project management from conceptual design through final design and project management during construction.

Related Experience

- **Chain Park, City of Hattiesburg Phase I & II –** Created a new park for City of Hattiesburg with grant funding through the MDOT Transportation Enhancement Grant and included the design and construction engineering of roadway, parking areas, pedestrian trail and sidewalks, boardwalk, playground equipment, and drainage improvements. Chain Park includes walking paths, fitness stations, shade pavilions, children's play equipment, parking, vehicular circulation and boardwalk on an ecologically sensitive site due to the existence of wetlands and frontage along the Leaf River.
- **Wiggins Bicycle Trail, City of Wiggins –** Project included the design and construction engineering of the new 3,800 ft. corridor starts at the Flint Creek Water Park, continues through the city of Wiggins, and connects to other existing and proposed recreational destinations. Flint Creek Water Park is a 600 acre lake owned by the Pat Harrison Waterway District, attracting half a million visitors annually. The park features campsites and cabins, as well as a variety of water sports that include boating, skiing and fishing. The project was funded with grant funding through the MDOT Transportation Enhancement Grant.
- **Woodley Sidewalk Project, City of Hattiesburg –** Project included the design and construction engineering of sidewalks and driveways for approximately 3,900 ft. along 21st Ave. from Camp St. to Mamie St. and along Mamie St. from 21st Ave. to 15th Ave. providing safe and accessible route for pedestrians as a part of Safe Routes to School. The project was funded by CDBG with ARRA.
- **Highway 49 & I-59 Interchange and Highway 49S & Highway 11 Interchange Landscaping Improvements, City of Hattiesburg –** Project consisted of creating landscaping beds including Live Oak, Crape Myrtle and Magnolia trees as well as Lantana, Azalea and Juniper shrubs at the Highway interchange locations. Neel-Schaffer's responsibilities included construction engineering and inspection of landscaping improvements. The project was funded by MDOT.

City of Hattiesburg, MS

200 Forrest St.
P.O. Box 1898
Hattiesburg, MS 39401

Master

File Number: 2012-1308

File ID:	2012-1308	**Type:**	Regular Agenda Item	**Status:**	Agenda Ready
Version:	1	**Reference:**		**In Control:**	City Council
				File Created:	10/29/2012
Brief Title:	Authorize Mayor to execute Supplemental Agreement No. 1 with Precision Construction for the Pedestrian Connections Phase IV and VI project.			**Final Action:**	11/05/2012
				Minute Book Number:	MB2012-1/382

Title:

Authorize Mayor to execute quadruple originals of Supplemental Agreement No. 1 with Precision Construction, LLC. for the Pedestrian Connection Phases IV and VI project to extend the project limits South from Concart Street to Mamie Street as per the approved project plans in Additive Alternate #1 and Additive Alternate #2.

Notes: 072201.7225.03

Sponsors:		**Enactment Date:**	
Attachments:	Supplemental Agreement No. 1, executed Supplemental Agreement No. 1(4), Supplemental Agreement No. 1-drw 1, Supplemental Agreement No. 1-drw 2, Supplemental Agreement No. 1-drw 3	**Enactment Number:**	
Contact:		**Meeting Date:**	11/05/2012
Drafter:	Sharon Waits	**Effective Date:**	

History of Legislative File

Version:	Acting Body:	Date:	Action:	Sent To:	Due Date:	Return Date:	Result:
1	City Council	11/06/2012	Authorize				Pass

Action Text: A MOTION was made by Council Member Naylor and seconded by Council Vice President Ware to Authorize Mayor to execute quadruple originals of Supplemental Agreement No. 1 with Precision Construction, LLC. for the Pedestrian Connection Phases IV and VI project to extend the project limits South from Concart Street to Mamie Street as per the approved project plans in Additive Alternate #1 and Additive Alternate #2.

There being no discussion, the Motion received the affirmative vote of the Council as follows:

Yeas: 5 - Bradley, Delgado, Carroll, Ware and Naylor

Nays: 0:

Yea:	5	President Bradley Council Member Delgado Council Member Carroll Vice President Ware Council Member Naylor
TEL-No Vote:	0	

Text of Legislative File 2012-1308

Title

Authorize Mayor to execute quadruple originals of Supplemental Agreement No. 1 with Precision Construction, LLC. for the Pedestrian Connection Phases IV and VI project to extend the project limits South from Concart Street to Mamie Street as per the approved project plans in Additive Alternate #1 and Additive Alternate #2.

Summary

Authorize Mayor to execute Supplemental Agreement No. 1 with Precision Construction, LLC. for the Pedestrian Connection Phases IV and VI project to extend the project limits South from Concart Street to Mamie Street as per the approved project plans in Additive Alternate #1 and Additive Alternate #2.

Budget Information

072201.7225.03

Supplemental Agreement	$91,000.00
Project Under-Run	- $72,397.20
Net increase of	$18,602.80

Expenditure Type

Purchasing Item

Publication Information

THE CITY OF HATTIESBURG
Pedestrian Connections Phases IV & VI

SUPPLEMENTAL AGREEMENT NO. 1

FORREST COUNTY, MISSISSIPPI

WHEREAS: We, **Precision Construction, LLC.**, Contractor and **The Ohio Casualty Insurance Company,** Surety entered into a contract with the **The City of Hattiesburg** on the 16th day of August, 2011 for the Pedestrian Connections Phases IV & VI.

WHEREAS: The City of Hattiesburg desires to extend the project limits South from Concart Street to Mamie Street as per the approved project plans shown in Additive Alternate #1 and Additive Alternate #2.

WHEREAS: The City of Hattiesburg will cause to have power poles relocated in a timely manner to avoid delays in construction. Any poles not relocated by the City of Hattiesburg will be avoided per the detail on page 44 of the plans.

WHEREAS: Grassing will be installed per page 88 of the plans in lieu of solid sod.

WHEREAS: The extra work per this agreement warrants a time extension of 90 calendar days from the approval and execution of the City of Hattiesburg.

WHEREAS: The work shown in the plans shall be completed for a lump sum unit price of $91,000.00.

WHEREAS: The quantities shown in the awarded bid schedule shall be modified as reflected in the attached over-run/under-run statement.

Original Contract Price =	**$881,097.90**
Revised per Supplemental Agreement #1 =	**$91,000.00**
Project Under-Run =	**($72,397.20)**
Revised Contract Amount =	**$899,700.70**

This agreement in no way modifies or changes the original contract of which it becomes a part, except as specifically stated herein.

NOW, THEREFORE, We, **Precision Construction, LLC.,** Contractor and **The Ohio Casualty Insurance Company,** hereby agree that said Supplemental Agreement is hereby made a part of the Original Contract to be performed under the specifications thereof, and that the Original Contract is in full force and effect, except insofar as it might be modified by this Supplement Agreement.

DATED, this _____ day of _____, 2012

Precision Construction, LLC.

By: _____
Contractor

Witness: Shannon McFarland

The City of Hattiesburg, Mississippi

By: _____
Johnny L. DuPree, Ph.D, Mayor

Witness: _____

The Ohio Casualty Insurance Company

By: Kimberly B. Barnum
Surety
Kimberly B. Barnum, Attorney-In-Fact

Witness: _____

THIS POWER OF ATTORNEY IS NOT VALID UNLESS IT IS PRINTED ON RED BACKGROUND.

4906167

This Power of Attorney limits the acts of those named herein, and they have no authority to bind the Company except in the manner and to the extent herein stated.

THE OHIO CASUALTY INSURANCE COMPANY
FAIRFIELD, OHIO
POWER OF ATTORNEY

KNOW ALL PERSONS BY THESE PRESENTS: That The Ohio Casualty Insurance Company (the "Company"), an Ohio corporation, pursuant to and by authority of the By-law and Authorization hereinafter set forth, does hereby name, constitute and appoint **JOHN PITTMAN SR, CHRISTOPHER H. BOONE, JIM E. BRASHIER, DAVID FORTENBERRY, R. T. JONES, SCOTT NAUGLE, MARY J. NORVAL, JOHN B. SNEED, L. W. TISDALE, SHARON TUTEN, TROY P. WAGENER, CHARLES R. FROST JR, LOREN R. HOWELL JR, KIMBERLY B. BARHUM, NORMA J. MCMAHON, KATHLEEN B. SCARBOROUGH, PAUL A. SALA, JR, ALL OF THE CITY OF GULFPORT, STATE OF MISSISSIPPI** .....

, each individually if there be more than one named, its true and lawful attorney-in-fact to make, execute, seal, acknowledge and deliver, for and on its behalf as surety and as its act and deed, any and all undertakings, bonds, recognizances and other surety obligations in the penal sum not exceeding **SIX MILLION AND 00/100**********DOLLARS ($ 6,000,000.00**********) each, and the execution of such undertakings, bonds, recognizances and other surety obligations, in pursuance of these presents, shall be as binding upon the Company as if they had been duly signed by the President and attested by the Secretary of the Company in their own proper persons.

That this power is made and executed pursuant to and by authority of the following By-law and Authorization:

ARTICLE IV - Officers: Section 12. Power of Attorney.

Any officer or other official of the Corporation authorized for that purpose in writing by the Chairman or the President, and subject to such limitation as the Chairman or President may prescribe, shall appoint such attorneys-in-fact, as may be necessary to act in behalf of the Corporation to make, execute, seal, acknowledge and deliver as surety any and all undertakings, bond, recognizances and other surety obligations. Such attorneys-in-fact, subject to the limitations set forth in their respective powers of attorney, shall have full power to bind the Corporation by their signature and execution of any such instruments and to attach thereto the seal of the Corporation. When so executed, such instruments shall be as binding as if signed by the President and attested to by the Secretary.

Any power or authority granted to any representative or attorney-in-fact under the provisions of this article may be revoked at any time by the Board, the Chairman, the President or by the officer or officers granting such power or authority.

By the following instrument the Chairman or the President has authorized the officer or other official named therein to appoint attorneys-in-fact:

Pursuant to Article IV, Section 12 of the By-laws, David M. Carey, Assistant Secretary of The Ohio Casualty Insurance Company, is hereby authorized to appoint such attorneys-in-fact as may be necessary to act in behalf of the Company to make, execute, seal, acknowledge and deliver as surety any and all undertakings, bonds, recognizances and other surety obligations.

That the By-law and the Authorization set forth above are true copies thereof and are now in full force and effect.

IN WITNESS WHEREOF, this Power of Attorney has been subscribed by an authorized officer or official of the Company and the corporate seal of The Ohio Casualty Insurance Company has been affixed thereto in Plymouth Meeting, Pennsylvania, this 5th day of October, 2011.

THE OHIO CASUALTY INSURANCE COMPANY

By David M. Carey
David M. Carey, Assistant Secretary

COMMONWEALTH OF PENNSYLVANIA SS
COUNTY OF MONTGOMERY

On this 5th day of October, 2011, before me, a Notary Public, personally came David M. Carey, to me known, and acknowledged that he is an Assistant Secretary of The Ohio Casualty Insurance Company; that he knows the seal of said corporation; and that he executed the above Power of Attorney and affixed the corporate seal of The Ohio Casualty Insurance Company thereto with the authority and at the direction of said corporation.

IN TESTIMONY WHEREOF, I have hereunto subscribed my name and affixed my notarial seal at Plymouth Meeting, Pennsylvania, on the day and year first above written.

Notarial Seal
Teresa Pastella, Notary Public
Plymouth Twp., Montgomery County
My Commission Expires Mar. 28, 2013
Member, Pennsylvania Association of Notaries

By Teresa Pastella
Teresa Pastella, Notary Public

CERTIFICATE

I, the undersigned, Assistant Secretary of The Ohio Casualty Insurance Company, do hereby certify that the original power of attorney of which the foregoing is a full, true and correct copy, is in full force and effect on the date of this certificate; and I do further certify that the officer or official who executed the said power of attorney is an Assistant Secretary specially authorized by the chairman or the president to appoint attorneys-in-fact as provided in Article IV, Section 12 of the By-Laws of The Ohio Casualty Insurance Company.

This certificate and the above power of attorney may be signed by facsimile or mechanically reproduced signatures under and by authority of the following vote of the board of directors of The Ohio Casualty Insurance Company at a meeting duly called and held on the 15th day of February, 2011:

VOTED that the facsimile or mechanically reproduced signature of any assistant secretary of the company, wherever appearing upon a certified copy of any power of attorney issued by the company in connection with surety bonds, shall be valid and binding upon the company with the same force and effect as though manually affixed.

IN TESTIMONY WHEREOF, I have hereunto subscribed my name and affixed the corporate seal of the said company, this 26th day of October, 2012.

Gregory W. Davenport, Assistant Secretary

Not valid for mortgage, note, loan, letter of credit, bank deposit, currency rate, interest rate or residual value guarantees.

To confirm the validity of this Power of Attorney call 1-610-832-8240 between 9:00 am and 4:30 pm EST on any business day.

SHOWS, DEARMAN & WAITS, INC. - CONSULTING ENGINEERS - **Date: 10-15-2012**

Project: Pedestrian Connections Phases IV & VI
City of Hattiesburg

Contractor: Precision Construction, LLC
15 Chanticleer Dr, Hattiesburg, MS 39402

Overrun/Underrun Statement

Base Bid Phase IV

Item No.	Item Description	Original Quantity	Final Quantity	Unit	Overrun	Underrun	Unit Price	Increase	Decrease
201-A	Clearing and Grubbing	1	1.00	Lump Sum			$2,500.00	$ -	$ -
202-B	Removal of Pavement (All Types & Depths)	152	166.40	S.Y.	14.4		$5.00	$ 72.00	$ -
203-A	Unclassified Excavation, FM, AH	570	570.00	C.Y.			$5.00	$ -	$ -
203-EX	Borrow Excavation, LVM, AH, Class B9	140	140.00	C.Y.			$13.00	$ -	$ -
203-G	Excess Excavation, LVM, AH	20	58.00	C.Y.	38		$5.00	$ 190.00	$ -
211-B	Top Soil for Slope Treatment (Contractor Furnished)	400	428.00	C.Y.	28		$18.00	$ 504.00	$ -
213-C	Super Phosphate	0.5	0.00	Ton		0.5	$1,000.00	$ -	$ 500.00
215-A	Vegetative Materials for Mulch	2.0	0.00	Ton		2	$250.00	$ -	$ 500.00
216-A	Solid Sodding	1000	965.00	S.Y.		35	$4.00	$ -	$ 140.00
220-A	Insect Pest Control	1.0	0.00	Acre		1	$1,500.00	$ -	$ 1,500.00
223-A	Mowing	0.5	0.00	Acre		0.5	$1,500.00	$ -	$ 750.00
907-225-A	Grassing	0.5	0.00	Acre		0.50	$3,000.00	$ -	$ 1,500.00
907-225-B	Agricultural Limestone	3.0	0.00	Ton		3	$300.00	$ -	$ 900.00
907-226-A	Temporary Grassing	0.8	0.80	Acre			$1,500.00	$ -	$ -
234-A	Temporary Silt Fence	2776	2800.00	L.F.	24		$3.00	$ 72.00	$ -
907-234-D	Inlet Siltation Guard	6	0.00	Each		6.00	$200.00	$ -	$ 1,200.00
907-237-A	Wattles, 20"	32	0.00	L.F.		32.00	$6.00	$ -	$ 192.00
907-304-A	Granular Material (LVM) (Class 9, Group E)	200	0.00	C.Y.		200.00	$13.00	$ -	$ 2,600.00
907-304-H	Size 610 Crushed Stone Base, LVM	608	540.22	C.Y.		67.7835	$56.00	$ -	$ 3,795.88
907-403-A	Hot Mix Asphalt (MT) (9.5mm Mixture)	133	134.57	Ton	1.57		$135.00	$ 211.95	$ -
907-403-A	Hot Mix Asphalt (MT) (19.0mm Mixture)	7	0.00	Ton		7	$135.00	$ -	$ 945.00
907-601-B	Class "B" Structural Concrete - Minor Structures	1	0.50	C.Y.		0.5	$1,200.00	$ -	$ 600.00
603-CB	24" Reinforced Concrete End Section	1	1.00	Each			$1,200.00	$ -	$ -
608-A	Concrete Sidewalk, Without Reinforcement (4" Thickness)	409	500.53	S.Y.	91.53		$36.00	$ 3,295.08	$ -
609-D	Combination Concrete Curb and Gutter (All Types)	57	83.00	L.F.	26		$17.00	$ 442.00	$ -
614-A	Concrete Driveway, Without Reinforcement (6" Thickness)	22	48.80	S.Y.	26.8		$52.00	$ 1,393.60	$ -
613-D	Adjustment of Utility Appurtenance	2	0.00	Each		2	$500.00	$ -	$ 1,000.00
618-A	Maintenance of Traffic	1	0.75	Lump Sum		0.25	$6,500.00	$ -	$ 1,625.00
619-D	Standard Roadside Construction Signs, 10 Square Feet or More	140	128.00	S.F.		12	$12.00	$ -	$ 144.00
619-D	Standard Roadside Construction Signs, Less Than 10 Square Feet	162	135.00	S.F.		27	$12.00	$ -	$ 324.00
619-G	Barricades, Type III Double Faced	96	96.00	L.F.			$20.00	$ -	$ -
620-A	Mobilization	1	1.00	Lump Sum			$8,500.00	$ -	$ -

Base Bid Phase VI

Item No.	Item Description	Original Quantity	Final Quantity	Unit	Overrun	Underrun	Unit Price	Increase	Decrease
201-A	Clearing and Grubbing	1	1.00	Lump Sum			$1,500.00	$ -	$ -
202-B	Removal of Pavement (All Types & Depths)	433	1012.30	S.Y.	579.3		$5.00	$ 2,896.50	$ -
202-B	Removal of Concrete Curb	467	666.00	L.F.	199		$5.00	$ 995.00	$ -
202-B	Removal of Trees (All Sizes and Types)	3	3.00	Each			$800.00	$ -	$ -
202-B	Removal of Pipe (All Types & Sizes)	87	40.00	L.F.		47.00	$10.00	$ -	$ 470.00
202-B	Removal of Paved Concrete Flume	6	6.00	L.F.			$50.00	$ -	$ -
202-B	Removal of Dumspter Enclosure	1	1.00	Lump Sum			$400.00	$ -	$ -
202-B	Removal of Fence (All Types and Sizes)	32	32.00	L.F.			$10.00	$ -	$ -
203-A	Unclassified Excavation, FM, AH	373	373.00	C.Y.			$5.00	$ -	$ -
203-EX	Borrow Excavation, LVM, AH, Class B9	197	166.00	C.Y.		31	$13.00	$ -	$ 403.00
203-G	Excess Excavation, LVM, AH	30	1107.00	C.Y.	1077		$5.00	$ 5,385.00	$ -
211-B	Top Soil for Slope Treatment (Contractor Furnished)	800	620.00	C.Y.		180.00	$18.00	$ -	$ 3,240.00
213-C	Super Phosphate	0.5	0.00	Ton		0.5	$1,000.00	$ -	$ 500.00
215-A	Vegetative Materials for Mulch	2.0	0.00	Ton		2.00	$250.00	$ -	$ 500.00
216-A	Solid Sodding	4800	4627.00	S.Y.		173	$4.00	$ -	$ 692.00
220-A	Insect Pest Control	1.0	0.00	Acre		1.00	$1,500.00	$ -	$ 1,500.00
221-A	Portland Cement Concrete Paved Ditch	1.0	1.00	C.Y.			$400.00	$ -	$ -
223-A	Mowing	1.5	0.00	Acre		1.50	$1,500.00	$ -	$ 2,250.00
907-225-A	Grassing	0.3	0.00	Acre		0.3	$3,000.00	$ -	$ 900.00
907-225-B	Agricultural Limestone	3.0	0.00	Ton		3	$300.00	$ -	$ 900.00
907-226-A	Temporary Grassing	1.0	1.00	Acre			$1,500.00	$ -	$ -
234-A	Temporary Silt Fence	2365	800.00	L.F.		1565	$3.00	$ -	$ 4,695.00
907-237-A	Wattles, 20"	210	0.00	L.F.		210.00	$6.00	$ -	$ 1,260.00
907-242-PP1	Installation of 20 Foot Long Wood Foot Bridge	1	1.00	Lump Sum			$52,000.00	$ -	$ -
907-242-PP2	Installation of 30 Foot Long Wood Foot Bridge	1	1.00	Lump Sum			$67,000.00	$ -	$ -
907-242-PP3	Installation of Wood Ramp	1	1.00	Lump Sum			$6,000.00	$ -	$ -
907-242-PP4	Installation of 150 Foot Single Span Truss Foot Bridge (Contractor Design)	1	1.00	Lump Sum			$235,000.00	$ -	$ -
907-258-K	Bollard	2	0.00	Each		2.00	$900.00	$ -	$ 1,800.00
907-258-PP2	48" Tall Metal Handrail	137	169.00	L.F.	32		$50.00	$ 1,600.00	$ -
907-290-PP	Relocation of Flag Pole	5	0.00	Each		5	$500.00	$ -	$ 2,500.00
907-304-A	Granular Material (LVM) (Class 9, Group E)	104	24.00	C.Y.		80.00	$13.00	$ -	$ 1,040.00
907-304-H	Size 610 Crushed Stone Base, LVM	169	0.00	C.Y.		169.00	$56.00	$ -	$ 9,464.00
907-403-A	Hot Mix Asphalt (MT) (9.5mm Mixture)	19	16.00	Ton		3.00	$135.00	$ -	$ 405.00
907-403-A	Hot Mix Asphalt (MT) (19.0mm Mixture)	58	55.60	Ton		2.4	$135.00	$ -	$ 324.00
501-B	8" Plain Cement Concrete Pavement, Drag Finish	4	4.00	S.Y.			$56.00	$ -	$ -
503-A	8" Reinforced Concrete Pavement, Drag Finish	9	0.00	S.Y.		9	$65.00	$ -	$ 585.00
907-601-B	Class "B" Structural Concrete - Minor Structures	2	1.44	C.Y.		0.56	$900.00	$ -	$ 504.00
602-A	Reinforcing Steel	79	0.00	LBS		79.00	$3.00	$ -	$ 237.00
603-CE	22"x13" Concrete Arch Pipe, Class A III, Flexible Plastic Gasket	8	16.00	L.F.	8		$75.00	$ 600.00	$ -
603-CF	22"x13" Concrete Arch Pipe End Section	1	1.00	Each			$980.00	$ -	$ -

907-603-PE	18" Corrugated Polyethylene Pipe with Bedding Material	78	40.00	L.F.		38	$18.00	$ -	$ 684.00
604-A	Castings	1040	1152.00	LBS	112.00		$4.00	$ 448.00	$ -
604-B	Gratings	1200	380.00	LBS		820	$4.00	$ -	$ 3,280.00
607-B	96" Chain Link Fence, Class I	32	21.00	L.F.		11	$43.00	$ -	$ 473.00
607-PP	60" Wood Fence with Galvanized Steel Posts	24	24.00	L.F.			$40.00	$ -	$ -
607-PP	60"x108" Double Wood Gate	1	1.00	Each			$500.00	$ -	$ -
608-A	Concrete Sidewalk, Without Reinforcement (4" Thickness)	2852	2799.00	S.Y.		53.00	$36.00	$ -	$ 1,908.00
609-D	Combination Concrete Curb and Gutter (All Types)	469	549.70	L.F.	80.7		$17.00	$ 1,371.90	$ -
614-A	Concrete Driveway, Without Reinforcement (6" Thickness)	1043	410.81	S.Y.		632.19	$46.00	$ -	$ 29,080.74
614-A	Concrete Driveway, Without Reinforcement (8" Thickness)	17	86.89	S.Y.	69.8928		$56.00	$ 3,914.00	$ -
613-D	Adjustment of Fire Hydrant	2	0.00	Each		2	$800.00	$ -	$ 1,600.00
613-D	Adjustment of Utility Appurtenance	2	0.00	Each		2	$500.00	$ -	$ 1,000.00
613-D	Adjustment of Inlet	5	2.00	Each		3	$1,200.00	$ -	$ 3,600.00
618-A	Maintenance of Traffic	1	0.75	Lump Sum		0.25	$6,000.00	$ -	$ 1,500.00
619-D	Standard Roadside Construction Signs, 10 Square Feet or More	80	80.00	S.F.			$12.00	$ -	$ -
619-D	Standard Roadside Construction Signs, Less Than 10 Square Feet	162	81.00	S.F.		81	$12.00	$ -	$ 972.00
619-G	Barricades, Type III Double Faced	48	48.00	L.F.			$20.00	$ -	$ -
620-A	Mobilization	1	1.00	Lump Sum			$8,500.00	$ -	$ -
907-626-G	4" Thermoplastic Detail Stripe, White	4420	3949.00	L.F.		471	$0.88	$ -	$ 414.48
907-626-H	Thermoplastic Legend White	100	171.10	S.F.	71.1		$4.50	$ 319.95	$ -
630-A	Standard Roadside Signs, Sheet Aluminum, 0.080" Thickness	166	182.00	S.F.	16		$25.00	$ 400.00	$ -
630-C	Steel U-Section Posts, 2.0 Lbs/Ft	602	260.00	L.F.		342	$3.00	$ -	$ 1,026.00
907-630-O	Remove and Reset Signs (All Sizes)	5	5.00	Each			$200.00	$ -	$ -
907-639-A	Traffic Signal Equipment Pole, Type VI, 8' Shaft	1	1.00	Each			$1,500.00	$ -	$ -
907-639-C	Pole Foundations, 24" Diameter	1	1.00	Each			$650.00	$ -	$ -
640-A	Traffic Signal Heads, Type 6 LED	2	2.00	Each			$1,600.00	$ -	$ -
907-642-A	Solid State Traffic Actuated Controller Modification	1	1.00	L.S.			$350.00	$ -	$ -
647-A	Pullbox, Type 2	1	1.00	Each			$350.00	$ -	$ -
666-B	Electrical Cable, Underground in Conduit	250	250.00	L.F.			$3.00	$ -	$ -
668-A	Traffic Signal Conduit, Type IV Underground, Roll Pipe 2"	40	40.00	L.F.			$5.00	$ -	$ -
699-A	Roadway Construction Stakes	1	1.00	Lump Sum			$2,500.00	$ -	$ -
							subtotals	**$17,930.35**	**$79,707.22**

Alternate No. 1

Item No.	Item Description	Original Quantity	Final Quantity	Unit	Overrun	Underrun	Unit Price	Increase	Decrease
201-A	Clearing and Grubbing	1	1.00	Lump Sum			$1,500.00	$ -	$ -
202-B	Removal of Pavement (All Types & Depths)	42	42.00	S.Y.			$13.00	$ -	$ -
202-B	Removal of Pipe (All Types & Sizes)	24	0.00	L.F.		24.00	$10.00	$ -	$ 240.00
203-A	Unclassified Excavation, FM, AH	4	4.00	C.Y.			$5.00	$ -	$ -
203-EX	Borrow Excavation, LVM, AH, Class B9	16	16.00	C.Y.			$13.00	$ -	$ -
203-G	Excess Excavation, LVM, AH	6	6.00	C.Y.			$5.00	$ -	$ -
211-B	Top Soil for Slope Treatment (Contractor Furnished)	4	4.00	C.Y.			$18.00	$ -	$ -
216-A	Solid Sodding	28	7.00	S.Y.		21	$4.00	$ -	$ 84.00
234-A	Temporary Silt Fence	60	100.00	L.F.	40		$3.00	$ 120.00	$ -
907-237-A	Wattles, 20"	70	0.00	L.F.		70	$6.00	$ -	$ 420.00
907-258-K	Bollard	1	0.00	Each		1.00	$900.00	$ -	$ 900.00
907-304-H	Size 610 Crushed Stone Base, LVM	14	0.00	C.Y.		14	$56.00	$ -	$ 784.00
501-B	5" Plain Cement Concrete Pavement, Drag Finish	23	0.00	S.Y.		23.00	$50.00	$ -	$ 1,150.00
501-B	8" Plain Cement Concrete Pavement, Drag Finish	19	0.00	S.Y.		19	$56.00	$ -	$ 1,064.00
907-601-B	Class "B" Structural Concrete - Minor Structures	0.4	0.00	C.Y.		0.40	$1,200.00	$ -	$ 480.00
603-CA	18" Reinforced Concrete Pipe, Class III, Rubber Type Gaskets	12	16.00	L.F.	4		$45.00	$ 180.00	$ -
603-CB	18" Reinforced Concrete End Section	1	1.00	Each			$950.00	$ -	$ -
604-B	Gratings	600	568.00	LBS		32	$4.00	$ -	$ 128.00
608-A	Concrete Sidewalk, Without Reinforcement (4" Thickness)	90	90.00	S.Y.			$36.00	$ -	$ -
613-D	Adjustment of Utility Appurtenance	1	0.00	Each		1	$500.00	$ -	$ 500.00
613-D	Adjustment of Inlet	1	1.00	Each			$1,200.00	$ -	$ -
620-A	Mobilization	1	1.00	Lump Sum			$1,500.00	$ -	$ -
907-626-B	4" Thermoplastic Stripe, Continuous White	300	313.00	L.F.	13		$0.48	$ 6.24	$ -
907-626-D	4" Thermoplastic Stripe, Continuous Yellow	600	620.00	L.F.	20		$0.48	$ 9.60	$ -
907-626-G	4" Thermoplastic Detail Stripe, White	78	0.00	L.F.		78.00	$0.88	$ -	$ 68.64
907-626-H	Thermoplastic Legend White (4" Equivalent Length)	48	0.00	L.F.		48	$4.50	$ -	$ 216.00
628-B	4" Cold Plastic Traffic Stripe, Continuous White	300	313.00	L.F.	13		$0.48	$ 6.24	$ -
628-G	4" Cold Plastic Detail Stripe, White	243	528.00	L.F.	285		$0.88	$ 250.80	$ -
628-H	Cold Plastic Legend White (4" Equivalent Length)	32	88.00	L.F.	56.00		$3.50	$ 196.00	$ -
628-H	Cold Plastic Legend White	192	149.40	S.F.		42.60	$5.50	$ -	$ 234.30

630-A	Standard Roadside Signs, Sheet Aluminum, 0.080" Thickness	19	14.25	S.F.		4.75	$7.00	$ -	$ 33.25
630-C	Steel U-Section Posts, 2.0 Lbs/Ft	56	60.00	L.F.	4		$2.00	$ 8.00	$ -
699-A	Roadway Construction Stakes	1	1.00	Lump Sum			$1,500.00		
							subtotals	**$776.88**	**$6,302.19**
							TOTAL	**$38,254.13**	**$110,651.33**

Phase IV, VI and Alt. No. 1 Original Contract Amount	$881,097.90
Project Decreases	$72,397.20
Total Amount Paid	**$808,700.70**

THE CITY OF HATTIESBURG
Pedestrian Connections Phases IV & VI

SUPPLEMENTAL AGREEMENT NO. 1

FORREST COUNTY, MISSISSIPPI

WHEREAS: We, **Precision Construction, LLC.**, Contractor and **The Ohio Casualty Insurance Company,** Surety entered into a contract with the **The City of Hattiesburg** on the 16th day of August, 2011 for the Pedestrian Connections Phases IV & VI.

WHEREAS: The City of Hattiesburg desires to extend the project limits South from Concart Street to Mamie Street as per the approved project plans shown in Additive Alternate #1 and Additive Alternate #2.

WHEREAS: The City of Hattiesburg will cause to have power poles relocated in a timely manner to avoid delays in construction. Any poles not relocated by the City of Hattiesburg will be avoided per the detail on page 44 of the plans.

WHEREAS: Grassing will be installed per page 88 of the plans in lieu of solid sod.

WHEREAS: The extra work per this agreement warrants a time extension of 90 calendar days from the approval and execution of the City of Hattiesburg.

WHEREAS: The work shown in the plans shall be completed for a lump sum unit price of $91,000.00.

WHEREAS: The quantities shown in the awarded bid schedule shall be modified as reflected in the attached over-run/under-run statement.

Original Contract Price =	**$881,097.90**
Revised per Supplemental Agreement #1 =	**$91,000.00**
Project Under-Run =	**($72,397.20)**
Revised Contract Amount =	**$899,700.70**

This agreement in no way modifies or changes the original contract of which it becomes a part, except as specifically stated herein.

NOW, THEREFORE, We, **Precision Construction, LLC.,** Contractor and **The Ohio Casualty Insurance Company,** hereby agree that said Supplemental Agreement is hereby made a part of the Original Contract to be performed under the specifications thereof, and that the Original Contract is in full force and effect, except insofar as it might be modified by this Supplement Agreement.

DATED, this 6th day of November, 2012

Precision Construction, LLC.

By: _____
Contractor

Witness: Shanna McFarland

The City of Hattiesburg, Mississippi

By: _____
Johnny L. DuPree, Ph.D, Mayor

Witness: _____

The Ohio Casualty Insurance Company

By: Kimberly B. Barhum
Surety
Kimberly B. Barhum, Attorney-In-Fact

Witness: _____

THIS POWER OF ATTORNEY IS NOT VALID UNLESS IT IS PRINTED ON RED BACKGROUND.

4906167

This Power of Attorney limits the acts of those named herein, and they have no authority to bind the Company except in the manner and to the extent herein stated.

THE OHIO CASUALTY INSURANCE COMPANY
FAIRFIELD, OHIO
POWER OF ATTORNEY

KNOW ALL PERSONS BY THESE PRESENTS: That The Ohio Casualty Insurance Company (the "Company"), an Ohio corporation, pursuant to and by authority of the By-law and Authorization hereinafter set forth, does hereby name, constitute and appoint **JOHN PITTMAN SR, CHRISTOPHER H. BOONE, JIM E. BRASHIER, DAVID FORTENBERRY, R. T. JONES, SCOTT NAUGLE, MARY J. NORVAL, JOHN B. SNEED, L. W. TISDALE, SHARON TUTEN, TROY P. WAGENER, CHARLES R. FROST JR, LOREN R. HOWELL JR, KIMBERLY B. BARHUM, NORMA J. MCMAHON, KATHLEEN B. SCARBOROUGH, PAUL A. SALA, JR, ALL OF THE CITY OF GULFPORT, STATE OF MISSISSIPPI** .....

, each individually if there be more than one named, its true and lawful attorney-in-fact to make, execute, seal, acknowledge and deliver, for and on its behalf as surety and as its act and deed, any and all undertakings, bonds, recognizances and other surety obligations in the penal sum not exceeding **SIX MILLION AND 00/100**********_____ **DOLLARS** ($ **6,000,000.00**********) each, and the execution of such undertakings, bonds, recognizances and other surety obligations, in pursuance of these presents, shall be as binding upon the Company as if they had been duly signed by the President and attested by the Secretary of the Company in their own proper persons.

That this power is made and executed pursuant to and by authority of the following By-law and Authorization:

ARTICLE IV - Officers: Section 12. Power of Attorney.
Any officer or other official of the Corporation authorized for that purpose in writing by the Chairman or the President, and subject to such limitation as the Chairman or President may prescribe, shall appoint such attorneys-in-fact, as may be necessary to act in behalf of the Corporation to make, execute, seal, acknowledge and deliver as surety any and all undertakings, bond, recognizances and other surety obligations. Such attorneys-in-fact, subject to the limitations set forth in their respective powers of attorney, shall have full power to bind the Corporation by their signature and execution of any such instruments and to attach thereto the seal of the Corporation. When so executed, such instruments shall be as binding as if signed by the President and attested to by the Secretary.

Any power or authority granted to any representative or attorney-in-fact under the provisions of this article may be revoked at any time by the Board, the Chairman, the President or by the officer or officers granting such power or authority.

By the following instrument the Chairman or the President has authorized the officer or other official named therein to appoint attorneys-in-fact:
Pursuant to Article IV, Section 12 of the By-laws, David M. Carey, Assistant Secretary of The Ohio Casualty Insurance Company, is hereby authorized to appoint such attorneys-in-fact as may be necessary to act in behalf of the Company to make, execute, seal, acknowledge and deliver as surety any and all undertakings, bonds, recognizances and other surety obligations.

That the By-law and the Authorization set forth above are true copies thereof and are now in full force and effect.

IN WITNESS WHEREOF, this Power of Attorney has been subscribed by an authorized officer or official of the Company and the corporate seal of The Ohio Casualty Insurance Company has been affixed thereto in Plymouth Meeting, Pennsylvania, this 5th day of October, 2011.

THE OHIO CASUALTY INSURANCE COMPANY CORPORATE SEAL OHIO

THE OHIO CASUALTY INSURANCE COMPANY

By _____
David M. Carey, Assistant Secretary

COMMONWEALTH OF PENNSYLVANIA SS
COUNTY OF MONTGOMERY

On this 5th day of October, 2011, before me, a Notary Public, personally came David M. Carey, to me known, and acknowledged that he is an Assistant Secretary of The Ohio Casualty Insurance Company; that he knows the seal of said corporation; and that he executed the above Power of Attorney and affixed the corporate seal of The Ohio Casualty Insurance Company thereto with the authority and at the direction of said corporation.

IN TESTIMONY WHEREOF, I have hereunto subscribed my name and affixed my notarial seal at Plymouth Meeting, Pennsylvania, on the day and year first above written.

TERESA PASTELLA COMMONWEALTH OF PENNSYLVANIA NOTARY PUBLIC

Notarial Seal
Teresa Pastella, Notary Public
Plymouth Twp., Montgomery County
My Commission Expires Mar. 28, 2013
Member, Pennsylvania Association of Notaries

By _____
Teresa Pastella, Notary Public

CERTIFICATE

I, the undersigned, Assistant Secretary of The Ohio Casualty Insurance Company, do hereby certify that the original power of attorney of which the foregoing is a full, true and correct copy, is in full force and effect on the date of this certificate; and I do further certify that the officer or official who executed the said power of attorney is an Assistant Secretary specially authorized by the chairman or the president to appoint attorneys-in-fact as provided in Article IV, Section 12 of the By-Laws of The Ohio Casualty Insurance Company.

This certificate and the above power of attorney may be signed by facsimile or mechanically reproduced signatures under and by authority of the following vote of the board of directors of The Ohio Casualty Insurance Company at a meeting duly called and held on the 15th day of February, 2011:

VOTED that the facsimile or mechanically reproduced signature of any assistant secretary of the company, wherever appearing upon a certified copy of any power of attorney issued by the company in connection with surety bonds, shall be valid and binding upon the company with the same force and effect as though manually affixed.

IN TESTIMONY WHEREOF, I have hereunto subscribed my name and affixed the corporate seal of the said company, this 26th day of October, 2012.

THE OHIO CASUALTY INSURANCE COMPANY CORPORATE SEAL OHIO

_____
Gregory W. Davenport, Assistant Secretary

Not valid for mortgage, note, loan, letter of credit, bank deposit, currency rate, interest rate or residual value guarantees.

To confirm the validity of this Power of Attorney call 1-610-832-8240 between 9:00 am and 4:30 pm EST on any business day.

SHOWS, DEARMAN & WAITS, INC. - CONSULTING ENGINEERS - **Date: 10-15-2012**

Project: Pedestrian Connections Phases IV & VI
City of Hattiesburg

Contractor: Precision Construction, LLC
15 Chanticleer Dr, Hattiesburg, MS 39402

Overrun/Underrun Statement

Base Bid Phase IV

Item No.	Item Description	Original Quantity	Final Quantity	Unit	Overrun	Underrun	Unit Price	Increase	Decrease
201-A	Clearing and Grubbing	1	1.00	Lump Sum			$2,500.00	$ -	$ -
202-B	Removal of Pavement (All Types & Depths)	152	166.40	S.Y.	14.4		$5.00	$ 72.00	$ -
203-A	Unclassified Excavation, FM, AH	570	570.00	C.Y.			$5.00	$ -	$ -
203-EX	Borrow Excavation, LVM, AH, Class B9	140	140.00	C.Y.			$13.00	$ -	$ -
203-G	Excess Excavation, LVM, AH	20	58.00	C.Y.	38		$5.00	$ 190.00	$ -
211-B	Top Soil for Slope Treatment (Contractor Furnished)	400	428.00	C.Y.	28		$18.00	$ 504.00	$ -
213-C	Super Phosphate	0.5	0.00	Ton		0.5	$1,000.00	$ -	$ 500.00
215-A	Vegetative Materials for Mulch	2.0	0.00	Ton		2	$250.00	$ -	$ 500.00
216-A	Solid Sodding	1000	965.00	S.Y.		35	$4.00	$ -	$ 140.00
220-A	Insect Pest Control	1.0	0.00	Acre		1	$1,500.00	$ -	$ 1,500.00
223-A	Mowing	0.5	0.00	Acre		0.5	$1,500.00	$ -	$ 750.00
907-225-A	Grassing	0.5	0.00	Acre		0.50	$3,000.00	$ -	$ 1,500.00
907-225-B	Agricultural Limestone	3.0	0.00	Ton		3	$300.00	$ -	$ 900.00
907-226-A	Temporary Grassing	0.8	0.80	Acre			$1,500.00	$ -	$ -
234-A	Temporary Silt Fence	2776	2800.00	L.F.	24		$3.00	$ 72.00	$ -
907-234-D	Inlet Siltation Guard	6	0.00	Each		6.00	$200.00	$ -	$ 1,200.00
907-237-A	Wattles, 20"	32	0.00	L.F.		32.00	$6.00	$ -	$ 192.00
907-304-A	Granular Material (LVM) (Class 9, Group E)	200	0.00	C.Y.		200.00	$13.00	$ -	$ 2,600.00
907-304-H	Size 610 Crushed Stone Base, LVM	608	540.22	C.Y.		67.7835	$56.00	$ -	$ 3,795.88
907-403-A	Hot Mix Asphalt (MT) (9.5mm Mixture)	133	134.57	Ton	1.57		$135.00	$ 211.95	$ -
907-403-A	Hot Mix Asphalt (MT) (19.0mm Mixture)	7	0.00	Ton		7	$135.00	$ -	$ 945.00
907-601-B	Class "B" Structural Concrete - Minor Structures	1	0.50	C.Y.		0.5	$1,200.00	$ -	$ 600.00
603-CB	24" Reinforced Concrete End Section	1	1.00	Each			$1,200.00	$ -	$ -
608-A	Concrete Sidewalk, Without Reinforcement (4" Thickness)	409	500.53	S.Y.	91.53		$36.00	$ 3,295.08	$ -
609-D	Combination Concrete Curb and Gutter (All Types)	57	83.00	L.F.	26		$17.00	$ 442.00	$ -
614-A	Concrete Driveway, Without Reinforcement (6" Thickness)	22	48.80	S.Y.	26.8		$52.00	$ 1,393.60	$ -
613-D	Adjustment of Utility Appurtenance	2	0.00	Each		2	$500.00	$ -	$ 1,000.00
618-A	Maintenance of Traffic	1	0.75	Lump Sum		0.25	$6,500.00	$ -	$ 1,625.00
619-D	Standard Roadside Construction Signs, 10 Square Feet or More	140	128.00	S.F.		12	$12.00	$ -	$ 144.00
619-D	Standard Roadside Construction Signs, Less Than 10 Square Feet	162	135.00	S.F.		27	$12.00	$ -	$ 324.00
619-G	Barricades, Type III Double Faced	96	96.00	L.F.			$20.00	$ -	$ -
620-A	Mobilization	1	1.00	Lump Sum			$8,500.00	$ -	$ -

907-626-B	4" Thermoplastic Stripe, Continuous White	703	670.00	L.F.		33.00	$0.48	$ -	$ 15.84
907-626-D	4" Thermoplastic Stripe, Continuous Yellow	3356	4699.00	L.F.	1343		$0.48	$ 644.64	$ -
907-626-G	4" Thermoplastic Detail Stripe, White	1750	4085.50	L.F.	2335.5		$0.88	$ 2,055.24	$ -
907-626-G	4" Thermoplastic Detail Stripe, Yellow	1200	1468.00	L.F.	268		$0.88	$ 235.84	$ -
907-626-H	Thermoplastic Legend White (4" Equivalent Length)	1733	5261.00	L.F.	3528		$2.50	$ 8,820.00	$ -
907-626-H	Thermoplastic Legend White	1056	1413.90	S.F.	357.9		$4.50	$ 1,610.55	$ -
628-H	Cold Plastic Legend White (4" Equivalent Length)	392	392.00	L.F.			$3.50	$ -	$ -
628-H	Cold Plastic Legend White	14	13.60	S.F.		0.4	$5.50	$ -	$ 2.20
630-H	Treated Timber Post (4x4)	5	4.00	Each		1	$50.00	$ -	$ 50.00
630-A	Standard Roadside Signs, Sheet Aluminum, 0.080" Thickness	255	189.08	S.F.		65.92	$25.00	$ -	$ 1,648.00
630-C	Steel U-Section Posts, 2.0 Lbs/Ft	450	380.00	L.F.		70	$3.00	$ -	$ 210.00
907-630-O	Remove and Reset Signs (All Sizes)	4	4.00	Each			$200.00	$ -	$ -
699-A	Roadway Construction Stakes	1	1.00	Lump Sum			$2,500.00	$ -	$ -
907-899-A1	Railway-Highway Provisions (Norfolk Southern)	1	0.75	Lump Sum		0.25	$18,000.00	$ -	$ 4,500.00
							subtotals	**$19,546.90**	**$24,641.92**

Base Bid Phase VI

Item No.	Item Description	Original Quantity	Final Quantity	Unit	Overrun	Underrun	Unit Price	Increase	Decrease
201-A	Clearing and Grubbing	1	1.00	Lump Sum			$1,500.00	$ -	$ -
202-B	Removal of Pavement (All Types & Depths)	433	1012.30	S.Y.	579.3		$5.00	$ 2,896.50	$ -
202-B	Removal of Concrete Curb	467	666.00	L.F.	199		$5.00	$ 995.00	$ -
202-B	Removal of Trees (All Sizes and Types)	3	3.00	Each			$800.00	$ -	$ -
202-B	Removal of Pipe (All Types & Sizes)	87	40.00	L.F.		47.00	$10.00	$ -	$ 470.00
202-B	Removal of Paved Concrete Flume	6	6.00	L.F.			$50.00	$ -	$ -
202-B	Removal of Dumspter Enclosure	1	1.00	Lump Sum			$400.00	$ -	$ -
202-B	Removal of Fence (All Types and Sizes)	32	32.00	L.F.			$10.00	$ -	$ -
203-A	Unclassified Excavation, FM, AH	373	373.00	C.Y.			$5.00	$ -	$ -
203-EX	Borrow Excavation, LVM, AH, Class B9	197	166.00	C.Y.		31	$13.00	$ -	$ 403.00
203-G	Excess Excavation, LVM, AH	30	1107.00	C.Y.	1077		$5.00	$ 5,385.00	$ -
211-B	Top Soil for Slope Treatment (Contractor Furnished)	800	620.00	C.Y.		180.00	$18.00	$ -	$ 3,240.00
213-C	Super Phosphate	0.5	0.00	Ton		0.5	$1,000.00	$ -	$ 500.00
215-A	Vegetative Materials for Mulch	2.0	0.00	Ton		2.00	$250.00	$ -	$ 500.00
216-A	Solid Sodding	4800	4627.00	S.Y.		173	$4.00	$ -	$ 692.00
220-A	Insect Pest Control	1.0	0.00	Acre		1.00	$1,500.00	$ -	$ 1,500.00
221-A	Portland Cement Concrete Paved Ditch	1.0	1.00	C.Y.			$400.00	$ -	$ -
223-A	Mowing	1.5	0.00	Acre		1.50	$1,500.00	$ -	$ 2,250.00
907-225-A	Grassing	0.3	0.00	Acre		0.3	$3,000.00	$ -	$ 900.00
907-225-B	Agricultural Limestone	3.0	0.00	Ton		3	$300.00	$ -	$ 900.00
907-226-A	Temporary Grassing	1.0	1.00	Acre			$1,500.00	$ -	$ -
234-A	Temporary Silt Fence	2365	800.00	L.F.		1565	$3.00	$ -	$ 4,695.00
907-237-A	Wattles, 20"	210	0.00	L.F.		210.00	$6.00	$ -	$ 1,260.00
907-242-PP1	Installation of 20 Foot Long Wood Foot Bridge	1	1.00	Lump Sum			$52,000.00	$ -	$ -
907-242-PP2	Installation of 30 Foot Long Wood Foot Bridge	1	1.00	Lump Sum			$67,000.00	$ -	$ -
907-242-PP3	Installation of Wood Ramp	1	1.00	Lump Sum			$6,000.00	$ -	$ -
907-242-PP4	Installation of 150 Foot Single Span Truss Foot Bridge (Contractor Design)	1	1.00	Lump Sum			$235,000.00	$ -	$ -
907-258-K	Bollard	2	0.00	Each		2.00	$900.00	$ -	$ 1,800.00
907-258-PP2	48" Tall Metal Handrail	137	169.00	L.F.	32		$50.00	$ 1,600.00	$ -
907-290-PP	Relocation of Flag Pole	5	0.00	Each		5	$500.00	$ -	$ 2,500.00
907-304-A	Granular Material (LVM) (Class 9, Group E)	104	24.00	C.Y.		80.00	$13.00	$ -	$ 1,040.00
907-304-H	Size 610 Crushed Stone Base, LVM	169	0.00	C.Y.		169.00	$56.00	$ -	$ 9,464.00
907-403-A	Hot Mix Asphalt (MT) (9.5mm Mixture)	19	16.00	Ton		3.00	$135.00	$ -	$ 405.00
907-403-A	Hot Mix Asphalt (MT) (19.0mm Mixture)	58	55.60	Ton		2.4	$135.00	$ -	$ 324.00
501-B	8" Plain Cement Concrete Pavement, Drag Finish	4	4.00	S.Y.			$56.00	$ -	$ -
503-A	8" Reinforced Concrete Pavement, Drag Finish	9	0.00	S.Y.		9	$65.00	$ -	$ 585.00
907-601-B	Class "B" Structural Concrete - Minor Structures	2	1.44	C.Y.		0.56	$900.00	$ -	$ 504.00
602-A	Reinforcing Steel	79	0.00	LBS		79.00	$3.00	$ -	$ 237.00
603-CE	22"x13" Concrete Arch Pipe, Class A III, Flexible Plastic Gasket	8	16.00	L.F.	8		$75.00	$ 600.00	$ -
603-CF	22"x13" Concrete Arch Pipe End Section	1	1.00	Each			$980.00	$ -	$ -

907-603-PE	18" Corrugated Polyethylene Pipe with Bedding Material	78	40.00	L.F.		38	$18.00	$ -	$ 684.00
604-A	Castings	1040	1152.00	LBS	112.00		$4.00	$ 448.00	$ -
604-B	Gratings	1200	380.00	LBS		820	$4.00	$ -	$ 3,280.00
607-B	96" Chain Link Fence, Class I	32	21.00	L.F.		11	$43.00	$ -	$ 473.00
607-PP	60" Wood Fence with Galvanized Steel Posts	24	24.00	L.F.			$40.00	$ -	$ -
607-PP	60"x108" Double Wood Gate	1	1.00	Each			$500.00	$ -	$ -
608-A	Concrete Sidewalk, Without Reinforcement (4" Thickness)	2852	2799.00	S.Y.		53.00	$36.00	$ -	$ 1,908.00
609-D	Combination Concrete Curb and Gutter (All Types)	469	549.70	L.F.	80.7		$17.00	$ 1,371.90	$ -
614-A	Concrete Driveway, Without Reinforcement (6" Thickness)	1043	410.81	S.Y.		632.19	$46.00	$ -	$ 29,080.74
614-A	Concrete Driveway, Without Reinforcement (8" Thickness)	17	86.89	S.Y.	69.8928		$56.00	$ 3,914.00	$ -
613-D	Adjustment of Fire Hydrant	2	0.00	Each		2	$800.00	$ -	$ 1,600.00
613-D	Adjustment of Utility Appurtenance	2	0.00	Each		2	$500.00	$ -	$ 1,000.00
613-D	Adjustment of Inlet	5	2.00	Each		3	$1,200.00	$ -	$ 3,600.00
618-A	Maintenance of Traffic	1	0.75	Lump Sum		0.25	$6,000.00	$ -	$ 1,500.00
619-D	Standard Roadside Construction Signs, 10 Square Feet or More	80	80.00	S.F.			$12.00	$ -	$ -
619-D	Standard Roadside Construction Signs, Less Than 10 Square Feet	162	81.00	S.F.		81	$12.00	$ -	$ 972.00
619-G	Barricades, Type III Double Faced	48	48.00	L.F.			$20.00	$ -	$ -
620-A	Mobilization	1	1.00	Lump Sum			$8,500.00	$ -	$ -
907-626-G	4" Thermoplastic Detail Stripe, White	4420	3949.00	L.F.		471	$0.88	$ -	$ 414.48
907-626-H	Thermoplastic Legend White	100	171.10	S.F.	71.1		$4.50	$ 319.95	$ -
630-A	Standard Roadside Signs, Sheet Aluminum, 0.080" Thickness	166	182.00	S.F.	16		$25.00	$ 400.00	$ -
630-C	Steel U-Section Posts, 2.0 Lbs/Ft	602	260.00	L.F.		342	$3.00	$ -	$ 1,026.00
907-630-O	Remove and Reset Signs (All Sizes)	5	5.00	Each			$200.00	$ -	$ -
907-639-A	Traffic Signal Equipment Pole, Type VI, 8' Shaft	1	1.00	Each			$1,500.00	$ -	$ -
907-639-C	Pole Foundations, 24" Diameter	1	1.00	Each			$650.00	$ -	$ -
640-A	Traffic Signal Heads, Type 6 LED	2	2.00	Each			$1,600.00	$ -	$ -
907-642-A	Solid State Traffic Actuated Controller Modification	1	1.00	L.S.			$350.00	$ -	$ -
647-A	Pullbox, Type 2	1	1.00	Each			$350.00	$ -	$ -
666-B	Electrical Cable, Underground in Conduit	250	250.00	L.F.			$3.00	$ -	$ -
668-A	Traffic Signal Conduit, Type IV Underground, Roll Pipe 2"	40	40.00	L.F.			$5.00	$ -	$ -
699-A	Roadway Construction Stakes	1	1.00	Lump Sum			$2,500.00	$ -	$ -
							subtotals	**$17,930.35**	**$79,707.22**

Alternate No. 1

Item No.	Item Description	Original Quantity	Final Quantity	Unit	Overrun	Underrun	Unit Price	Increase	Decrease
201-A	Clearing and Grubbing	1	1.00	Lump Sum			$1,500.00	$ -	$ -
202-B	Removal of Pavement (All Types & Depths)	42	42.00	S.Y.			$13.00	$ -	$ -
202-B	Removal of Pipe (All Types & Sizes)	24	0.00	L.F.		24.00	$10.00	$ -	$ 240.00
203-A	Unclassified Excavation, FM, AH	4	4.00	C.Y.			$5.00	$ -	$ -
203-EX	Borrow Excavation, LVM, AH, Class B9	16	16.00	C.Y.			$13.00	$ -	$ -
203-G	Excess Excavation, LVM, AH	6	6.00	C.Y.			$5.00	$ -	$ -
211-B	Top Soil for Slope Treatment (Contractor Furnished)	4	4.00	C.Y.			$18.00	$ -	$ -
216-A	Solid Sodding	28	7.00	S.Y.		21	$4.00	$ -	$ 84.00
234-A	Temporary Silt Fence	60	100.00	L.F.	40		$3.00	$ 120.00	$ -
907-237-A	Wattles, 20"	70	0.00	L.F.		70	$6.00	$ -	$ 420.00
907-258-K	Bollard	1	0.00	Each		1.00	$900.00	$ -	$ 900.00
907-304-H	Size 610 Crushed Stone Base, LVM	14	0.00	C.Y.		14	$56.00	$ -	$ 784.00
501-B	5" Plain Cement Concrete Pavement, Drag Finish	23	0.00	S.Y.		23.00	$50.00	$ -	$ 1,150.00
501-B	8" Plain Cement Concrete Pavement, Drag Finish	19	0.00	S.Y.		19	$56.00	$ -	$ 1,064.00
907-601-B	Class "B" Structural Concrete - Minor Structures	0.4	0.00	C.Y.		0.40	$1,200.00	$ -	$ 480.00
603-CA	18" Reinforced Concrete Pipe, Class III, Rubber Type Gaskets	12	16.00	L.F.	4		$45.00	$ 180.00	$ -
603-CB	18" Reinforced Concrete End Section	1	1.00	Each			$950.00	$ -	$ -
604-B	Gratings	600	568.00	LBS		32	$4.00	$ -	$ 128.00
608-A	Concrete Sidewalk, Without Reinforcement (4" Thickness)	90	90.00	S.Y.			$36.00	$ -	$ -
613-D	Adjustment of Utility Appurtenance	1	0.00	Each		1	$500.00	$ -	$ 500.00
613-D	Adjustment of Inlet	1	1.00	Each			$1,200.00	$ -	$ -
620-A	Mobilization	1	1.00	Lump Sum			$1,500.00	$ -	$ -
907-626-B	4" Thermoplastic Stripe, Continuous White	300	313.00	L.F.	13		$0.48	$ 6.24	$ -
907-626-D	4" Thermoplastic Stripe, Continuous Yellow	600	620.00	L.F.	20		$0.48	$ 9.60	$ -
907-626-G	4" Thermoplastic Detail Stripe, White	78	0.00	L.F.		78.00	$0.88	$ -	$ 68.64
907-626-H	Thermoplastic Legend White (4" Equivalent Length)	48	0.00	L.F.		48	$4.50	$ -	$ 216.00
628-B	4" Cold Plastic Traffic Stripe, Continuous White	300	313.00	L.F.	13		$0.48	$ 6.24	$ -
628-G	4" Cold Plastic Detail Stripe, White	243	528.00	L.F.	285		$0.88	$ 250.80	$ -
628-H	Cold Plastic Legend White (4" Equivalent Length)	32	88.00	L.F.	56.00		$3.50	$ 196.00	$ -
628-H	Cold Plastic Legend White	192	149.40	S.F.		42.60	$5.50	$ -	$ 234.30

630-A	Standard Roadside Signs, Sheet Aluminum, 0.080" Thickness	19	14.25	S.F.		4.75	$7.00	$ -	$ 33.25
630-C	Steel U-Section Posts, 2.0 Lbs/Ft	56	60.00	L.F.	4		$2.00	$ 8.00	$ -
699-A	Roadway Construction Stakes	1	1.00	Lump Sum			$1,500.00		
							subtotals	**$776.88**	**$6,302.19**
							TOTAL	**$38,254.13**	**$110,651.33**

Phase IV, VI and Alt. No. 1 Original Contract Amount	$881,097.90
Project Decreases	$72,397.20
Total Amount Paid	**$808,700.70**

CONTROL MONUMENT 1
60d GALV. NAIL IN GROUND
N 662310.977
E 834082.501
16.2 FT RT STA. 12+44.44

BENCH MARK ELEVATION 178.91
SE CORNER OF CURB INLET
12.5 FT LT. STA. 12+91.58

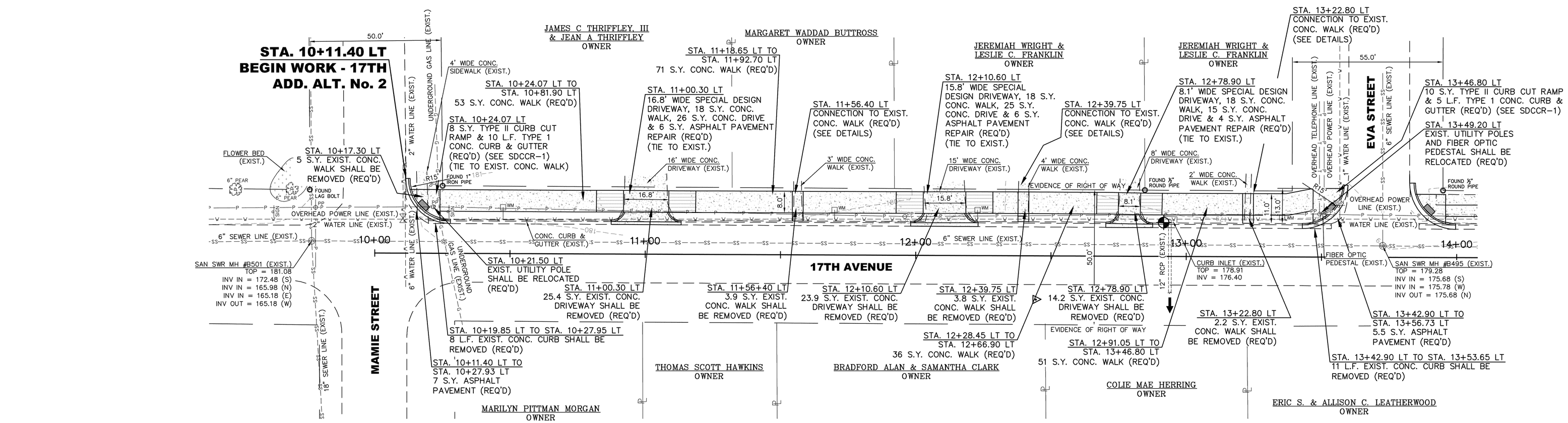

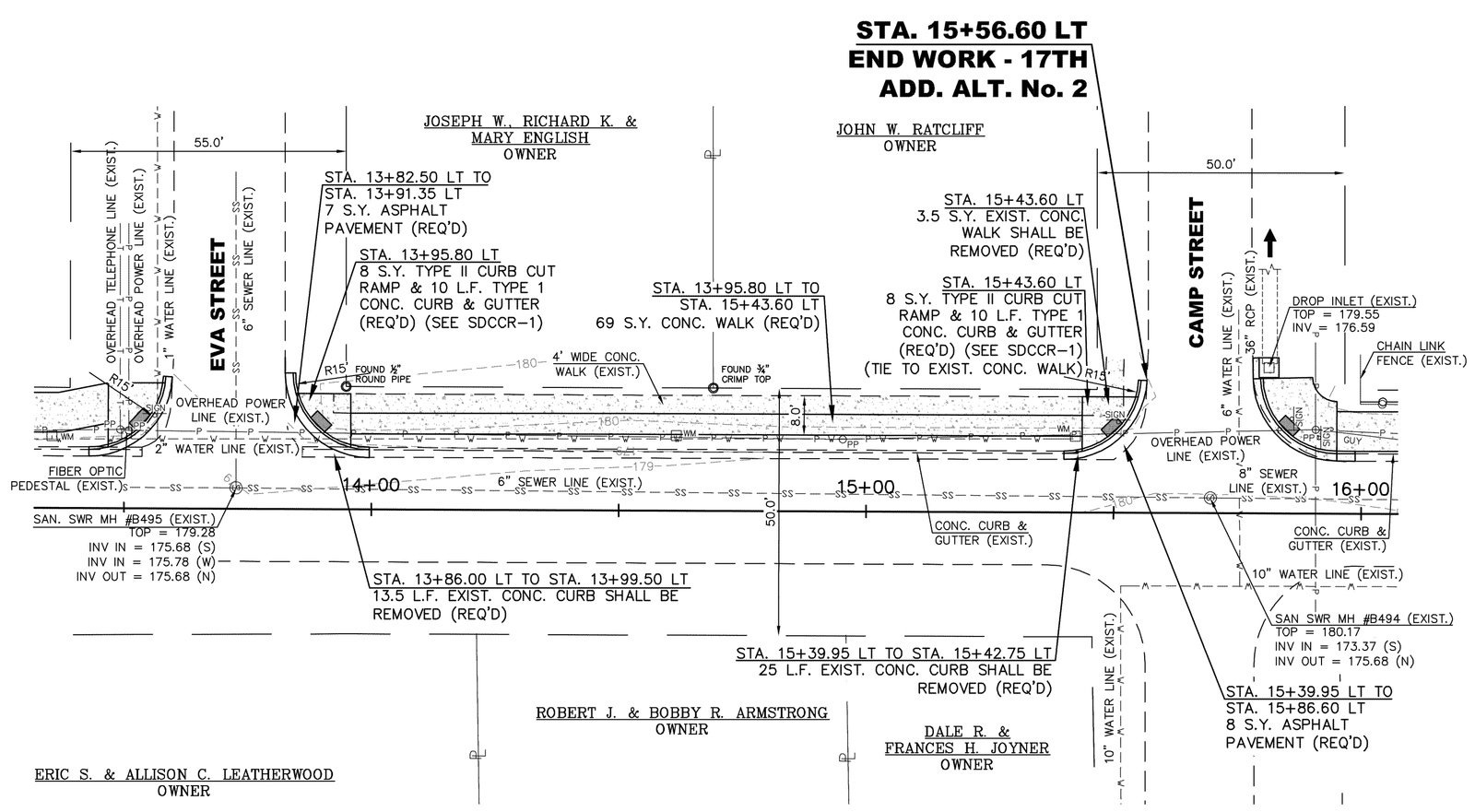

NO.	DATE	DESCRIPTION	BY

PLAN – 17TH AVENUE

PEDESTRIAN CONNECTIONS – PHASE VI
CITY OF HATTIESBURG
FORREST COUNTY, MISSISSIPPI

SHOWS, DEARMAN & WAITS, INC.
CONSULTING ENGINEERS
P.O. BOX 1711
HATTIESBURG, MISSISSIPPI, 39403-1711
301 SECOND AVENUE
HATTIESBURG, MISSISSIPPI, 39401
HTTP://WWW.SD-W.COM
P: (601) 544 - 1821
F: (601) 544 - 0501

Drawn by: RES	Checked by: JTW	Scale: 1" = 20'
Date: 06-09-2011	Working No. P4	
Drawing No.: 1266.002B	Sheet No. 30	

Supplemental Agreement #1

17TH AVENUE STA. 10+00 TO STA. 15+60

CONTROL MONUMENT 2
60d GALV. NAIL IN GROUND
N 663019.806
E 834053.119
16.3 FT LT STA. 19+53.13

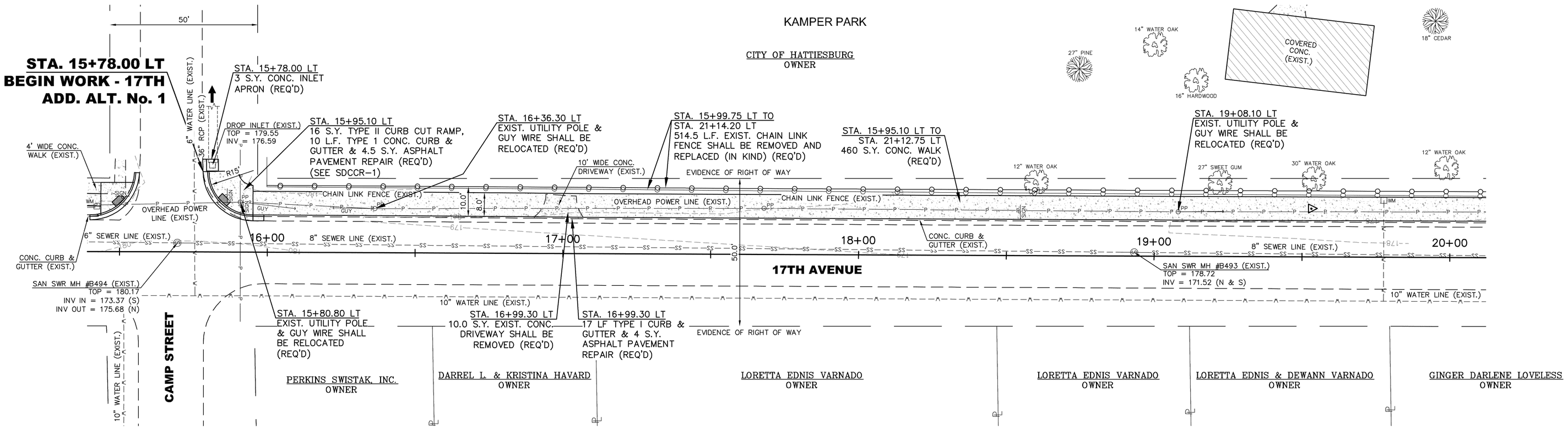

BENCH MARK ELEVATION 177.19
CENTER OF "N" ON SEWER MANHOLE
0.6 FT RT STA. 22+48.84

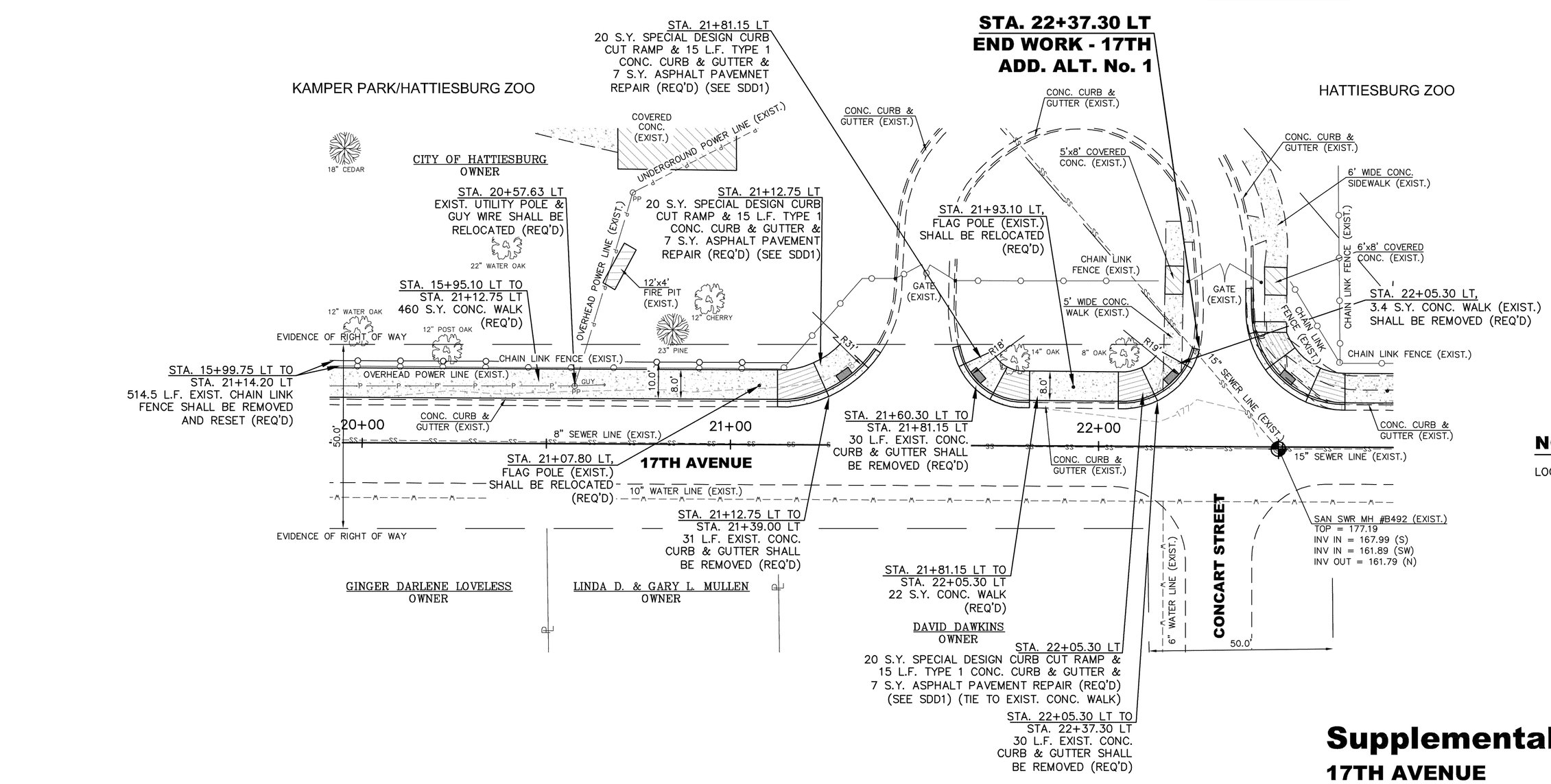

NOTE:

LOCATION OF RELOCATED FLAG POLES SHALL BE AS DIRECTED.

Supplemental Agreement No. 1

17TH AVENUE STA. 15+60 TO STA. 22+40

NO.	DATE	DESCRIPTION	BY

PLAN – 17TH AVENUE

PEDESTRIAN CONNECTIONS – PHASE VI
CITY OF HATTIESBURG
FORREST COUNTY, MISSISSIPPI

SHOWS, DEARMAN & WAITS, INC.
CONSULTING ENGINEERS
P.O. BOX 1711
HATTIESBURG, MISSISSIPPI, 39403-1711
301 SECOND AVENUE
HATTIESBURG, MISSISSIPPI, 39401
HTTP://WWW.SD-W.COM
P: (601) 544 - 1821
F: (601) 544 - 0501

Drawn by: RES	Checked by: JTW	Scale: 1" = 20'
Date: 06-09-2011	Working No. P5	
Drawing No.: 1266.002B	Sheet No. 31	

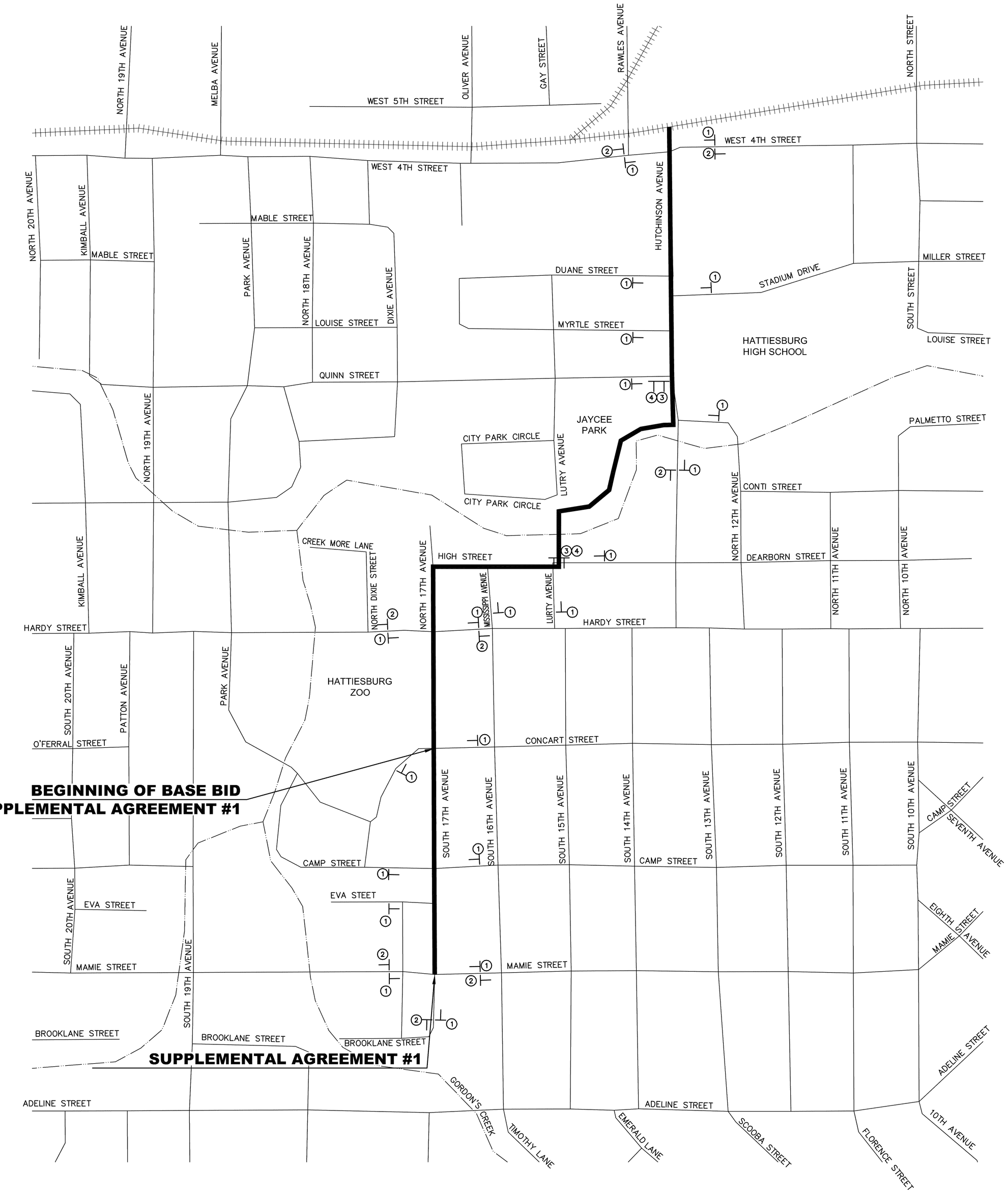

NO.	DATE	DESCRIPTION	BY

CONSTRUCTION SIGNING PLAN – PHASE VI

PEDESTRIAN CONNECTIONS – PHASES IV & VI
CITY OF HATTIESBURG
FORREST COUNTY, MISSISSIPPI

SHOWS, DEARMAN & WAITS, INC.
CONSULTING ENGINEERS
P.O. BOX 1711
HATTIESBURG, MISSISSIPPI, 39403-1711
391 SECOND AVENUE
HATTIESBURG, MISSISSIPPI, 39401
HTTP://WWW.SDW.COM
P: (601) 544 - 1821
F: (601) 544 - 0501

Drawn by: RES	Checked by: JTW	Scale: AS NOTED
Date: 06–09–2011	Working No. CS2	
Drawing No.: 1266.002B	Sheet No. 42	

City of Hattiesburg, MS

200 Forrest St.
P.O. Box 1898
Hattiesburg, MS 39401

Master

File Number: 2012-1298

File ID:	2012-1298	**Type:**	Regular Agenda Item	**Status:**	Agenda Ready
Version:	1	**Reference:**		**In Control:**	City Council
				File Created:	10/30/2012
Brief Title:	Authorize Mayor to execute Supplemental Agreement with Neel-Schaffer, Inc. for the Shared-Use Pathway from the Newman-Buschman Neighborhood to Chain Park project to be in compliance with ARRA requirements.			**Final Action:**	11/06/2012
				Minute Book Number:	MB2012-1/382

Title:

Authorize Mayor to execute Supplemental Agreement to the Agreement for Professional Services between the City of Hattiesburg and Neel-Schaffer, Inc. for the Shared-Use Pathway from the Newman-Buschman Neighborhood to Chain Park dated February 21, 2012 adding specific language to the agreement to be in compliance with ARRA requirements.

Notes:

Sponsors:		**Enactment Date:**	
Attachments:	Neel-Schaffer Amendment ARRA Compliance, executed Neel-Schaffer Amendment ARRA Compliance	**Enactment Number:**	
Contact:		**Meeting Date:**	11/06/2012
Drafter:	Sharon Waits	**Effective Date:**	

History of Legislative File

Version:	Acting Body:	Date:	Action:	Sent To:	Due Date:	Return Date:	Result:
1	City Council	11/06/2012	Authorize				Pass

Action Text: A MOTION was made by Council Member Naylor and seconded by Council Vice President Ware to Authorize Mayor to execute Supplemental Agreement to the Agreement for Professional Services between the City of Hattiesburg and Neel-Schaffer, Inc. for the Shared-Use Pathway from the Newman-Buschman Neighborhood to Chain Park dated February 21, 2012 adding specific language to the agreement to be in compliance with ARRA requirements.

There being no discussion, the Motion received the affirmative vote of the Council as follows:

Yeas: 5 - Bradley, Delgado, Carroll, Ware and Naylor

Nays: 0

Yea:	5	President Bradley Council Member Delgado Council Member Carroll Vice President Ware Council Member Naylor
TEL-No Vote:	0	

Text of Legislative File 2012-1298

Title

Authorize Mayor to execute Supplemental Agreement to the Agreement for Professional Services between the City of Hattiesburg and Neel-Schaffer, Inc. for the Shared-Use Pathway from the Newman-Buschman Neighborhood to Chain Park dated February 21, 2012 adding specific language to the agreement to be in compliance with ARRA requirements.

Summary

Authorize Mayor to execute Supplemental Agreement to the Agreement for Professional Services between the City of Hattiesburg and Neel-Schaffer, Inc. for the Shared-Use Pathway from the Newman-Buschman Neighborhood to Chain Park dated February 21, 2012 adding specific language to the agreement to be in compliance with ARRA requirements.

Budget Information

No budget impact

Expenditure Type

Purchasing Item

Publication Information

SUPPLEMENTAL AGREEMENT

TO THE

AGREEMENT FOR PROFESSIONAL SERVICES

BETWEEN THE

CITY OF HATTIESBURG

AND

NEEL-SCHAFFER, INC.

SHARED-USE PATHWAY FROM NEWMAN-BUSCHMAN NEIGHBORHOOD TO CHAIN PARK

PROJECT NO. 8933

THIS IS AN AMENDMENT made on February 21, 2012, to the Prime Agreement for Professional Services (Prime Agreement) between the **CITY OF HATTIESBURG**, P. O. Box 1898, Hattiesburg, Mississippi 39403-1898 **(OWNER)** and **NEEL-SCHAFFER, INC.**, 704 Hardy Street, Hattiesburg, Mississippi 39401 **(ENGINEER)** executed on February 21, 2012 for Design Phase Services, Railroad Permit Services, and Resident Project Representation Services on the Shared-use Pathway from Newman-Buschman to Chain Park Project.

1. The **ENGINEER** and **OWNER** hereby agree to the following changes and amendments to the Prime Agreement as requested by the Owner:

   a) Include Exhibit G:

   b) Include Rules and Regulations from Federal Register Volume 74, Number 77 dated April 23, 2009:

2. The **ENGINEER** and **OWNER** hereby agree to the following changes and amendments to the Prime Agreement,

IN WITNESS WHEREOF, the parties hereto have made and executed this **Agreement** as of the day and year first written above.

OWNER: CITY OF HATTIESBURG	**ENGINEER: NEEL-SCHAFFER, INC.**
_____	_____
WITNESS: _____	**WITNESS:** _____

EXHIBIT G

Both the City of Hattiesburg and Neel-Schaffer, Inc. acknowledge the requirements of 2 CFR Part 176 as the project includes ARRA funding sources.

Rules and Regulations

Federal Register
Vol. 74, No. 77
Thursday, April 23, 2009

This section of the FEDERAL REGISTER contains regulatory documents having general applicability and legal effect, most of which are keyed to and codified in the Code of Federal Regulations, which is published under 50 titles pursuant to 44 U.S.C. 1510.

The Code of Federal Regulations is sold by the Superintendent of Documents. Prices of new books are listed in the first FEDERAL REGISTER issue of each week.

OFFICE OF MANAGEMENT AND BUDGET

2 CFR Part 176

Requirements for Implementing Sections 1512, 1605, and 1606 of the American Recovery and Reinvestment Act of 2009 for Financial Assistance Awards

AGENCY: Office of Federal Financial Management, Office of Management and Budget (OMB).

ACTION: Interim final guidance.

SUMMARY: The Office of Federal Financial Management (OFFM) is establishing Governmentwide guidance and standard award terms for agencies to include in financial assistance awards (namely, grants, cooperative agreements, and loans) as part of their implementation of sections 1512, and 1605, and 1606 of the American Recovery and Reinvestment Act of 2009 (Pub. L. 111–5). This guidance does not cover all award terms that may be needed on financial assistance awards funded directly or assisted by the Federal Government under the Recovery Act. The focus of this guidance is on implementing Recovery Act provisions that may require greater clarification in order to foster consistent application across the Federal Government. Under the interim final guidance, agencies would use the standard award terms in their financial assistance awards to require recipients and subrecipients (first-tier that are not individuals) to maintain current registrations in the Central Contractor Registration (CCR) database; to require recipients to report quarterly on project or activity status, subgrant and subcontract information; to notify recipients of the domestic sourcing ("Buy American") requirements that apply to certain iron, steel and manufactured goods; to notify recipients of the wage rate requirements that apply to certain projects; and to ensure proper accounting and reporting of Recovery Act expenditures in single audits.

DATES: This document is effective April 23, 2009. To be considered in preparation of the final guidance, comments on the interim final guidance must be received by no later than June 22, 2009.

ADDRESSES: Due to potential delays in OMB's receipt and processing of mail sent through the U.S. Postal Service, we encourage respondents to submit comments electronically to ensure timely receipt. We cannot guarantee that comments mailed will be received before the comment closing date.

Comments may be sent to via *http://www.regulations.gov*—a Federal E-Government Web site that allows the public to find, review, and submit comments on documents that agencies have published in the **Federal Register** and that are open for comment. Simply type "Recovery Act Guidance" (in quotes) in the Comment or Submission search box, click Go, and follow the instructions for submitting comments. Comments received by the date specified above will be included as part of the official record.

Electronic mail comments may also be submitted to: Marguerite Pridgen at *mpridgen@omb.eop.gov*. Please include "Recovery Act Guidance" in the subject line and the full body of your comments in the text of the electronic message and not as an attachment. Please include your name, title, organization, postal address, telephone number, and e-mail address in the text of the message. Comments may also be submitted via facsimile to (202) 395–3952.

Comments may be mailed to Marguerite Pridgen, Office of Federal Financial Management, Office of Management and Budget, Room 6025, New Executive Office Building, Washington, DC 20503.

All responses will be summarized and included in the request for OMB approval.

FOR FURTHER INFORMATION CONTACT: Marguerite Pridgen, Office of Federal Financial Management, Office of Management and Budget, telephone (202) 395–7844 (direct) or (202) 395–3993 (main office) and e-mail: *Marguerite_E._Pridgen@omb.eop.gov*.

SUPPLEMENTARY INFORMATION:

I. Background

A. Section 1512(c) of the American Recovery and Reinvestment Act of 2009 (Pub. L. 111–5, hereafter referred to as "the Recovery Act" or "the Act") requires, as a condition of receipt of funds, quarterly reporting on the use of funds. The data elements proposed for reporting the information described in section 1512(c) were published in the **Federal Register** on April 1, 2009 [74 FR 14824]. An entity that receives assistance funding under the Recovery Act must report information including, but not limited to,

i. The total amount of recovery funds received from that agency;

ii. The amount of recovery funds received that were expended or obligated to projects or activities; and

iii. A detailed list of all projects or activities for which recovery funds were expended or obligated, including—

1. The name of the project or activity;

2. A description of the project or activity;

3. An evaluation of the completion status of the project or activity;

4. An estimate of the number of jobs created and the number of jobs retained by the project or activity; and

5. For infrastructure investments made by State and local governments, the purpose, total cost, and rationale of the agency for funding the infrastructure investment with funds made available under this Act, and name of the person to contact at the agency if there are concerns with the infrastructure investment.

iv. Detailed information on any subcontracts or subgrants awarded by the recipient to include the data elements required to comply with the Federal Funding Accountability and Transparency Act of 2006, as amended (Pub. L. 109–282, hereafter referred to as "the Transparency Act"), allowing aggregate reporting on awards below $25,000 or to individuals, as prescribed by the Director of the Office of Management and Budget. The Transparency Act identifies specific data elements that the Web site (USAspending.gov) must include for each Federal award and authorizes OMB to specify additional elements for other relevant information. A 2008 amendment to the Transparency Act called the "Government Funding Transparency Act of 2008" (Pub. L. 110–252) added a requirement to collect

compensation information on certain chief executive officers (CEOs) of the recipient and subrecipient entity. An entity that receives assistance funding under the Recovery Act must report information required under the Transparency Act including, but not limited to,

1. The name of the entity receiving the award;
2. The amount of the award;
3. The transaction type;
4. The funding agency;
5. The Catalog of Federal Domestic Assistance number;
6. The program source;
7. The location of the entity receiving the award, including four data elements for the city, State, Congressional district, and country;
8. The location of the primary place of performance under the award, including four data elements for the city, State, Congressional district, and country;
9. A unique identifier of the entity receiving the award;
10. A unique identifier of the parent entity of the recipient, should the recipient be owned by another entity; and
11. The names and total compensation of the five most highly compensated officers of the company if it received (1) 80% or more of its annual gross revenues in Federal awards; and (2) $25M or more in annual gross revenue from Federal awards.

B. Section 1512(h) of the Recovery Act requires recipients of Recovery Act funds, including those receiving funds directly from the Federal Government, to register in the Central Contractor Registration (CCR) database at *http://www.ccr.gov*. Because recipients must report information on their first-tier contracts and awards, 2 CFR part 176 would establish a requirement for subrecipient registration in the CCR as a way to help ensure consistent reporting of data about each entity and thereby make the data more useful to the public. Without the requirement, multiple recipients doing business with the same entity may use different variations of the entity's name, address, or parent organization when they each report on their awards to the entity. It should be noted that in order to register in CCR, a valid Data Universal Numbering System (DUNS) Number is required.

C. Section 1605 of the Recovery Act requires that projects, funded by the Recovery Act, for the construction, alteration, maintenance, or repair of a public building or public work use American iron, steel, and manufactured goods in the project unless one of the specified exemptions applies. The Act provides that this requirement be applied in a manner consistent with U.S. obligations under international agreements. Definitions of "manufactured good," "public building and public work," and other terms as they pertain to the Buy American guidance in 2 CFR part 176 are found in § 176.140 and § 176.160.

D. Section 1606 of the Recovery Act requires the payment of Davis-Bacon Act (40 U.S.C. 31) wage rates to "laborers and mechanics employed by contractors and subcontractors on projects funded directly by or assisted in whole or in part by and through the Federal Government" pursuant to the Recovery Act.

E. To maximize the transparency and accountability of funds authorized under the Recovery Act as required by Congress and in accordance with 2 CFR 215.21, "Uniform Administrative Requirements for Grants and Agreements With Institutions of Higher Education, Hospitals, and other Non-Profit Organizations" and OMB Circular A–102 Common Rules provisions, recipients agree to maintain records that identify adequately the source and application of Recovery Act funds. Guidance and an award term are provided in part 176 to help ensure that recipients understand their responsibilities with respect to tracking, accounting and reporting transactions during the award and in preparing audit documentation and reports in accordance with OMB Circular A–133, if applicable.

II. Next Steps

We will consider all comments received on the interim final version of the OMB guidance as we develop the final guidance. Federal agencies that award grants, cooperative agreements, and other financial assistance awards will immediately implement this interim final guidance through the appropriate award terms. The award terms on awards made while this interim final version of this guidance is in effect do not need to be modified to reflect any modified award terms in the final guidance unless specifically required in the final guidance.

List of Subjects in 2 CFR Part 176

Assistance awards, Authorized agency action official, Award officials, Buy American, Classified, Davis-Bacon Act, Grants, Cooperative agreements, Loans, Recovery Act, Wage rate.

Danny Werfel,
Deputy Controller.

■ For the reasons set forth above, the Office of Management and Budget amends 2 CFR chapter I by adding part 176 to read as follows:

PART 176—AWARD TERMS FOR ASSISTANCE AGREEMENTS THAT INCLUDE FUNDS UNDER THE AMERICAN RECOVERY AND REINVESTMENT ACT OF 2009, PUBLIC LAW 111–5

Sec.
176.10 Purpose of this part.
176.20 Agency responsibilities (general).
176.30 Definitions.

Subpart A—Reporting and Registration Requirements under Section 1512 of the American Recovery and Reinvestment Act of 2009

176.40 Procedure.
176.50 Award term—Reporting and registration requirements under section 1512 of the Recovery Act.

Subpart B—Buy American Requirement Under Section 1605 of the American Recovery and Reinvestment Act of 2009

176.60 Statutory requirement.
176.70 Policy.
176.80 Exceptions.
176.90 Non-application to acquisitions covered under international agreements.
176.100 Timely determination concerning the inapplicability of section 1605 of the Recovery Act.
176.110 Evaluating proposals of foreign iron, steel, and/or manufactured goods.
176.120 Determinations on late requests.
176.130 Noncompliance.
176.140 Award term—Required Use of American Iron, Steel, and Manufactured Goods—Section 1605 of the American Recovery and Reinvestment Act of 2009.
176.150 Notice of Required Use of American Iron, Steel, and Manufactured Goods—Section 1605 of the American Recovery and Reinvestment Act of 2009.
176.160 Award term—Required Use of American Iron, Steel, and Manufactured Goods (covered under International Agreements)—Section 1605 of the American Recovery and Reinvestment Act of 2009.
176.170 Notice of Required Use of American Iron, Steel, and Manufactured Goods (covered under International Agreements)—Section 1605 of the American Recovery and Reinvestment Act of 2009.

Appendix to Subpart B of Part 176—U.S. States, Other Sub-Federal Entities, and Other Entities Subject to U.S. Obligations Under International Agreements

Subpart C—Wage Rate Requirements Under Section 1606 of the American Recovery and Reinvestment Act of 2009

176.180 Procedure.

176.190 Award term—Wage Rate Requirements under Section 1606 of the American Recovery and Reinvestment Act of 2009.

Subpart D—Single Audit Information for Recipients of Recovery Act Funds

176.200 Procedure.
176.210 Award term—Recovery Act Transactions listed in Schedule of Expenditures of Federal Awards and Recipient Responsibilities for Informing Subrecipients.

Authority: American Recovery and Reinvestment Act of 2009, Public Law 111–5; Federal Funding Accountability and Transparency Act of 2006, (Pub. L. 109–282), as amended.

§ 176.10 Purpose of this part.

This part establishes Federal Governmentwide award terms for financial assistance awards, namely, grants, cooperative agreements, and loans, to implement the cross-cutting requirements of the American Recovery and Reinvestment Act of 2009, Public Law 111–5 (Recovery Act). These requirements are cross-cutting in that they apply to more than one agency's awards.

§ 176.20 Agency responsibilities (general).

(a) In any assistance award funded in whole or in part by the Recovery Act, the award official shall indicate that the award is being made under the Recovery Act, and indicate what projects and/or activities are being funded under the Recovery Act. This requirement applies whenever Recovery Act funds are used, regardless of the assistance type.

(b) To maximize transparency of Recovery Act funds required for reporting by the assistance recipient, the award official shall consider structuring assistance awards to allow for separately tracking Recovery Act funds.

(c) Award officials shall ensure that recipients comply with the Recovery Act requirements of Subpart A. If the recipient fails to comply with the reporting requirements or other award terms, the award official or other authorized agency action official shall take the appropriate enforcement or termination action in accordance with 2 CFR 215.62 or the agency's implementation of the OMB Circular A–102 grants management common rule. OMB Circular A–102 is available at *http://www.whitehouse.gov/omb/circulars/a102/a102.html.*

(d) The award official shall make the recipient's failure to comply with the reporting requirements a part of the recipient's performance record.

§ 176.30 Definitions.

As used in this part—

Award means any grant, cooperative agreement or loan made with Recovery Act funds. Award official means a person with the authority to enter into, administer, and/or terminate financial assistance awards and make related determinations and findings.

Classified or *"classified information"* means any knowledge that can be communicated or any documentary material, regardless of its physical form or characteristics, that—

(1)(i) Is owned by, is produced by or for, or is under the control of the United States Government; or

(ii) Has been classified by the Department of Energy as privately generated restricted data following the procedures in 10 CFR 1045.21; and

(2) Must be protected against unauthorized disclosure according to Executive Order 12958, Classified National Security Information, April 17, 1995, or classified in accordance with the Atomic Energy Act of 1954.

Recipient means any entity other than an individual that receives Recovery Act funds in the form of a grant, cooperative agreement or loan directly from the Federal Government.

Recovery funds or Recovery Act funds are funds made available through the appropriations of the American Recovery and Reinvestment Act of 2009, Public Law 111–5.

Subaward means—

(1) A legal instrument to provide support for the performance of any portion of the substantive project or program for which the recipient received this award and that the recipient awards to an eligible subrecipient;

(2) The term does not include the recipient's procurement of property and services needed to carry out the project or program (for further explanation, see §____.210 of the attachment to OMB Circular A–133, "Audits of States, Local Governments, and Non-Profit Organizations"). OMB Circular A–133 is available at *http://www.whitehouse.gov/omb/circulars/a133/a133.html.*

(3) A subaward may be provided through any legal agreement, including an agreement that the recipient or a subrecipient considers a contract.

Subcontract means a legal instrument used by a recipient for procurement of property and services needed to carry out the project or program.

Subrecipient or *Subawardee* means a non-Federal entity that expends Federal awards received from a pass-through entity to carry out a Federal program, but does not include an individual that is a beneficiary of such a program. A subrecipient may also be a recipient of other Federal awards directly from a Federal awarding agency. Guidance on distinguishing between a subrecipient and a vendor is provided in §____.210 of OMB Circular A–133.

Subpart A—Reporting and Registration Requirements Under Section 1512 of the American Recovery and Reinvestment Act of 2009

§ 176.40 Procedure.

The award official shall insert the standard award term in this Subpart in all awards funded in whole or in part with Recovery Act funds, except for those that are classified, awarded to individuals, or awarded under mandatory and entitlement programs, except as specifically required by OMB, or expressly exempted from the reporting requirement in the Recovery Act.

§ 176.50 Award term—Reporting and registration requirements under section 1512 of the Recovery Act.

Agencies are responsible for ensuring that their recipients report information required under the Recovery Act in a timely manner. The following award term shall be used by agencies to implement the recipient reporting and registration requirements in section 1512:

(a) This award requires the recipient to complete projects or activities which are funded under the American Recovery and Reinvestment Act of 2009 (Recovery Act) and to report on use of Recovery Act funds provided through this award. Information from these reports will be made available to the public.

(b) The reports are due no later than ten calendar days after each calendar quarter in which the recipient receives the assistance award funded in whole or in part by the Recovery Act.

(c) Recipients and their first-tier recipients must maintain current registrations in the Central Contractor Registration (*http://www.ccr.gov*) at all times during which they have active federal awards funded with Recovery Act funds. A Dun and Bradstreet Data Universal Numbering System (DUNS) Number (*http://www.dnb.com*) is one of the requirements for registration in the Central Contractor Registration.

(d) The recipient shall report the information described in section 1512(c) of the Recovery Act using the reporting instructions and data elements that will be provided online at *http://www.FederalReporting.gov* and ensure that any information that is pre-filled is corrected or updated as needed.

Subpart B—Buy American Requirement Under Section 1605 of the American Recovery and Reinvestment Act of 2009

§ 176.60 Statutory requirement.

Section 1605 of the Recovery Act prohibits use of recovery funds for a project for the construction, alteration, maintenance, or repair of a public building or public work unless all of the iron, steel, and manufactured goods used in the project are produced in the United States. The law requires that this prohibition be applied in a manner consistent with U.S. obligations under international agreements, and it provides for waiver under three circumstances:

(a) Iron, steel, or relevant manufactured goods are not produced in the United States in sufficient and reasonably available quantities and of a satisfactory quality;

(b) Inclusion of iron, steel, or manufactured goods produced in the United States will increase the cost of the overall project by more than 25 percent; or

(c) Applying the domestic preference would be inconsistent with the public interest.

§ 176.70 Policy.

Except as provided in § 176.80 or § 176.90—

(a) None of the funds appropriated or otherwise made available by the Recovery Act may be used for a project for the construction, alteration, maintenance, or repair of a public building or public work (see definitions at §§ 176.140 and 176.160) unless—

(1) The public building or public work is located in the United States; and

(2) All of the iron, steel, and manufactured goods used in the project are produced or manufactured in the United States.

(i) Production in the United States of the iron or steel used in the project requires that all manufacturing processes must take place in the United States, except metallurgical processes involving refinement of steel additives. These requirements do not apply to iron or steel used as components or subcomponents of manufactured goods used in the project.

(ii) There is no requirement with regard to the origin of components or subcomponents in manufactured goods used in the project, as long as the manufacturing occurs in the United States.

(b) Paragraph (a) of this section shall not apply where the Recovery Act requires the application of alternative Buy American requirements for iron, steel, and manufactured goods.

§ 176.80 Exceptions.

(a) When one of the following exceptions applies in a case or category of cases, the award official may allow the recipient to use foreign iron, steel and/or manufactured goods in the project without regard to the restrictions of section 1605 of the Recovery Act:

(1) *Nonavailability.* The head of the Federal department or agency may determine that the iron, steel or relevant manufactured good is not produced or manufactured in the United States in sufficient and reasonably available commercial quantities of a satisfactory quality. The determinations of nonavailability of the articles listed at 48 CFR 25.104(a) and the procedures at 48 CFR 25.103(b)(1) also apply if any of those articles are manufactured goods needed in the project.

(2) *Unreasonable cost.* The head of the Federal department or agency may determine that the cost of domestic iron, steel, or relevant manufactured goods will increase the cost of the overall project by more than 25 percent in accordance with § 176.110.

(3) *Inconsistent with public interest.* The head of the Federal department or agency may determine that application of the restrictions of section 1605 of the Recovery Act would be inconsistent with the public interest.

(b) When a determination is made for any of the reasons stated in this section that certain foreign iron, steel, and/or manufactured goods may be used—

(1) The award official shall list the excepted materials in the award; and

(2) The head of the Federal department or agency shall publish a notice in the **Federal Register** within two weeks after the determination is made, unless the item has already been determined to be domestically nonavailable. A list of items that are not domestically available is at 48 CFR 25.104(a). The **Federal Register** notice or information from the notice may be posted by OMB to Recovery.gov. The notice shall include—

(i) The title "Buy American Exception under the American Recovery and Reinvestment Act of 2009";

(ii) The dollar value and brief description of the project; and

(iii) A detailed written justification as to why the restriction is being waived.

§ 176.90 Non-application to acquisitions covered under international agreements.

Acquisitions covered by international agreements. Section 1605(d) of the Recovery Act provides that the Buy American requirement in section 1605 shall be applied in a manner consistent with U.S. obligations under international agreements.

(a) The Buy American requirement set out in § 176.70 shall not be applied where the iron, steel, or manufactured goods used in the project are from a Party to an international agreement, listed in paragraph (b)(2) of this section, and the recipient is required under an international agreement, described in the appendix to this subpart, to treat the goods and services of that Party the same as domestic goods and services. This obligation shall only apply to projects with an estimated value of $7,443,000 or more and projects that are not specifically excluded from the application of those agreements.

(b) The international agreements that obligate recipients that are covered under an international agreement to treat the goods and services of a Party the same as domestic goods and services and the respective Parties to the agreements are:

(1) The World Trade Organization Government Procurement Agreement (Aruba, Austria, Belgium, Bulgaria, Canada, Cyprus, Czech Republic, Denmark, Estonia, Finland, France, Germany, Greece, Hong Kong, Hungary, Iceland, Ireland, Israel, Italy, Japan, Korea (Republic of), Latvia, Liechtenstein, Lithuania, Luxembourg, Malta, Netherlands, Norway, Poland, Portugal, Romania, Singapore, Slovak Republic, Slovenia, Spain, Sweden, Switzerland, and United Kingdom);

(2) The following Free Trade Agreements:

(i) Dominican Republic-Central America-United States Free Trade Agreement (Costa Rica, Dominican Republic, El Salvador, Guatemala, Honduras, Nicaragua);

(ii) North American Free Trade Agreement (NAFTA) (Canada and Mexico);

(iii) United States-Australia Free Trade Agreement;

(iv) United States-Bahrain Free Trade Agreement;

(v) United States-Chile Free Trade Agreement;

(vi) United States-Israel Free Trade Agreement;

(vii) United States-Morocco Free Trade Agreement;

(viii) United States-Oman Free Trade Agreement;

(ix) United States-Peru Trade Promotion Agreement; and

(x) United States-Singapore Free Trade Agreement.

(3) United States-European Communities Exchange of Letters (May 15, 1995): Austria, Belgium, Bulgaria, Cyprus, Czech Republic, Denmark,

Estonia, Finland, France, Germany, Greece, Hungary, Ireland, Italy, Latvia, Lithuania, Luxembourg, Malta, Netherlands, Poland, Portugal, Romania, Slovak Republic, Slovenia, Spain, Sweden, and United Kingdom.

§ 176.100 Timely determination concerning the inapplicability of section 1605 of the Recovery Act.

(a) The head of the Federal department or agency involved may make a determination regarding inapplicability of section 1605 to a particular case or to a category of cases.

(b) Before Recovery Act funds are awarded by the Federal agency or obligated by the recipient for a project for the construction, alteration, maintenance, or repair of a public building or public work, an applicant or recipient may request from the award official a determination concerning the inapplicability of section 1605 of the Recovery Act for specifically identified items.

(c) The time for submitting the request and the information and supporting data that must be included in the request are to be specified in the agency's and recipient's request for applications and/or proposals, and as appropriate, in other written communications. The content of those communications should be consistent with the notice in § 176.150 or § 176.170, whichever applies.

(d) The award official must evaluate all requests based on the information provided and may supplement this information with other readily available information.

(e) In making a determination based on the increased cost to the project of using domestic iron, steel, and/or manufactured goods, the award official must compare the total estimated cost of the project using foreign iron, steel and/or relevant manufactured goods to the estimated cost if all domestic iron, steel, and/or relevant manufactured goods were used. If use of domestic iron, steel, and/or relevant manufactured goods would increase the cost of the overall project by more than 25 percent, then the award official shall determine that the cost of the domestic iron, steel, and/or relevant manufactured goods is unreasonable.

§ 176.110 Evaluating proposals of foreign iron, steel, and/or manufactured goods.

(a) If the award official receives a request for an exception based on the cost of certain domestic iron, steel, and/or manufactured goods being unreasonable, in accordance with § 176.80, then the award official shall apply evaluation factors to the proposal to use such foreign iron, steel, and/or manufactured goods as follows:

(1) Use an evaluation factor of 25 percent, applied to the total estimated cost of the project, if the foreign iron, steel, and/or manufactured goods are to be used in the project based on an exception for unreasonable cost requested by the applicant.

(2) Total evaluated cost = project cost estimate + (.25 × project cost estimate, if paragraph (a)(1) of this section applies).

(b) Applicants or recipients also may submit alternate proposals based on use of equivalent domestic iron, steel, and/or manufactured goods to avoid possible denial of Recovery Act funding for the proposal if the Federal Government determines that an exception permitting use of the foreign item(s) does not apply.

(c) If the award official makes an award to an applicant that proposed foreign iron, steel, and/or manufactured goods not listed in the applicable notice in the request for applications or proposals, then the award official must add the excepted materials to the list in the award term.

§ 176.120 Determinations on late requests.

(a) If a recipient requests a determination regarding the inapplicability of section 1605 of the Recovery Act after obligating Recovery Act funds for a project for construction, alteration, maintenance, or repair (late request), the recipient must explain why it could not request the determination before making the obligation or why the need for such determination otherwise was not reasonably foreseeable. If the award official concludes that the recipient should have made the request before making the obligation, the award official may deny the request.

(b) The award official must base evaluation of any late request for a determination regarding the inapplicability of section 1605 of the Recovery Act on information required by § 176.150(c) and (d) or § 176.170(c) and (d) and/or other readily available information.

(c) If a determination, under § 176.80 is made after Recovery Act funds were obligated for a project for construction, alteration, maintenance, or repair that an exception to section 1605 of the Recovery Act applies, the award official must amend the award to allow use of the foreign iron, steel, and/or relevant manufactured goods. When the basis of the exception is nonavailability or public interest, the amended award shall reflect adjustment of the award amount, redistribution of budgeted funds, and/or other appropriate actions taken to cover costs associated with acquiring or using the foreign iron, steel, and/or manufactured goods. When the basis for the exception is the unreasonable cost of domestic iron, steel, and/or manufactured goods the award official shall adjust the award amount or the budget, as appropriate, by at least the differential established in § 176.110(a).

§ 176.130 Noncompliance.

The award official must—

(a) Review allegations of violations of section 1605 of the Recovery Act;

(b) Unless fraud is suspected, notify the recipient of the apparent unauthorized use of foreign iron, steel, and/or manufactured goods and request a reply, to include proposed corrective action; and

(c) If the review reveals that a recipient or subrecipient has used foreign iron, steel, and/or manufactured goods without authorization, take appropriate action, including one or more of the following:

(1) Process a determination concerning the inapplicability of section 1605 of the Recovery Act in accordance with § 176.120.

(2) Consider requiring the removal and replacement of the unauthorized foreign iron, steel, and/or manufactured goods.

(3) If removal and replacement of foreign iron, steel, and/or manufactured goods used in a public building or a public work would be impracticable, cause undue delay, or otherwise be detrimental to the interests of the Federal Government, the award official may determine in writing that the foreign iron, steel, and/or manufactured goods need not be removed and replaced. A determination to retain foreign iron, steel, and/or manufactured goods does not constitute a determination that an exception to section 1605 of the Recovery Act applies, and this should be stated in the determination. Further, a determination to retain foreign iron, steel, and/or manufactured goods does not affect the Federal Government's right to reduce the amount of the award by the cost of the steel, iron, or manufactured goods that are used in the project or to take enforcement or termination action in accordance with the agency's grants management regulations.

(4) If the noncompliance is sufficiently serious, consider exercising appropriate remedies, such as withholding cash payments pending correction of the deficiency, suspending or terminating the award, and withholding further awards for the project. Also consider preparing and

forwarding a report to the agency suspending or debarring official in accordance with the agency's debarment rule implementing 2 CFR part 180. If the noncompliance appears to be fraudulent, refer the matter to other appropriate agency officials, such as the officer responsible for criminal investigation.

§ 176.140 Award term—Required Use of American Iron, Steel, and Manufactured Goods—Section 1605 of the American Recovery and Reinvestment Act of 2009.

When awarding Recovery Act funds for construction, alteration, maintenance, or repair of a public building or public work that does not involve iron, steel, and/or manufactured goods covered under international agreements, the agency shall use the award term described in the following paragraphs:

(a) *Definitions.* As used in this award term and condition—

(1) *Manufactured good* means a good brought to the construction site for incorporation into the building or work that has been—

(i) Processed into a specific form and shape; or

(ii) Combined with other raw material to create a material that has different properties than the properties of the individual raw materials.

(2) *Public building and public work* means a public building of, and a public work of, a governmental entity (the United States; the District of Columbia; commonwealths, territories, and minor outlying islands of the United States; State and local governments; and multi-State, regional, or interstate entities which have governmental functions). These buildings and works may include, without limitation, bridges, dams, plants, highways, parkways, streets, subways, tunnels, sewers, mains, power lines, pumping stations, heavy generators, railways, airports, terminals, docks, piers, wharves, ways, lighthouses, buoys, jetties, breakwaters, levees, and canals, and the construction, alteration, maintenance, or repair of such buildings and works.

(3) *Steel* means an alloy that includes at least 50 percent iron, between .02 and 2 percent carbon, and may include other elements.

(b) *Domestic preference.* (1) This award term and condition implements Section 1605 of the American Recovery and Reinvestment Act of 2009 (Recovery Act) (Pub. L. 111–5), by requiring that all iron, steel, and manufactured goods used in the project are produced in the United States except as provided in paragraph (b)(3) and (b)(4) of this section and condition.

(2) This requirement does not apply to the material listed by the Federal Government as follows:

[*Award official to list applicable excepted materials or indicate "none"*]

(3) The award official may add other iron, steel, and/or manufactured goods to the list in paragraph (b)(2) of this section and condition if the Federal Government determines that—

(i) The cost of the domestic iron, steel, and/or manufactured goods would be unreasonable. The cost of domestic iron, steel, or manufactured goods used in the project is unreasonable when the cumulative cost of such material will increase the cost of the overall project by more than 25 percent;

(ii) The iron, steel, and/or manufactured good is not produced, or manufactured in the United States in sufficient and reasonably available quantities and of a satisfactory quality; or

(iii) The application of the restriction of section 1605 of the Recovery Act would be inconsistent with the public interest.

(c) *Request for determination of inapplicability of Section 1605 of the Recovery Act.* (1)(i) Any recipient request to use foreign iron, steel, and/or manufactured goods in accordance with paragraph (b)(3) of this section shall include adequate information for Federal Government evaluation of the request, including—

(A) A description of the foreign and domestic iron, steel, and/or manufactured goods;

(B) Unit of measure;

(C) Quantity;

(D) Cost;

(E) Time of delivery or availability;

(F) Location of the project;

(G) Name and address of the proposed supplier; and

(H) A detailed justification of the reason for use of foreign iron, steel, and/or manufactured goods cited in accordance with paragraph (b)(3) of this section.

(ii) A request based on unreasonable cost shall include a reasonable survey of the market and a completed cost comparison table in the format in paragraph (d) of this section.

(iii) The cost of iron, steel, and/or manufactured goods material shall include all delivery costs to the construction site and any applicable duty.

(iv) Any recipient request for a determination submitted after Recovery Act funds have been obligated for a project for construction, alteration, maintenance, or repair shall explain why the recipient could not reasonably foresee the need for such determination and could not have requested the determination before the funds were obligated. If the recipient does not submit a satisfactory explanation, the award official need not make a determination.

(2) If the Federal Government determines after funds have been obligated for a project for construction, alteration, maintenance, or repair that an exception to section 1605 of the Recovery Act applies, the award official will amend the award to allow use of the foreign iron, steel, and/or relevant manufactured goods. When the basis for the exception is nonavailability or public interest, the amended award shall reflect adjustment of the award amount, redistribution of budgeted funds, and/or other actions taken to cover costs associated with acquiring or using the foreign iron, steel, and/or relevant manufactured goods. When the basis for the exception is the unreasonable cost of the domestic iron, steel, or manufactured goods, the award official shall adjust the award amount or redistribute budgeted funds by at least the differential established in 2 CFR 176.110(a).

(3) Unless the Federal Government determines that an exception to section 1605 of the Recovery Act applies, use of foreign iron, steel, and/or manufactured goods is noncompliant with section 1605 of the American Recovery and Reinvestment Act.

(d) *Data.* To permit evaluation of requests under paragraph (b) of this section based on unreasonable cost, the Recipient shall include the following information and any applicable supporting data based on the survey of suppliers:

FOREIGN AND DOMESTIC ITEMS COST COMPARISON

Description	Unit of measure	Quantity	Cost (dollars)*
Item 1:			
Foreign steel, iron, or manufactured good			
Domestic steel, iron, or manufactured good			
Item 2:			
Foreign steel, iron, or manufactured good			
Domestic steel, iron, or manufactured good			

[List name, address, telephone number, email address, and contact for suppliers surveyed. Attach copy of response; if oral, attach summary.]
[Include other applicable supporting information.]
*[*Include all delivery costs to the construction site.]*

§ 176.150 Notice of Required Use of American Iron, Steel, and Manufactured Goods—Section 1605 of the American Recovery and Reinvestment Act of 2009.

When requesting applications or proposals for Recovery Act programs or activities that may involve construction, alteration, maintenance, or repair of a public building or public work, and do not involve iron, steel, and/or manufactured goods covered under international agreements, the agency shall use the notice described in the following paragraphs in their solicitations:

(a) *Definitions.* Manufactured good, public building and public work, and steel, as used in this notice, are defined in the 2 CFR 176.140.

(b) *Requests for determinations of inapplicability.* A prospective applicant requesting a determination regarding the inapplicability of section 1605 of the American Recovery and Reinvestment Act of 2009 (Pub. L. 111–5) (Recovery Act) should submit the request to the award official in time to allow a determination before submission of applications or proposals. The prospective applicant shall include the information and applicable supporting data required by paragraphs at 2 CFR 176.140(c) and (d) in the request. If an applicant has not requested a determination regarding the inapplicability of 1605 of the Recovery Act before submitting its application or proposal, or has not received a response to a previous request, the applicant shall include the information and supporting data in the application or proposal.

(c) *Evaluation of project proposals.* If the Federal Government determines that an exception based on unreasonable cost of domestic iron, steel, and/or manufactured goods applies, the Federal Government will evaluate a project requesting exception to the requirements of section 1605 of the Recovery Act by adding to the estimated total cost of the project 25 percent of the project cost, if foreign iron, steel, or manufactured goods are used in the project based on unreasonable cost of comparable manufactured domestic iron, steel, and/or manufactured goods.

(d) *Alternate project proposals.* (1) When a project proposal includes foreign iron, steel, and/or manufactured goods not listed by the Federal Government at 2 CFR 176.140(b)(2), the applicant also may submit an alternate proposal based on use of equivalent domestic iron, steel, and/or manufactured goods.

(2) If an alternate proposal is submitted, the applicant shall submit a separate cost comparison table prepared in accordance with 2 CFR 176.140(c) and (d) for the proposal that is based on the use of any foreign iron, steel, and/or manufactured goods for which the Federal Government has not yet determined an exception applies.

(3) If the Federal Government determines that a particular exception requested in accordance with 2 CFR 176.140(b) does not apply, the Federal Government will evaluate only those proposals based on use of the equivalent domestic iron, steel, and/or manufactured goods, and the applicant shall be required to furnish such domestic items.

§ 176.160 Award term—Required Use of American Iron, Steel, and Manufactured Goods (covered under International Agreements)—Section 1605 of the American Recovery and Reinvestment Act of 2009.

When awarding Recovery Act funds for construction, alteration, maintenance, or repair of a public building or public work that involves iron, steel, and/or manufactured goods materials covered under international agreements, the agency shall use the award term described in the following paragraphs:

(a) *Definitions.* As used in this award term and condition—

Designated country—(1) A World Trade Organization Government Procurement Agreement country (Aruba, Austria, Belgium, Bulgaria, Canada, Cyprus, Czech Republic, Denmark, Estonia, Finland, France, Germany, Greece, Hong Kong, Hungary, Iceland, Ireland, Israel, Italy, Japan, Korea (Republic of), Latvia, Liechtenstein, Lithuania, Luxembourg, Malta, Netherlands, Norway, Poland, Portugal, Romania, Singapore, Slovak Republic, Slovenia, Spain, Sweden, Switzerland, and United Kingdom;

(2) A Free Trade Agreement (FTA) country (Australia, Bahrain, Canada, Chile, Costa Rica, Dominican Republic, El Salvador, Guatemala, Honduras, Israel, Mexico, Morocco, Nicaragua, Oman, Peru, or Singapore); or

(3) A United States-European Communities Exchange of Letters (May 15, 1995) country: Austria, Belgium, Bulgaria, Cyprus, Czech Republic, Denmark, Estonia, Finland, France, Germany, Greece, Hungary, Ireland, Italy, Latvia, Lithuania, Luxembourg, Malta, Netherlands, Poland, Portugal, Romania, Slovak Republic, Slovenia, Spain, Sweden, and United Kingdom.

Designated country iron, steel, and/or manufactured goods—(1) Is wholly the growth, product, or manufacture of a designated country; or

(2) In the case of a manufactured good that consist in whole or in part of materials from another country, has been substantially transformed in a designated country into a new and different manufactured good distinct from the materials from which it was transformed.

Domestic iron, steel, and/or manufactured good—(1) Is wholly the growth, product, or manufacture of the United States; or

(2) In the case of a manufactured good that consists in whole or in part of materials from another country, has been substantially transformed in the United States into a new and different manufactured good distinct from the materials from which it was transformed. There is no requirement with regard to the origin of components or subcomponents in manufactured goods or products, as long as the manufacture of the goods occurs in the United States.

Foreign iron, steel, and/or manufactured good means iron, steel

and/or manufactured good that is not domestic or designated country iron, steel, and/or manufactured good.

Manufactured good means a good brought to the construction site for incorporation into the building or work that has been—

(1) Processed into a specific form and shape; or

(2) Combined with other raw material to create a material that has different properties than the properties of the individual raw materials.

Public building and *public work* means a public building of, and a public work of, a governmental entity (the United States; the District of Columbia; commonwealths, territories, and minor outlying islands of the United States; State and local governments; and multi-State, regional, or interstate entities which have governmental functions). These buildings and works may include, without limitation, bridges, dams, plants, highways, parkways, streets, subways, tunnels, sewers, mains, power lines, pumping stations, heavy generators, railways, airports, terminals, docks, piers, wharves, ways, lighthouses, buoys, jetties, breakwaters, levees, and canals, and the construction, alteration, maintenance, or repair of such buildings and works.

Steel means an alloy that includes at least 50 percent iron, between .02 and 2 percent carbon, and may include other elements.

(b) *Iron, steel, and manufactured goods.* (1) The award term and condition described in this section implements—

(i) Section 1605(a) of the American Recovery and Reinvestment Act of 2009 (Pub. L. 111–5) (Recovery Act), by requiring that all iron, steel, and manufactured goods used in the project are produced in the United States; and

(ii) Section 1605(d), which requires application of the Buy American requirement in a manner consistent with U.S. obligations under international agreements. The restrictions of section 1605 of the Recovery Act do not apply to designated country iron, steel, and/or manufactured goods. The Buy American requirement in section 1605 shall not be applied where the iron, steel or manufactured goods used in the project are from a Party to an international agreement that obligates the recipient to treat the goods and services of that Party the same as domestic goods and services. This obligation shall only apply to projects with an estimated value of $7,443,000 or more.

(2) The recipient shall use only domestic or designated country iron, steel, and manufactured goods in performing the work funded in whole or part with this award, except as provided in paragraphs (b)(3) and (b)(4) of this section.

(3) The requirement in paragraph (b)(2) of this section does not apply to the iron, steel, and manufactured goods listed by the Federal Government as follows:

[*Award official to list applicable excepted materials or indicate "none"*]

(4) The award official may add other iron, steel, and manufactured goods to the list in paragraph (b)(3) of this section if the Federal Government determines that—

(i) The cost of domestic iron, steel, and/or manufactured goods would be unreasonable. The cost of domestic iron, steel, and/or manufactured goods used in the project is unreasonable when the cumulative cost of such material will increase the overall cost of the project by more than 25 percent;

(ii) The iron, steel, and/or manufactured good is not produced, or manufactured in the United States in sufficient and reasonably available commercial quantities of a satisfactory quality; or

(iii) The application of the restriction of section 1605 of the Recovery Act would be inconsistent with the public interest.

(c) *Request for determination of inapplicability of section 1605 of the Recovery Act or the Buy American Act.* (1)(i) Any recipient request to use foreign iron, steel, and/or manufactured goods in accordance with paragraph (b)(4) of this section shall include adequate information for Federal Government evaluation of the request, including—

(A) A description of the foreign and domestic iron, steel, and/or manufactured goods;

(B) Unit of measure;

(C) Quantity;

(D) Cost;

(E) Time of delivery or availability;

(F) Location of the project;

(G) Name and address of the proposed supplier; and

(H) A detailed justification of the reason for use of foreign iron, steel, and/or manufactured goods cited in accordance with paragraph (b)(4) of this section.

(ii) A request based on unreasonable cost shall include a reasonable survey of the market and a completed cost comparison table in the format in paragraph (d) of this section.

(iii) The cost of iron, steel, or manufactured goods shall include all delivery costs to the construction site and any applicable duty.

(iv) Any recipient request for a determination submitted after Recovery Act funds have been obligated for a project for construction, alteration, maintenance, or repair shall explain why the recipient could not reasonably foresee the need for such determination and could not have requested the determination before the funds were obligated. If the recipient does not submit a satisfactory explanation, the award official need not make a determination.

(2) If the Federal Government determines after funds have been obligated for a project for construction, alteration, maintenance, or repair that an exception to section 1605 of the Recovery Act applies, the award official will amend the award to allow use of the foreign iron, steel, and/or relevant manufactured goods. When the basis for the exception is nonavailability or public interest, the amended award shall reflect adjustment of the award amount, redistribution of budgeted funds, and/or other appropriate actions taken to cover costs associated with acquiring or using the foreign iron, steel, and/or relevant manufactured goods.. When the basis for the exception is the unreasonable cost of the domestic iron, steel, or manufactured goods, the award official shall adjust the award amount or redistribute budgeted funds, as appropriate, by at least the differential established in 2 CFR 176.110(a).

(3) Unless the Federal Government determines that an exception to section 1605 of the Recovery Act applies, use of foreign iron, steel, and/or manufactured goods other than designated country iron, steel, and/or manufactured goods is noncompliant with the applicable Act.

(d) *Data.* To permit evaluation of requests under paragraph (b) of this section based on unreasonable cost, the applicant shall include the following information and any applicable supporting data based on the survey of suppliers:

FOREIGN AND DOMESTIC ITEMS COST COMPARISON

Description	Unit of measure	Quantity	Cost (dollars)*
Item 1:			
Foreign steel, iron, or manufactured good	_____	_____	_____
Domestic steel, iron, or manufactured good	_____	_____	_____
Item 2:			
Foreign steel, iron, or manufactured good	_____	_____	_____
Domestic steel, iron, or manufactured good	_____	_____	_____

[List name, address, telephone number, email address, and contact for suppliers surveyed. Attach copy of response; if oral, attach summary.]
[Include other applicable supporting information.]
*[*Include all delivery costs to the construction site.]*

§ 176.170 Notice of Required Use of American Iron, Steel, and Manufactured Goods (covered under International Agreements)—Section 1605 of the American Recovery and Reinvestment Act of 2009.

When requesting applications or proposals for Recovery Act programs or activities that may involve construction, alteration, maintenance, or repair of a public building or public work, and involve iron, steel, and/or manufactured goods covered under international agreements, the agency shall use the notice described in the following paragraphs in the solicitation:

(a) *Definitions. Designated country iron, steel, and/or manufactured goods, foreign iron, steel, and/or manufactured good, manufactured good, public building* and *public work*, and *steel*, as used in this provision, are defined in 2 CFR 176.160(a).

(b) *Requests for determinations of inapplicability.* A prospective applicant requesting a determination regarding the inapplicability of section 1605 of the American Recovery and Reinvestment Act of 2009 (Pub. L. 111–5) (Recovery Act) should submit the request to the award official in time to allow a determination before submission of applications or proposals. The prospective applicant shall include the information and applicable supporting data required by 2 CFR 176.160 (c) and (d) in the request. If an applicant has not requested a determination regarding the inapplicability of section 1605 of the Recovery Act before submitting its application or proposal, or has not received a response to a previous request, the applicant shall include the information and supporting data in the application or proposal.

(c) *Evaluation of project proposals.* If the Federal Government determines that an exception based on unreasonable cost of domestic iron, steel, and/or manufactured goods applies, the Federal Government will evaluate a project requesting exception to the requirements of section 1605 of the Recovery Act by adding to the estimated total cost of the project 25 percent of the project cost if foreign iron, steel, or manufactured goods are used based on unreasonable cost of comparable domestic iron, steel, or manufactured goods.

(d) *Alternate project proposals.* (1) When a project proposal includes foreign iron, steel, and/or manufactured goods, other than designated country iron, steel, and/or manufactured goods, that are not listed by the Federal Government in this Buy American notice in the request for applications or proposals, the applicant may submit an alternate proposal based on use of equivalent domestic or designated country iron, steel, and/or manufactured goods.

(2) If an alternate proposal is submitted, the applicant shall submit a separate cost comparison table prepared in accordance with paragraphs 2 CFR 176.160(c) and (d) for the proposal that is based on the use of any foreign iron, steel, and/or manufactured goods for which the Federal Government has not yet determined an exception applies.

(3) If the Federal Government determines that a particular exception requested in accordance with 2 CFR 176.160(b) does not apply, the Federal Government will evaluate only those proposals based on use of the equivalent domestic or designated country iron, steel, and/or manufactured goods, and the applicant shall be required to furnish such domestic or designated country items.

Appendix to Subpart B of Part 176—U.S. States, Other Sub-Federal Entities, and Other Entities Subject to U.S. Obligations Under International Agreements

States	Entities covered	Exclusions	Relevant international agreements
Arizona	Executive branch agencies		—WTO GPA (except Canada). —U.S.-Chile FTA. —U.S.-Singapore FTA.
Arkansas	Executive branch agencies, including universities but excluding the Office of Fish and Game.	construction services	—WTO GPA (except Canada). —DR–CAFTA. —U.S.-Australia FTA. —U.S.-Chile FTA. —U.S.-Morocco FTA. —US.-Peru TPA. —U.S.-Singapore FTA.
California	Executive branch agencies		—WTO GPA (except Canada). —U.S.-Australia FTA. —U.S.-Chile FTA. —U.S.-Singapore FTA.
Colorado	Executive branch agencies		—WTO GPA (except Canada). —DR–CAFTA. —U.S.-Australia FTA. —U.S.-Chile FTA. —U.S.-Morocco FTA. —U.S.-Peru TPA.

States	Entities covered	Exclusions	Relevant international agreements
Connecticut	—Department of Administrative Services. —Department of Transportation. —Department of Public Works. —Constituent Units of Higher Education.		—U.S.-Singapore FTA. —WTO GPA (except Canada). —DR–CAFTA. —U.S.-Australia FTA. —U.S.-Chile FTA. —U.S.-Morocco FTA. —U.S.-Singapore FTA.
Delaware	—Administrative Services (Central Procurement Agency). —State Universities. —State Colleges.	construction-grade steel (including requirements on subcontracts); motor vehicles; coal.	—WTO GPA (except Canada). —DR–CAFTA (except Honduras). —U.S.-Australia FTA. —U.S.-Chile FTA. —U.S.-Morocco FTA. —U.S.-Singapore FTA.
Florida	Executive branch agencies	construction-grade steel (including requirements on subcontracts); motor vehicles; coal.	—WTO GPA (except Canada). —DR–CAFTA. —U.S.-Australia FTA. —U.S.-Chile FTA. —U.S.-Morocco FTA. —U.S.-Peru TPA. —U.S.-Singapore FTA.
Georgia	—Department of Administrative Services —Georgia Technology Authority.	beef; compost; mulch	—U.S.-Australia FTA.
Hawaii	Department of Accounting and General Services.	software developed in the state; construction.	—WTO GPA (except Canada). —DR–CAFTA (except Honduras). —U.S.-Australia FTA. —U.S.-Chile FTA. —U.S.-Morocco FTA. —U.S.-Singapore FTA.
Idaho	Central Procurement Agency (including all colleges and universities subject to central purchasing oversight).		—WTO GPA (except Canada). —DR–CAFTA (except Honduras). —U.S.-Australia FTA. —U.S.-Chile FTA. —U.S.-Morocco FTA. —U.S.-Singapore FTA.
Illinois	—Department of Central Management Services.	construction-grade steel (including requirements on subcontracts); motor vehicles; coal.	—WTO GPA (except Canada). —U.S.-Australia FTA. —U.S.-Chile FTA. —U.S.-Peru TPA. —U.S.-Singapore FTA. —U.S.-EC Exchange of Letters (applies to EC Member States for procurement not covered by WTO GPA and only where the state considers out-of-state suppliers).
Iowa	—Department of General Services —Department of Transportation. —Board of Regents' Institutions (universities).	construction-grade steel (including requirements on subcontracts); motor vehicles; coal.	—WTO GPA (except Canada). —U.S.-Chile FTA. —U.S.-Singapore FTA.
Kansas	Executive branch agencies	construction services; automobiles; aircraft.	—WTO GPA (except Canada). —U.S.-Australia FTA. —U.S.-Chile FTA. —U.S.-Morocco FTA. —U.S.-Singapore FTA.
Kentucky	Division of Purchases, Finance and Administration Cabinet.	construction projects	—WTO GPA (except Canada). —DR–CAFTA. —U.S.-Australia FTA. —U.S.-Chile FTA. —U.S.-Morocco FTA. —U.S.-Singapore FTA.
Louisiana	Executive branch agencies		—WTO GPA (except Canada). —DR–CAFTA. —U.S.-Australia FTA. —U.S.-Chile FTA. —U.S.-Morocco FTA. —U.S.-Singapore FTA.

States	Entities covered	Exclusions	Relevant international agreements
Maine	—Department of Administrative and Financial Services. —Bureau of General Services (covering state government agencies and school construction). —Department of Transportation.	construction-grade steel (including requirements on subcontracts); motor vehicles; coal.	—WTO GPA (except Canada). —U.S.-Australia FTA. —U.S.-Chile FTA. —U.S.-Singapore FTA.
Maryland	—Office of the Treasury. —Department of the Environment. —Department of General Services. —Department of Housing and Community Development. —Department of Human Resources. —Department of Licensing and Regulation. —Department of Natural Resources. —Department of Public Safety and Correctional Services. —Department of Personnel. —Department of Transportation.	construction-grade steel (including requirements on subcontracts); motor vehicles; coal.	—WTO GPA (except Canada). —DR–CAFTA. —U.S.-Australia FTA. —U.S.-Chile FTA. —U.S.-Morocco FTA. —U.S.-Singapore FTA.
Massachusetts	—Executive Office for Administration and Finance. —Executive Office of Communities and Development. —Executive Office of Consumer Affairs. —Executive Office of Economic Affairs. —Executive Office of Education. —Executive Office of Elder Affairs. —Executive Office of Environmental Affairs. —Executive Office of Health and Human Service. —Executive Office of Labor. —Executive Office of Public Safety. —Executive Office of Transportation and Construction.		—WTO GPA (except Canada). —U.S.-Chile FTA. —U.S.-Singapore FTA.
Michigan	Department of Management and Budget.	construction-grade steel (including requirements on subcontracts); motor vehicles; coal.	—WTO GPA (except Canada). —U.S.-Australia FTA. —U.S.-Chile FTA. —U.S.-Singapore FTA.
Minnesota	Executive branch agencies		—WTO GPA (except Canada). —U.S.-Chile FTA. —U.S.-Singapore FTA.
Mississippi	Department of Finance and Administration.	services	—WTO GPA (except Canada). —DR–CAFTA. —U.S.-Australia FTA. —U.S.-Chile FTA. —U.S.-Morocco FTA. —U.S.-Peru TPA. —U.S.-Singapore FTA.
Missouri	—Office of Administration —Division of Purchasing and Materials Management.		—WTO GPA (except Canada). —U.S.-Chile FTA. —U.S.-Singapore FTA.
Montana	Executive branch agencies	goods	—WTO GPA (except Canada). —U.S.-Chile FTA. —U.S.-Singapore FTA.
Nebraska	Central Procurement Agency		—WTO GPA (except Canada). —DR–CAFTA. —U.S.-Australia FTA. —U.S.-Chile FTA. —U.S.-Morocco FTA. —U.S.-Singapore FTA.
New Hampshire	Central Procurement Agency	construction-grade steel (including requirements on subcontracts), motor vehicles; coal.	—WTO GPA (except Canada). —DR–CAFTA. —U.S.-Australia FTA. —U.S.-Chile FTA. —U.S.-Morocco FTA. —U.S.-Singapore FTA.

States	Entities covered	Exclusions	Relevant international agreements
New York	—State agencies. —State university system. —Public authorities and public benefit corporations, with the exception of those entities with multi-state mandates.	construction-grade steel (including requirements on subcontracts); motor vehicles; coal; transit cars, buses and related equipment.	—WTO GPA (except Canada). —DR–CAFTA. —U.S.-Australia FTA. —U.S.-Chile FTA. —U.S.-Morocco FTA. —U.S.-Peru TPA. —U.S.-Singapore FTA.
North Dakota			—U.S.-EC Exchange of Letters (applies to EC Member States and only where the state considers out-of-state suppliers).
Oklahoma	Department of Central Services and all state agencies and departments subject to the Oklahoma Central Purchasing Act.	construction services; construction-grade steel (including requirements on subcontracts); motor vehicles; coal.	—WTO GPA (except Canada). —U.S.-Australia FTA. —U.S.-Chile FTA. —U.S.-Peru TPA. —U.S.-Singapore FTA.
Oregon	Department of Administrative Services.		—WTO GPA (except Canada). —DR–CAFTA (except Honduras). —U.S.-Australia FTA. —U.S.-Chile FTA. —U.S.-Morocco FTA. —U.S.-Singapore FTA.
Pennsylvania	Executive branch agencies, including: —Governor's Office. —Department of the Auditor General. —Treasury Department. —Department of Agriculture. —Department of Banking. —Pennsylvania Securities Commission. —Department of Health. —Department of Transportation. —Insurance Department. —Department of Aging. —Department of Correction. —Department of Labor and Industry. —Department of Military Affairs. —Office of Attorney General. —Department of General Services. —Department of Education. —Public Utility Commission. —Department of Revenue. —Department of State. —Pennsylvania State Police. —Department of Public Welfare. —Fish Commission. —Game Commission. —Department of Commerce. —Board of Probation and Parole. —Liquor Control Board. —Milk Marketing Board. —Lieutenant Governor's Office. —Department of Community Affairs. —Pennsylvania Historical and Museum Commission. —Pennsylvania Emergency Management Agency. —State Civil Service Commission. —Pennsylvania Public Television Network. —Department of Environmental Resources. —State Tax Equalization Board. —Department of Public Welfare. —State Employees' Retirement System. —Pennsylvania Municipal Retirement Board.	construction-grade steel (including requirements on subcontracts); motor vehicles; coal.	—WTO GPA (except Canada). —U.S.-Australia FTA. —U.S.-Chile FTA. —U.S.-Singapore FTA.

States	Entities covered	Exclusions	Relevant international agreements
	—Public School Employees' Retirement System. —Pennsylvania Crime Commission. —Executive Offices.		
Rhode Island	Executive branch agencies	boats, automobiles, buses and related equipment.	—WTO GPA (except Canada). —DR–CAFTA (except Honduras). —U.S.-Australia FTA. —U.S.-Chile FTA. —U.S.-Morocco FTA. —U.S.-Singapore FTA.
South Dakota	Central Procuring Agency (including universities and penal institutions).	beef	—WTO GPA (except Canada). —DR–CAFTA. —U.S.-Australia FTA. —U.S.-Chile FTA. —U.S.-Morocco FTA. —U.S.-Singapore FTA.
Tennessee	Executive branch agencies	Services; construction	—WTO GPA (except Canada). —U.S.-Australia FTA. —U.S.-Chile FTA. —U.S.-Singapore FTA.
Texas	Texas Building and Procurement Commission.		—WTO GPA (except Canada). —DR–CAFTA. —U.S.-Australia FTA. —U.S.-Chile FTA. —U.S.-Morocco FTA. —U.S.-Peru TPA. —U.S.-Singapore FTA.
Utah	Executive branch agencies		—WTO GPA (except Canada). —DR–CAFTA (except Honduras). —U.S.-Australia FTA. —U.S.-Chile FTA. —U.S.-Morocco FTA. —U.S.-Peru TPA. —U.S.-Singapore FTA.
Vermont	Executive branch agencies		—WTO GPA (except Canada). —DR–CAFTA. —U.S.-Australia FTA. —U.S.-Chile FTA. —U.S.-Morocco FTA. —U.S.-Singapore FTA.
Washington	Executive branch agencies, including: —General Administration. —Department of Transportation. —State Universities.	fuel; paper products; boats; ships; and vessels.	—WTO GPA (except Canada). —DR–CAFTA. —U.S.-Australia FTA. —U.S.-Chile FTA. —U.S.-Morocco FTA. —U.S.-Singapore FTA.
West Virginia			—U.S.-EC Exchange of Letters (applies to EC Member States and only where the state considers out-of-state suppliers).
Wisconsin	Executive branch agencies, including: —Department of Administration. —State Correctional Institutions. —Department of Development. —Educational Communications Board. —Department of Employment Relations. —State Historical Society. —Department of Health and Social Services. —Insurance Commissioner. —Department of Justice. —Lottery Board. —Department of Natural Resources. —Administration for Public Instruction.		—WTO GPA (except Canada). —U.S.-Chile FTA. —U.S.-Singapore FTA.

States	Entities covered	Exclusions	Relevant international agreements
Wyoming	—Racing Board. —Department of Revenue. —State Fair Park Board. —Department of Transportation. —State University System. —Procurement Services Division —Wyoming Department of Transportation. —University of Wyoming	construction-grade steel (including requirements on subcontracts); motor vehicles; coal.	—WTO GPA (except Canada). —DR–CAFTA. —U.S.-Australia FTA. —U.S.-Chile FTA. —U.S.-Morocco FTA. —U.S.-Singapore FTA.
Other sub-federal entities	**Entities covered**	**Exclusions**	**Relevant international agreements**
Puerto Rico	—Department of State —Department of Justice. —Department of the Treasury. —Department of Economic Development and Commerce. —Department of Labor and Human Resources. —Department of Natural and Environmental Resources. —Department of Consumer Affairs. —Department of Sports and Recreation.	construction services	—DR–CAFTA. —U.S.-Peru TPA.
Port Authority of New York and New Jersey.		restrictions attached to Federal funds for airport projects; maintenance, repair and operating materials and supplies.	—WTO GPA (except Canada). —U.S.-Chile FTA. —U.S.-Singapore FTA.
Port of Baltimore		restrictions attached to Federal funds for airport projects.	—WTO GPA (except Canada). —U.S.-Chile FTA. —U.S.-Singapore FTA.
New York Power Authority		restrictions attached to Federal funds for airport projects; conditions specified for the State of New York.	—WTO GPA (except Canada). —U.S.-Chile FTA. —U.S.-Singapore FTA.
Massachusetts Port Authority			U.S.-EC Exchange of Letters (applies to EC Member States and only where the Port Authority considers out-of-state suppliers).
Boston, Chicago, Dallas, Detroit, Indianapolis, Nashville, and San Antonio.			U.S.-EC Exchange of Letters (only applies to EC Member States and where the city considers out-of-city suppliers).
Other entities	**Entities covered**	**Exclusions**	**Relevant international agreements**
Rural Utilities Service (waiver of Buy American restriction on financing for all power generation projects).			—WTO GPA. —DR–CAFTA. —NAFTA. —U.S.-Australia FTA. —U.S.-Bahrain FTA. —U.S.-Chile FTA. —U.S.-Morocco FTA. —U.S.-Oman FTA. —U.S.-Peru TPA. —U.S.-Singapore FTA.
Rural Utilities Service (waiver of Buy American restriction on financing for telecommunications projects).			—NAFTA. —U.S.-Israel FTA.

General Exceptions: The following restrictions and exceptions are excluded from U.S. obligations under international agreements:

1. The restrictions attached to Federal funds to states for mass transit and highway projects.

2. Dredging.

The World Trade Organization Government Procurement Agreement (WTO GPA) Parties: Aruba, Austria, Canada, Belgium, Bulgaria, Cyprus, Czech Republic, Denmark, Estonia, Finland, France, Germany, Greece, Hong Kong, Hungary, Iceland, Ireland, Israel, Italy, Japan, Korea (Republic of), Latvia, Liechtenstein, Lithuania,

Luxembourg, Malta, Netherlands, Norway, Poland, Portugal, Romania, Singapore, Slovak Republic, Slovenia, Spain, Sweden, Switzerland, and United Kingdom.

The Free Trade Agreements and the respective Parties to the agreements are:

(1) Dominican Republic-Central America-United States Free Trade Agreement (DR-CAFTA): Costa Rica, Dominican Republic, El Salvador, Guatemala, Honduras, and Nicaragua;

(2) North American Free Trade Agreement (NAFTA): Canada and Mexico;

(3) United States-Australia Free Trade Agreement (U.S.-Australia FTA);

(4) United States-Bahrain Free Trade Agreement (U.S.-Bahrain FTA);

(5) United States-Chile Free Trade Agreement (U.S.-Chile FTA);

(6) United States-Israel Free Trade Agreement (U.S.-Israel FTA);

(7) United States-Morocco Free Trade Agreement (U.S.-Morocco FTA);

(8) United States-Oman Free Trade Agreement (U.S.-Oman FTA);

(9) United States-Peru Trade Promotion Agreement (U.S.-Peru TPA); and

(10) United States-Singapore Free Trade Agreement (U.S.-Singapore FTA).

United States-European Communities Exchange of Letters (May 30, 1995) (U.S.-EC Exchange of Letters) applies to EC Member States: Austria, Belgium, Bulgaria, Cyprus, Czech Republic, Denmark, Estonia, Finland, France, Germany, Greece, Hungary, Ireland, Italy, Latvia, Lithuania, Luxembourg, Malta, Netherlands, Poland, Portugal, Romania, Slovak Republic, Slovenia, Spain, Sweden, and United Kingdom.

Subpart C—Wage Rate Requirements Under Section 1606 of the American Recovery and Reinvestment Act of 2009

§ 176.180 Procedure.

The award official shall insert the standard award term in this Subpart in all awards funded in whole or in part with Recovery Act funds.

§ 176.190 Award term—Wage Rate Requirements under Section 1606 of the Recovery Act.

When issuing announcements or requesting applications for Recovery Act programs or activities that may involve construction, alteration, maintenance, or repair the agency shall use the award term described in the following paragraphs:

(a) Section 1606 of the Recovery Act requires that all laborers and mechanics employed by contractors and subcontractors on projects funded directly by or assisted in whole or in part by and through the Federal Government pursuant to the Recovery Act shall be paid wages at rates not less than those prevailing on projects of a character similar in the locality as determined by the Secretary of Labor in accordance with subchapter IV of chapter 31 of title 40, United States Code.

Pursuant to Reorganization Plan No. 14 and the Copeland Act, 40 U.S.C. 3145, the Department of Labor has issued regulations at 29 CFR parts 1, 3, and 5 to implement the Davis-Bacon and related Acts. Regulations in 29 CFR 5.5 instruct agencies concerning application of the standard Davis-Bacon contract clauses set forth in that section. Federal agencies providing grants, cooperative agreements, and loans under the Recovery Act shall ensure that the standard Davis-Bacon contract clauses found in 29 CFR 5.5(a) are incorporated in any resultant covered contracts that are in excess of $2,000 for construction, alteration or repair (including painting and decorating).

(b) For additional guidance on the wage rate requirements of section 1606, contact your awarding agency. Recipients of grants, cooperative agreements and loans should direct their initial inquiries concerning the application of Davis-Bacon requirements to a particular federally assisted project to the Federal agency funding the project. The Secretary of Labor retains final coverage authority under Reorganization Plan Number 14.

Subpart D—Single Audit Information for Recipients of Recovery Act Funds

§ 176.200 Procedure.

The award official shall insert the standard award term in this Subpart in all awards funded in whole or in part with Recovery Act funds.

§ 176.210 Award term—Recovery Act Transactions listed in Schedule of Expenditures of Federal Awards and Recipient Responsibilities for Informing Subrecipients.

The award term described in this section shall be used by agencies to clarify recipient responsibilities regarding tracking and documenting Recovery Act expenditures:

(a) To maximize the transparency and accountability of funds authorized under the American Recovery and Reinvestment Act of 2009 (Pub. L. 111-5) (Recovery Act) as required by Congress and in accordance with 2 CFR 215.21 "Uniform Administrative Requirements for Grants and Agreements" and OMB Circular A-102 Common Rules provisions, recipients agree to maintain records that identify adequately the source and application of Recovery Act funds. OMB Circular A-102 is available at *http://www.whitehouse.gov/omb/circulars/a102/a102.html*.

(b) For recipients covered by the Single Audit Act Amendments of 1996 and OMB Circular A-133, "Audits of States, Local Governments, and Non-Profit Organizations," recipients agree to separately identify the expenditures for Federal awards under the Recovery Act on the Schedule of Expenditures of Federal Awards (SEFA) and the Data Collection Form (SF-SAC) required by OMB Circular A-133. OMB Circular A-133 is available at *http://www.whitehouse.gov/omb/circulars/a133/a133.html*. This shall be accomplished by identifying expenditures for Federal awards made under the Recovery Act separately on the SEFA, and as separate rows under Item 9 of Part III on the SF-SAC by CFDA number, and inclusion of the prefix "ARRA-" in identifying the name of the Federal program on the SEFA and as the first characters in Item 9d of Part III on the SF-SAC.

(c) Recipients agree to separately identify to each subrecipient, and document at the time of subaward and at the time of disbursement of funds, the Federal award number, CFDA number, and amount of Recovery Act funds. When a recipient awards Recovery Act funds for an existing program, the information furnished to subrecipients shall distinguish the subawards of incremental Recovery Act funds from regular subawards under the existing program.

(d) Recipients agree to require their subrecipients to include on their SEFA information to specifically identify Recovery Act funding similar to the requirements for the recipient SEFA described above. This information is needed to allow the recipient to properly monitor subrecipient expenditure of ARRA funds as well as oversight by the Federal awarding agencies, Offices of Inspector General and the Government Accountability Office.

[FR Doc. E9-9073 Filed 4-22-09; 8:45 am]
BILLING CODE P

DEPARTMENT OF AGRICULTURE

Agricultural Marketing Service

7 CFR Part 984

[Doc. No. AO-192-A7; AMS-FV-07-0004; FV06-984-1 C]

Walnuts Grown in California; Order Amending Marketing Order No. 984; Correcting Amendment

AGENCY: Agricultural Marketing Service, USDA.

ACTION: Final rule; correcting amendment.

SUPPLEMENTAL AGREEMENT

TO THE

AGREEMENT FOR PROFESSIONAL SERVICES

BETWEEN THE

CITY OF HATTIESBURG

AND

NEEL-SCHAFFER, INC.

SHARED-USE PATHWAY FROM NEWMAN-BUSCHMAN NEIGHBORHOOD TO CHAIN PARK

PROJECT NO. 8933

THIS IS AN AMENDMENT made on February 21, 2012, to the Prime Agreement for Professional Services (Prime Agreement) between the **CITY OF HATTIESBURG**, P. O. Box 1898, Hattiesburg, Mississippi 39403-1898 **(OWNER)** and **NEEL-SCHAFFER, INC.**, 704 Hardy Street, Hattiesburg, Mississippi 39401 **(ENGINEER)** executed on February 21, 2012 for Design Phase Services, Railroad Permit Services, and Resident Project Representation Services on the Shared-use Pathway from Newman-Buschman to Chain Park Project.

1. The **ENGINEER** and **OWNER** hereby agree to the following changes and amendments to the Prime Agreement as requested by the Owner:

   a) Include Exhibit G:

   b) Include Rules and Regulations from Federal Register Volume 74, Number 77 dated April 23, 2009:

2. The **ENGINEER** and **OWNER** hereby agree to the following changes and amendments to the Prime Agreement,

IN WITNESS WHEREOF, the parties hereto have made and executed this **Agreement** as of the day and year first written above.

OWNER: CITY OF HATTIESBURG

WITNESS:

ENGINEER: NEEL-SCHAFFER, INC.

WITNESS:

EXHIBIT G

Both the City of Hattiesburg and Neel-Schaffer, Inc. acknowledge the requirements of 2 CFR Part 176 as the project includes ARRA funding sources.

Rules and Regulations

Federal Register
Vol. 74, No. 77
Thursday, April 23, 2009

This section of the FEDERAL REGISTER contains regulatory documents having general applicability and legal effect, most of which are keyed to and codified in the Code of Federal Regulations, which is published under 50 titles pursuant to 44 U.S.C. 1510.

The Code of Federal Regulations is sold by the Superintendent of Documents. Prices of new books are listed in the first FEDERAL REGISTER issue of each week.

OFFICE OF MANAGEMENT AND BUDGET

2 CFR Part 176

Requirements for Implementing Sections 1512, 1605, and 1606 of the American Recovery and Reinvestment Act of 2009 for Financial Assistance Awards

AGENCY: Office of Federal Financial Management, Office of Management and Budget (OMB).

ACTION: Interim final guidance.

SUMMARY: The Office of Federal Financial Management (OFFM) is establishing Governmentwide guidance and standard award terms for agencies to include in financial assistance awards (namely, grants, cooperative agreements, and loans) as part of their implementation of sections 1512, and 1605, and 1606 of the American Recovery and Reinvestment Act of 2009 (Pub. L. 111–5). This guidance does not cover all award terms that may be needed on financial assistance awards funded directly or assisted by the Federal Government under the Recovery Act. The focus of this guidance is on implementing Recovery Act provisions that may require greater clarification in order to foster consistent application across the Federal Government. Under the interim final guidance, agencies would use the standard award terms in their financial assistance awards to require recipients and subrecipients (first-tier that are not individuals) to maintain current registrations in the Central Contractor Registration (CCR) database; to require recipients to report quarterly on project or activity status, subgrant and subcontract information; to notify recipients of the domestic sourcing ("Buy American") requirements that apply to certain iron, steel and manufactured goods; to notify recipients of the wage rate requirements that apply to certain projects; and to ensure proper accounting and reporting of Recovery Act expenditures in single audits.

DATES: This document is effective April 23, 2009. To be considered in preparation of the final guidance, comments on the interim final guidance must be received by no later than June 22, 2009.

ADDRESSES: Due to potential delays in OMB's receipt and processing of mail sent through the U.S. Postal Service, we encourage respondents to submit comments electronically to ensure timely receipt. We cannot guarantee that comments mailed will be received before the comment closing date.

Comments may be sent to via *http://www.regulations.gov*—a Federal E-Government Web site that allows the public to find, review, and submit comments on documents that agencies have published in the **Federal Register** and that are open for comment. Simply type "Recovery Act Guidance" (in quotes) in the Comment or Submission search box, click Go, and follow the instructions for submitting comments. Comments received by the date specified above will be included as part of the official record.

Electronic mail comments may also be submitted to: Marguerite Pridgen at *mpridgen@omb.eop.gov*. Please include "Recovery Act Guidance" in the subject line and the full body of your comments in the text of the electronic message and not as an attachment. Please include your name, title, organization, postal address, telephone number, and e-mail address in the text of the message. Comments may also be submitted via facsimile to (202) 395–3952.

Comments may be mailed to Marguerite Pridgen, Office of Federal Financial Management, Office of Management and Budget, Room 6025, New Executive Office Building, Washington, DC 20503.

All responses will be summarized and included in the request for OMB approval.

FOR FURTHER INFORMATION CONTACT: Marguerite Pridgen, Office of Federal Financial Management, Office of Management and Budget, telephone (202) 395–7844 (direct) or (202) 395–3993 (main office) and e-mail: *Marguerite_E._Pridgen@omb.eop.gov.*

SUPPLEMENTARY INFORMATION:

I. Background

A. Section 1512(c) of the American Recovery and Reinvestment Act of 2009 (Pub. L. 111–5, hereafter referred to as "the Recovery Act" or "the Act") requires, as a condition of receipt of funds, quarterly reporting on the use of funds. The data elements proposed for reporting the information described in section 1512(c) were published in the **Federal Register** on April 1, 2009 [74 FR 14824]. An entity that receives assistance funding under the Recovery Act must report information including, but not limited to,

i. The total amount of recovery funds received from that agency;

ii. The amount of recovery funds received that were expended or obligated to projects or activities; and

iii. A detailed list of all projects or activities for which recovery funds were expended or obligated, including—

1. The name of the project or activity;
2. A description of the project or activity;
3. An evaluation of the completion status of the project or activity;
4. An estimate of the number of jobs created and the number of jobs retained by the project or activity; and
5. For infrastructure investments made by State and local governments, the purpose, total cost, and rationale of the agency for funding the infrastructure investment with funds made available under this Act, and name of the person to contact at the agency if there are concerns with the infrastructure investment.

iv. Detailed information on any subcontracts or subgrants awarded by the recipient to include the data elements required to comply with the Federal Funding Accountability and Transparency Act of 2006, as amended (Pub. L. 109–282, hereafter referred to as "the Transparency Act"), allowing aggregate reporting on awards below $25,000 or to individuals, as prescribed by the Director of the Office of Management and Budget. The Transparency Act identifies specific data elements that the Web site (USAspending.gov) must include for each Federal award and authorizes OMB to specify additional elements for other relevant information. A 2008 amendment to the Transparency Act called the "Government Funding Transparency Act of 2008" (Pub. L. 110–252) added a requirement to collect

compensation information on certain chief executive officers (CEOs) of the recipient and subrecipient entity. An entity that receives assistance funding under the Recovery Act must report information required under the Transparency Act including, but not limited to,

1. The name of the entity receiving the award;
2. The amount of the award;
3. The transaction type;
4. The funding agency;
5. The Catalog of Federal Domestic Assistance number;
6. The program source;
7. The location of the entity receiving the award, including four data elements for the city, State, Congressional district, and country;
8. The location of the primary place of performance under the award, including four data elements for the city, State, Congressional district, and country;
9. A unique identifier of the entity receiving the award;
10. A unique identifier of the parent entity of the recipient, should the recipient be owned by another entity; and
11. The names and total compensation of the five most highly compensated officers of the company if it received (1) 80% or more of its annual gross revenues in Federal awards; and (2) $25M or more in annual gross revenue from Federal awards.

B. Section 1512(h) of the Recovery Act requires recipients of Recovery Act funds, including those receiving funds directly from the Federal Government, to register in the Central Contractor Registration (CCR) database at *http://www.ccr.gov*. Because recipients must report information on their first-tier contracts and awards, 2 CFR part 176 would establish a requirement for subrecipient registration in the CCR as a way to help ensure consistent reporting of data about each entity and thereby make the data more useful to the public. Without the requirement, multiple recipients doing business with the same entity may use different variations of the entity's name, address, or parent organization when they each report on their awards to the entity. It should be noted that in order to register in CCR, a valid Data Universal Numbering System (DUNS) Number is required.

C. Section 1605 of the Recovery Act requires that projects, funded by the Recovery Act, for the construction, alteration, maintenance, or repair of a public building or public work use American iron, steel, and manufactured goods in the project unless one of the specified exemptions applies. The Act provides that this requirement be applied in a manner consistent with U.S. obligations under international agreements. Definitions of "manufactured good," "public building and public work," and other terms as they pertain to the Buy American guidance in 2 CFR part 176 are found in § 176.140 and § 176.160.

D. Section 1606 of the Recovery Act requires the payment of Davis-Bacon Act (40 U.S.C. 31) wage rates to "laborers and mechanics employed by contractors and subcontractors on projects funded directly by or assisted in whole or in part by and through the Federal Government" pursuant to the Recovery Act.

E. To maximize the transparency and accountability of funds authorized under the Recovery Act as required by Congress and in accordance with 2 CFR 215.21, "Uniform Administrative Requirements for Grants and Agreements With Institutions of Higher Education, Hospitals, and other Non-Profit Organizations" and OMB Circular A–102 Common Rules provisions, recipients agree to maintain records that identify adequately the source and application of Recovery Act funds. Guidance and an award term are provided in part 176 to help ensure that recipients understand their responsibilities with respect to tracking, accounting and reporting transactions during the award and in preparing audit documentation and reports in accordance with OMB Circular A–133, if applicable.

II. Next Steps

We will consider all comments received on the interim final version of the OMB guidance as we develop the final guidance. Federal agencies that award grants, cooperative agreements, and other financial assistance awards will immediately implement this interim final guidance through the appropriate award terms. The award terms on awards made while this interim final version of this guidance is in effect do not need to be modified to reflect any modified award terms in the final guidance unless specifically required in the final guidance.

List of Subjects in 2 CFR Part 176

Assistance awards, Authorized agency action official, Award officials, Buy American, Classified, Davis-Bacon Act, Grants, Cooperative agreements, Loans, Recovery Act, Wage rate.

Danny Werfel,
Deputy Controller.

■ For the reasons set forth above, the Office of Management and Budget amends 2 CFR chapter I by adding part 176 to read as follows:

PART 176—AWARD TERMS FOR ASSISTANCE AGREEMENTS THAT INCLUDE FUNDS UNDER THE AMERICAN RECOVERY AND REINVESTMENT ACT OF 2009, PUBLIC LAW 111–5

Sec.
176.10 Purpose of this part.
176.20 Agency responsibilities (general).
176.30 Definitions.

Subpart A—Reporting and Registration Requirements under Section 1512 of the American Recovery and Reinvestment Act of 2009

176.40 Procedure.
176.50 Award term—Reporting and registration requirements under section 1512 of the Recovery Act.

Subpart B—Buy American Requirement Under Section 1605 of the American Recovery and Reinvestment Act of 2009

176.60 Statutory requirement.
176.70 Policy.
176.80 Exceptions.
176.90 Non-application to acquisitions covered under international agreements.
176.100 Timely determination concerning the inapplicability of section 1605 of the Recovery Act.
176.110 Evaluating proposals of foreign iron, steel, and/or manufactured goods.
176.120 Determinations on late requests.
176.130 Noncompliance.
176.140 Award term—Required Use of American Iron, Steel, and Manufactured Goods—Section 1605 of the American Recovery and Reinvestment Act of 2009.
176.150 Notice of Required Use of American Iron, Steel, and Manufactured Goods—Section 1605 of the American Recovery and Reinvestment Act of 2009.
176.160 Award term—Required Use of American Iron, Steel, and Manufactured Goods (covered under International Agreements)—Section 1605 of the American Recovery and Reinvestment Act of 2009.
176.170 Notice of Required Use of American Iron, Steel, and Manufactured Goods (covered under International Agreements)—Section 1605 of the American Recovery and Reinvestment Act of 2009.

Appendix to Subpart B of Part 176—U.S. States, Other Sub-Federal Entities, and Other Entities Subject to U.S. Obligations Under International Agreements

Subpart C—Wage Rate Requirements Under Section 1606 of the American Recovery and Reinvestment Act of 2009

176.180 Procedure.

176.190 Award term—Wage Rate Requirements under Section 1606 of the American Recovery and Reinvestment Act of 2009.

Subpart D—Single Audit Information for Recipients of Recovery Act Funds

176.200 Procedure.
176.210 Award term—Recovery Act Transactions listed in Schedule of Expenditures of Federal Awards and Recipient Responsibilities for Informing Subrecipients.

Authority: American Recovery and Reinvestment Act of 2009, Public Law 111–5; Federal Funding Accountability and Transparency Act of 2006, (Pub. L. 109–282), as amended.

§ 176.10 Purpose of this part.

This part establishes Federal Governmentwide award terms for financial assistance awards, namely, grants, cooperative agreements, and loans, to implement the cross-cutting requirements of the American Recovery and Reinvestment Act of 2009, Public Law 111–5 (Recovery Act). These requirements are cross-cutting in that they apply to more than one agency's awards.

§ 176.20 Agency responsibilities (general).

(a) In any assistance award funded in whole or in part by the Recovery Act, the award official shall indicate that the award is being made under the Recovery Act, and indicate what projects and/or activities are being funded under the Recovery Act. This requirement applies whenever Recovery Act funds are used, regardless of the assistance type.

(b) To maximize transparency of Recovery Act funds required for reporting by the assistance recipient, the award official shall consider structuring assistance awards to allow for separately tracking Recovery Act funds.

(c) Award officials shall ensure that recipients comply with the Recovery Act requirements of Subpart A. If the recipient fails to comply with the reporting requirements or other award terms, the award official or other authorized agency action official shall take the appropriate enforcement or termination action in accordance with 2 CFR 215.62 or the agency's implementation of the OMB Circular A–102 grants management common rule. OMB Circular A–102 is available at *http://www.whitehouse.gov/omb/circulars/a102/a102.html.*

(d) The award official shall make the recipient's failure to comply with the reporting requirements a part of the recipient's performance record.

§ 176.30 Definitions.

As used in this part—

Award means any grant, cooperative agreement or loan made with Recovery Act funds. Award official means a person with the authority to enter into, administer, and/or terminate financial assistance awards and make related determinations and findings.

Classified or *"classified information"* means any knowledge that can be communicated or any documentary material, regardless of its physical form or characteristics, that—

(1)(i) Is owned by, is produced by or for, or is under the control of the United States Government; or

(ii) Has been classified by the Department of Energy as privately generated restricted data following the procedures in 10 CFR 1045.21; and

(2) Must be protected against unauthorized disclosure according to Executive Order 12958, Classified National Security Information, April 17, 1995, or classified in accordance with the Atomic Energy Act of 1954.

Recipient means any entity other than an individual that receives Recovery Act funds in the form of a grant, cooperative agreement or loan directly from the Federal Government.

Recovery funds or Recovery Act funds are funds made available through the appropriations of the American Recovery and Reinvestment Act of 2009, Public Law 111–5.

Subaward means—

(1) A legal instrument to provide support for the performance of any portion of the substantive project or program for which the recipient received this award and that the recipient awards to an eligible subrecipient;

(2) The term does not include the recipient's procurement of property and services needed to carry out the project or program (for further explanation, see §____.210 of the attachment to OMB Circular A–133, "Audits of States, Local Governments, and Non-Profit Organizations"). OMB Circular A–133 is available at *http://www.whitehouse.gov/omb/circulars/a133/a133.html.*

(3) A subaward may be provided through any legal agreement, including an agreement that the recipient or a subrecipient considers a contract.

Subcontract means a legal instrument used by a recipient for procurement of property and services needed to carry out the project or program.

Subrecipient or *Subawardee* means a non-Federal entity that expends Federal awards received from a pass-through entity to carry out a Federal program, but does not include an individual that is a beneficiary of such a program. A subrecipient may also be a recipient of other Federal awards directly from a Federal awarding agency. Guidance on distinguishing between a subrecipient and a vendor is provided in §____.210 of OMB Circular A–133.

Subpart A—Reporting and Registration Requirements Under Section 1512 of the American Recovery and Reinvestment Act of 2009

§ 176.40 Procedure.

The award official shall insert the standard award term in this Subpart in all awards funded in whole or in part with Recovery Act funds, except for those that are classified, awarded to individuals, or awarded under mandatory and entitlement programs, except as specifically required by OMB, or expressly exempted from the reporting requirement in the Recovery Act.

§ 176.50 Award term—Reporting and registration requirements under section 1512 of the Recovery Act.

Agencies are responsible for ensuring that their recipients report information required under the Recovery Act in a timely manner. The following award term shall be used by agencies to implement the recipient reporting and registration requirements in section 1512:

(a) This award requires the recipient to complete projects or activities which are funded under the American Recovery and Reinvestment Act of 2009 (Recovery Act) and to report on use of Recovery Act funds provided through this award. Information from these reports will be made available to the public.

(b) The reports are due no later than ten calendar days after each calendar quarter in which the recipient receives the assistance award funded in whole or in part by the Recovery Act.

(c) Recipients and their first-tier recipients must maintain current registrations in the Central Contractor Registration (*http://www.ccr.gov*) at all times during which they have active federal awards funded with Recovery Act funds. A Dun and Bradstreet Data Universal Numbering System (DUNS) Number (*http://www.dnb.com*) is one of the requirements for registration in the Central Contractor Registration.

(d) The recipient shall report the information described in section 1512(c) of the Recovery Act using the reporting instructions and data elements that will be provided online at *http://www.FederalReporting.gov* and ensure that any information that is pre-filled is corrected or updated as needed.

Subpart B—Buy American Requirement Under Section 1605 of the American Recovery and Reinvestment Act of 2009

§ 176.60 Statutory requirement.

Section 1605 of the Recovery Act prohibits use of recovery funds for a project for the construction, alteration, maintenance, or repair of a public building or public work unless all of the iron, steel, and manufactured goods used in the project are produced in the United States. The law requires that this prohibition be applied in a manner consistent with U.S. obligations under international agreements, and it provides for waiver under three circumstances:

(a) Iron, steel, or relevant manufactured goods are not produced in the United States in sufficient and reasonably available quantities and of a satisfactory quality;

(b) Inclusion of iron, steel, or manufactured goods produced in the United States will increase the cost of the overall project by more than 25 percent; or

(c) Applying the domestic preference would be inconsistent with the public interest.

§ 176.70 Policy.

Except as provided in § 176.80 or § 176.90—

(a) None of the funds appropriated or otherwise made available by the Recovery Act may be used for a project for the construction, alteration, maintenance, or repair of a public building or public work (see definitions at §§ 176.140 and 176.160) unless—

(1) The public building or public work is located in the United States; and

(2) All of the iron, steel, and manufactured goods used in the project are produced or manufactured in the United States.

(i) Production in the United States of the iron or steel used in the project requires that all manufacturing processes must take place in the United States, except metallurgical processes involving refinement of steel additives. These requirements do not apply to iron or steel used as components or subcomponents of manufactured goods used in the project.

(ii) There is no requirement with regard to the origin of components or subcomponents in manufactured goods used in the project, as long as the manufacturing occurs in the United States.

(b) Paragraph (a) of this section shall not apply where the Recovery Act requires the application of alternative Buy American requirements for iron, steel, and manufactured goods.

§ 176.80 Exceptions.

(a) When one of the following exceptions applies in a case or category of cases, the award official may allow the recipient to use foreign iron, steel and/or manufactured goods in the project without regard to the restrictions of section 1605 of the Recovery Act:

(1) *Nonavailability.* The head of the Federal department or agency may determine that the iron, steel or relevant manufactured good is not produced or manufactured in the United States in sufficient and reasonably available commercial quantities of a satisfactory quality. The determinations of nonavailability of the articles listed at 48 CFR 25.104(a) and the procedures at 48 CFR 25.103(b)(1) also apply if any of those articles are manufactured goods needed in the project.

(2) *Unreasonable cost.* The head of the Federal department or agency may determine that the cost of domestic iron, steel, or relevant manufactured goods will increase the cost of the overall project by more than 25 percent in accordance with § 176.110.

(3) *Inconsistent with public interest.* The head of the Federal department or agency may determine that application of the restrictions of section 1605 of the Recovery Act would be inconsistent with the public interest.

(b) When a determination is made for any of the reasons stated in this section that certain foreign iron, steel, and/or manufactured goods may be used—

(1) The award official shall list the excepted materials in the award; and

(2) The head of the Federal department or agency shall publish a notice in the **Federal Register** within two weeks after the determination is made, unless the item has already been determined to be domestically nonavailable. A list of items that are not domestically available is at 48 CFR 25.104(a). The **Federal Register** notice or information from the notice may be posted by OMB to Recovery.gov. The notice shall include—

(i) The title "Buy American Exception under the American Recovery and Reinvestment Act of 2009";

(ii) The dollar value and brief description of the project; and

(iii) A detailed written justification as to why the restriction is being waived.

§ 176.90 Non-application to acquisitions covered under international agreements.

Acquisitions covered by international agreements. Section 1605(d) of the Recovery Act provides that the Buy American requirement in section 1605 shall be applied in a manner consistent with U.S. obligations under international agreements.

(a) The Buy American requirement set out in § 176.70 shall not be applied where the iron, steel, or manufactured goods used in the project are from a Party to an international agreement, listed in paragraph (b)(2) of this section, and the recipient is required under an international agreement, described in the appendix to this subpart, to treat the goods and services of that Party the same as domestic goods and services. This obligation shall only apply to projects with an estimated value of $7,443,000 or more and projects that are not specifically excluded from the application of those agreements.

(b) The international agreements that obligate recipients that are covered under an international agreement to treat the goods and services of a Party the same as domestic goods and services and the respective Parties to the agreements are:

(1) The World Trade Organization Government Procurement Agreement (Aruba, Austria, Belgium, Bulgaria, Canada, Cyprus, Czech Republic, Denmark, Estonia, Finland, France, Germany, Greece, Hong Kong, Hungary, Iceland, Ireland, Israel, Italy, Japan, Korea (Republic of), Latvia, Liechtenstein, Lithuania, Luxembourg, Malta, Netherlands, Norway, Poland, Portugal, Romania, Singapore, Slovak Republic, Slovenia, Spain, Sweden, Switzerland, and United Kingdom);

(2) The following Free Trade Agreements:

(i) Dominican Republic-Central America-United States Free Trade Agreement (Costa Rica, Dominican Republic, El Salvador, Guatemala, Honduras, Nicaragua);

(ii) North American Free Trade Agreement (NAFTA) (Canada and Mexico);

(iii) United States-Australia Free Trade Agreement;

(iv) United States-Bahrain Free Trade Agreement;

(v) United States-Chile Free Trade Agreement;

(vi) United States-Israel Free Trade Agreement;

(vii) United States-Morocco Free Trade Agreement;

(viii) United States-Oman Free Trade Agreement;

(ix) United States-Peru Trade Promotion Agreement; and

(x) United States-Singapore Free Trade Agreement.

(3) United States-European Communities Exchange of Letters (May 15, 1995): Austria, Belgium, Bulgaria, Cyprus, Czech Republic, Denmark,

Estonia, Finland, France, Germany, Greece, Hungary, Ireland, Italy, Latvia, Lithuania, Luxembourg, Malta, Netherlands, Poland, Portugal, Romania, Slovak Republic, Slovenia, Spain, Sweden, and United Kingdom.

§ 176.100 Timely determination concerning the inapplicability of section 1605 of the Recovery Act.

(a) The head of the Federal department or agency involved may make a determination regarding inapplicability of section 1605 to a particular case or to a category of cases.

(b) Before Recovery Act funds are awarded by the Federal agency or obligated by the recipient for a project for the construction, alteration, maintenance, or repair of a public building or public work, an applicant or recipient may request from the award official a determination concerning the inapplicability of section 1605 of the Recovery Act for specifically identified items.

(c) The time for submitting the request and the information and supporting data that must be included in the request are to be specified in the agency's and recipient's request for applications and/or proposals, and as appropriate, in other written communications. The content of those communications should be consistent with the notice in § 176.150 or § 176.170, whichever applies.

(d) The award official must evaluate all requests based on the information provided and may supplement this information with other readily available information.

(e) In making a determination based on the increased cost to the project of using domestic iron, steel, and/or manufactured goods, the award official must compare the total estimated cost of the project using foreign iron, steel and/or relevant manufactured goods to the estimated cost if all domestic iron, steel, and/or relevant manufactured goods were used. If use of domestic iron, steel, and/or relevant manufactured goods would increase the cost of the overall project by more than 25 percent, then the award official shall determine that the cost of the domestic iron, steel, and/or relevant manufactured goods is unreasonable.

§ 176.110 Evaluating proposals of foreign iron, steel, and/or manufactured goods.

(a) If the award official receives a request for an exception based on the cost of certain domestic iron, steel, and/or manufactured goods being unreasonable, in accordance with § 176.80, then the award official shall apply evaluation factors to the proposal to use such foreign iron, steel, and/or manufactured goods as follows:

(1) Use an evaluation factor of 25 percent, applied to the total estimated cost of the project, if the foreign iron, steel, and/or manufactured goods are to be used in the project based on an exception for unreasonable cost requested by the applicant.

(2) Total evaluated cost = project cost estimate + (.25 × project cost estimate, if paragraph (a)(1) of this section applies).

(b) Applicants or recipients also may submit alternate proposals based on use of equivalent domestic iron, steel, and/or manufactured goods to avoid possible denial of Recovery Act funding for the proposal if the Federal Government determines that an exception permitting use of the foreign item(s) does not apply.

(c) If the award official makes an award to an applicant that proposed foreign iron, steel, and/or manufactured goods not listed in the applicable notice in the request for applications or proposals, then the award official must add the excepted materials to the list in the award term.

§ 176.120 Determinations on late requests.

(a) If a recipient requests a determination regarding the inapplicability of section 1605 of the Recovery Act after obligating Recovery Act funds for a project for construction, alteration, maintenance, or repair (late request), the recipient must explain why it could not request the determination before making the obligation or why the need for such determination otherwise was not reasonably foreseeable. If the award official concludes that the recipient should have made the request before making the obligation, the award official may deny the request.

(b) The award official must base evaluation of any late request for a determination regarding the inapplicability of section 1605 of the Recovery Act on information required by § 176.150(c) and (d) or § 176.170(c) and (d) and/or other readily available information.

(c) If a determination, under § 176.80 is made after Recovery Act funds were obligated for a project for construction, alteration, maintenance, or repair that an exception to section 1605 of the Recovery Act applies, the award official must amend the award to allow use of the foreign iron, steel, and/or relevant manufactured goods. When the basis of the exception is nonavailability or public interest, the amended award shall reflect adjustment of the award amount, redistribution of budgeted funds, and/or other appropriate actions taken to cover costs associated with acquiring or using the foreign iron, steel, and/or manufactured goods. When the basis for the exception is the unreasonable cost of domestic iron, steel, and/or manufactured goods the award official shall adjust the award amount or the budget, as appropriate, by at least the differential established in § 176.110(a).

§ 176.130 Noncompliance.

The award official must—

(a) Review allegations of violations of section 1605 of the Recovery Act;

(b) Unless fraud is suspected, notify the recipient of the apparent unauthorized use of foreign iron, steel, and/or manufactured goods and request a reply, to include proposed corrective action; and

(c) If the review reveals that a recipient or subrecipient has used foreign iron, steel, and/or manufactured goods without authorization, take appropriate action, including one or more of the following:

(1) Process a determination concerning the inapplicability of section 1605 of the Recovery Act in accordance with § 176.120.

(2) Consider requiring the removal and replacement of the unauthorized foreign iron, steel, and/or manufactured goods.

(3) If removal and replacement of foreign iron, steel, and/or manufactured goods used in a public building or a public work would be impracticable, cause undue delay, or otherwise be detrimental to the interests of the Federal Government, the award official may determine in writing that the foreign iron, steel, and/or manufactured goods need not be removed and replaced. A determination to retain foreign iron, steel, and/or manufactured goods does not constitute a determination that an exception to section 1605 of the Recovery Act applies, and this should be stated in the determination. Further, a determination to retain foreign iron, steel, and/or manufactured goods does not affect the Federal Government's right to reduce the amount of the award by the cost of the steel, iron, or manufactured goods that are used in the project or to take enforcement or termination action in accordance with the agency's grants management regulations.

(4) If the noncompliance is sufficiently serious, consider exercising appropriate remedies, such as withholding cash payments pending correction of the deficiency, suspending or terminating the award, and withholding further awards for the project. Also consider preparing and

forwarding a report to the agency suspending or debarring official in accordance with the agency's debarment rule implementing 2 CFR part 180. If the noncompliance appears to be fraudulent, refer the matter to other appropriate agency officials, such as the officer responsible for criminal investigation.

§ 176.140 Award term—Required Use of American Iron, Steel, and Manufactured Goods—Section 1605 of the American Recovery and Reinvestment Act of 2009.

When awarding Recovery Act funds for construction, alteration, maintenance, or repair of a public building or public work that does not involve iron, steel, and/or manufactured goods covered under international agreements, the agency shall use the award term described in the following paragraphs:

(a) *Definitions.* As used in this award term and condition—

(1) *Manufactured good* means a good brought to the construction site for incorporation into the building or work that has been—

(i) Processed into a specific form and shape; or

(ii) Combined with other raw material to create a material that has different properties than the properties of the individual raw materials.

(2) *Public building and public work* means a public building of, and a public work of, a governmental entity (the United States; the District of Columbia; commonwealths, territories, and minor outlying islands of the United States; State and local governments; and multi-State, regional, or interstate entities which have governmental functions). These buildings and works may include, without limitation, bridges, dams, plants, highways, parkways, streets, subways, tunnels, sewers, mains, power lines, pumping stations, heavy generators, railways, airports, terminals, docks, piers, wharves, ways, lighthouses, buoys, jetties, breakwaters, levees, and canals, and the construction, alteration, maintenance, or repair of such buildings and works.

(3) *Steel* means an alloy that includes at least 50 percent iron, between .02 and 2 percent carbon, and may include other elements.

(b) *Domestic preference.* (1) This award term and condition implements Section 1605 of the American Recovery and Reinvestment Act of 2009 (Recovery Act) (Pub. L. 111–5), by requiring that all iron, steel, and manufactured goods used in the project are produced in the United States except as provided in paragraph (b)(3) and (b)(4) of this section and condition.

(2) This requirement does not apply to the material listed by the Federal Government as follows:

[*Award official to list applicable excepted materials or indicate "none"*]

(3) The award official may add other iron, steel, and/or manufactured goods to the list in paragraph (b)(2) of this section and condition if the Federal Government determines that—

(i) The cost of the domestic iron, steel, and/or manufactured goods would be unreasonable. The cost of domestic iron, steel, or manufactured goods used in the project is unreasonable when the cumulative cost of such material will increase the cost of the overall project by more than 25 percent;

(ii) The iron, steel, and/or manufactured good is not produced, or manufactured in the United States in sufficient and reasonably available quantities and of a satisfactory quality; or

(iii) The application of the restriction of section 1605 of the Recovery Act would be inconsistent with the public interest.

(c) *Request for determination of inapplicability of Section 1605 of the Recovery Act.* (1)(i) Any recipient request to use foreign iron, steel, and/or manufactured goods in accordance with paragraph (b)(3) of this section shall include adequate information for Federal Government evaluation of the request, including—

(A) A description of the foreign and domestic iron, steel, and/or manufactured goods;

(B) Unit of measure;

(C) Quantity;

(D) Cost;

(E) Time of delivery or availability;

(F) Location of the project;

(G) Name and address of the proposed supplier; and

(H) A detailed justification of the reason for use of foreign iron, steel, and/or manufactured goods cited in accordance with paragraph (b)(3) of this section.

(ii) A request based on unreasonable cost shall include a reasonable survey of the market and a completed cost comparison table in the format in paragraph (d) of this section.

(iii) The cost of iron, steel, and/or manufactured goods material shall include all delivery costs to the construction site and any applicable duty.

(iv) Any recipient request for a determination submitted after Recovery Act funds have been obligated for a project for construction, alteration, maintenance, or repair shall explain why the recipient could not reasonably foresee the need for such determination and could not have requested the determination before the funds were obligated. If the recipient does not submit a satisfactory explanation, the award official need not make a determination.

(2) If the Federal Government determines after funds have been obligated for a project for construction, alteration, maintenance, or repair that an exception to section 1605 of the Recovery Act applies, the award official will amend the award to allow use of the foreign iron, steel, and/or relevant manufactured goods. When the basis for the exception is nonavailability or public interest, the amended award shall reflect adjustment of the award amount, redistribution of budgeted funds, and/or other actions taken to cover costs associated with acquiring or using the foreign iron, steel, and/or relevant manufactured goods. When the basis for the exception is the unreasonable cost of the domestic iron, steel, or manufactured goods, the award official shall adjust the award amount or redistribute budgeted funds by at least the differential established in 2 CFR 176.110(a).

(3) Unless the Federal Government determines that an exception to section 1605 of the Recovery Act applies, use of foreign iron, steel, and/or manufactured goods is noncompliant with section 1605 of the American Recovery and Reinvestment Act.

(d) *Data.* To permit evaluation of requests under paragraph (b) of this section based on unreasonable cost, the Recipient shall include the following information and any applicable supporting data based on the survey of suppliers:

FOREIGN AND DOMESTIC ITEMS COST COMPARISON

Description	Unit of measure	Quantity	Cost (dollars)*
Item 1:			
Foreign steel, iron, or manufactured good	_____	_____	_____
Domestic steel, iron, or manufactured good	_____	_____	_____
Item 2:			
Foreign steel, iron, or manufactured good	_____	_____	_____
Domestic steel, iron, or manufactured good	_____	_____	_____

[List name, address, telephone number, email address, and contact for suppliers surveyed. Attach copy of response; if oral, attach summary.]
[Include other applicable supporting information.]
*[*Include all delivery costs to the construction site.]*

§ 176.150 Notice of Required Use of American Iron, Steel, and Manufactured Goods—Section 1605 of the American Recovery and Reinvestment Act of 2009.

When requesting applications or proposals for Recovery Act programs or activities that may involve construction, alteration, maintenance, or repair of a public building or public work, and do not involve iron, steel, and/or manufactured goods covered under international agreements, the agency shall use the notice described in the following paragraphs in their solicitations:

(a) *Definitions.* Manufactured good, public building and public work, and steel, as used in this notice, are defined in the 2 CFR 176.140.

(b) *Requests for determinations of inapplicability.* A prospective applicant requesting a determination regarding the inapplicability of section 1605 of the American Recovery and Reinvestment Act of 2009 (Pub. L. 111–5) (Recovery Act) should submit the request to the award official in time to allow a determination before submission of applications or proposals. The prospective applicant shall include the information and applicable supporting data required by paragraphs at 2 CFR 176.140(c) and (d) in the request. If an applicant has not requested a determination regarding the inapplicability of 1605 of the Recovery Act before submitting its application or proposal, or has not received a response to a previous request, the applicant shall include the information and supporting data in the application or proposal.

(c) *Evaluation of project proposals.* If the Federal Government determines that an exception based on unreasonable cost of domestic iron, steel, and/or manufactured goods applies, the Federal Government will evaluate a project requesting exception to the requirements of section 1605 of the Recovery Act by adding to the estimated total cost of the project 25 percent of the project cost, if foreign iron, steel, or manufactured goods are used in the project based on unreasonable cost of comparable manufactured domestic iron, steel, and/or manufactured goods.

(d) *Alternate project proposals.* (1) When a project proposal includes foreign iron, steel, and/or manufactured goods not listed by the Federal Government at 2 CFR 176.140(b)(2), the applicant also may submit an alternate proposal based on use of equivalent domestic iron, steel, and/or manufactured goods.

(2) If an alternate proposal is submitted, the applicant shall submit a separate cost comparison table prepared in accordance with 2 CFR 176.140(c) and (d) for the proposal that is based on the use of any foreign iron, steel, and/or manufactured goods for which the Federal Government has not yet determined an exception applies.

(3) If the Federal Government determines that a particular exception requested in accordance with 2 CFR 176.140(b) does not apply, the Federal Government will evaluate only those proposals based on use of the equivalent domestic iron, steel, and/or manufactured goods, and the applicant shall be required to furnish such domestic items.

§ 176.160 Award term—Required Use of American Iron, Steel, and Manufactured Goods (covered under International Agreements)—Section 1605 of the American Recovery and Reinvestment Act of 2009.

When awarding Recovery Act funds for construction, alteration, maintenance, or repair of a public building or public work that involves iron, steel, and/or manufactured goods materials covered under international agreements, the agency shall use the award term described in the following paragraphs:

(a) *Definitions.* As used in this award term and condition—

Designated country—(1) A World Trade Organization Government Procurement Agreement country (Aruba, Austria, Belgium, Bulgaria, Canada, Cyprus, Czech Republic, Denmark, Estonia, Finland, France, Germany, Greece, Hong Kong, Hungary, Iceland, Ireland, Israel, Italy, Japan, Korea (Republic of), Latvia, Liechtenstein, Lithuania, Luxembourg, Malta, Netherlands, Norway, Poland, Portugal, Romania, Singapore, Slovak Republic, Slovenia, Spain, Sweden, Switzerland, and United Kingdom;

(2) A Free Trade Agreement (FTA) country (Australia, Bahrain, Canada, Chile, Costa Rica, Dominican Republic, El Salvador, Guatemala, Honduras, Israel, Mexico, Morocco, Nicaragua, Oman, Peru, or Singapore); or

(3) A United States-European Communities Exchange of Letters (May 15, 1995) country: Austria, Belgium, Bulgaria, Cyprus, Czech Republic, Denmark, Estonia, Finland, France, Germany, Greece, Hungary, Ireland, Italy, Latvia, Lithuania, Luxembourg, Malta, Netherlands, Poland, Portugal, Romania, Slovak Republic, Slovenia, Spain, Sweden, and United Kingdom.

Designated country iron, steel, and/or manufactured goods—(1) Is wholly the growth, product, or manufacture of a designated country; or

(2) In the case of a manufactured good that consist in whole or in part of materials from another country, has been substantially transformed in a designated country into a new and different manufactured good distinct from the materials from which it was transformed.

Domestic iron, steel, and/or manufactured good—(1) Is wholly the growth, product, or manufacture of the United States; or

(2) In the case of a manufactured good that consists in whole or in part of materials from another country, has been substantially transformed in the United States into a new and different manufactured good distinct from the materials from which it was transformed. There is no requirement with regard to the origin of components or subcomponents in manufactured goods or products, as long as the manufacture of the goods occurs in the United States.

Foreign iron, steel, and/or manufactured good means iron, steel

and/or manufactured good that is not domestic or designated country iron, steel, and/or manufactured good.

Manufactured good means a good brought to the construction site for incorporation into the building or work that has been—

(1) Processed into a specific form and shape; or

(2) Combined with other raw material to create a material that has different properties than the properties of the individual raw materials.

Public building and *public work* means a public building of, and a public work of, a governmental entity (the United States; the District of Columbia; commonwealths, territories, and minor outlying islands of the United States; State and local governments; and multi-State, regional, or interstate entities which have governmental functions). These buildings and works may include, without limitation, bridges, dams, plants, highways, parkways, streets, subways, tunnels, sewers, mains, power lines, pumping stations, heavy generators, railways, airports, terminals, docks, piers, wharves, ways, lighthouses, buoys, jetties, breakwaters, levees, and canals, and the construction, alteration, maintenance, or repair of such buildings and works.

Steel means an alloy that includes at least 50 percent iron, between .02 and 2 percent carbon, and may include other elements.

(b) *Iron, steel, and manufactured goods.* (1) The award term and condition described in this section implements—

(i) Section 1605(a) of the American Recovery and Reinvestment Act of 2009 (Pub. L. 111–5) (Recovery Act), by requiring that all iron, steel, and manufactured goods used in the project are produced in the United States; and

(ii) Section 1605(d), which requires application of the Buy American requirement in a manner consistent with U.S. obligations under international agreements. The restrictions of section 1605 of the Recovery Act do not apply to designated country iron, steel, and/or manufactured goods. The Buy American requirement in section 1605 shall not be applied where the iron, steel or manufactured goods used in the project are from a Party to an international agreement that obligates the recipient to treat the goods and services of that Party the same as domestic goods and services. This obligation shall only apply to projects with an estimated value of $7,443,000 or more.

(2) The recipient shall use only domestic or designated country iron, steel, and manufactured goods in performing the work funded in whole or part with this award, except as provided in paragraphs (b)(3) and (b)(4) of this section.

(3) The requirement in paragraph (b)(2) of this section does not apply to the iron, steel, and manufactured goods listed by the Federal Government as follows:

[*Award official to list applicable excepted materials or indicate "none"*]

(4) The award official may add other iron, steel, and manufactured goods to the list in paragraph (b)(3) of this section if the Federal Government determines that—

(i) The cost of domestic iron, steel, and/or manufactured goods would be unreasonable. The cost of domestic iron, steel, and/or manufactured goods used in the project is unreasonable when the cumulative cost of such material will increase the overall cost of the project by more than 25 percent;

(ii) The iron, steel, and/or manufactured good is not produced, or manufactured in the United States in sufficient and reasonably available commercial quantities of a satisfactory quality; or

(iii) The application of the restriction of section 1605 of the Recovery Act would be inconsistent with the public interest.

(c) *Request for determination of inapplicability of section 1605 of the Recovery Act or the Buy American Act.* (1)(i) Any recipient request to use foreign iron, steel, and/or manufactured goods in accordance with paragraph (b)(4) of this section shall include adequate information for Federal Government evaluation of the request, including—

(A) A description of the foreign and domestic iron, steel, and/or manufactured goods;

(B) Unit of measure;

(C) Quantity;

(D) Cost;

(E) Time of delivery or availability;

(F) Location of the project;

(G) Name and address of the proposed supplier; and

(H) A detailed justification of the reason for use of foreign iron, steel, and/or manufactured goods cited in accordance with paragraph (b)(4) of this section.

(ii) A request based on unreasonable cost shall include a reasonable survey of the market and a completed cost comparison table in the format in paragraph (d) of this section.

(iii) The cost of iron, steel, or manufactured goods shall include all delivery costs to the construction site and any applicable duty.

(iv) Any recipient request for a determination submitted after Recovery Act funds have been obligated for a project for construction, alteration, maintenance, or repair shall explain why the recipient could not reasonably foresee the need for such determination and could not have requested the determination before the funds were obligated. If the recipient does not submit a satisfactory explanation, the award official need not make a determination.

(2) If the Federal Government determines after funds have been obligated for a project for construction, alteration, maintenance, or repair that an exception to section 1605 of the Recovery Act applies, the award official will amend the award to allow use of the foreign iron, steel, and/or relevant manufactured goods. When the basis for the exception is nonavailability or public interest, the amended award shall reflect adjustment of the award amount, redistribution of budgeted funds, and/or other appropriate actions taken to cover costs associated with acquiring or using the foreign iron, steel, and/or relevant manufactured goods.. When the basis for the exception is the unreasonable cost of the domestic iron, steel, or manufactured goods, the award official shall adjust the award amount or redistribute budgeted funds, as appropriate, by at least the differential established in 2 CFR 176.110(a).

(3) Unless the Federal Government determines that an exception to section 1605 of the Recovery Act applies, use of foreign iron, steel, and/or manufactured goods other than designated country iron, steel, and/or manufactured goods is noncompliant with the applicable Act.

(d) *Data.* To permit evaluation of requests under paragraph (b) of this section based on unreasonable cost, the applicant shall include the following information and any applicable supporting data based on the survey of suppliers:

FOREIGN AND DOMESTIC ITEMS COST COMPARISON

Description	Unit of measure	Quantity	Cost (dollars)*
Item 1:			
Foreign steel, iron, or manufactured good	_____	_____	_____
Domestic steel, iron, or manufactured good	_____	_____	_____
Item 2:			
Foreign steel, iron, or manufactured good	_____	_____	_____
Domestic steel, iron, or manufactured good	_____	_____	_____

[List name, address, telephone number, email address, and contact for suppliers surveyed. Attach copy of response; if oral, attach summary.]
[Include other applicable supporting information.]
*[*Include all delivery costs to the construction site.]*

§ 176.170 Notice of Required Use of American Iron, Steel, and Manufactured Goods (covered under International Agreements)—Section 1605 of the American Recovery and Reinvestment Act of 2009.

When requesting applications or proposals for Recovery Act programs or activities that may involve construction, alteration, maintenance, or repair of a public building or public work, and involve iron, steel, and/or manufactured goods covered under international agreements, the agency shall use the notice described in the following paragraphs in the solicitation:

(a) *Definitions. Designated country iron, steel, and/or manufactured goods, foreign iron, steel, and/or manufactured good, manufactured good, public building* and *public work*, and *steel*, as used in this provision, are defined in 2 CFR 176.160(a).

(b) *Requests for determinations of inapplicability.* A prospective applicant requesting a determination regarding the inapplicability of section 1605 of the American Recovery and Reinvestment Act of 2009 (Pub. L. 111–5) (Recovery Act) should submit the request to the award official in time to allow a determination before submission of applications or proposals. The prospective applicant shall include the information and applicable supporting data required by 2 CFR 176.160 (c) and (d) in the request. If an applicant has not requested a determination regarding the inapplicability of section 1605 of the Recovery Act before submitting its application or proposal, or has not received a response to a previous request, the applicant shall include the information and supporting data in the application or proposal.

(c) *Evaluation of project proposals.* If the Federal Government determines that an exception based on unreasonable cost of domestic iron, steel, and/or manufactured goods applies, the Federal Government will evaluate a project requesting exception to the requirements of section 1605 of the Recovery Act by adding to the estimated total cost of the project 25 percent of the project cost if foreign iron, steel, or manufactured goods are used based on unreasonable cost of comparable domestic iron, steel, or manufactured goods.

(d) *Alternate project proposals.* (1) When a project proposal includes foreign iron, steel, and/or manufactured goods, other than designated country iron, steel, and/or manufactured goods, that are not listed by the Federal Government in this Buy American notice in the request for applications or proposals, the applicant may submit an alternate proposal based on use of equivalent domestic or designated country iron, steel, and/or manufactured goods.

(2) If an alternate proposal is submitted, the applicant shall submit a separate cost comparison table prepared in accordance with paragraphs 2 CFR 176.160(c) and (d) for the proposal that is based on the use of any foreign iron, steel, and/or manufactured goods for which the Federal Government has not yet determined an exception applies.

(3) If the Federal Government determines that a particular exception requested in accordance with 2 CFR 176.160(b) does not apply, the Federal Government will evaluate only those proposals based on use of the equivalent domestic or designated country iron, steel, and/or manufactured goods, and the applicant shall be required to furnish such domestic or designated country items.

Appendix to Subpart B of Part 176—U.S. States, Other Sub-Federal Entities, and Other Entities Subject to U.S. Obligations Under International Agreements

States	Entities covered	Exclusions	Relevant international agreements
Arizona	Executive branch agencies		—WTO GPA (except Canada). —U.S.-Chile FTA. —U.S.-Singapore FTA.
Arkansas	Executive branch agencies, including universities but excluding the Office of Fish and Game.	construction services	—WTO GPA (except Canada). —DR–CAFTA. —U.S.-Australia FTA. —U.S.-Chile FTA. —U.S.-Morocco FTA. —US.-Peru TPA. —U.S.-Singapore FTA.
California	Executive branch agencies		—WTO GPA (except Canada). —U.S.-Australia FTA. —U.S.-Chile FTA. —U.S.-Singapore FTA.
Colorado	Executive branch agencies		—WTO GPA (except Canada). —DR–CAFTA. —U.S.-Australia FTA. —U.S.-Chile FTA. —U.S.-Morocco FTA. —U.S.-Peru TPA.

States	Entities covered	Exclusions	Relevant international agreements
Connecticut	—Department of Administrative Services. —Department of Transportation. —Department of Public Works. —Constituent Units of Higher Education.		—U.S.-Singapore FTA. —WTO GPA (except Canada). —DR–CAFTA. —U.S.-Australia FTA. —U.S.-Chile FTA. —U.S.-Morocco FTA. —U.S.-Singapore FTA.
Delaware	—Administrative Services (Central Procurement Agency). —State Universities. —State Colleges.	construction-grade steel (including requirements on subcontracts); motor vehicles; coal.	—WTO GPA (except Canada). —DR–CAFTA (except Honduras). —U.S.-Australia FTA. —U.S.-Chile FTA. —U.S.-Morocco FTA. —U.S.-Singapore FTA.
Florida	Executive branch agencies	construction-grade steel (including requirements on subcontracts); motor vehicles; coal.	—WTO GPA (except Canada). —DR–CAFTA. —U.S.-Australia FTA. —U.S.-Chile FTA. —U.S.-Morocco FTA. —U.S.-Peru TPA. —U.S.-Singapore FTA.
Georgia	—Department of Administrative Services —Georgia Technology Authority.	beef; compost; mulch	—U.S.-Australia FTA.
Hawaii	Department of Accounting and General Services.	software developed in the state; construction.	—WTO GPA (except Canada). —DR–CAFTA (except Honduras). —U.S.-Australia FTA. —U.S.-Chile FTA. —U.S.-Morocco FTA. —U.S.-Singapore FTA.
Idaho	Central Procurement Agency (including all colleges and universities subject to central purchasing oversight).		—WTO GPA (except Canada). —DR–CAFTA (except Honduras). —U.S.-Australia FTA. —U.S.-Chile FTA. —U.S.-Morocco FTA. —U.S.-Singapore FTA.
Illinois	—Department of Central Management Services.	construction-grade steel (including requirements on subcontracts); motor vehicles; coal.	—WTO GPA (except Canada). —U.S.-Australia FTA. —U.S.-Chile FTA. —U.S.-Peru TPA. —U.S.-Singapore FTA. —U.S.-EC Exchange of Letters (applies to EC Member States for procurement not covered by WTO GPA and only where the state considers out-of-state suppliers).
Iowa	—Department of General Services —Department of Transportation. —Board of Regents' Institutions (universities).	construction-grade steel (including requirements on subcontracts); motor vehicles; coal.	—WTO GPA (except Canada). —U.S.-Chile FTA. —U.S.-Singapore FTA.
Kansas	Executive branch agencies	construction services; automobiles; aircraft.	—WTO GPA (except Canada). —U.S.-Australia FTA. —U.S.-Chile FTA. —U.S.-Morocco FTA. —U.S.-Singapore FTA.
Kentucky	Division of Purchases, Finance and Administration Cabinet.	construction projects	—WTO GPA (except Canada). —DR–CAFTA. —U.S.-Australia FTA. —U.S.-Chile FTA. —U.S.-Morocco FTA. —U.S.-Singapore FTA.
Louisiana	Executive branch agencies		—WTO GPA (except Canada). —DR–CAFTA. —U.S.-Australia FTA. —U.S.-Chile FTA. —U.S.-Morocco FTA. —U.S.-Singapore FTA.

States	Entities covered	Exclusions	Relevant international agreements
Maine	—Department of Administrative and Financial Services. —Bureau of General Services (covering state government agencies and school construction). —Department of Transportation.	construction-grade steel (including requirements on subcontracts); motor vehicles; coal.	—WTO GPA (except Canada). —U.S.-Australia FTA. —U.S.-Chile FTA. —U.S.-Singapore FTA.
Maryland	—Office of the Treasury. —Department of the Environment. —Department of General Services. —Department of Housing and Community Development. —Department of Human Resources. —Department of Licensing and Regulation. —Department of Natural Resources. —Department of Public Safety and Correctional Services. —Department of Personnel. —Department of Transportation.	construction-grade steel (including requirements on subcontracts); motor vehicles; coal.	—WTO GPA (except Canada). —DR–CAFTA. —U.S.-Australia FTA. —U.S.-Chile FTA. —U.S.-Morocco FTA. —U.S.-Singapore FTA.
Massachusetts	—Executive Office for Administration and Finance. —Executive Office of Communities and Development. —Executive Office of Consumer Affairs. —Executive Office of Economic Affairs. —Executive Office of Education. —Executive Office of Elder Affairs. —Executive Office of Environmental Affairs. —Executive Office of Health and Human Service. —Executive Office of Labor. —Executive Office of Public Safety. —Executive Office of Transportation and Construction.		—WTO GPA (except Canada). —U.S.-Chile FTA. —U.S.-Singapore FTA.
Michigan	Department of Management and Budget.	construction-grade steel (including requirements on subcontracts); motor vehicles; coal.	—WTO GPA (except Canada). —U.S.-Australia FTA. —U.S.-Chile FTA. —U.S.-Singapore FTA.
Minnesota	Executive branch agencies		—WTO GPA (except Canada). —U.S.-Chile FTA. —U.S.-Singapore FTA.
Mississippi	Department of Finance and Administration.	services	—WTO GPA (except Canada). —DR–CAFTA. —U.S.-Australia FTA. —U.S.-Chile FTA. —U.S.-Morocco FTA. —U.S.-Peru TPA. —U.S.-Singapore FTA.
Missouri	—Office of Administration —Division of Purchasing and Materials Management.		—WTO GPA (except Canada). —U.S.-Chile FTA. —U.S.-Singapore FTA.
Montana	Executive branch agencies	goods	—WTO GPA (except Canada). —U.S.-Chile FTA. —U.S.-Singapore FTA.
Nebraska	Central Procurement Agency		—WTO GPA (except Canada). —DR–CAFTA. —U.S.-Australia FTA. —U.S.-Chile FTA. —U.S.-Morocco FTA. —U.S.-Singapore FTA.
New Hampshire	Central Procurement Agency	construction-grade steel (including requirements on subcontracts), motor vehicles; coal.	—WTO GPA (except Canada). —DR–CAFTA. —U.S.-Australia FTA. —U.S.-Chile FTA. —U.S.-Morocco FTA. —U.S.-Singapore FTA.

States	Entities covered	Exclusions	Relevant international agreements
New York	—State agencies. —State university system. —Public authorities and public benefit corporations, with the exception of those entities with multi-state mandates.	construction-grade steel (including requirements on subcontracts); motor vehicles; coal; transit cars, buses and related equipment.	—WTO GPA (except Canada). —DR–CAFTA. —U.S.-Australia FTA. —U.S.-Chile FTA. —U.S.-Morocco FTA. —U.S.-Peru TPA. —U.S.-Singapore FTA.
North Dakota			—U.S.-EC Exchange of Letters (applies to EC Member States and only where the state considers out-of-state suppliers).
Oklahoma	Department of Central Services and all state agencies and departments subject to the Oklahoma Central Purchasing Act.	construction services; construction-grade steel (including requirements on subcontracts); motor vehicles; coal.	—WTO GPA (except Canada). —U.S.-Australia FTA. —U.S.-Chile FTA. —U.S.-Peru TPA. —U.S.-Singapore FTA.
Oregon	Department of Administrative Services.		—WTO GPA (except Canada). —DR–CAFTA (except Honduras). —U.S.-Australia FTA. —U.S.-Chile FTA. —U.S.-Morocco FTA. —U.S.-Singapore FTA.
Pennsylvania	Executive branch agencies, including: —Governor's Office. —Department of the Auditor General. —Treasury Department. —Department of Agriculture. —Department of Banking. —Pennsylvania Securities Commission. —Department of Health. —Department of Transportation. —Insurance Department. —Department of Aging. —Department of Correction. —Department of Labor and Industry. —Department of Military Affairs. —Office of Attorney General. —Department of General Services. —Department of Education. —Public Utility Commission. —Department of Revenue. —Department of State. —Pennsylvania State Police. —Department of Public Welfare. —Fish Commission. —Game Commission. —Department of Commerce. —Board of Probation and Parole. —Liquor Control Board. —Milk Marketing Board. —Lieutenant Governor's Office. —Department of Community Affairs. —Pennsylvania Historical and Museum Commission. —Pennsylvania Emergency Management Agency. —State Civil Service Commission. —Pennsylvania Public Television Network. —Department of Environmental Resources. —State Tax Equalization Board. —Department of Public Welfare. —State Employees' Retirement System. —Pennsylvania Municipal Retirement Board.	construction-grade steel (including requirements on subcontracts); motor vehicles; coal.	—WTO GPA (except Canada). —U.S.-Australia FTA. —U.S.-Chile FTA. —U.S.-Singapore FTA.

States	Entities covered	Exclusions	Relevant international agreements
	—Public School Employees' Retirement System. —Pennsylvania Crime Commission. —Executive Offices.		
Rhode Island	Executive branch agencies	boats, automobiles, buses and related equipment.	—WTO GPA (except Canada). —DR–CAFTA (except Honduras). —U.S.-Australia FTA. —U.S.-Chile FTA. —U.S.-Morocco FTA. —U.S.-Singapore FTA.
South Dakota	Central Procuring Agency (including universities and penal institutions).	beef	—WTO GPA (except Canada). —DR–CAFTA. —U.S.-Australia FTA. —U.S.-Chile FTA. —U.S.-Morocco FTA. —U.S.-Singapore FTA.
Tennessee	Executive branch agencies	Services; construction	—WTO GPA (except Canada). —U.S.-Australia FTA. —U.S.-Chile FTA. —U.S.-Singapore FTA.
Texas	Texas Building and Procurement Commission.		—WTO GPA (except Canada). —DR–CAFTA. —U.S.-Australia FTA. —U.S.-Chile FTA. —U.S.-Morocco FTA. —U.S.-Peru TPA. —U.S.-Singapore FTA.
Utah	Executive branch agencies		—WTO GPA (except Canada). —DR–CAFTA (except Honduras). —U.S.-Australia FTA. —U.S.-Chile FTA. —U.S.-Morocco FTA. —U.S.-Peru TPA. —U.S.-Singapore FTA.
Vermont	Executive branch agencies		—WTO GPA (except Canada). —DR–CAFTA. —U.S.-Australia FTA. —U.S.-Chile FTA. —U.S.-Morocco FTA. —U.S.-Singapore FTA.
Washington	Executive branch agencies, including: —General Administration. —Department of Transportation. —State Universities.	fuel; paper products; boats; ships; and vessels.	—WTO GPA (except Canada). —DR–CAFTA. —U.S.-Australia FTA. —U.S.-Chile FTA. —U.S.-Morocco FTA. —U.S.-Singapore FTA.
West Virginia			—U.S.-EC Exchange of Letters (applies to EC Member States and only where the state considers out-of-state suppliers).
Wisconsin	Executive branch agencies, including: —Department of Administration. —State Correctional Institutions. —Department of Development. —Educational Communications Board. —Department of Employment Relations. —State Historical Society. —Department of Health and Social Services. —Insurance Commissioner. —Department of Justice. —Lottery Board. —Department of Natural Resources. —Administration for Public Instruction.		—WTO GPA (except Canada). —U.S.-Chile FTA. —U.S.-Singapore FTA.

States	Entities covered	Exclusions	Relevant international agreements
Wyoming	—Racing Board. —Department of Revenue. —State Fair Park Board. —Department of Transportation. —State University System. —Procurement Services Division —Wyoming Department of Transportation. —University of Wyoming	construction-grade steel (including requirements on subcontracts); motor vehicles; coal.	—WTO GPA (except Canada). —DR–CAFTA. —U.S.-Australia FTA. —U.S.-Chile FTA. —U.S.-Morocco FTA. —U.S.-Singapore FTA.
Other sub-federal entities	**Entities covered**	**Exclusions**	**Relevant international agreements**
Puerto Rico	—Department of State —Department of Justice. —Department of the Treasury. —Department of Economic Development and Commerce. —Department of Labor and Human Resources. —Department of Natural and Environmental Resources. —Department of Consumer Affairs. —Department of Sports and Recreation.	construction services	—DR–CAFTA. —U.S.-Peru TPA.
Port Authority of New York and New Jersey.		restrictions attached to Federal funds for airport projects; maintenance, repair and operating materials and supplies.	—WTO GPA (except Canada). —U.S.-Chile FTA. —U.S.-Singapore FTA.
Port of Baltimore		restrictions attached to Federal funds for airport projects.	—WTO GPA (except Canada). —U.S.-Chile FTA. —U.S.-Singapore FTA.
New York Power Authority		restrictions attached to Federal funds for airport projects; conditions specified for the State of New York.	—WTO GPA (except Canada). —U.S.-Chile FTA. —U.S.-Singapore FTA.
Massachusetts Port Authority			U.S.-EC Exchange of Letters (applies to EC Member States and only where the Port Authority considers out-of-state suppliers).
Boston, Chicago, Dallas, Detroit, Indianapolis, Nashville, and San Antonio.			U.S.-EC Exchange of Letters (only applies to EC Member States and where the city considers out-of-city suppliers).
Other entities	**Entities covered**	**Exclusions**	**Relevant international agreements**
Rural Utilities Service (waiver of Buy American restriction on financing for all power generation projects).			—WTO GPA. —DR–CAFTA. —NAFTA. —U.S.-Australia FTA. —U.S.-Bahrain FTA. —U.S.-Chile FTA. —U.S.-Morocco FTA. —U.S.-Oman FTA. —U.S.-Peru TPA. —U.S.-Singapore FTA.
Rural Utilities Service (waiver of Buy American restriction on financing for telecommunications projects).			—NAFTA. —U.S.-Israel FTA.

General Exceptions: The following restrictions and exceptions are excluded from U.S. obligations under international agreements:

1. The restrictions attached to Federal funds to states for mass transit and highway projects.

2. Dredging.

The World Trade Organization Government Procurement Agreement (WTO GPA) Parties: Aruba, Austria, Canada, Belgium, Bulgaria, Cyprus, Czech Republic, Denmark, Estonia, Finland, France, Germany, Greece, Hong Kong, Hungary, Iceland, Ireland, Israel, Italy, Japan, Korea (Republic of), Latvia, Liechtenstein, Lithuania,

Luxembourg, Malta, Netherlands, Norway, Poland, Portugal, Romania, Singapore, Slovak Republic, Slovenia, Spain, Sweden, Switzerland, and United Kingdom.

The Free Trade Agreements and the respective Parties to the agreements are:

(1) Dominican Republic-Central America-United States Free Trade Agreement (DR–CAFTA): Costa Rica, Dominican Republic, El Salvador, Guatemala, Honduras, and Nicaragua;

(2) North American Free Trade Agreement (NAFTA): Canada and Mexico;

(3) United States-Australia Free Trade Agreement (U.S.-Australia FTA);

(4) United States-Bahrain Free Trade Agreement (U.S.-Bahrain FTA);

(5) United States-Chile Free Trade Agreement (U.S.-Chile FTA);

(6) United States-Israel Free Trade Agreement (U.S.-Israel FTA);

(7) United States-Morocco Free Trade Agreement (U.S.-Morocco FTA);

(8) United States-Oman Free Trade Agreement (U.S.-Oman FTA);

(9) United States-Peru Trade Promotion Agreement (U.S.-Peru TPA); and

(10) United States-Singapore Free Trade Agreement (U.S.-Singapore FTA).

United States-European Communities Exchange of Letters (May 30, 1995) (U.S.-EC Exchange of Letters) applies to EC Member States: Austria, Belgium, Bulgaria, Cyprus, Czech Republic, Denmark, Estonia, Finland, France, Germany, Greece, Hungary, Ireland, Italy, Latvia, Lithuania, Luxembourg, Malta, Netherlands, Poland, Portugal, Romania, Slovak Republic, Slovenia, Spain, Sweden, and United Kingdom.

Subpart C—Wage Rate Requirements Under Section 1606 of the American Recovery and Reinvestment Act of 2009

§ 176.180 Procedure.

The award official shall insert the standard award term in this Subpart in all awards funded in whole or in part with Recovery Act funds.

§ 176.190 Award term—Wage Rate Requirements under Section 1606 of the Recovery Act.

When issuing announcements or requesting applications for Recovery Act programs or activities that may involve construction, alteration, maintenance, or repair the agency shall use the award term described in the following paragraphs:

(a) Section 1606 of the Recovery Act requires that all laborers and mechanics employed by contractors and subcontractors on projects funded directly by or assisted in whole or in part by and through the Federal Government pursuant to the Recovery Act shall be paid wages at rates not less than those prevailing on projects of a character similar in the locality as determined by the Secretary of Labor in accordance with subchapter IV of chapter 31 of title 40, United States Code.

Pursuant to Reorganization Plan No. 14 and the Copeland Act, 40 U.S.C. 3145, the Department of Labor has issued regulations at 29 CFR parts 1, 3, and 5 to implement the Davis-Bacon and related Acts. Regulations in 29 CFR 5.5 instruct agencies concerning application of the standard Davis-Bacon contract clauses set forth in that section. Federal agencies providing grants, cooperative agreements, and loans under the Recovery Act shall ensure that the standard Davis-Bacon contract clauses found in 29 CFR 5.5(a) are incorporated in any resultant covered contracts that are in excess of $2,000 for construction, alteration or repair (including painting and decorating).

(b) For additional guidance on the wage rate requirements of section 1606, contact your awarding agency. Recipients of grants, cooperative agreements and loans should direct their initial inquiries concerning the application of Davis-Bacon requirements to a particular federally assisted project to the Federal agency funding the project. The Secretary of Labor retains final coverage authority under Reorganization Plan Number 14.

Subpart D—Single Audit Information for Recipients of Recovery Act Funds

§ 176.200 Procedure.

The award official shall insert the standard award term in this Subpart in all awards funded in whole or in part with Recovery Act funds.

§ 176.210 Award term—Recovery Act Transactions listed in Schedule of Expenditures of Federal Awards and Recipient Responsibilities for Informing Subrecipients.

The award term described in this section shall be used by agencies to clarify recipient responsibilities regarding tracking and documenting Recovery Act expenditures:

(a) To maximize the transparency and accountability of funds authorized under the American Recovery and Reinvestment Act of 2009 (Pub. L. 111–5) (Recovery Act) as required by Congress and in accordance with 2 CFR 215.21 "Uniform Administrative Requirements for Grants and Agreements" and OMB Circular A–102 Common Rules provisions, recipients agree to maintain records that identify adequately the source and application of Recovery Act funds. OMB Circular A–102 is available at *http://www.whitehouse.gov/omb/circulars/a102/a102.html.*

(b) For recipients covered by the Single Audit Act Amendments of 1996 and OMB Circular A–133, "Audits of States, Local Governments, and Non-Profit Organizations," recipients agree to separately identify the expenditures for Federal awards under the Recovery Act on the Schedule of Expenditures of Federal Awards (SEFA) and the Data Collection Form (SF–SAC) required by OMB Circular A–133. OMB Circular A–133 is available at *http://www.whitehouse.gov/omb/circulars/a133/a133.html.* This shall be accomplished by identifying expenditures for Federal awards made under the Recovery Act separately on the SEFA, and as separate rows under Item 9 of Part III on the SF–SAC by CFDA number, and inclusion of the prefix "ARRA-" in identifying the name of the Federal program on the SEFA and as the first characters in Item 9d of Part III on the SF–SAC.

(c) Recipients agree to separately identify to each subrecipient, and document at the time of subaward and at the time of disbursement of funds, the Federal award number, CFDA number, and amount of Recovery Act funds. When a recipient awards Recovery Act funds for an existing program, the information furnished to subrecipients shall distinguish the subawards of incremental Recovery Act funds from regular subawards under the existing program.

(d) Recipients agree to require their subrecipients to include on their SEFA information to specifically identify Recovery Act funding similar to the requirements for the recipient SEFA described above. This information is needed to allow the recipient to properly monitor subrecipient expenditure of ARRA funds as well as oversight by the Federal awarding agencies, Offices of Inspector General and the Government Accountability Office.

[FR Doc. E9–9073 Filed 4–22–09; 8:45 am]

BILLING CODE P

DEPARTMENT OF AGRICULTURE

Agricultural Marketing Service

7 CFR Part 984

[Doc. No. AO–192–A7; AMS–FV–07–0004; FV06–984–1 C]

Walnuts Grown in California; Order Amending Marketing Order No. 984; Correcting Amendment

AGENCY: Agricultural Marketing Service, USDA.

ACTION: Final rule; correcting amendment.

City of Hattiesburg, MS

200 Forrest St.
P.O. Box 1898
Hattiesburg, MS 39401

Master

File Number: 2012-1291

File ID:	2012-1291	**Type:**	Regular Agenda Item	**Status:**	Passed
Version:	1	**Reference:**		**In Control:**	City Council
				File Created:	10/30/2012
Brief Title:	Approve Acquisition and Relocation Policy for the Broadway-Mobile Traffice Enhancement project and accept letter of Representation engaging Jackson, Bowman, & Arrington, PLLC to provide legal services for project.			**Final Action:**	11/06/2012
				Minute Book Number:	MB2012-1/382-383

Title:

Approve Acquisition and Relocation Policy for the property to be obtained for the Broadway-Mobile Traffic Enhancement project (Project No. STP-0018-00-(029) LPA 106346-701000), and accept Letter of Representation engaging Jackson, Bowman, & Arrington, PLLC, to perform legal service required for acquisition of property, easements, and/or right of ways.

Notes: MDOT Grant 80/20 Match

Sponsors:		**Enactment Date:**	
Attachments:	Jackson Legal Contract	**Enactment Number:**	
Contact:		**Meeting Date:**	11/06/2012
Drafter:	Sharon Waits	**Effective Date:**	

History of Legislative File

Version:	Acting Body:	Date:	Action:	Sent To:	Due Date:	Return Date:	Result:
1	City Council	11/06/2012	Approve				Pass

Action Text: A MOTION was made by Council Member Naylor and seconded by Vice President Ware to Approve Acquisition and Relocation Policy for the property to be obtained for the Broadway-Mobile Traffic Enhancement project (Project No. STP-0018-00-(029) LPA 106346-701000), and accept Letter of Representation engaging Jackson, Bowman, & Arrington, PLLC, to perform legal service required for acquisition of property, easements, and/or right of ways.

There being no discussion, the Motion received the affirmative vote of the Council as follows:

Yeas: 5 - Bradley, Delgado, Carroll, Ware and Naylor

Nays: 0

Yea:	5	President Bradley Council Member Delgado Council Member Carroll Vice President Ware Council Member Naylor
TEL-No Vote:	0	

Text of Legislative File 2012-1291

Title

Approve Acquisition and Relocation Policy for the property to be obtained for the Broadway-Mobile Traffic Enhancement project (Project No. STP-0018-00-(029) LPA 106346-701000), and accept Letter of Representation engaging Jackson, Bowman, & Arrington, PLLC, to perform legal service required for acquisition of property, easements, and/or right of ways.

Summary

Approve Acquisition and Relocation Policy for the property to be obtained for the Broadway-Mobile Traffic Enhancement project (Project No. STP-0018-00-(029) LPA 106346-701000), and accept Letter of Representation engaging Jackson, Bowman, & Arrington, PLLC, to perform legal service required for acquisition of property, easements, and/or right of ways.

Budget Information

Hourly Contract

Expenditure Type

MDOT Grant 80/20 match

Purchasing Item

Regular Purchase

Publication Information

JACKSON, BOWMAN & ARRINGTON, PLLC

ATTORNEYS AT LAW
309 SOUTH 40TH AVENUE
HATTIESBURG, MISSISSIPPI 39402

ROBERT T. JACKSON, SR.
ROBERT T. JACKSON, JR.
JEFF CORBETT BOWMAN
DEREK R. ARRINGTON
D. NATHAN SMITH

MAILING ADDRESS:
P. O. BOX 15517
HATTIESBURG, MS 39404-5517

TELEPHONE: (601) 264-3309
FACSIMILE: (601) 264-6044
E-mail: rtjjr@jacksonfirm.com

October 18, 2012

Mr. Bert R. Kuyrkendall, P.E.
City of Hattiesburg
P. O. Box 1898
Hattiesburg, MS 39403-1898

Re: Project Number STP-0018-00-(029)LPA/106346-701000
Landscape and Pedestrian Improvements for Multiple Routes
(Broadway and Mobile Streets) Hattiesburg, Mississippi

Dear Mr. Kuyrkendall:

It is our understanding that the City of Hattiesburg is in preliminary stages of plans for Project Number STP-0018-00-(029)LPA/106346-701000 for landscape and pedestrian improvements for multiple routes (Broadway and Mobile Streets).

Please accept this correspondence as our firm's engagement letter to the City of Hattiesburg in connection with the above referenced project. If we are retained, it is our understanding that as federal funds are impacted, the acquisition procedures must conform to the Mississippi Real Property Acquisition Policies Law, Miss. Code Annotated Section 43-37-1, *et. seq*, and the Uniform Relocation Assistance and Real Property Acquisition for Federal and Federally Assisted Programs at Chapter 49 Section 24.1 of the Code of Federal Regulations. Further, due to the fact that federal funds are impacted, the City is required to adopt an acquisition and relocation policy as part of this project. We have prepared the enclosed Acquisition and Relocation Policy for this Project. If we are engaged and if this Policy this meets with your approval, we ask that you present the enclosed to the City Council for approval.

Based on the above, it is our understanding that our firm will provide legal services including title investigation, preparation of title documents, orchestrating appraisals of land impacted by the project, reviewing said appraisals and appraisal reviews, contacting impacted land owners, updating title documents, conducting closings, and any required eminent domain litigation.

For said services, our firm will charge One Hundred Fifty Dollars ($150.00) per hour for all legal services provided through our firm. Additionally, incidental expenses such as copies, postage, recording fees, court costs, etc., will be charged at cost.

Should we be retained we plan to utilize Collins & Null Appraisals, Inc. for appraisals of real property and John B. "Jeb" Stewart for appraisal review. We would anticipate their fees being shown as a reimbursable expense along with our fee statements. If this is acceptable to the City, we will submit their engagement letters under separate cover.

We appreciate your consideration of our firm and value the trust placed upon us. Our objective would be to efficiently complete this project for you in compliance with federal and state law and do so at the lowest possible costs. It is also our objective to do so in order to insure continued federal funding for not only this project, but also for those the City initiates in the future.

With best regards,

Very truly yours,

JACKSON, BOWMAN & ARRINGTON, PLLC

Robert T. Jackson, Jr.

RTJjr:jpp

Enclosures

ACQUISITION AND RELOCATION POLICY

The Landscape and Pedestrian Improvement Project for multiple routes (Broadway and Mobile)(Project No.STP-0018-00-(029)LPA/106346-701000) is part of an overall plan to improve the landscaping and multiple pedestrian routes in and around downtown Hattiesburg in the areas of Broadway and Mobile Streets and to allow for economic development in the City of Hattiesburg. Real property acquisition is necessary in order to accomplish these goals.

I. PURPOSE AND BACKGROUND

This Acquisition policy is intended to establish procedures for acquiring real property by the City of Hattiesburg ("City") for projects funded in whole or part with federal funds. This policy is intended to ensure that all acquisition is handled on a fair and equitable basis and in accordance with a uniform set of procedures.

Chapter 49 Section 24.1 of the Code of Federal Regulations ("49 C.F.R. § 24.1") statutorily outlines the Uniform Relocation Assistance and Real Property Acquisition for Federal and Federally-Assisted Programs. All property to be acquired by the City for any purpose permitted under State Law will be acquired in accordance with the provisions of the Uniform Relocation Assistance and Real Property Acquisition Policies Act of 1970, as amended ("URA") and in accordance with the laws of the State of Mississippi.

The URA is triggered by the acquisition of real property, the displacement of persons, and has been expanded to include the acquisition of temporary easements as well. By virtue of this project, the City does not intend to relocate or displace any person in association with the acquisition process; however, in the unlikely event of displacement, the City shall act in accordance with the relocation procedures set forth in the URA.

A description of the project area and a map of the area shall be on file in City Hall.

II. INVOLUNTARY or VOLUNTARY

The acquisition of real property may be made through voluntary or involuntary means. Under the URA an acquisition is generally considered involuntary when an agency acquires property under threat or use of eminent domain.

What makes a transaction "voluntary"?

- No specific site is needed and any of several properties could be acquired for project purposes.
- The property is not part of an intended, planned or designated project area where other properties will be acquired within specific time limits.

- The agency informs the owner in writing of the property's market value.
- The agency informs the owner in writing that the property will not be acquired through condemnation if negotiations do not reach an amicable agreement.

To determine if the proposed acquisition may be considered a "voluntary acquisition" under the URA, the City will refer to the URA regulations to ensure all applicable criteria and requirements for a voluntary acquisition found in 49 C.F.R. Part 24.101(b)(1)-(5).

III. INVOLUNTARY ACQUISITION

A. Notice To Owner

Following the adoption of the acquisition and relocation policy, the owner will be notified in writing of the City's interest in acquiring the property[1]. This shall not apply to parcels upon which acquisition was begun prior to the adoption of this policy. This acquisition notice usually serves as an agency's initial written communication to an owner whose property may be acquired for a federally funded project under threat or use of eminent domain. The "Notice to Owner" will set forth minimum rights and protections afforded to property owners under the URA and will include a copy of the informational brochure, "When A Public Agency Acquires Your

[1] 49 C.F.R. §24.102(b)

Property". A copy of the notice and brochure is attached as "Exhibit A."

B. Appraisal of Property

1. Appraisal - Before the initiation of negotiations, the property to be acquired shall be appraised, except where an appraisal is not required. An appraisal is not required if the owner is donating the property and releases the City from its obligation to appraise the property; or if the City determines that an appraisal is unnecessary because the valuation problem is uncomplicated and the anticipated value of the proposed acquisition is estimated at $10,000 or less[2].

2. Waiver Valuations - If the City determines that an appraisal is unnecessary because the transaction is uncomplicated and the anticipated value of the property is less than $10,000, the City shall adopt written procedures for use of waiver valuations which shall be considered a part of these procedures for all purposes.

3. Invitation To Owner - If the property is to be appraised the owner shall be provided an opportunity to accompany the Appraiser during the inspection of the property.

[2] 49 C.F.R. §24.102(c)(2)(i) and (ii)

When conducting a waiver valuation, the City is not obligated to invite the property owner to accompany during the waiver valuation determination.

4. Review Appraisal - All appraisals of real property will be reviewed by a qualified Review Appraiser, in accordance with 49 C.F.R. § 24.104. The review appraiser shall certify in writing to the City his/her recommendation or approved value of the property. The certification will identify the appraisal report reviewed and explain the basis for such recommendation or approval. In the event that the Review Appraiser does not concur with the original appraisal, and the Appraiser and Review Appraiser can not agree on a value, the Review Appraiser may be asked to prepare a complete appraisal[3].

5. Appraiser Qualifications - The City has reviewed the experience, education, training, certification/licensing, designation(s) and other qualifications of appraisers and review appraisers as set forth by the Mississippi Appraisal Board. Attached hereto and incorporated herein as "Exhibit B" is a document entitled "AQB/MAB Education, Experience & Exam Requirements for Licensing" published by said Board, and which has been reviewed by the City.

[3] 49 C.F.R. §24.104(b)(2) and §24.103

Any appraiser or review appraiser involved in this project shall be at least a certified residential appraiser licensed according to the requirements of the Mississippi Appraisal Board, except when otherwise prohibited by the Uniform Standards of Appraisal Practice, and then, in such case, the appraiser or review appraiser shall be a certified general appraiser.

C. Establishment of Just Compensation

Before initiation of negotiations with the owner, the City will establish an amount it believes is just compensation for the real property to be acquired[4]. The amount established shall not be less than the approved appraisal of fair market value of the property or the Review Appraiser's recommended fair market value or the amount determined through the waiver valuation process.

D. Offer To Owner

The City shall make a written offer to the owner to acquire the property for the full amount believed to be just compensation. Along with the formal offer, the owner shall be given the following supporting documentation:

[4] 49 C.F.R. §24.102(d)

1. Summary Statement - Along with the initial written purchase offer, the owner shall be given a written statement of the basis for the offer of just compensation.

   a. A statement of the amount offered as just compensation. In the case of a partial acquisition, the compensation for the real property to be acquired and the compensation for damages, if any, to the remaining real property shall be separately stated[5].

   b. A description and/or location identification of the real property and the interest in the real property to be acquired[6].

   c. An identification of the buildings, structures, and other improvements (including building equipment and trade fixtures), which are considered to be part of the real property for which the offer of just compensation is made. Where appropriate, the statement shall identify any separately held ownership interest in the property, e.g., a tenant-

[5] 49 C.F.R. §24.102(e)(1)
[6] 49 C.F.R. §24.102(e)(2)

owned improvement, and indicate that such interest is not covered by the offer.

E. Basic Negotiation Procedures

The City will make reasonable efforts to contact the owner or the owner's representative and discuss its offer to purchase the property, including the basis for the offer of just compensation. Whenever feasible, personal face-to-face contact and discussion shall take place with the property owner. The City will explain the basic acquisition policies and procedures that apply including payment of incidental expenses. The owner will be given not less than ten (10) days to consider the offer and present material which the owner believes is relevant to determining the value of the property and to suggest modifications in the proposed terms and conditions of the purchase. The City shall consider any relevant information presented by the owner.

F. Updating Offer of Just Compensation

If the information presented by the owner or a material change in the character or condition of the property indicates the need for new appraisal information, or if a significant delay has occurred since the time of the appraisal(s) of the property, and it is possible that a material increase in the value of the property has occurred, the City will have the appraisal(s) updated or obtain a new appraisal(s). If the latest appraisal information indicates

that a change in the proposed offer is warranted, the City will promptly re-establish just compensation and offer that amount to the owner in writing[7].

G. Acceptance/Rejection

If the landowner accepts the value presented by the City as just compensation, the City may close on the acquisition transaction. If, however, the land owner and the City are unable to reach an agreement as to the value of the purchase price, administrative settlements may be used as a means to "encourage and expedite acquisition by agreement[8]." If the property owner is unwilling to sell his property at a fair value, the City may have to exercise its eminent domain power through condemnation and allow a Court to determine just compensation for the property.

H. Administrative Settlements

Administrative settlements may be considered when reasonable efforts to negotiate an agreement at the amount offered have failed and a settlement would be deemed reasonable, prudent, and in the public interest. As a result, the purchase price for the property may exceed the amount originally offered as just compensation. A written justification explaining the basis for the settlement shall be included in the City's files.

---

[7] 49 C.F.R. §24.102(g)

[8] 49 C.F.R. §24.102

I. Condemnation

If the property owner is unwilling to sell his property at a fair value, the City may have to exercise its eminent domain power through condemnation and allow a Court to determine just compensation for the property.

J. Payment Before Taking Possession

Before requiring the owner to surrender possession of the real property, the City will pay the agreed purchase price to the owner, or in the case of condemnation, deposit with the Court, for the benefit of the owner, an amount not less than the just compensation as determined by the City or the Court award of compensation in the condemnation proceeding for the property[9].

K. Coercive Action

The City shall not advance the time of condemnation, defer negotiations or condemnation or the depositing of funds with the Court, or take any other coercive action in order to induce an agreement on the price to be paid for the property[10].

L. Quick-Take Powers

Where authorized by State law, the City may exercise its quick-take powers.

---

[9] 49 C.F.R. §24.102(j)

[10] 49 C.F.R. §24.102(h)

M. Uneconomic Remnant

If the acquisition of only a portion of a property would leave the owner with an uneconomic remnant, the City shall offer to acquire the uneconomic remnant along with the portion of the property needed for the project. For purposes of this requirement, the term "uneconomic remnant" means a parcel of real property in which the owner is left with an interest after the partial acquisition of the owner's property, which has little or no value or utility to the owner, as determined by the City[11].

N. Inverse Condemnation

If the City intends to acquire any interest in real property by exercise of the power of eminent domain, it shall institute formal condemnation proceedings and not intentionally make it necessary for the owner to institute legal proceedings to prove the fact of the taking of the real property[12]. When property is taken without payment of just compensation the result is inverse condemnation.

O. Incidental Expenses

The property owner shall be reimbursed for all reasonable expenses allowed under 49 C.F.R. § 24.106 he necessarily incurs during the acquisition process[13]. Whenever feasible, the City shall pay these

[11] 49 C.F.R. §24.102(k)
[12] 49 C.F.R. §24.102(l)
[13] 49 C.F.R. §24.106(a)

costs directly to the billing agent so that the owner will not have to pay such costs and then seek reimbursement from the City[14]. The City is not required to pay costs solely required to perfect the owner's title[15].

P. Certain Litigation Expenses

Pursuant to 49 C.F.R. §24.107, the owner of the real property shall be reimbursed for any reasonable expenses, including reasonable attorney, appraisal, and engineering fees, which the owner actually incurred because of condemnation proceedings if:

1. The final judgment of the Court is that the City cannot acquire the property by condemnation[16]; or

2. The condemnation proceeding is abandoned by the City other than under an agreed upon settlement[17]; or

3. The Court having jurisdiction renders a judgment in favor of the owner in an inverse condemnation proceeding or the City effects a settlement of such proceedings[18].

[14] 49 C.F.R. §24.106(a)(3)(b)
[15] 49 C.F.R. §24.106(a)(1)
[16] 49 C.F.R. §24.107(a)
[17] 49 C.F.R. §24.107(b)
[18] 49 C.F.R. §24.107(c)

Q. Donations

An owner whose real property is being acquired may, after being fully informed by the City of the right to receive just compensation for such property, donate all or any part thereof, any interest therein, or any compensation paid therefore, to the City as such owner shall determine[19]. The City is responsible for ensuring that an appraisal of the real property is obtained unless the owner releases the Authority from such obligation, except as provided in 49 C.F.R. §24.102(c)(2).

R. Property Owner With Conflict of Interest

1. Policy - A conflict of interest exists whenever the owner of an interest in real property that is to be acquired by the City serves as an official or agent of the City or exercises any other responsible function in connection with the project involving the acquisition. The City has established safeguards to prohibit employees, officials, or agents from using their positions for a purpose that is or gives the appearance of being motivated by a desire for private gain for themselves or others, particularly those with whom they have family, business, or other ties.

[19] 49 C.F.R. §24.108

2. Safeguards - The City has established the following safeguards to prevent the possibility of undue personal enrichment by owners who may be in a conflict of interest position:

a. Disclosure - the City will require disclosure of any potential conflict of interest in writing to the City's governing body and to the City's legal counsel.

b. MDOT Price concurrence - The City may request MDOT to review the appraisal and the determination of just compensation and concur in the proposed and final acquisition prices.

c. Condemnation - The City may acquire the property through condemnation and let the Court determine just compensation for the property. This is especially appropriate if the owner is unwilling to sell his or her property for its appraised market value.

3. Appraisals

a. The Appraiser, Review Appraiser or person performing the waiver valuation shall not have any interest,

direct or indirect, in the real property being valued for the Authority.

b. Compensation for making an appraisal or waiver valuation shall not be based on the amount of the valuation estimate.

c. No person shall attempt to unduly influence or coerce an Appraiser, Review Appraiser, or waiver valuation preparer regarding any valuation or other aspect of an appraisal, review or waiver valuation. Persons functioning as negotiators may not supervise or formally evaluate the performance of any Appraiser or Review Appraiser performing appraisal or appraisal review work, except that, for a program or project receiving Federal financial assistance, the Federal funding Agency may waive this requirement if it determines it would create a hardship for the Authority.

Conflicts With State Law

If this policy in any way conflicts with State Law, State Law will prevail.

When a Public Agency Acquires Your Property

Introduction

This booklet describes important features of the **Uniform Relocation Assistance and Real Property Acquisition Policies Act of 1970**, as amended (URA) and provides general information about public acquisition of real property (real estate) that should be useful to you.

Most acquisitions of real property by a public agency for a Federal project or a project in which Federal funds are used are covered by the URA. If you are notified that your property will be acquired for such a project, it is important that you learn your rights under this important law.

This booklet may not answer all of your questions. If you have more questions about the acquisition of your property, contact the Agency responsible for the project. (Check the back of this booklet for the name of the person to contact at the Agency.) Ask your questions before you sell your property. Afterwards, it may be too late.

General Questions

What Right Has Any Public Agency To Acquire My Property?

The Federal Government and every State government have certain powers which are necessary for them to operate effectively. For example, they have the power to levy taxes and the power to maintain order. Another government power is the power to acquire private property for public purposes. This is known as the power of eminent domain.

The rights of each of us are protected, however, by the Fifth and Fourteenth Amendments of the U.S. Constitution and by State constitutions and eminent domain laws which guarantee that if a public agency takes private property it must pay "just compensation" to the owner. The URA provides additional protections, as explained in this booklet.

Who Made The Decision To Buy My Property?

The decision to acquire a property for a public project usually involves many persons and many determinations. The final determination to proceed with the project is made only after a thorough review which may include public hearings to obtain the views of interested citizens.

If you have any questions about the project or the selection of your property for acquisition, you should ask a representative of the Agency which is responsible for the project.

How Will The Agency Determine How Much To Offer Me For My Property?

Before making you an offer, the Agency will obtain at least one appraisal of your property by a competent real property appraiser who is familiar with local property values. The appraiser will inspect your property and prepare a report that includes his or her professional opinion of its current fair market value. After the appraiser has completed his work, a review appraiser will examine the appraisal report to assure that the estimate is fair and the work conforms with professional appraisal standards.

The Agency must offer you "just compensation" for your property. This amount cannot be less than the appraised fair market value of the property. "Just compensation" for your property does not take into account your relocation needs. If you are eligible for relocation assistance, it will be additional.

What is Fair Market Value?

Fair market value is sometimes defined as that amount of money which would probably be paid for a property in a sale between a willing seller, who does not have to sell, and a willing buyer, who does not have to buy. In some areas a different term or definition may be used.

ALL-STATE LEGAL®
EXHIBIT
"A"

The fair market value of a property is generally considered to be "just compensation." Fair market value does not take into account intangible elements such as sentimental value, good will, business profits, or any special value that your property may have for you or for the Agency.

How Does An Appraiser Determine The Fair Market Value Of My Property?

Each parcel of real property is different and therefore no single formula can be devised to appraise all properties. Among the factors an appraiser typically considers in estimating the value of real property are:

- How it compares with similar properties in the area that have been sold recently.
- How much rental income it could produce.
- How much it would cost to reproduce the buildings and other structures, less any depreciation.

Will I Have A Chance To Talk To The Appraiser?

Yes. You will be contacted and given the opportunity to accompany the appraiser on his or her inspection of your property. You may then inform the appraiser of any special features which you believe may add to the value of your property. It is in your best interest to provide the appraiser with all the useful information you can in order to insure that nothing of allowable value will be overlooked. If you are unable to meet with the appraiser, you may wish to have a person who is familiar with your property represent you.

How Soon Will I Receive A Written Purchase Offer?

Generally, this will depend on the amount of work required to appraise your property. In the case of a typical single-family house, it is usually possible to make a written purchase offer within 45 to 60 days of the date an appraiser is selected to appraise the property.

Promptly after the appraisal has been reviewed (and any necessary corrections obtained), the Agency will determine just compensation and give you a written purchase offer in that amount along with a "summary statement," explaining the basis for the offer. No negotiations are to take place before you receive the written purchase offer and summary statement.

What Is In The Summary Statement Of The Basis For The Offer Of Just Compensation?

The summary statement of the basis for the offer of just compensation will include:

- An accurate description of the property and the interest in the property to be acquired.
- A statement of the amount offered as just compensation. (If only part of the property is to be acquired, the compensation for the part to be acquired and the compensation for damages, if any, to the remaining part will be separately stated.)
- A list of the buildings and other improvements covered by the offer. (If there is a separately held interest in the property not owned by you and not covered by the offer (e.g., a tenant-owned improvement), it will be so identified.)

Must I Accept The Agency's Offer?

No. You are entitled to present your evidence as to the amount you believe is the fair market value of your property and to make suggestions for changing the terms and conditions of the offer. The Agency will consider your evidence and suggestions. When fully justified by the available evidence of value, the offer price will be increased.

May Someone Represent Me During Negotiations?

Yes. If you would like an attorney or anyone else to represent you during negotiations, please inform the Agency. However, the URA does not require the Agency to pay the costs of such representation.

If I Reach Agreement With The Agency, How Soon Will I Be Paid?

If you reach a satisfactory agreement to sell your property and your ownership (title to the property) is clear, payment will be made at a mutually acceptable time. Generally, this should be possible within 30 to 60 days after you sign a purchase contract. If the title evidence obtained by the Agency indicates that further action is necessary to show that your ownership is clear, you may be able to hasten the payment by helping the Agency obtain the necessary proof. (Title evidence is basically a legal record of the ownership of the property. It identifies the owners of record and lists the restrictive deed covenants and recorded mortgages, liens, and other instruments affecting your ownership of the property.)

What Happens If I Don't Agree To The Agency's Purchase Offer?

If you are unable to reach an agreement through negotiations, the Agency may file a suit in court to acquire your property through an eminent domain proceeding. Eminent domain proceedings are often called condemnations. If your property is to be acquired by condemnation, the Agency will file the condemnation suit without unreasonable delay.

An Agency may also decide not to buy your property, if it cannot reach agreement on a price, and find another property to buy instead.

What Happens After The Agency Condemns My Property?

You will be notified of the action. Condemnation procedures vary, and the Agency will explain the procedures which apply in your case.

Generally, when an Agency files a condemnation suit, it must deposit with the court (or in an escrow account) an amount not less than its appraisal of the fair market value of the property. You should be able to withdraw this amount, less any amounts necessary to pay off any mortgage or other liens on the property and to resolve any special ownership problems. Withdrawal of your share of the money will not affect your right to seek additional compensation for your property.

During the condemnation proceeding, you will be provided an opportunity to introduce your evidence as to the value of your property. Of course, the Agency will have the same right. After hearing the evidence of all parties, the court will determine the amount of just compensation. If that amount exceeds the amount deposited by the Agency, you will be paid the difference, plus any interest that may be provided by law.

To help you in presenting your case in a condemnation proceeding, you may wish to employ an attorney and an appraiser. However, in most cases the costs of these professional services and other costs which an owner incurs in presenting his or her case to the court must be paid by the owner.

What Can I Do If I Am Not Satisfied With The Court's Determination?

If you are not satisfied with the court judgment, you may file an appeal with the appropriate appellate court for the area in which your property is located. If you are considering an appeal, you should check on the applicable time limit for filing the appeal and consult with your attorney on whether you have a basis for the appeal. The Agency may also file an appeal if it believes the amount of the judgment is too high.

Will I Have To Pay Any Closing Costs?

You will be responsible for the payment of the balance on any mortgage and other liens on your property. Also, if your ownership is not clear, you may have to pay the cost of clearing it. But the Agency is responsible for all reasonable and necessary costs for:

- Typical legal and other services required to complete the sale, recording fees, revenue stamps, transfer taxes and any similar expenses which are incidental to transferring ownership to the Agency.
- Penalty costs and other charges related to prepayment of any recorded mortgage on the property

that was entered into in good faith.

- Real property taxes covering the period beginning on the date the Agency acquires your property.

Whenever possible, the Agency will make arrangements to pay these costs directly. If you must incur any of these expenses yourself, you will be repaid--usually at the time of closing. If you later discover other costs for which you should be repaid, you should request repayment from the Agency immediately. The Agency will assist you in filing a claim. Finally, if you believe that you were not properly repaid, you may appeal the decision to the Agency.

May I Keep Any Of The Buildings Or Other Improvements On My Property?

Very often, many or all of the improvements on the property are not required by the Agency. This might include such items as a fireplace mantel, your favorite shrubbery,
or even an entire house. If you wish to keep any improvements, please let the Agency know as soon as possible.

If you do arrange to keep any improvement, the Agency will deduct only its salvage value from the purchase price you would otherwise receive. (The salvage value of an item is its probable selling price if offered for sale on the condition that the buyer will remove it at his or her own expense.) Of course, if you arrange to keep any real property improvement, you will not be eligible to receive a relocation payment for the cost of moving it to a new location.

Can The Agency Take Only A Part Of My Property?

Yes. But if the purchase of only a part of your property reduces the value of the remaining part(s), you will be paid for the loss in value. Also, if any remaining part would have little or no utility or value to you, the Agency will offer to buy that remaining part from you.

Occasionally, a public project will increase the value of the part which is not acquired by the Agency. Under some eminent domain laws, the amount of such increase in value is deducted from the purchase payment the owner would otherwise receive.

Will I Have To Pay Rent To The Agency After My Property Is Acquired?

If you remain on the property after the acquisition, you may be required to pay a fair rent to the Agency. Such rent will not exceed that charged for the use of comparable properties in the area.

How Soon Must I Move?

If possible, a mutually agreeable date for the move will be worked out. Unless there is an urgent need for your property (e.g., your occupancy would present a health or safety emergency), you will not be required to move without at least 90 days advance written notice.

If you reach a voluntary agreement to sell your property, you will not be required to move before you receive the agreed purchase price. If the property is acquired by condemnation, you cannot be required to move before the estimated fair market value of the property has been deposited with the court so that you can withdraw your share.

If you are being displaced from your home, you will not be required to move before a comparable replacement home is available to you.

Will I Receive Relocation Assistance?

Title II of the URA requires that certain relocation payments and other assistance must be provided to families, individuals, businesses, farms, and nonprofit organizations when they are displaced or their personal property must be moved as a result of a project that is covered by the URA.

The Agency will furnish you a full explanation of any relocation assistance to which you may be entitled. If you have any questions about such assistance, please contact the Agency. In order for the Agency to fulfill its relocation obligations to you, you must keep the Agency informed of your plans.

My Property Is Worth More Now. Must I Pay Capital Gains Tax On The Increase?

Internal Revenue Service (IRS) Publication 544 explains how the Federal income tax would apply to a gain or loss resulting from the sale or condemnation of real property, or its sale under the threat of condemnation, for public purposes. If you have any questions about the IRS rules, you should discuss. your particular circumstances with your personal tax advisor or your local IRS office.

I'm A Veteran. How About My VA Loan?

After your VA home mortgage loan has been repaid, you will be permitted to obtain another VA loan to purchase another property. Check on such arrangements with your nearest Veterans Administration Office.

Is It Possible To Donate Property?

Yes. You may donate your property or sell it to the Agency for less than its fair market value. The Agency must obtain an appraisal of the property and offer just compensation for it, unless you release the Agency from these obligations.

Additional Information

If you have any questions after reading this booklet, contact the Agency and discuss your concerns with the Agency representative.

Agency: City of Hattiesburg

Person(s) to Contact: Jackson, Bowman & Arrington, PLLC
Attn: Robert T. Jackson, Jr., or
Derek R. Arrington
Post Office Box 15517
Hattiesburg, MS 39404-5517
Phone: (601) 264-3309

AQB/MAB EDUCATION, EXPERIENCE & EXAM REQUIREMENTS FOR LICENSING

1/1/2008 – Education, Experience & Exam Requirements

EDUCATION, EXPERIENCE & EXAMINATION REQUIREMENTS FOR AN APPRAISER INTERN, A LICENSED APPRAISER (TRACK ONE & TRACK TWO), A CERTIFIED RESIDENTIAL APPRAISER AND A CERTIFIED GENERAL REAL ESTATE APPRAISER.

APPRAISER INTERN

Education:	75 hours of AQB 2008 required appraisal courses, to include a 15-hour National USPAP course
Experience:	None required
Examination:	No

LICENSED REAL ESTATE APPRAISER (TRACK ONE)

Education:	150 hours of AQB 2008 required appraisal courses, to include a 15-hour National USPAP course
Experience:	1000 hours gained over a minimum of 6 months
Examination:	Yes – National Exam & MAB License Law Exam

LICENSED REAL ESTATE APPRAISER (TRACK TWO)

Experience:	150 hours of AQB 2008 required appraisal courses, to include a 15-hour National USPAP course completed within 12 months of application
Experience:	None required
Examination:	Yes – National Exam & MAB License Law Exam

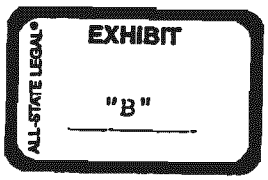

CERTIFIED RESIDENTIAL APPRAISER

Education:	200 hours of AQB 2008 required appraisal courses, to include a 15-hour National USPAP course completed within 60 months of application; Associate degree or higher or twenty-one (21) semester credit hours covering required college courses from an accredited college or university.
Experience:	2500 hours gained over a minimum of 24 months
Examination:	Yes – National Exam & MAB License Law Exam

CERTIFIED GENERAL APPRAISER

Education:	300 hours of AQB 2008 required appraisal courses, to include a 15-hour National USPAP course completed within 60 months months of application; Bachelors degree or higher or thirty (30) semester credit hours covering required college courses from an accredited college or university.
Experience:	3000 hours gained over a minimum of 30 months
Examination:	Yes - National Exam & MAB License Law Exam

GENERAL INFORMATION

All coursework must be obtained from an accredited Community College, College or University or from a MAB approved private Provider. The USPAP course must be conducted by an approved USPAP instructor. Education hours are cumulative. For example, the 75 hours for an Appraiser Intern will count toward the 150 hours required for a Licensed Appraiser, and so forth.

Further information can be found under Rules II, III and XI of the Mississippi Real Estate Appraiser Licensing and Certification Act.

City of Hattiesburg, MS

200 Forrest St.
P.O. Box 1898
Hattiesburg, MS 39401

Master

File Number: 2012-1318

File ID:	2012-1318	**Type:**	Regular Agenda Item	**Status:**	Passed
Version:	1	**Reference:**		**In Control:**	City Council
				File Created:	10/30/2012
Brief Title:	Approve Amendment No. 1 to the Memorandum of Agreement between the City and USA Yeast; authorize Mayor to execute same.			**Final Action:**	11/06/2012
				Minute Book Number:	MB2012-1/383

Title:

Approve Amendment No. 1 to the Memorandum of Agreement (MOA) between the City of Hattiesburg and USA Yeast, entered into on or about December 15, 2011, to amend the term of the agreement to June 1, 2015; authorize Mayor to execute same in triplicate.

Notes:

Sponsors:		**Enactment Date:**	
Attachments:	Amendment No 1 to Memorandum of Agreement (MOA) between City and USA Yeast (01453337), executed Amendment No 1 to Memorandum of Agreement (MOA) between City and USA Yeast (01453337)	**Enactment Number:**	
Contact:		**Meeting Date:**	11/06/2012
Drafter:	Sharon Waits	**Effective Date:**	

History of Legislative File

Version:	Acting Body:	Date:	Action:	Sent To:	Due Date:	Return Date:	Result:
1	City Council	11/06/2012	Approve				Pass

Action Text: A MOTION was made by Council Member Naylor and seconded by Council Vice President Ware to Approve Amendment No. 1 to the Memorandum of Agreement (MOA) between the City of Hattiesburg and USA Yeast, entered into on or about December 15, 2011, to amend the term of the agreement to June 1, 2015; authorize Mayor to execute same in triplicate.

There being no discussion, the Motion received the affirmative vote of the Council as follows:

Yeas: 5 - Bradley, Delgado, Carroll, Ware and Naylor

Nays: 0

Yea:	5	President Bradley Council Member Delgado Council Member Carroll Vice President Ware Council Member Naylor
TEL-No Vote:	0	

Text of Legislative File 2012-1318

Title

Approve Amendment No. 1 to the Memorandum of Agreement (MOA) between the City of Hattiesburg and USA Yeast, entered into on or about December 15, 2011, to amend the term of the agreement to June 1, 2015; authorize Mayor to execute same in triplicate.

Summary

Approve Amendment No. 1 to the Memorandum of Agreement (MOA) between the City of Hattiesburg and USA Yeast, entered into on or about December 15, 2011, to amend the term of the agreement to June 1, 2015; authorize Mayor to execute same in triplicate.

Budget Information

Expenditure Type

Purchasing Item

Publication Information

AMENDMENT NO. 1

MEMORANDUM OF AGREEMENT

A Memorandum of Agreement ("MOA") was entered into on or about December 15, 2011 by the City of Hattiesburg, Mississippi (the "City") and USA Yeast Company, LLC ("USA Yeast") in connection with a certain Agreement (which is Exhibit 1 to the MOA) that was also entered into by the Parties on that same date, and also in connection with Katrina Supplemental CDBG Economic Development Grant Project Number R-103-205-03-KED.

1. The Agreement that is Exhibit 1 to the MOA is amended, as follows:

    A. Paragraph 4.4(a) of the Agreement is amended by deleting the date "July 1, 2013," and substituting in its place the date "June 1, 2015."

    B. Paragraph 4.4(b) of the Agreement is amended by deleting the date "July 1, 2013," and substituting in its place the date "June 1, 2015."

    C. Paragraph 4.8(a) of the Agreement is amended by deleting the date "July 1, 2013," and substituting in its place the date "June 1, 2015."

    D. Paragraph 4.8(b) of the Agreement is amended by deleting the date "July 1, 2013," and substituting in its place the date "June 1, 2015."

2. The MOA is amended by amending all references to the word "Agreement" (that is Exhibit 1 to the MOA) to the phrase "Agreement, as amended."

3. Except as expressly amended herein, all other terms and provisions of the Agreement that is Exhibit 1 to the MOA and all other terms and provisions of the MOA remain in full force and effect.

This Amendment No. 1 is approved on this the _____ day of _____, 2012.

_____	_____
Michael H. Lavallee, Manager USA Yeast Company, LLC	Johnny L. DuPree, Ph. D., Mayor City of Hattiesburg
Attest:	Attest:
_____	_____

AMENDMENT NO. 1

MEMORANDUM OF AGREEMENT

A Memorandum of Agreement ("MOA") was entered into on or about December 15, 2011 by the City of Hattiesburg, Mississippi (the "City") and USA Yeast Company, LLC ("USA Yeast") in connection with a certain Agreement (which is Exhibit 1 to the MOA) that was also entered into by the Parties on that same date, and also in connection with Katrina Supplemental CDBG Economic Development Grant Project Number R-103-205-03-KED.

1. The Agreement that is Exhibit 1 to the MOA is amended, as follows:

   A. Paragraph 4.4(a) of the Agreement is amended by deleting the date "July 1, 2013," and substituting in its place the date "June 1, 2015."

   B. Paragraph 4.4(b) of the Agreement is amended by deleting the date "July 1, 2013," and substituting in its place the date "June 1, 2015."

   C. Paragraph 4.8(a) of the Agreement is amended by deleting the date "July 1, 2013," and substituting in its place the date "June 1, 2015."

   D. Paragraph 4.8(b) of the Agreement is amended by deleting the date "July 1, 2013," and substituting in its place the date "June 1, 2015."

2. The MOA is amended by amending all references to the word "Agreement" (that is Exhibit 1 to the MOA) to the phrase "Agreement, as amended."

3. Except as expressly amended herein, all other terms and provisions of the Agreement that is Exhibit 1 to the MOA and all other terms and provisions of the MOA remain in full force and effect.

This Amendment No. 1 is approved on this the 6th day of November, 2012.

Michael H. Lavallee, Manager
USA Yeast Company, LLC

Johnny L. DuPree, Ph. D., Mayor
City of Hattiesburg

Attest:

Attest:

MISSISSIPPI DEVELOPMENT AUTHORITY
MODIFICATION SIGNATURE SHEET

DISASTER RECOVERY DIVISION
POST OFFICE BOX 849
JACKSON, MISSISSIPPI 39205-0849

1. Recipient's Name, Address, and Telephone No. City of Hattiesburg Post Office Drawer 1898 Hattiesburg, MS 39403-1898 601-545-4501	2. Effective Date: February 17, 2012
	3. Contract Number: R-103-205-03-KED / Grant Number: R-103-205-03-KED
	4. Modification Number: 1
	5. Grant Identifier: (Funding Source & Year) CFDA Number : 14.219 & 14.228
	6. Beginning and Ending Date February 17, 2012 – June 30, 2015
	7. Page 1 of 6

8. As a result of this modification, funds obligated are changed as follows:

CDBG	OTHER FEDERAL	OTHER (LOCAL-PRIVATE)
FROM: No change	**FROM: N/A**	**FROM: $851,000.00**
TO:	**TO:**	**TO: $2,488,400.00**
INCREASE:	**INCREASE:**	**INCREASE: $1,637,400.00**
DECREASE:	**DECREASE:**	**DECREASE:**

9. The above recipient is hereby modified as follows: The purpose of this modification is to amend the above referenced grant agreement to incorporate into it: (1) the amendments to the MOA and to the Agreement that is Exhibit 1 to the MOA that are set forth in "Amendment No. 1 to the Memorandum of Agreement that is attached hereto (2) the "Time Line for Project Implementation" that is attached hereto (3) to extend the subgrant ending date to June 30, 2015 and (4) to increase the company match by $1,637,400.00

10. Except as hereby modified, all terms and conditions of the subcontract remain unchanged.

12. Approved for Agency: Signature Date Name: Steven Hardin Title: Director, Community Services Division	13. Approved for Recipient: Signature Date 11-6-12 Name: Johnny L. DuPree, Ph. D. Title: Mayor

Katrina Supplemental CDBG Program
Budget Summary

Applicant: City of Hattiesburg

Funding Year: _____ **Grant Year:** ____ **Contract:** #R-103-205-03-KED

Description	MDA	IDIS		Other Funding Sources			
Administration			Katrina CDBG				Total
General Administration			$90,000.00				$90,000.00
Application Prep.			$10,000.00				$10,000.00
Audit							$ 0.00
Subtotal (A)			$100,000.00	$0.00	$0.00	$0.00	$100,000.00

Description	MDA	IDIS		Other Funding Sources			
Public Facilities			Katrina CDBG	USA Yeast			Total
Acquisition							$ 0.00
Architectural/Engineering			$351,000.00				$351,000.00
Bridges							$ 0.00
Construction of Public Building							$ 0.00
Contingency							$ 0.00
Demolition							$ 0.00
Drainage & Flood Protection							$ 0.00
Fire protection							$ 0.00
Legal							$ 0.00
Public Service							$ 0.00
Rail							$ 0.00
Renovation of Public Building							$ 0.00
Sewage Pumping Station							$ 0.00
Sewage Treatment							$ 0.00
Sewer Line(s)							$ 0.00
Street & Road Improvements							$ 0.00
Water Booster Station							$ 0.00
Water Line(s)							$ 0.00
Water Tank							$ 0.00
Water Treatment							$ 0.00
Water Well							$ 0.00
Other							$ 0.00
Evaporator Module Equipment			$4,549,000.00	$2,488,400.00			$7,037,400.00
							$ 0.00
Subtotal (B)			$4,900,000.00	$2,488,400.00	$0.00	$0.00	$7,388,400.00
Grand Total (A + B)			$5,000,000.00	$2,488,400.00	$0.00	$0.00	$7,488,400.00

MDA DRD

BUDGET MODIFICATION WORKSHEET
CDBG FUNDS

Recipient: City of Hattiesburg **Contract Number:** R-103-205-03-KED

Activity	Current Budget	Proposed Budget	Change (+ -)
N/A	N/A	N/A	N/A
	TOTAL	TOTAL	TOTAL

Comments: The purpose of this modification is to amend the above referenced grant agreement to incorporate into it: (1) the amendments to the MOA and to the Agreement that is Exhibit 1 to the MOA that are set forth in "Amendment No. 1 to the Memorandum of Agreement that is attached hereto (2) the "Time Line for Project Implementation" that is attached hereto and (3) to extend the subgrant ending date to June 30, 2015. No changes were made to the CDBG line item budget.

City of Hattiesburg, MS

200 Forrest St.
P.O. Box 1898
Hattiesburg, MS 39401

Master

File Number: 2012-1319

File ID:	2012-1319	**Type:**	Regular Agenda Item	**Status:**	Agenda Ready
Version:	1	**Reference:**		**In Control:**	City Council
				File Created:	10/30/2012
Brief Title:	Authorize Mayor to execute Modification No. 1 to the MDA Agreement No. R-103-205-03-KED.			**Final Action:**	11/06/2012
				Minute Book Number:	MB2012-1/383

Title:

Authorize Mayor to execute quadruple originals of Modification No. 1 to MDA Agreement number R-103-205-03-KED to extend the term of the agreement to June 30, 2015, incorporate Amendment No. 1 to the MOA with USA Yeast, and increase local match amount to $1,637,400.00.

Notes:

Sponsors:		**Enactment Date:**	
Attachments:	Amendment No 1 to MDA Grant Agreement, executed Amendment No 1 to MDA Grant Agreement (4)	**Enactment Number:**	
Contact:		**Meeting Date:**	11/06/2012
Drafter:	Sharon Waits	**Effective Date:**	

History of Legislative File

Version:	Acting Body:	Date:	Action:	Sent To:	Due Date:	Return Date:	Result:
1	City Council	11/06/2012	Authorize				Pass

Action Text: A MOTION was made by Council Member Naylor and seconded by Council Vice President Ware to Authorize Mayor to execute quadruple originals of Modification No. 1 to MDA Agreement number R-103-205-03-KED to extend the term of the agreement to June 30, 2015, incorporate Amendment No. 1 to the MOA with USA Yeast, and increase local match amount to $1,637,400.00.

There being no discussion, the Motion received the affirmative vote of the Council as follows:

Yeas: 5 - Bradley, Delgado, Carroll, Ware and Naylor

Nays: 0

Yea: 5 President Bradley
Council Member Delgado
Council Member Carroll
Vice President Ware
Council Member Naylor

ΓEL-No Vote: 0

Text of Legislative File 2012-1319

Title

Authorize Mayor to execute quadruple originals of Modification No. 1 to MDA Agreement number R-103-205-03-KED to extend the term of the agreement to June 30, 2015, incorporate Amendment No. 1 to the MOA with USA Yeast, and increase local match amount to $1,637,400.00.

Summary

Authorize Mayor to execute Modification No. 1 to MDA Agreement number R-103-205-03-KED to extend the term of the agreement to June 30, 2015, incorporate Amendment No. 1 to the MOA with USA Yeast, and increase local match amount to $1,637,400.00.

Budget Information

Expenditure Type

Purchasing Item

Publication Information

MISSISSIPPI DEVELOPMENT AUTHORITY
MODIFICATION SIGNATURE SHEET

DISASTER RECOVERY DIVISION
POST OFFICE BOX 849
JACKSON, MISSISSIPPI 39205-0849

1. Recipient's Name, Address, and Telephone No. City of Hattiesburg Post Office Drawer 1898 Hattiesburg, MS 39403-1898 601-545-4501	2. Effective Date: February 17, 2012
	3. Contract Number: R-103-205-03-KED Grant Number: R-103-205-03-KED
	4. Modification Number: 1
	5. Grant Identifier: (Funding Source & Year) CFDA Number : 14.219 & 14.228
	6. Beginning and Ending Date February 17, 2012 – June 30, 2015
	7. Page 1 of 6

8. As a result of this modification, funds obligated are changed as follows:

CDBG	OTHER FEDERAL	OTHER (LOCAL-PRIVATE)
FROM: No change	**FROM: N/A**	**FROM: $851,000.00**
TO:	**TO:**	**TO: $2,488,400.00**
INCREASE:	**INCREASE:**	**INCREASE: $1,637,400.00**
DECREASE:	**DECREASE:**	**DECREASE:**

9. The above recipient is hereby modified as follows: The purpose of this modification is to amend the above referenced grant agreement to incorporate into it: (1) the amendments to the MOA and to the Agreement that is Exhibit 1 to the MOA that are set forth in "Amendment No. 1 to the Memorandum of Agreement that is attached hereto (2) the "Time Line for Project Implementation" that is attached hereto (3) to extend the subgrant ending date to June 30, 2015 and (4) to increase the company match by $1,637,400.00

10. Except as hereby modified, all terms and conditions of the subcontract remain unchanged.

12. Approved for Agency: Signature Date Name: Steven Hardin Title: Director, Community Services Division	13. Approved for Recipient: Signature Date Name: Johnny L. DuPree, Ph. D. Title: Mayor

Katrina Supplemental CDBG Program
Budget Summary

Applicant: City of Hattiesburg

Funding Year: _____ **Grant Year:** ____ **Contract:** #R-103-205-03-KED

Description	MDA	IDIS		Other Funding Sources			
Administration			Katrina CDBG				Total
General Administration			$90,000.00				$90,000.00
Application Prep.			$10,000.00				$10,000.00
Audit							$ 0.00
Subtotal (A)			$100,000.00	$0.00	$0.00	$0.00	$100,000.00
Description	MDA	IDIS		Other Funding Sources			
Public Facilities			Katrina CDBG	USA Yeast			Total
Acquisition							$ 0.00
Architectural/Engineering			$351,000.00				$351,000.00
Bridges							$ 0.00
Construction of Public Building							$ 0.00
Contingency							$ 0.00
Demolition							$ 0.00
Drainage & Flood Protection							$ 0.00
Fire protection							$ 0.00
Legal							$ 0.00
Public Service							$ 0.00
Rail							$ 0.00
Renovation of Public Building							$ 0.00
Sewage Pumping Station							$ 0.00
Sewage Treatment							$ 0.00
Sewer Line(s)							**$ 0.00**
Street & Road Improvements							$ 0.00
Water Booster Station							$ 0.00
Water Line(s)							$ 0.00
Water Tank							$ 0.00
Water Treatment							$ 0.00
Water Well							$ 0.00
Other							$ 0.00
Evaporator Module Equipment			$4,549,000.00	$2,488,400.00			$7,037,400.00
							$ 0.00
Subtotal (B)			$4,900,000.00	$2,488,400.00	$0.00	$0.00	$7,388,400.00
Grand Total (A + B)			$5,000,000.00	$2,488,400.00	$0.00	$0.00	$7,488,400.00

MDA DRD

BUDGET MODIFICATION WORKSHEET
CDBG FUNDS

Recipient: City of Hattiesburg **Contract Number:** R-103-205-03-KED

Activity	Current Budget	Proposed Budget	Change (+ -)
N/A	N/A	N/A	N/A
	TOTAL	TOTAL	TOTAL

Comments: The purpose of this modification is to amend the above referenced grant agreement to incorporate into it: (1) the amendments to the MOA and to the Agreement that is Exhibit 1 to the MOA that are set forth in "Amendment No. 1 to the Memorandum of Agreement that is attached hereto (2) the "Time Line for Project Implementation" that is attached hereto and (3) to extend the subgrant ending date to June 30, 2015. No changes were made to the CDBG line item budget.

AMENDMENT NO. 1

MEMORANDUM OF AGREEMENT

A Memorandum of Agreement ("MOA") was entered into on or about December 15, 2011 by the City of Hattiesburg, Mississippi (the "City") and USA Yeast Company, LLC ("USA Yeast") in connection with a certain Agreement (which is Exhibit 1 to the MOA) that was also entered into by the Parties on that same date, and also in connection with Katrina Supplemental CDBG Economic Development Grant Project Number R-103-205-03-KED.

1. The Agreement that is Exhibit 1 to the MOA is amended, as follows:

   A. Paragraph 4.4(a) of the Agreement is amended by deleting the date "July 1, 2013," and substituting in its place the date "June 1, 2015."

   B. Paragraph 4.4(b) of the Agreement is amended by deleting the date "July 1, 2013," and substituting in its place the date "June 1, 2015."

   C. Paragraph 4.8(a) of the Agreement is amended by deleting the date "July 1, 2013," and substituting in its place the date "June 1, 2015."

   D. Paragraph 4.8(b) of the Agreement is amended by deleting the date "July 1, 2013," and substituting in its place the date "June 1, 2015."

2. The MOA is amended by amending all references to the word "Agreement" (that is Exhibit 1 to the MOA) to the phrase "Agreement, as amended."

3. Except as expressly amended herein, all other terms and provisions of the Agreement that is Exhibit 1 to the MOA and all other terms and provisions of the MOA remain in full force and effect.

This Amendment No. 1 is approved on this the _____ day of _____, 2012.

_____	_____
Michael H. Lavallee, Manager USA Yeast Company, LLC	Johnny L. DuPree, Ph. D., Mayor City of Hattiesburg
Attest:	Attest:
_____	_____

CITY OF HATTIESBURG, MISSISSIPPI
KATRINA SUPPLEMENTAL CDBG ECONOMIC DEVELOPMENT PROGRAM
TIME LINE FOR PROJECT IMPLEMENTATION
USA YEAST COMPANY (Page 1)

MONTH	Nov 12	Dec 12	Jan 13	Feb 13	Mar 13	Apr 13	May 13	June 13	July 13	Aug 13	Sep 13	Oct 13	Nov 13	Dec 13	Jan 14	Feb 14	Mar 14	Apr 14	May 14	June 14	July 14	Aug 14	Sept 14	Oct 14	Nov 14	Dec 14	Jan 15	Feb 15	Mar 15
TASK DESCRIPTION																													
PROJECT DESIGN (Complete)																													
BIDDING & AWARD (Complete as of 11/8/12)																													
EVAPORATOR MANUFACTURE & DELIVERY																													
INSTALLATION																													
STARTUP																													
TESTING																													
ACCEPTANCE & PROJECT CLOSE OUT																													

CITY OF HATTIESBURG, MISSISSIPPI
KATRINA SUPPLEMENTAL CDBG ECONOMIC DEVELOPMENT PROGRAM
TIME LINE FOR PROJECT IMPLEMENTATION
USA YEAST COMPANY (Page 2)

MONTH	Apr 15	May 15	June 15	July 15	Aug 15	Sept 15	Oct 15	Nov 15	Dec 15	Jan 16	Feb 16	Mar 16	Apr 16	May 16
TASK DESCRIPTION														
PROJECT DESIGN (Complete)														
BIDDING & AWARD (Complete as of 11/8/12)														
EVAPORATOR MANUFACTURE & DELIVERY														
INSTALLATION														
STARTUP														
TESTING														
ACCEPTANCE & PROJECT CLOSE OUT														

MISSISSIPPI DEVELOPMENT AUTHORITY
MODIFICATION SIGNATURE SHEET

DISASTER RECOVERY DIVISION
POST OFFICE BOX 849
JACKSON, MISSISSIPPI 39205-0849

1. Recipient's Name, Address, and Telephone No. City of Hattiesburg Post Office Drawer 1898 Hattiesburg, MS 39403-1898 601-545-4501	2. Effective Date: February 17, 2012
	3. Contract Number: R-103-205-03-KED / Grant Number: R-103-205-03-KED
	4. Modification Number: 1
	5. Grant Identifier: (Funding Source & Year) CFDA Number : 14.219 & 14.228
	6. Beginning and Ending Date February 17, 2012 – June 30, 2015
	7. Page 1 of 6

8. As a result of this modification, funds obligated are changed as follows:

CDBG	OTHER FEDERAL	OTHER (LOCAL-PRIVATE)
FROM: No change	**FROM: N/A**	**FROM: $851,000.00**
TO:	**TO:**	**TO: $2,488,400.00**
INCREASE:	**INCREASE:**	**INCREASE: $1,637,400.00**
DECREASE:	**DECREASE:**	**DECREASE:**

9. The above recipient is hereby modified as follows: The purpose of this modification is to amend the above referenced grant agreement to incorporate into it: (1) the amendments to the MOA and to the Agreement that is Exhibit 1 to the MOA that are set forth in "Amendment No. 1 to the Memorandum of Agreement that is attached hereto (2) the "Time Line for Project Implementation" that is attached hereto (3) to extend the subgrant ending date to June 30, 2015 and (4) to increase the company match by $1,637,400.00

10. Except as hereby modified, all terms and conditions of the subcontract remain unchanged.

12. Approved for Agency: Signature Date Name: Steven Hardin Title: Director, Community Services Division	13. Approved for Recipient: 11-6-12 Signature Date Name: Johnny L. DuPree, Ph. D. Title: Mayor

Katrina Supplemental CDBG Program
Budget Summary

Applicant: City of Hattiesburg

Funding Year: _____ **Grant Year:** _____ **Contract:** #R-103-205-03-KED

Description	MDA	IDIS		Other Funding Sources			
Administration			Katrina CDBG				Total
General Administration			$90,000.00				$90,000.00
Application Prep.			$10,000.00				$10,000.00
Audit							$ 0.00
Subtotal (A)			$100,000.00	$0.00	$0.00	$0.00	$100,000.00

Description	MDA	IDIS		Other Funding Sources			
Public Facilities			Katrina CDBG	USA Yeast			Total
Acquisition							$ 0.00
Architectural/Engineering			$351,000.00				$351,000.00
Bridges							$ 0.00
Construction of Public Building							$ 0.00
Contingency							$ 0.00
Demolition							$ 0.00
Drainage & Flood Protection							$ 0.00
Fire protection							$ 0.00
Legal							$ 0.00
Public Service							$ 0.00
Rail							$ 0.00
Renovation of Public Building							$ 0.00
Sewage Pumping Station							$ 0.00
Sewage Treatment							$ 0.00
Sewer Line(s)							$ 0.00
Street & Road Improvements							$ 0.00
Water Booster Station							$ 0.00
Water Line(s)							$ 0.00
Water Tank							$ 0.00
Water Treatment							$ 0.00
Water Well							$ 0.00
Other							$ 0.00
Evaporator Module Equipment			$4,549,000.00	$2,488,400.00			$7,037,400.00
							$ 0.00
Subtotal (B)			$4,900,000.00	$2,488,400.00	$0.00	$0.00	$7,388,400.00
Grand Total (A + B)			$5,000,000.00	$2,488,400.00	$0.00	$0.00	$7,488,400.00

MDA DRD

BUDGET MODIFICATION WORKSHEET
CDBG FUNDS

Recipient: City of Hattiesburg **Contract Number:** R-103-205-03-KED

Activity	Current Budget	Proposed Budget	Change (+ -)
N/A	N/A	N/A	N/A
	TOTAL	TOTAL	TOTAL

Comments: The purpose of this modification is to amend the above referenced grant agreement to incorporate into it: (1) the amendments to the MOA and to the Agreement that is Exhibit 1 to the MOA that are set forth in "Amendment No. 1 to the Memorandum of Agreement that is attached hereto (2) the "Time Line for Project Implementation" that is attached hereto and (3) to extend the subgrant ending date to June 30, 2015. No changes were made to the CDBG line item budget.

CITY OF HATTIESBURG, MISSISSIPPI
KATRINA SUPPLEMENTAL CDBG ECONOMIC DEVELOPMENT PROGRAM
TIME LINE FOR PROJECT IMPLEMENTATION
USA YEAST COMPANY (Page 1)

MONTH	Nov 12	Dec 12	Jan 13	Feb 13	Mar 13	Apr 13	May 13	June 13	July 13	Aug 13	Sep 13	Oct 13	Nov 13	Dec 13	Jan 14	Feb 14	Mar 14	Apr 14	May 14	June 14	July 14	Aug 14	Sept 14	Oct 14	Nov 14	Dec 14	Jan 15	Feb 15	Mar 15
TASK DESCRIPTION																													
PROJECT DESIGN (Complete)																													
BIDDING & AWARD (Complete as of 11/8/12)																													
EVAPORATOR MANUFACTURE & DELIVERY																													
INSTALLATION																													
STARTUP																													
TESTING																													
ACCEPTANCE & PROJECT CLOSE OUT																													

CITY OF HATTIESBURG, MISSISSIPPI
KATRINA SUPPLEMENTAL CDBG ECONOMIC DEVELOPMENT PROGRAM
TIME LINE FOR PROJECT IMPLEMENTATION
USA YEAST COMPANY (Page 2)

MONTH	Apr 15	May 15	June 15	July 15	Aug 15	Sept 15	Oct 15	Nov 15	Dec 15	Jan 16	Feb 16	Mar 16	Apr 16	May 16
TASK DESCRIPTION														
PROJECT DESIGN (Complete)														
BIDDING & AWARD (Complete as of 11/8/12)														
EVAPORATOR MANUFACTURE & DELIVERY														
INSTALLATION														
STARTUP														
TESTING														
ACCEPTANCE & PROJECT CLOSE OUT														

City of Hattiesburg, MS

200 Forrest St.
P.O. Box 1898
Hattiesburg, MS 39401

Master

File Number: 2012-1307

File ID:	2012-1307	**Type:**	Regular Agenda Item	**Status:**	Passed
Version:	1	**Reference:**		**In Control:**	City Council
				File Created:	10/30/2012
Brief Title:	Approve Change Order No. 1 for the Airport Drainage and Safety Improvements project and authorize Mayor to execute.			**Final Action:**	11/06/2012
				Minute Book Number:	MB2012-1/383-384

Title:

Approve Change Order No. 1 for the Bobby L. Chain Airport Drainage and Safety Improvements project to adjust quantities to final, resulting in a contract reduction of $47,277.42; Authorize Mayor to execute same.

Notes:

Sponsors:		**Enactment Date:**	
Attachments:	As Built Change Order (3), Executed change order	**Enactment Number:**	
Contact:		**Meeting Date:**	11/06/2012
Drafter:	Sharon Waits	**Effective Date:**	

History of Legislative File

Version:	Acting Body:	Date:	Action:	Sent To:	Due Date:	Return Date:	Result:
1	City Council	11/06/2012	Approve				Pass

Action Text: A MOTION was made by Council Member Delgado and seconded by Council Member Naylor to Approve Change Order No. 1 for the Bobby L. Chain Airport Drainage and Safety Improvements project to adjust quantities to final, resulting in a contract reduction of $47,277.42; Authorize Mayor to execute same.

There being no discussion, the Motion received the affirmative vote of the Council as follows:

Yeas: 5 - Bradley, Delgado, Carroll, Ware and Naylor

Nays: 0

Yea: 5 President Bradley
Council Member Delgado
Council Member Carroll
Vice President Ware
Council Member Naylor

ΓEL-No Vote: 0

Text of Legislative File 2012-1307

Title

Approve Change Order No. 1 for the Bobby L. Chain Airport Drainage and Safety Improvements project to adjust quantities to final, resulting in a contract reduction of $47,277.42; Authorize Mayor to execute same.

Summary

Approve Change Order No. 1 for the Bobby L. Chain Airport Drainage and Safety Improvements project to adjust quantities to final, resulting in a contract reduction of $47,277.42; Authorize Mayor to execute same.

Budget Information

Expenditure Type

Purchasing Item

Publication Information

ARE CONSULTANTS, INC.

October 25, 2012

Mr. Bert Kuyrkendall, PE
Director of Engineering
City of Hattiesburg
212 W. Front Street
Hattiesburg, MS 39401

Subject: Bobby L. Chain (HGB) Airport
Runway 31 Drainage, Safety Improvements
Contract Change Order

Dear Mr. Kuyrkendall,

This is the As-Built Change Order which adjusts the quantities to final. It resulted in a net reduction of the contract amount by $47,277.42. Please present this to City Council to authorize execution by the owner.

Please contact us if you require additional information.

Sincerely,

ARE Consultants, Inc.

1216 S. Morrison, Suite 5 - Hammond, LA 70403
800 Spring Street, Suite 214 - Shreveport, LA 71101
Phone (318) 222-8252 - Fax (318) 222-8251

AIR REUNION CONSULTANTS

Contract Change Order

Date: August 18, 2012

Project No.: AIP No. 3-28-0031-0019-2012

Project: Hattiesburg-Bobby L. Chain Municipal Runway 31 Drainage Improvements & Safety Area Improvements

To Contractor: Fairley Construction Services, Inc.
828 Highway 11
Petal, MS 36465

Contract Date: June 29, 2012

Asbuilt Change Order Number: No. 1

You are hereby requested to comply with the following changes from the Contract Plans and Specifications.

Item No.	Description of Changes - quantities, units, unit prices, changes in completion schedule, etc.	Decrease in Contract Amount	Increase in Contract Amount
P-152.4.1	Unclassified Excavation 239 Cu. Yards @ $4.00 / Yard	$956.00	
P-152.4.2	Embankment in Place 75 Cu. Yards @ $14.25 / Yard	$1,068.75	
P-208	Aggregate Base Course 240 Cu. Yards @ $62.50 / Yard	$15,000.00	
P-209	Crushed Aggregrate Base Course 208 Cu. Yards @ $68.00 / Yard	$14,144.00	
P-401-8.1a	Bituminous Surface Coat 55.27 Ton @ $95.53 / Ton	$5,279.94	
P-602	Bituminous Prime Coat 40 Gal @ $4.38 / Gal	$175.20	
D-752	Shorten Box Culvert ext 20 ft; delete South wingwall (replace w/ block wing wall)	$0.00	
P-602-5.1(A)	Runway and Taxiway Painting 1,500 Sq. Feet @ $2.80 / Sq. Feet	$4,200.00	
P-621	Saw-Cut Grooves 133 Sq. Yards @ $3.41 / Sq. Yard	$453.53	
I-3.2	Additional Insurance Premium	$6,000.00	
	TOTALS	**$47,277.42**	

Total Decrease Due to this Change Order	$47,277.42
Total Increase Due to this Change Order	$0.00
Net ___ Increase _x_ Decrease Contract Amount Due This Change Order	$47,277.42
Original Contract Amount	$745,513.24
Net Change from Previous Change Orders	$0.00
Contract Amount Prior to this Change Order	$0.00
Net __ Increase _x_ Decrease This Change Order	$47,277.42
Contract Amount with all Approved Change Orders	$698,235.82

The time provided for completion in the Contract is _x_ Unchanged __Increased __Decreased by ____calendar days.

This document shall become an Amendment to the contract and Special Provisions.

Recommended by: Gordon Davis 8/18/12
Engineer ARE Consultants, Inc. Date

Accepted by: _____
Contractor Date

Accepted by: _____
Owner Date

CHANGE ORDER

Contract: MINERAL CREEK BANK STABILIZATION

Date of Issuance:_____ Effective Date:_____

This Change Order contains an itemized quotation for changes in the Contract Sum in response to proposed modifications to the Contract Documents.

Description of Proposed Change: Remove the need to mechanically stabilized the northern slope using a woven geotextile fabric. Instead of mechanically stabilizing the slope with geotextile reinforcement, the existing slope will be graded to the proposed 2:1 slope.

Reason for Change: After the northern slope was cleared of trees and debris, it was discovered to have adequate strength in its existing condition and therefore the mechanical stabilization was not needed to adequately stabilize the slope.

Does this Change Order involve a change in the Contract Sum or Contract Time? Yes

Proposed Change in Contract Sum:

Original	Item #5	Unit Rate = $16.66	Total = $9996.00	Contract Sum = $68,763.50
Proposed	Item #5	Unit Rate = $6.00	Total = $3600.00	Contract Sum = $62,367.50

Proposed Change in Contract Time: No change to contract time

Attached Pages: Revised Drawing #5 – Bank Stabilization Details

OWNER: City of Hattiesburg, Mississippi

Print Name: Johnny L. DuPree

Title: Mayor

Date: 10-16-12

CONTRACTOR: D&M Clark Construction, LLC

Print Name: Douglas W. Clark

Title: V. President

Date:_____

City of Hattiesburg, MS

200 Forrest St.
P.O. Box 1898
Hattiesburg, MS 39401

Master

File Number: 2012-1299

File ID:	2012-1299	**Type:**	Regular Agenda Item	**Status:**	Agenda Ready
Version:	1	**Reference:**		**In Control:**	City Council
				File Created:	10/30/2012
Brief Title:	DPA Subordination Agreement - Rogers			**Final Action:**	11/06/2012
				Minute Book Number:	MB2012-1/384

Title:

Authorize the Mayor to sign a Subordination Agreement on property owned by Renea Rogers and located at 131 East 5th St., allowing for the refinance of a mortgage on a property that is within the affordability period associated with a Down Payment Assistance award

Notes:

Sponsors:		**Enactment Date:**	
Attachments:	Subordination Agreement - Rogers, executed Subordination Agreement - Rogers	**Enactment Number:**	
Contact:		**Meeting Date:**	11/06/2012
Drafter:		**Effective Date:**	

History of Legislative File

Version:	Acting Body:	Date:	Action:	Sent To:	Due Date:	Return Date:	Result:
1	City Council	11/06/2012	Authorize				Pass

Action Text: A MOTION was made by Council Member Delgado and seconded by Council Member Naylor to Authorize the Mayor to sign a Subordination Agreement allowing for the refinance of a mortgage on a property that is within the affordability period associated with a Down Payment Assistance award.

There being no discussion, the Motion received the affirmative vote of the Council as follows:

Yeas: 5 - Bradley, Delgado, Carroll, Ware and Naylor

Nays: 0

Yea: 5 President Bradley
Council Member Delgado
Council Member Carroll
Vice President Ware
Council Member Naylor

TEL-No Vote: 0

Text of Legislative File 2012-1299

Title

Authorize the Mayor to sign a Subordination Agreement on property owned by Renea Rogers and located at 131 East 5th St., allowing for the refinance of a mortgage on a property that is within the affordability period associated with a Down Payment Assistance award

Summary

DPA Subordination Agreement - Rogers

Budget Information

Expenditure Type

Purchasing Item

Publication Information

AFTER RECORDING MAIL TO:
RELS SETTLEMENT SERVICES
1 CORELOGIC DRIVE, 6-4
WESTLAKE, TX 76262

DOCUMENT PREPARED BY:
CHANGE OF TITLE, INC.
160 S. OLD SPRINGS ROAD, SUITE 260
ANAHEIM HILLS, CA 92808

Assessor's Parcel Number: 2-029G-03-533.00

SUBORDINATION AGREEMENT

NOTICE: THIS SUBORDINATION AGREEMENT RESULTS IN YOUR SECURITY INTEREST IN THE PROPERTY BECOMING SUBJECT TO AND OF LOWER PRIORITY THAN THE LIEN OF SOME OTHER OR LATER SECURITY INSTRUMENT.

This Subordination Agreement, made this _____day of _____ 20__ by **CITY OF HATTIESBURG, MISSISSIPPI** (hereinafter referred to as Beneficiary), present owner and holder of the Mortgage and note first hereafter described, and **WELLS FARGO BANK, N.A.** (hereinafter referred to as "Lender");

WITNESSETH

THAT WHEREAS, **MISS. RENEA ROGERS** (hereinafter referred to as "Owner") did execute a Mortgage, to **CITY OF HATTIESBURG, MISSISSIPPI** covering that certain real property described as follows:

LOT 6 AND ALL THAT PART OF LOT 5 LYING AND BEING NORTH OF THE R.O.W. OF THE MISSISSIPPI CENTRAL RAILROAD COMPANY IN BLOCK 100 OF AND ACCORDING TO THE KAMPER & WHINNERY SURVEY NO. 2 OF THE CITY OF HATTIESBURG, AS PER OFFICIAL MAP OR PLAT THEREOF ON FILE IN THE OFFICE OF THE CHANCERY CLERK OF FORREST COUNTY, MISSISSIPPI

AND more commonly known as: 131 E 5TH ST, HATTIESBURG, MS 39401

to secure a note in the sum of **$10,000.00** in favor of **CITY OF HATTIESBURG, MISSISSIPPI** which Mortgage was dated 4/30/2008, recorded 5/2/2008, as Book 1637, Page 257, in Official Records of said county, and re-recorded 9/22/2008 in Book 1661, Page 349, and

WHEREAS, Owner has executed, or is about to execute, a Mortgage and note not to exceed the sum of **$88,854.00** dated _____, in favor of Lender, payable with interest and upon the terms and conditions described therein, which Mortgage is to be recorded concurrently herewith; and

WHEREAS, It is a condition precedent to obtaining said loan that said Mortgage last above mentioned shall unconditionally be and remain at all times a lien or charge upon the land hereinbefore described, prior and superior to the lien or charge of the Mortgage first mentioned, Owner has requested Beneficiary to subordinate Beneficiary's lien to the lien about to be taken by the Lender; and

WHEREAS, Lender is willing to make said loan provided the Mortgage securing the same is a lien or charge upon the above described property prior and superior to the lien or charge of the Mortgage first above mentioned and provided that Beneficiary will specifically and unconditionally subordinate the lien or charge of the Mortgage first above mentioned to the lien or charge of the Mortgage in favor of the Lender; and

WHEREAS, It is to the mutual benefit of the parties hereto that Lender make such loan to Owner; and Beneficiary is willing that the Mortgage securing the same shall, when recorded, constitute a lien or charge upon said land which is unconditionally prior and superior to the lien or charge of the Mortgage first above mentioned.

NOW, THEREFORE, in consideration of the mutual benefits accruing to the parties hereto and other valuable consideration, the receipt and sufficiency of which consideration is hereby acknowledged, and in order to induce Lender to make the loan above referred to, it is hereby declared, understood and agreed to as follows:

(1) That said Mortgage securing said note in favor of Lender, and any renewals or extensions thereof, shall unconditionally be and remain at all times a lien or charge on the property therein described, prior and superior to the lien or charge of the Mortgage first above mentioned.

(2) That Lender would not make its loan above described without this subordination agreement.

(3) That this agreement shall be the whole and only agreement with regard to the subordination of the lien or charge of the Mortgage first above mentioned to the lien or charge of the Mortgage in favor of Lender above referred to and shall supersede and cancel, but only insofar as would affect the priority between the mortgages hereinbefore specifically described, any prior agreements as to such subordination including, but not limited to, those provisions, if any contained in the Mortgage first above mentioned, which provide for the subordination of the lien or charge thereof to another mortgage or mortgages.

Beneficiary declares, agrees and acknowledges that:

(a) It consents to and approves (i) all provisions of the note and Mortgage in favor of Lender above referred to, and (ii) all agreements, including but not limited to any loan or escrow agreements, between Owner and Lender for the disbursement of the proceeds of Lender's loan.

(b) Lender in making disbursements pursuant to any such agreement is under no obligation or duty to, nor has Lender represented that it will, see to the application of such proceeds by the person or persons to whom Lender disburses such proceeds and any application or use of such proceeds for purposes other than those provided for in such agreement or agreements shall not defeat the subordination herein made in whole or in part.

(c) It intentionally waives, relinquishes and subordinates the lien or charge of the Mortgage first above mentioned in favor of the lien or charge upon said land of the Mortgage in favor of Lender above referred to and understands that in reliance upon, and in consideration of, this waiver, relinquishment and subordination specific loans and advances are being and will be made and, as part and parcel thereof, specific monetary and other obligations are being and will be entered into which would not be made or entered unto but for said reliance upon this waiver, relinquishment and subordination; and

(d) An endorsement has been placed upon the note secured by the Mortgage first above-mentioned that said Mortgage has by this instrument been subordinated to the lien or charge of the Mortgage in favor of Lender above referred to.

NOTICE: THIS SUBORDINATION AGREEMENT CONTAINS A PROVISION WHICH ALLOWS THE PERSON OBLIGATED ON YOUR REAL PROPERTY SECURITY TO OBTAIN A LOAN A PORTION OF WHICH MAY BE EXPENDED FOR OTHER PURPOSES THAN IMPROVEMENT OF LAND.

IN WITNESS whereof, THE PARTY (IES) hereunto sets his hand this _____day of_____20__.

CITY OF HATTIESBURG, MISSISSIPPI

BY:_____

Printed Name & Title:_____

Witness Signature:_____

Witness Name (Print):_____

Witness Signature:_____

Witness Name (Print):_____

STATE OF _____

SS.

COUNTY OF _____

The foregoing instrument was acknowledged before me this _____ day of_____, 20_____, by _____(name of officer or agent) as_____, (title of officer or agent) of **CITY OF HATTIESBURG, MISSISSIPPI**, a_____ (state or place of incorporation) corporation, on behalf of the corporation.

NOTARYSTAMP/SEAL

_____

Notary public

My Commission Expires: _____

IT IS RECOMMENDED THAT, PRIOR TO THE EXECUTION OF THIS SUBORDINATION AGREEMENT, THE PARTIES CONSULT WITH THEIR ATTORNEYS WITH RESPECT THERETO.

From: (866) 826-9210 Origin ID: GPZA
Daniel Stonelake
RELS SETTLEMENT SERVICES
5700 Smetana Drive, Suite 400

Minnetonika, MN 55343

J122012071803 25

Ship Date: 17OCT12
Act/Wgt: 1.0 LB
CAD: 3425524/INET3300

Delivery Address Bar Code

SHIP TO: (800) 501-2766 BILL SENDER

Postclosing
Rels Settlement Services
1 Corelogice Drive
BLD 6 FLR 4 STE 300
WESTLAKE, TX 76262

Ref # 0344809124
Invoice #
PO #
Dept # 4003/0344809124/RCP

THU - 18 OCT A2
STANDARD OVERNIGHT

TRK# 7992 1962 0393
0201

XH MWLA

76262
TX-US
DFW

515G1/9CCB/AA44

After printing this label:
1. Use the 'Print' button on this page to print your label to your laser or inkjet printer.
2. Fold the printed page along the horizontal line.
3. Place label in shipping pouch and affix it to your shipment so that the barcode portion of the label can be read and scanned.

Warning: Use only the printed original label for shipping. Using a photocopy of this label for shipping purposes is fraudulent and could result in additional billing charges, along with the cancellation of your FedEx account number.
Use of this system constitutes your agreement to the service conditions in the current FedEx Service Guide, available on fedex.com.FedEx will not be responsible for any claim in excess of $100 per package, whether the result of loss, damage, delay, non-delivery,misdelivery,or misinformation, unless you declare a higher value, pay an additional charge, document your actual loss and file a timely claim.Limitations found in the current FedEx Service Guide apply. Your right to recover from FedEx for any loss, including intrinsic value of the package, loss of sales, income interest, profit, attorney's fees, costs, and other forms of damage whether direct, incidental,consequential, or special is limited to the greater of $100 or the authorized declared value. Recovery cannot exceed actual documented loss.Maximum for items of extraordinary value is $500, e.g. jewelry, precious metals, negotiable instruments and other items listed in our ServiceGuide. Written claims must be filed within strict time limits, see current FedEx Service Guide.

AFTER RECORDING MAIL TO:
RELS SETTLEMENT SERVICES
1 CORELOGIC DRIVE, 6-4
WESTLAKE, TX 76262

DOCUMENT PREPARED BY:
CHANGE OF TITLE, INC.
160 S. OLD SPRINGS ROAD, SUITE 260
ANAHEIM HILLS, CA 92808

Assessor's Parcel Number: 2-029G-03-533.00

SUBORDINATION AGREEMENT

NOTICE: THIS SUBORDINATION AGREEMENT RESULTS IN YOUR SECURITY INTEREST IN THE PROPERTY BECOMING SUBJECT TO AND OF LOWER PRIORITY THAN THE LIEN OF SOME OTHER OR LATER SECURITY INSTRUMENT.

This Subordination Agreement, made this 6th day of November 2012 by **CITY OF HATTIESBURG, MISSISSIPPI** (hereinafter referred to as Beneficiary), present owner and holder of the Mortgage and note first hereafter described, and **WELLS FARGO BANK, N.A.** (hereinafter referred to as "Lender");

WITNESSETH

THAT WHEREAS, **MISS. RENEA ROGERS** (hereinafter referred to as "Owner") did execute a Mortgage, to **CITY OF HATTIESBURG, MISSISSIPPI** covering that certain real property described as follows:

LOT 6 AND ALL THAT PART OF LOT 5 LYING AND BEING NORTH OF THE R.O.W. OF THE MISSISSIPPI CENTRAL RAILROAD COMPANY IN BLOCK 100 OF AND ACCORDING TO THE KAMPER & WHINNERY SURVEY NO. 2 OF THE CITY OF HATTIESBURG, AS PER OFFICIAL MAP OR PLAT THEREOF ON FILE IN THE OFFICE OF THE CHANCERY CLERK OF FORREST COUNTY, MISSISSIPPI

AND more commonly known as: 131 E 5TH ST, HATTIESBURG, MS 39401

to secure a note in the sum of **$10,000.00** in favor of **CITY OF HATTIESBURG, MISSISSIPPI** which Mortgage was dated 4/30/2008, recorded 5/2/2008, as Book 1637, Page 257, in Official Records of said county, and re-recorded 9/22/2008 in Book 1661, Page 349, and

WHEREAS, Owner has executed, or is about to execute, a Mortgage and note not to exceed the sum of **$88,854.00** dated _____, in favor of Lender, payable with interest and upon the terms and conditions described therein, which Mortgage is to be recorded concurrently herewith; and

WHEREAS, It is a condition precedent to obtaining said loan that said Mortgage last above mentioned shall unconditionally be and remain at all times a lien or charge upon the land hereinbefore described, prior and superior to the lien or charge of the Mortgage first mentioned, Owner has requested Beneficiary to subordinate Beneficiary's lien to the lien about to be taken by the Lender; and

WHEREAS, Lender is willing to make said loan provided the Mortgage securing the same is a lien or charge upon the above described property prior and superior to the lien or charge of the Mortgage first above mentioned and provided that Beneficiary will specifically and unconditionally subordinate the lien or charge of the Mortgage first above mentioned to the lien or charge of the Mortgage in favor of the Lender; and

WHEREAS, It is to the mutual benefit of the parties hereto that Lender make such loan to Owner; and Beneficiary is willing that the Mortgage securing the same shall, when recorded, constitute a lien or charge upon said land which is unconditionally prior and superior to the lien or charge of the Mortgage first above mentioned.

NOW, THEREFORE, in consideration of the mutual benefits accruing to the parties hereto and other valuable consideration, the receipt and sufficiency of which consideration is hereby acknowledged, and in order to induce Lender to make the loan above referred to, it is hereby declared, understood and agreed to as follows:

(1) That said Mortgage securing said note in favor of Lender, and any renewals or extensions thereof, shall unconditionally be and remain at all times a lien or charge on the property therein described, prior and superior to the lien or charge of the Mortgage first above mentioned.

(2) That Lender would not make its loan above described without this subordination agreement.

(3) That this agreement shall be the whole and only agreement with regard to the subordination of the lien or charge of the Mortgage first above mentioned to the lien or charge of the Mortgage in favor of Lender above referred to and shall supersede and cancel, but only insofar as would affect the priority between the mortgages hereinbefore specifically described, any prior agreements as to such subordination including, but not limited to, those provisions, if any contained in the Mortgage first above mentioned, which provide for the subordination of the lien or charge thereof to another mortgage or mortgages.

Beneficiary declares, agrees and acknowledges that:

(a) It consents to and approves (i) all provisions of the note and Mortgage in favor of Lender above referred to, and (ii) all agreements, including but not limited to any loan or escrow agreements, between Owner and Lender for the disbursement of the proceeds of Lender's loan.

(b) Lender in making disbursements pursuant to any such agreement is under no obligation or duty to, nor has Lender represented that it will, see to the application of such proceeds by the person or persons to whom Lender disburses such proceeds and any application or use of such proceeds for purposes other than those provided for in such agreement or agreements shall not defeat the subordination herein made in whole or in part.

(c) It intentionally waives, relinquishes and subordinates the lien or charge of the Mortgage first above mentioned in favor of the lien or charge upon said land of the Mortgage in favor of Lender above referred to and understands that in reliance upon, and in consideration of, this waiver, relinquishment and subordination specific loans and advances are being and will be made and, as part and parcel thereof, specific monetary and other obligations are being and will be entered into which would not be made or entered unto but for said reliance upon this waiver, relinquishment and subordination; and

(d) An endorsement has been placed upon the note secured by the Mortgage first above-mentioned that said Mortgage has by this instrument been subordinated to the lien or charge of the Mortgage in favor of Lender above referred to.

NOTICE: THIS SUBORDINATION AGREEMENT CONTAINS A PROVISION WHICH ALLOWS THE PERSON OBLIGATED ON YOUR REAL PROPERTY SECURITY TO OBTAIN A LOAN A PORTION OF WHICH MAY BE EXPENDED FOR OTHER PURPOSES THAN IMPROVEMENT OF LAND.

IN WITNESS whereof, THE PARTY (IES) hereunto sets his hand this 6th day of Nov. 2012

CITY OF HATTIESBURG, MISSISSIPPI

BY: _____

Printed Name & Title: Johnny L. DuPree, Mayor

Witness Signature: _____

Witness Name (Print): Eddie Myers

Witness Signature: _____

Witness Name (Print): Andrew Ellard

STATE OF Miss

SS.

COUNTY OF Forrest

The foregoing instrument was acknowledged before me this 6 day of November, 20 12, by Marilyn Schwandt (name of officer or agent) as Deputy City Clerk / Notary, (title of officer or agent) of **CITY OF HATTIESBURG, MISSISSIPPI**, a Municipal Corporation (state or place of incorporation) corporation, on behalf of the corporation.

NOTARYSTAMP/SEAL

STATE OF MISSISSIPPI
MARILYN T. SCHWANDT
ID NO. 3859
Commission Expires
07/08/2015
NOTARY PUBLIC
FORREST COUNTY

Marilyn T. Schwandt
Notary public
My Commission Expires: 7/8/15

IT IS RECOMMENDED THAT, PRIOR TO THE EXECUTION OF THIS SUBORDINATION AGREEMENT, THE PARTIES CONSULT WITH THEIR ATTORNEYS WITH RESPECT THERETO.

From: (866) 826-9210
Daniel Stonelake
RELS SETTLEMENT SERVICES
5700 Smetana Drive, Suite 400

Minnetonka, MN 55343

Origin ID: GPZA

FedEx Express

J122012071 80325

Ship Date: 17OCT12
ActWgt: 1.0 LB
CAD: 3425524/INET3300

Delivery Address Bar Code

SHIP TO: (800) 501-2766

BILL SENDER

Postclosing
Rels Settlement Services
1 Corelogice Drive
BLD 6 FLR 4 STE 300
WESTLAKE, TX 76262

Ref # 0344809124
Invoice #
PO #
Dept # 4003/0344809124/RCP

THU - 18 OCT A2
STANDARD OVERNIGHT

TRK# 7992 1962 0393
0201

76262
TX-US
DFW

XH MWLA

515G1/9CCB/AA44

After printing this label:
1. Use the 'Print' button on this page to print your label to your laser or inkjet printer.
2. Fold the printed page along the horizontal line.
3. Place label in shipping pouch and affix it to your shipment so that the barcode portion of the label can be read and scanned.

Warning: Use only the printed original label for shipping. Using a photocopy of this label for shipping purposes is fraudulent and could result in additional billing charges, along with the cancellation of your FedEx account number.
Use of this system constitutes your agreement to the service conditions in the current FedEx Service Guide, available on fedex.com.FedEx will not be responsible for any claim in excess of $100 per package, whether the result of loss, damage, delay, non-delivery,misdelivery,or misinformation, unless you declare a higher value, pay an additional charge, document your actual loss and file a timely claim.Limitations found in the current FedEx Service Guide apply. Your right to recover from FedEx for any loss, including intrinsic value of the package, loss of sales, income interest, profit, attorney's fees, costs, and other forms of damage whether direct, incidental,consequential, or special is limited to the greater of $100 or the authorized declared value. Recovery cannot exceed actual documented loss.Maximum for items of extraordinary value is $500, e.g. jewelry, precious metals, negotiable instruments and other items listed in our ServiceGuide. Written claims must be filed within strict time limits, see current FedEx Service Guide.

City of Hattiesburg, MS

200 Forrest St.
P.O. Box 1898
Hattiesburg, MS 39401

Master

File Number: 2012-1285

File ID:	2012-1285	**Type:**	Regular Agenda Item	**Status:**	Approved
Version:	1	**Reference:**		**In Control:**	City Council
				File Created:	10/25/2012
Brief Title:	Blue Roof Initiative Grant Award - 541 North 19th Avenue			**Final Action:**	11/06/2012
				Minute Book Number:	MB2012-1/384

Title:

Approve and authorize Mayor to execute in triplicate a Contractor and Owner Agreement and a Housing Blue Roof Initiative Grant Award to Dorothy Miller of 541 North 19th Avenue in an amount not to exceed $10, 000 according to the Housing Rehabilitation and Housing Programs Manual Section VII (E). {Entitlement}

Notes:

Sponsors:		**Enactment Date:**	
Attachments:	COHCD Contractor & D. Miller Agreement 10.25.12, executed COHCD Contractor & D. Miller Agreement 10.25.12 (3), Grant Agreement - Blue Roof Iniiative - D. Miller 10.25.12, executed Grant Agreement - Blue Roof Iniiative - D. Miller 10.25.12 (3)	**Enactment Number:**	
Contact:		**Meeting Date:**	11/06/2012
Drafter:	Kevin Jordan	**Effective Date:**	

History of Legislative File

Ver-sion:	Acting Body:	Date:	Action:	Sent To:	Due Date:	Return Date:	Result:
1	City Council	11/06/2012	Approve and Authorize				Pass

Action Text: A MOTION was made by Council Member Delgado and seconded by Council Member Naylor to Approve and authorize Mayor to execute in triplicate a Contractor and Owner Agreement and a Housing Blue Roof Initiative Grant Award to Dorothy Miller of 541 North 19th Avenue in an amount not to exceed $10, 000 according to the Housing Rehabilitation and Housing Programs Manual Section VII (E). {Entitlement}

There being no discussion, the Motion received the affirmative vote of the Council as follows:

Yeas: 5 - Bradley, Delgado, Carroll, Ware and Naylor

Nays: 0

Yea:	5	President Bradley Council Member Delgado Council Member Carroll Vice President Ware Council Member Naylor
TEL-No Vote:	0	

Text of Legislative File 2012-1285

Title

Approve and authorize Mayor to execute in triplicate a Contractor and Owner Agreement and a Housing Blue Roof Initiative Grant Award to Dorothy Miller of 541 North 19th Avenue in an amount not to exceed $10, 000 according to the Housing Rehabilitation and Housing Programs Manual Section VII (E). {Entitlement}

Summary

Budget Information

Expenditure Type

Purchasing Item

Publication Information

CITY OF HATTIESBURG COMMUNITY DEVELOPMENT
Homeowner Blue Roof Initiative Program
Project HBRIP

Contractor & Owner Agreement

THIS AGREEMENT, made the 6th day of November, 2012and between the City of Hattiesburg Community Development Department (COHCD) Homeowner Blue Roof Initiative Program (HBRIP) and Dorothy Miller of 541 North 19th Avenue, Hereinafter called Owner, and _____, with its principal place of business located at _____, Hattiesburg, Mississippi 39401, hereinafter called the Contractor.

WITNESSETH

1. SCOPE OF WORK

The Contractor shall furnish all labor, materials, tools, supplies, supervision and other services and shall perform all operations necessary and required to satisfactorily complete the work shown on the drawings and described in the specifications and other Contract Documents prepared for the 541 North 19th Avenue Project by COHCD, said work to be preformed on the structure(s)/property located at 541 North 19th Avenue, Hattiesburg, Mississippi, all in accordance with terms of the Contract Documents.

2. TIME OF COMPLETION

The Owner/COHCD shall issue a written Notice to Proceed within 5 days from the date of the Owner/COHCD signing of this Agreement, accepting the Contractor's bid and proposal, providing the Contractor has obtained the necessary permits and related documents (if needed) and has presented them to the Owner/COHCD. If the Notice to Proceed is not received by the Contractor within this 5 day period, the Contractor may at his option terminate his obligation under this Agreement, provided he has obtained the necessary permits and related documentation within (15) days from the date of the Owner's/COHCD's signing of this Agreement, the Owner/COHCD has the option of terminating the Contract for cause.

The Contractor shall commence working within Ten (10) calendar days after issuance of the Notice to Proceed, and it is to be completed within sixty (60) days after the issuance of the Notice to Proceed**. Fifty dollars ($50.00) per day will be deducted from the final payment for every day project rehabilitation completion exceeds sixty (60) days.** The Owner/COHCD has the option of terminating the Contract for failure to commence work within the time allowed by the Contract Agreement.

3. COMPENSATION

As full consideration for the satisfactory performance by Contractor of this Contract, the Owner/COHCD shall pay to the Contractor the sum of _____ ( ) subject to any written additions or deductions provided and incorporated herein, in accordance with the payment provisions of this Contract.

4. CHANGES IN THE WORK

The Owner/COHCD without invalidating the Contract may order Changes in Work consisting of additions, deletions, or modifications, the Contract Sum and the Contract Time being adjusted accordingly. All such Changes in the Work shall be authorized by written Change Order signed by the Owner and COHCD or their duly authorized agent.

The Contract Sum and the Contract Time may be changed by a Change Order. The cost or credit to the Owner/COHCD from a Change in the Work shall be determined by mutual agreement before executing the Work involved.

5. CORRECTION OF WORK

The Contractor shall correct any work that fails to conform to the requirements of the Contract Documents where such failure to conform appears during the progress of the Work, and shall remedy any defects due to faulty materials, equipment or workmanship which appears within a period of one year from the Date of substantial Completion of the Contract or within such longer period of time as may be prescribed by law or by the terms of any applicable special guarantee required by the Contract Documents. The provisions of this statement apply to Work done by Subcontractors as well as to Work done by direct employees of the Contractor.

6. TERMINATION BY THE OWNER

If the Contractor defaults or neglects to carry out the Work in accordance with the Contract Documents or fails to perform any provisions of the Contract, the Owner/COHCD may, after seven days written notice to the Contractor and without prejudice to any other remedy they may have, make good such deficiencies and may deduct the cost thereof from the payment then or thereafter due the Contractor. If the Contractor's workmanship is deficient and he fails to remedy such work within a specified time period, the Owner/COHCD, at their option, may terminate the Contract and take possession of the site and all materials, supplies and equipment incorporated in the work thereon. The Owner/COHCD may finish the Work by whatever method they may deem expedient. If the unpaid balance of the Contract Sum exceeds the expenses of finishing the Work, such excess shall be paid to the Contractor for approved work completed, but if such expense exceeds such unpaid balance, the Contractor shall pay the difference to the Owner/COHCD.

7. PAYMENTS/DRAWS

Payments may be withheld on account of (1) defective Work not remedied, (2) claims filed, (3) failure of the Contractor to make payments properly to Subcontractors or for labor, materials or equipment, (4) damage to another contractor or (5) unsatisfactory prosecution of the Work of the Contractor.

Final payment shall not be due until the Contractor has delivered to the Owner/CHOCD filed lien waivers/releases, indemnifying them against any lien.

The making of final payment shall constitute a waiver of all claims by the Owner/COHCD except those arising from (1) unsettled liens, (2) faulty or defective

Work appearing after Substantial Completion, (3) failure of Work to comply with the Requirements of the Contract Documents or (4) terms of any special guarantees required by the Contract Documents. The acceptance of the final payment shall constitute a wavier of all claims by the Contractor except those preciously made in writing and still unsettled.

1. _____
2. _____
3. _____
4. _____
5. _____

8. ACCEPTANCE AND FINAL PAYMENT

Final payment shall be due thirty (30) days after completion and acceptance of the work, provided the Contract has been satisfactorily performed, subject to the provision of the General Conditions of the Contract.

9. DEED RESTRICTION

There will be deed restriction attached to 541 North 19th Avenue for three (3) years. Homeowner agrees to occupy the reconstructed home for three (3) years after reconstruction activities are completed. The homeowner agrees to pay the prorated grant amount and legal fees associated with securing repayment to the City of Hattiesburg in the event the property is sold, transferred or disposed of prior to the expiration of the three (3) year affordability period. **Homeowner acknowledges and agrees that this contract shall be binding on his/hers/their heirs, executors and assigns.**

10. ASSIGNMENT OF CONTRACT

This agreement may not be assigned to any Contractor or Agent of Contractor. IN WITNESS WHEREOF, the parties hereto executed this Agreement the _____ day of _____, 2012.

_____ _____

Dorothy Miller, Homeowner Date Spouse's Signature Date

City of Hattiesburg, Mississippi

By: _____
Johnny L. DuPree, Mayor

Date: _____

Attest: _____
City Clerk

Contractor

By: _____

Date: _____

Attest: _____

CITY OF HATTIESBURG COMMUNITY DEVELOPMENT
Homeowner Blue Roof Initiative Program
Project HBRIP

Contractor & Owner Agreement

THIS AGREEMENT, made the 6th day of November, 2012and between the City of Hattiesburg Community Development Department (COHCD) Homeowner Blue Roof Initiative Program (HBRIP) and Dorothy Miller of 541 North 19th Avenue, Hereinafter called Owner, and _____, with its principal place of business located at _____, Hattiesburg, Mississippi 39401, hereinafter called the Contractor.

WITNESSETH

1. SCOPE OF WORK

The Contractor shall furnish all labor, materials, tools, supplies, supervision and other services and shall perform all operations necessary and required to satisfactorily complete the work shown on the drawings and described in the specifications and other Contract Documents prepared for the 541 North 19th Avenue Project by COHCD, said work to be preformed on the structure(s)/property located at 541 North 19th Avenue, Hattiesburg, Mississippi, all in accordance with terms of the Contract Documents.

2. TIME OF COMPLETION

The Owner/COHCD shall issue a written Notice to Proceed within 5 days from the date of the Owner/COHCD signing of this Agreement, accepting the Contractor's bid and proposal, providing the Contractor has obtained the necessary permits and related documents (if needed) and has presented them to the Owner/COHCD. If the Notice to Proceed is not received by the Contractor within this 5 day period, the Contractor may at his option terminate his obligation under this Agreement, provided he has obtained the necessary permits and related documentation within (15) days from the date of the Owner's/COHCD's signing of this Agreement, the Owner/COHCD has the option of terminating the Contract for cause.

The Contractor shall commence working within Ten (10) calendar days after issuance of the Notice to Proceed, and it is to be completed within sixty (60) days after the issuance of the Notice to Proceed. **Fifty dollars ($50.00) per day will be deducted from the final payment for every day project rehabilitation completion exceeds sixty (60) days.** The Owner/COHCD has the option of terminating the Contract for failure to commence work within the time allowed by the Contract Agreement.

3. COMPENSATION

As full consideration for the satisfactory performance by Contractor of this Contract, the Owner/COHCD shall pay to the Contractor the sum of _____ ( ) subject to any written additions or deductions provided and incorporated herein, in accordance with the payment provisions of this Contract.

4. CHANGES IN THE WORK

The Owner/COHCD without invalidating the Contract may order Changes in Work consisting of additions, deletions, or modifications, the Contract Sum and the Contract Time being adjusted accordingly. All such Changes in the Work shall be authorized by written Change Order signed by the Owner and COHCD or their duly authorized agent.

The Contract Sum and the Contract Time may be changed by a Change Order. The cost or credit to the Owner/COHCD from a Change in the Work shall be determined by mutual agreement before executing the Work involved.

5. CORRECTION OF WORK

The Contractor shall correct any work that fails to conform to the requirements of the Contract Documents where such failure to conform appears during the progress of the Work, and shall remedy any defects due to faulty materials, equipment or workmanship which appears within a period of one year from the Date of substantial Completion of the Contract or within such longer period of time as may be prescribed by law or by the terms of any applicable special guarantee required by the Contract Documents. The provisions of this statement apply to Work done by Subcontractors as well as to Work done by direct employees of the Contractor.

6. TERMINATION BY THE OWNER

If the Contractor defaults or neglects to carry out the Work in accordance with the Contract Documents or fails to perform any provisions of the Contract, the Owner/COHCD may, after seven days written notice to the Contractor and without prejudice to any other remedy they may have, make good such deficiencies and may deduct the cost thereof from the payment then or thereafter due the Contractor. If the Contractor's workmanship is deficient and he fails to remedy such work within a specified time period, the Owner/COHCD, at their option, may terminate the Contract and take possession of the site and all materials, supplies and equipment incorporated in the work thereon. The Owner/COHCD may finish the Work by whatever method they may deem expedient. If the unpaid balance of the Contract Sum exceeds the expenses of finishing the Work, such excess shall be paid to the Contractor for approved work completed, but if such expense exceeds such unpaid balance, the Contractor shall pay the difference to the Owner/COHCD.

7. PAYMENTS/DRAWS

Payments may be withheld on account of (1) defective Work not remedied, (2) claims filed, (3) failure of the Contractor to make payments properly to Subcontractors or for labor, materials or equipment, (4) damage to another contractor or (5) unsatisfactory prosecution of the Work of the Contractor.

Final payment shall not be due until the Contractor has delivered to the Owner/CHOCD filed lien waivers/releases, indemnifying them against any lien.

The making of final payment shall constitute a waiver of all claims by the Owner/COHCD except those arising from (1) unsettled liens, (2) faulty or defective

Work appearing after Substantial Completion, (3) failure of Work to comply with the Requirements of the Contract Documents or (4) terms of any special guarantees required by the Contract Documents. The acceptance of the final payment shall constitute a wavier of all claims by the Contractor except those preciously made in writing and still unsettled.

1. _____
2. _____
3. _____
4. _____
5. _____

8. ACCEPTANCE AND FINAL PAYMENT

Final payment shall be due thirty (30) days after completion and acceptance of the work, provided the Contract has been satisfactorily performed, subject to the provision of the General Conditions of the Contract.

9. DEED RESTRICTION

There will be deed restriction attached to 541 North 19th Avenue for three (3) years. Homeowner agrees to occupy the reconstructed home for three (3) years after reconstruction activities are completed. The homeowner agrees to pay the prorated grant amount and legal fees associated with securing repayment to the City of Hattiesburg in the event the property is sold, transferred or disposed of prior to the expiration of the three (3) year affordability period. **Homeowner acknowledges and agrees that this contract shall be binding on his/hers/their heirs, executors and assigns.**

10. ASSIGNMENT OF CONTRACT

This agreement may not be assigned to any Contractor or Agent of Contractor. IN WITNESS WHEREOF, the parties hereto executed this Agreement the _____ day of _____, 2012.

_____
Dorothy Miller, Homeowner Date

_____
Spouse's Signature Date

City of Hattiesburg, Mississippi

By: _____
Johnny L. DuPree, Mayor

Date: 11-6-12

Attest: _____
City Clerk

Contractor

By: _____

Date: _____

Attest: _____

CITY OF HATTIESBURG
BLUE ROOF INITIATIVE
GRANT AWARD AGREEMENT

General Terms and Conditions

1. _____ I certify that I currently live in and own the home for which I am accepting repair assistance.

2. _____ I agree to remain in Hattiesburg during the course of the repairs being performed and to make my home accessible between the hours of 7:00 a.m. and 5:00 p.m., Monday through Friday, unless otherwise arranged.

3. _____ I understand that I am responsible for arrangements and costs associated with my relocation for the duration of the repair work as necessary.

4. _____ I understand that I am responsible for moving and/or storing any items as deemed necessary for the start-up and through completion of the approved repair work.

5. _____ I understand that the discovery of illegal activities or the use of verbal or physical threats of harm towards City employees, R3SM, Carpenter Helpers, contractor or workers will result in an immediate termination of all repair activities.

6. _____ I agree that the City has irrevocable rights and permission to use my name and to use, reproduce, exhibit, copyright and publish photographic images and/or videotaped images of me and/or my home for advertising, trade and/or any other lawful purpose.

7. _____ I certify that I am not an employee of the City of Hattiesburg, nor do I have an immediate family member who is an employee of the City.

8. _____ I hereby agree to occupy the home to be rehabilitated for a period of not less than **three (3)** years after completion of the repairs funded under in the Blue Roof Initiative Program.

9. _____ I agree to repay the prorated grant amount and legal fees associated with securing repayment to the City should I sale, transfer or dispose of the property prior to the expiration of the ***three* (3)** year affordability period.

10. _____ I understand that I cannot apply for another Housing Rehabilitation or Housing Repair Grant within the **one (1)** year affordability period.

11. _____ I hereby agree to maintain homeowner's insurance and when applicable, flood insurance.

12. _____ I hereby agree to maintain all county and city property taxes as they come due during the affordability period.

13. _____ I hereby agree to provide documentation required for case management activities, material cost from the City of Hattiesburg and labor cost for Carpenters Helper to participate in the blue roof repairs.

14. _____ I hereby agree that the completion of the repairs for which these grant funds are awarded shall constitute a complete work agreement and I will sign all the necessary paperwork to allow for payment to the contractor.

By my signature below I, **Dorothy Miller of 541 North 19th Avenue,** agree to all the terms of this grant and understand that failure to abide by any of the terms will result in forfeiture of my grant and/or repayment of expended grant funds this the _____ day of _____, 2012.

_____ Homeowner's Signature

_____ Spouse's Signature

GRANT AWARD

The Homeowner(s), Dorothy Miller of 541 North 19th Avenue, is hereby awarded a Blue Roof Initiative Grant for roof replacement/repair in an amount not to exceed $10,000.00, on this the 6th day of November, 2012.

City of Hattiesburg, Mississippi

By: _____
Johnny L. DuPree, Mayor

Date: _____

Attest: _____
City Clerk

Contractor

By: _____

Date: _____

Attest: _____

CITY OF HATTIESBURG
BLUE ROOF INITIATIVE
GRANT AWARD AGREEMENT

General Terms and Conditions

1. _____ I certify that I currently live in and own the home for which I am accepting repair assistance.

2. _____ I agree to remain in Hattiesburg during the course of the repairs being performed and to make my home accessible between the hours of 7:00 a.m. and 5:00 p.m., Monday through Friday, unless otherwise arranged.

3. _____ I understand that I am responsible for arrangements and costs associated with my relocation for the duration of the repair work as necessary.

4. _____ I understand that I am responsible for moving and/or storing any items as deemed necessary for the start-up and through completion of the approved repair work.

5. _____ I understand that the discovery of illegal activities or the use of verbal or physical threats of harm towards City employees, R3SM, Carpenter Helpers, contractor or workers will result in an immediate termination of all repair activities.

6. _____ I agree that the City has irrevocable rights and permission to use my name and to use, reproduce, exhibit, copyright and publish photographic images and/or videotaped images of me and/or my home for advertising, trade and/or any other lawful purpose.

7. _____ I certify that I am not an employee of the City of Hattiesburg, nor do I have an immediate family member who is an employee of the City.

8. _____ I hereby agree to occupy the home to be rehabilitated for a period of not less than **three (3)** years after completion of the repairs funded under in the Blue Roof Initiative Program.

9. _____ I agree to repay the prorated grant amount and legal fees associated with securing repayment to the City should I sale, transfer or dispose of the property prior to the expiration of the ***three*** **(3)** year affordability period.

10. _____ I understand that I cannot apply for another Housing Rehabilitation or Housing Repair Grant within the **one (1)** year affordability period.

11. _____ I hereby agree to maintain homeowner's insurance and when applicable, flood insurance.

12. _____ I hereby agree to maintain all county and city property taxes as they come due during the affordability period.

13. _____ I hereby agree to provide documentation required for case management activities, material cost from the City of Hattiesburg and labor cost for Carpenters Helper to participate in the blue roof repairs.

14. _____ I hereby agree that the completion of the repairs for which these grant funds are awarded shall constitute a complete work agreement and I will sign all the necessary paperwork to allow for payment to the contractor.

By my signature below I, **Dorothy Miller of 541 North 19th Avenue,** agree to all the terms of this grant and understand that failure to abide by any of the terms will result in forfeiture of my grant and/or repayment of expended grant funds this the _____ day of _____, 2012.

_____ Homeowner's Signature

_____ Spouse's Signature

GRANT AWARD

The Homeowner(s), Dorothy Miller of 541 North 19th Avenue, is hereby awarded a Blue Roof Initiative Grant for roof replacement/repair in an amount not to exceed $10,000.00, on this the 6th day of November, 2012.

City of Hattiesburg, Mississippi

By: _____
Johnny L. DuPree, Mayor

Date: 11-6-12

Attest: _____
City Clerk

Contractor

By: _____

Date: _____

Attest: _____

City of Hattiesburg, MS

200 Forrest St.
P.O. Box 1898
Hattiesburg, MS 39401

Master

File Number: 2012-1286

File ID:	2012-1286	**Type:**	Regular Agenda Item	**Status:**	Passed
Version:	1	**Reference:**		**In Control:**	City Council
				File Created:	10/25/2012
Brief Title:	Blue Roof Initiative Grant Award - 124 Orchard Street			**Final Action:**	
				Minute Book Number:	MB2012-1/384

Title:

Amend Blue Roof Initiative Grant Award Agreement found at MB 2012-1/68, from $5,000.00 to $10,000.00; Approve and Authorize Mayor to execute in triplicate a Blue Roof Initiative Grant Award to Shirley Powell of 124 Orchard Street in an amount not to exceed $10,000.00 for roof replacement/repair materials.

Notes:

Sponsors:		**Enactment Date:**	
Attachments:	Grant Agreement - Blue Roof Iniiative - S. Powell 10.25.12, Executed blue roof	**Enactment Number:**	
Contact:		**Meeting Date:**	11/06/2012
Drafter:	Kevin Jordan	**Effective Date:**	

History of Legislative File

Version:	Acting Body:	Date:	Action:	Sent To:	Due Date:	Return Date:	Result:
1	City Council	11/06/2012	Amend				Pass

Action Text: A MOTION was made by Council Member Delgado and seconded by Council Member Naylor to Amend Blue Roof Initiative Grant Award Agreement found at MB 2012-1/68, from $5,000.00 to $10,000.00;Approve and Authorize Mayor to execute in triplicate a Blue Roof Initiative Grant Award to Shirley Powell of 124 Orchard Street in an amount not to exceed $10,000.00 for roof replacement/repair materials.

There being no discussion, the Motion received the affirmative vote of the Council as follows:

Yeas: 5 - Bradley, Delgado, Carroll, Ware and Naylor

Nays: 0

Yea:	5	President Bradley Council Member Delgado Council Member Carroll Vice President Ware Council Member Naylor
ΓEL-No Vote:	0	

Text of Legislative File 2012-1286

Title

Amend Blue Roof Initiative Grant Award Agreement found at MB 2012-1/68, from $5,000.00 to $10,000.00; Approve and Authorize Mayor to execute in triplicate a Blue Roof Initiative Grant Award to Shirley Powell of 124 Orchard Street in an amount not to exceed $10,000.00 for roof replacement/repair materials.

Summary

Budget Information

Expenditure Type

Purchasing Item

Publication Information

CITY OF HATTIESBURG
BLUE ROOF INITIATIVE
GRANT AWARD AGREEMENT

General Terms and Conditions

1. _____ I certify that I currently live in and own the home for which I am accepting repair assistance.

2. _____ I agree to remain in Hattiesburg during the course of the repairs being performed and to make my home accessible between the hours of 7:00 a.m. and 5:00 p.m., Monday through Friday, unless otherwise arranged.

3. _____ I understand that I am responsible for arrangements and costs associated with my relocation for the duration of the repair work as necessary.

4. _____ I understand that I am responsible for moving and/or storing any items as deemed necessary for the start-up and through completion of the approved repair work.

5. _____ I understand that the discovery of illegal activities or the use of verbal or physical threats of harm towards City employees, R3SM, Carpenter Helpers, contractor or workers will result in an immediate termination of all repair activities.

6. _____ I agree that the City has irrevocable rights and permission to use my name and to use, reproduce, exhibit, copyright and publish photographic images and/or videotaped images of me and/or my home for advertising, trade and/or any other lawful purpose.

7. _____ I certify that I am not an employee of the City of Hattiesburg, nor do I have an immediate family member who is an employee of the City.

8. _____ I hereby agree to occupy the home to be rehabilitated for a period of not less than **three (3)** years after completion of the repairs funded under in the Blue Roof Initiative Program.

9. _____ I agree to repay the prorated grant amount and legal fees associated with securing repayment to the City should I sale, transfer or dispose of the property prior to the expiration of the ***three*** **(3)** year affordability period.

10. _____ I understand that I cannot apply for another Housing Rehabilitation or Housing Repair Grant within the **one (1)** year affordability period.

11. _____ I hereby agree to maintain homeowner's insurance and when applicable, flood insurance.

12. _____ I hereby agree to maintain all county and city property taxes as they come due during the affordability period.

13. _____ I hereby agree to provide documentation required for case management activities from R3SM, material cost from the City of Hattiesburg and labor cost for Carpenters Helper to participate in the blue roof repairs.

14. _____ I hereby agree that the completion of the repairs for which these grant funds are awarded shall constitute a complete work agreement and I will sign all the necessary paperwork to allow for payment to the contractor.

By my signature below I, **Shirley Powell of 124 Orchard Street,** agree to all the terms of this grant and understand that failure to abide by any of the terms will result in forfeiture of my grant and/or repayment of expended grant funds this the _____ day of _____, 2012.

_____ _____
Homeowner's Signature Spouse's Signature

GRANT AWARD
The Homeowner(s), Shirley Powell of 124 Orchard Street, is hereby awarded a Blue Roof Initiative Grant for roof replacement/repair in an amount not to exceed $10,000.00, on this the 6th day of November, 2012.

City of Hattiesburg, Mississippi

By: _____
Johnny L. DuPree, Mayor

Date: _____

Attest: _____
City Clerk

Contractor

By: _____

Date: _____

Attest: _____

CITY OF HATTIESBURG
BLUE ROOF INITIATIVE
GRANT AWARD AGREEMENT

General Terms and Conditions

1. SSP I certify that I currently live in and own the home for which I am accepting repair assistance.

2. SSP I agree to remain in Hattiesburg during the course of the repairs being performed and to make my home accessible between the hours of 7:00 a.m. and 5:00 p.m., Monday through Friday, unless otherwise arranged.

3. SSP I understand that I am responsible for arrangements and costs associated with my relocation for the duration of the repair work as necessary.

4. SSP I understand that I am responsible for moving and/or storing any items as deemed necessary for the start-up and through completion of the approved repair work.

5. SSP I understand that the discovery of illegal activities or the use of verbal or physical threats of harm towards City employees, R3SM, Carpenter Helpers, contractor or workers will result in an immediate termination of all repair activities.

6. SSP I agree that the City has irrevocable rights and permission to use my name and to use, reproduce, exhibit, copyright and publish photographic images and/or videotaped images of me and/or my home for advertising, trade and/or any other lawful purpose.

7. SSP I certify that I am not an employee of the City of Hattiesburg, nor do I have an immediate family member who is an employee of the City.

8. SSP I hereby agree to occupy the home to be rehabilitated for a period of not less than **three (3)** years after completion of the repairs funded under in the Blue Roof Initiative Program.

9. SSP I agree to repay the prorated grant amount and legal fees associated with securing repayment to the City should I sale, transfer or dispose of the property prior to the expiration of the ***three*** **(3)** year affordability period.

10. SSP I understand that I cannot apply for another Housing Rehabilitation or Housing Repair Grant within the **one (1)** year affordability period.

11. SSP I hereby agree to maintain homeowner's insurance and when applicable, flood insurance.

12. SSP I hereby agree to maintain all county and city property taxes as they come due during the affordability period.

13. SSP I hereby agree to provide documentation required for case management activities from R3SM, material cost from the City of Hattiesburg and labor cost for Carpenters Helper to participate in the blue roof repairs.

14. SSP I hereby agree that the completion of the repairs for which these grant funds are awarded shall constitute a complete work agreement and I will sign all the necessary paperwork to allow for payment to the contractor.

By my signature below I, **Shirley Powell of 124 Orchard Street,** agree to all the terms of this grant and understand that failure to abide by any of the terms will result in forfeiture of my grant and/or repayment of expended grant funds this the 4th day of December, 2012.

Shirley S. Powell
Homeowner's Signature

Spouse's Signature

GRANT AWARD

The Homeowner(s), Shirley Powell of 124 Orchard Street, is hereby awarded a Blue Roof Initiative Grant for roof replacement/repair in an amount not to exceed $10,000.00, on this the 6th day of November, 2012.

City of Hattiesburg, Mississippi

By: Johnny L. DuPree, Mayor

Date: 11-6-12

Attest: Eddie R. Myers
City Clerk

Contractor

By:

Date: 12-3-12

Attest:

City of Hattiesburg, MS

200 Forrest St.
P.O. Box 1898
Hattiesburg, MS 39401

Master

File Number: 2012-1306

File ID:	2012-1306	**Type:**	Regular Agenda Item	**Status:**	Passed
Version:	1	**Reference:**		**In Control:**	City Council
				File Created:	10/30/2012
Brief Title:	Commercial Rehabilitation Award - Domestic Abuse Family Shelter			**Final Action:**	11/06/2012
				Minute Book Number:	MB2012-1/385

Title:

Approve Commercial Rehabilitation Assistance Award to Domestic Abuse Family Shelter of 912 North Main Street, Becky Sims, Director, in an amount not to exceed $2,000 and authorize the Mayor to execute Subrecipient Agreement in connection with the same. {Entitlements}

Notes:

Sponsors:		**Enactment Date:**	
Attachments:	Commercial Rehab Agreement - Domestic Abuse Family Shelter, executed Commercial Rehab Agreement - Domestic Abuse Family Shelter, Exhibit A - Domestic Abuse Family Shelter	**Enactment Number:**	
Contact:		**Meeting Date:**	11/06/2012
Drafter:		**Effective Date:**	

History of Legislative File

Version:	Acting Body:	Date:	Action:	Sent To:	Due Date:	Return Date:	Result:
1	City Council	11/06/2012	Approve				Pass

Action Text: A MOTION was made by Council Member Delgado and seconded by Council Member Naylor to Approve Commercial Rehabilitation Assistance Award to Domestic Abuse Family Shelter of 912 North Main Street, Becky Sims, Director, in an amount not to exceed $2,000 and authorize the Mayor to execute Subrecipient Agreement in connection with the same. {Entitlements}

There being no discussion, the Motion received the affirmative vote of the Council as follows:

Yeas: 5 - Bradley, Delgado, Carroll, Ware and Naylor

Nays: 0

Yea:	5	President Bradley Council Member Delgado Council Member Carroll Vice President Ware Council Member Naylor
ΓEL-No Vote:	0	

Text of Legislative File 2012-1306

Title

Approve Commercial Rehabilitation Assistance Award to Domestic Abuse Family Shelter of 912 North Main Street, Becky Sims, Director, in an amount not to exceed $2,000 and authorize the Mayor to execute Subrecipient Agreement in connection with the same. {Entitlements}

Summary

Commercial Rehabilitation Award - Domestic Abuse Family Shelter

Budget Information

Expenditure Type

Purchasing Item

Publication Information

CITY OF HATTIESBURG

COMMUNITY DEVELOPEMNT BLOCK GRANT (CDBG)
COMMERCIAL REHAB ASSISTANCE AGREEMENT

Domestic Abuse Family Shelter

THIS contract (hereinafter the "AGREEMENT"), is made and entered into this **sixth (6th) day of November, 2012** by and between the CITY OF HATTIESBURG, MISSISSIPPI, (herein called the "CITY"), located at 200 Forrest Street, Hattiesburg, Mississippi 39401, represented by the **Hattiesburg Historic Downtown Association** as a CDBG Program Administrator for the City's Commercial Rehabilitation Program, and **Domestic Abuse Family Shelter**, a non-profit Corporation (hereinafter referred to as the "Business" or "Subrecipient"), located at **912 North Main Street** in Hattiesburg, Mississippi, and represented by Becky Sims for an amount not to exceed **$2,000.00** and which shall terminate on or before the **thirty-first (31st) day of March 2013**, unless amended by written instrument as provided for herein.

WHEREAS, the CITY has engaged the Hattiesburg Historic Downtown Association as a subrecipient – to act in the City's stead for the administration of Commercial Rehabilitation projects to assist the CITY in the improvement of facades, exteriors, and streetscapes along business corridors of low-income areas, and as such, references to "CITY" hereinafter refer to the Hattiesburg Historic Downtown Association.

WHEREAS, the CITY wishes to engage the BUSINESS to assist the CITY in utilizing such funds for: the improvement of facades, exteriors, and streetscapes along business corridors of low-income areas.

WHEREAS, such an activity meets a U.S. Department of Housing and Urban Development National Objective as it related to the CITY's Community Development Black Grant Program.

Now, therefore, in consideration of the mutual covenants and obligations herein set forth, the parties understand and agree as follows:

FUNDING SOURCE: Community Development Block Grant Funds

AMOUNT: not to exceed $2,000.00

TERM OF AGREEMENT: Effective November 6, 2012 through March 31, 2013.

SCOPE OF WORK: The OWNER will utilize CDBG Funds for materials and contracted labor required to repair and paint certain areas of the exterior, and to improve landscaping in areas visible from the street (all contingent on proper permitting if applicable).

The BUSINESS will utilize CDBG Funds according to Exhibit "B."

The BUSINESS must submit Quarterly Reports to the CITY, which will include:

(i) A detailed account of transactions in which CDBG Funds were utilized,

(ii) Receipts or other confirming documentation of those transactions, and

(iii) A brief narrative of the progress the BUSINESS is making in relation to the Scope of Work described herein.

Quarterly Reports are due December 20th and March 20th. The CITY may request additional information at a later date.

The CITY will schedule an onsite monitoring visit approximately half way through the term of the Agreement. The CITY may also conduct such an inspection at any given time as is necessary and appropriate throughout the term of the Agreement. The BUSINESS shall permit the Department and other persons duly authorized appropriate access for such inspection.

BUDGET (CDBG funds): The BUSINESS is approved to utilize CDBG funding according to the following budget, and it is expected that the BUSINESS will follow the budget as closely as administratively feasible. The amounts below may differ from the proposed budget in the BUSINESS's Application/Proposal.

Repair & Painting (materials and labor)	$ 2,000.00
Landscaping	$ 0.00
Miscellaneous (requires prior staff review and approval)	$ 0.00
TOTAL	**$ 2,000.00**

It is understood that there may be circumstances that lead to a budget adjustment. Cumulative adjustments to line items that are less than 10% may be made without prior approval, but should be noted on the next request for funds or periodic report. Cumulative adjustments of more than 10% require a formal amendment. Any line items listed with a $0.00 budget are included as line items into which the BUSINESS may adjust funds, if needed and with approval, within the allowed 10%.

SPECIAL CONDITIONS: Exhibit A, attached, includes the BUSINESS's Application for CDBG funding and proposal as originally submitted. The Exhibit is included strictly as a reference of the broader purpose of the agency and/or the program and its budget information, which may serve as evidence that the program will receive other financial resources. Significant portions of the proposed program may have been added to or taken away in drafting the final Agreement, contained herein.

ARTICLE I

Exhibits and Definitions

1.1 EXHIBITS: Attached hereto and forming a part of this Agreement are the following Exhibits:

EXHIBIT A: Original Assistance Application. References to "Work Program" may imply the attached original application, but the Scope of Work contained herein is the driving purpose and scope of the agreement.

EXHIBIT B: Budget: Complete Budget information is contained within the Scope of Work section.

1.2 DEFINITIONS: As used herein the following terms shall mean:

Act or 24 CFR 570: Title I of the Housing and Community Development Act of 1974, as amended

Agreement Records: Any and all books, records, documents, information, data, papers, letters, materials, and computerized or electronic storage data and media, whether written, printed, computerized, electronic or electrical, however collected or preserved which is or was produced, developed, maintained, completed, received or compiled by or at the direction of the BUSINESS or any subcontractor in carrying out the duties and obligations required by the terms of this Agreement, including, but not limited to, financial books and records, ledgers, drawings, maps, pamphlets, designs, electronic tapes, computer drives and diskettes or surveys.

CDBG Program: Community Development Block Grant Program

CDBG Requirements: The requirements contained in 24 CFR Part 570, and related and triggered Federal requirements

Department: The City of Hattiesburg Department of Federal & State Programs

Federal Award: Any federal funds received by the SUBRECIPIENT from any source during the period of time in which the SUBRECIPIENT is performing the obligations set forth in this Agreement.

Low- and Moderate-Income Person: A member of a low- or moderate-income household whose income is within specific income levels set forth by U.S. HUD for the area

U.S. HUD or HUD: The United States Department of Housing and Urban Development

ARTICLE II

Basic Requirements

The following documents must be approved by the CITY and must be on file with the Department prior to the CITY's execution of this Agreement:

2.1 The Business Plan and Proposal (hereinafter referred to as "Work Program") submitted by the BUSINESS to the CITY which shall become attached hereto as Exhibit "A" to this Agreement and shall include the following:

2.1.1 The Work Program shall detail the activities to be carried out by the BUSINESS. It should specifically describe the activities to be carried out as a result of the expenditure of CDBG funds. Where appropriate it should list measurable objectives, define the who, what, where and when of the project, and in general detail how these activities will ensure that the intended beneficiaries will be served.

2.1.2 The schedule of activities and measurable objectives play an essential role in the grant management system. The schedule should provide projected milestones and deadlines for the accomplishment of tasks in carrying out the Work Program. These projected milestones and deadlines are a basis for measuring actual progress during the term of this Agreement. These items shall be in sufficient detail to provide a sound basis for the CITY to effectively monitor performance by the BUSINESS under this Agreement.

2.2 The Compensation and Budget Summary attached hereto as Exhibit "B", which shall include completion of the BUSINESS's Budget.

2.3 All other documentation reasonably required by the CITY.

ARTICLE III
Terms and Procedures

3.1 City Authorization: For the purpose of this Agreement, the Department will act on behalf of the CITY in the fiscal control, programmatic monitoring and modification of this Agreement, except as otherwise provided by in this Agreement.

3.2 Effective Date and Term: The effective date of this Agreement shall be October 16, 2012 through March 31, 2013. This is the timeframe in which the BUSINESS has to draw and utilize the funds made available as a part of this agreement. This is also the timeframe in which the BUSINESS will be required to provide all evidence and documentation that the agreement was successfully fulfilled and that funds were expended for eligible uses.

3.2.1 The BUSINESS's obligations related to this Agreement extend beyond the basic effective dates, as the BUSINESS is required to retain records for a period of five (5) years. Record retention requirements are generally five (5) years from the closeout of the agreement, but may extend further as a result of any audit or finding related to the use of funds after the effective dates have expired.

3.3 Obligations of the Business: The BUSINESS shall carry out the services and activities as prescribed in its Work Program, which is attached and incorporated herein and made a part of this Agreement, in a manner that is lawful, and satisfactory to the CITY, and

in accordance with the written policies, procedures, and requirements as prescribed in this Agreement, and set forth by HUD and the CITY.

3.4 Level of Service: Should start-up time for the Work Program be required or in the event of the occurrence of any delays in the activities hereunder, the BUSINESS shall immediately notify the Department in writing, giving all pertinent details and indicating when the Work Program shall begin and/or continue. It is understood and agreed that the BUSINESS shall maintain the level of activities and expenditures in existence prior to the execution of this Agreement. Any activities funded through or as a result of this Agreement shall not result in the displacement of employed workers, impair existing agreements for services or activities, or result in the substitution of funds allocated under this Agreement for other funds in connection with work which would have been performed in the absence of this Agreement.

ARTICLE IV
CDBG Funding and Disbursement Requirements

4.1 Compensation: The amount of compensation payable by the CITY to the BUSINESS shall be based on the rates, schedules and conditions described in Exhibit "B" attached hereto, which by this reference is incorporated into this Agreement.

4.2 Insurance: Intentionally deleted.

4.3 Financial Accountability: The CITY reserves the right to audit the records of the BUSINESS at any time during the performance of this Agreement and for a period of five (5) years after its expiration/termination. The BUSINESS agrees to provide all financial and other applicable records and documentation of service to the CITY. Any payment made shall be subject to reduction for amounts included in the related invoice, which are found by the CITY, on the basis of such audit and at its sole discretion, not to constitute reasonable and necessary expenditures. Any payment made to the BUSINESS is subject to reduction for overpayments on previously submitted invoices.

4.4 Recapture of Funds: The CITY reserves the right to recapture funds in the event that the BUSINESS shall fail: (i) to comply with the terms of this Agreement, or (ii) to accept conditions imposed by the CITY at the discretion of the federal, state and local agencies.

4.5 Contingency Clause: Funding pursuant to this Agreement is contingent on the availability of funds and continued authorization for CDBG Program activities, and is also subject to amendment or termination due to lack of funds or authorization, reduction of funds, and/or changes in regulations.

Article V
Audit

5.0 Audit: Intentionally deleted.

Article VI

Records and Reports

6.1 The BUSINESS shall establish and maintain sufficient records to enable the CITY to determine whether the BUSINESS has met the requirements of the CDBG Program. At a minimum, the following records shall be maintained by the BUSINESS:

6.1.1 Records providing a full description of each activity assisted (or being assisted) with CDBG Funds, including its location (if the activity has a geographical focus), the amount of CDBG Funds budgeted, obligated and expended for the activity, and the specific provision in 24 CFR Subpart C of the CDBG Program regulations under which the activity is eligible.

6.1.2 Records demonstrating that each activity undertaken meets one of the criteria set forth in 24 CFR 570.208 of the CDBG Program regulations. Where information on income by family size is required, the BUSINESS may substitute evidence establishing that the person assisted qualified under another program having income qualification criteria at least as restrictive as that used in the definition of "low- and moderate-income person" and "low- and moderate-income household" as set forth in 24 CFR 570.3; or, the BUSINESS may substitute a copy of a verifiable certification from the assisted person that his or her family/household income does not exceed the applicable income limit established in accordance with 24 CFR 570.3; or, the BUSINESS may substitute a notice that the assisted person is a referral from any governmental agency that determines persons to be "low- and moderate-income persons" based on HUD's criteria and agrees to maintain documentation supporting those determinations. Such records shall include the following information:

(i) For each activity determined to benefit low- and moderate-income persons, the income limits applied and the point in time when the benefit was determined.

6.1.3 Equal Opportunity Records containing:

(i) Data on the extent to which each racial and ethnic group and single-headed households (by gender of household head) have applied for, participated in, or benefited from, any program or activity funded in whole or in part with CDBG Funds. Such information shall be used only as a basis for further investigation relating to compliance with any requirement to attain or maintain any particular statistical measure by race, ethnicity, or gender in covered programs.

(ii) Documentation of actions undertaken to meet the requirements of 24 CFR 570.607(b) which implements Section 3 of the Housing and Urban Development Act of 1968, as amended (12 U.S.C. 1701U) relative to the hiring and training of low- and moderate-income persons and the use of local businesses.

6.1.4 Financial records, in accordance with the applicable requirements listed in 24 CFR 570.502.

6.1.5 Records required to be maintained in accordance with other applicable laws and regulations set forth in Subpart K of 24 CFR.

6.2 <u>Retention and Accessibility of Records</u>

6.2.1 The Department shall have the authority to review the BUSINESS's records, including Project and programmatic records and books of account, for a period of five (5) years from the expiration/termination of this Agreement (the "Retention Period"). All books of account and supporting documentation shall be kept by the BUSINESS at least until the expiration of the Retention Period. The BUSINESS shall maintain records sufficient to meet the requirements of 24 CFR 570. All records and reports required herein shall be retained and made accessible as provided hereunder. The BUSINESS further agrees to abide by federal and state laws pertaining to public records.

6.2.2 The BUSINESS shall include in all the Department approved subcontracts used to engage subcontractors to carry out any eligible substantive project or programmatic activities, as such activities are described in this Agreement and defined by the Department, each record-keeping and audit requirements detailed in this Agreement. The Department shall, in its sole discretion, determine when services are eligible substantive project and/or programmatic activities and subject to the audit and record-keeping requirements described in this Agreement.

6.2.3 If the CITY or the BUSINESS has received or given notice of any kind indicating and threatened or pending litigation, claim or audit arising out of the activities pursuant to the project, the activities and/or the Work Program or the terms of this Agreement, the Retention Period shall be extended until such time as the threatened or pending litigation, claim or audit is, in the sole and absolute discretion of the Department fully, completely and finally resolved.

6.2.4 The BUSINESS shall notify the Department in writing both during the pendency of this Agreement and after its expiration/termination as part of the final closeout procedure, of the address where all Agreement Records will be retained.

6.2.5 The BUSINESS shall obtain the prior written consent of the Department to the disposal of any Agreement Records within one (1) year after the expiration of the Retention Period.

6.3 Provision of Records

6.3.1 At any time, upon request by the Department, the BUSINESS shall provide all Agreement Records to the Department. The requested Agreement Records shall become the property of the Department without restriction, reservation, or limitation on their use. The Department shall have unlimited rights to all books, articles, or other copyrightable materials developed in the performance of this Agreement. These rights include the right of royalty-free, nonexclusive, and irrevocable license to reproduce, publish, or otherwise use, and to authorize others to use the Work Program for public purposes.

6.3.2 If the BUSINESS receives funds from, or is under regulatory control of other governmental agencies, and those agencies issue monitoring reports, regulatory examinations, or other similar reports, the BUSINESS shall provide a copy of each such report and any follow-up communications and reports to the Department immediately upon such issuance, unless such disclosure would be prohibited by any such issuing agency.

6.4 Monitoring: The BUSINESS shall permit the Department and other persons duly authorized by the Department to inspect all Agreement Records, facilities, goods, and activities of the BUSINESS which are in any way connected to the activities undertaken pursuant to the terms of this Agreement, and/or interview any clients, employees, subcontractors or assignees of the BUSINESS. Following such inspection or interviews, the Department will deliver to the BUSINESS a report of its findings. The BUSINESS will rectify all deficiencies cited by the Department within the specified period of time set forth in the report or provide the Department with a reasonable justification for not correcting the same. The Department will determine in its sole and absolute discretion whether or not the BUSINESS's justification is acceptable.

At the request of the CITY, the BUSINESS shall transmit to the CITY written statements of the BUSINES's official policies on specified issues relating to the BUSINESS's activities. The CITY will carry out monitoring and evaluation activities, including visits and observations by CITY staff; the BUSINESS shall ensure the cooperation of its employees and its Board members in such efforts. Any inconsistent, incomplete, or inadequate information either received by the CITY, or obtained through monitoring and evaluation by the CITY, shall constitute cause for the CITY to terminate this Agreement.

6.5 Related Parties: The BUSINESS shall report to the Department the name, purpose for and any and all other relevant information in connection with any related-party transaction. The term "related-party transaction" includes, but is not limited to, a for-profit or nonprofit subsidiary or affiliate organization, an organization with an overlapping Board of Directors and an organization for which the BUSINESS is responsible for appointing memberships. The BUSINESS shall report this information to the Department upon forming the relationship, or if already formed, shall report such relationship prior to or simultaneously with the execution of this Agreement. Any supplemental information shall be promptly reported to the Department.

ARTICLE VII
Other CDBG Program Requirements

7.1 The BUSINESS shall maintain current documentation that its activities are CDBG eligible in accordance with 24 CFR Part 570.201(o).

7.2 The BUSINESS shall ensure and maintain documentation that conclusively demonstrates that each activity assisted in whole or in part with CDBG Funds is an activity which provides benefit to low- and moderate-income persons.

7.3 The BUSINESS shall comply with all applicable provisions of 24 CFR Part 570 and shall carry out each activity in compliance with all applicable federal laws and regulations described therein.

7.4 The BUSINESS shall cooperate with the Department in informing the appropriate citizen participation structures, including the appropriate area committees, of the activities of the BUSINESS in adhering to the provisions of this Agreement. Representatives of the BUSINESS shall attend meetings of the appropriate committees

and citizen participation structures upon the request of the citizen participation officers or the Department.

7.5 The BUSINESS shall, to the greatest extent possible, give low- and moderate-income residents of the service area opportunities for training and employment.

7.6 The BUSINESS shall use the funds to provide general support to owner(s) of microenterprises or persons developing microenterprises eligible under 570.208(a)(2)(iii). No other activities will be funded under this Agreement, unless Work Program is amended in writing by mutual agreement.

7.7 The BUSINESS shall carry out its Work Program in compliance with all Federal laws and regulations, described in Subpart K of the CDBG Program regulation (24 CFR 570.600-612), which by this reference, is incorporated into and made a part of this Agreement.

7.8 The BUSINESS shall not assume the CITY's environmental responsibilities described in 24 CFR 570.604, of the CDBG Program regulations, and the CITY's responsibility for initiating the review process under Executive Order 12372.

7.9 Non-Discrimination: The BUSINESS shall not discriminate on the basis of race, color, national origin, sex, religion, age, marital or family status or handicap in connection with the activities and/or the Work Program or its performance under this Agreement. Furthermore, the BUSINESS agrees that no otherwise qualified individual shall, solely by reason of his/her race, sex, color, creed, national origin, age, marital status or handicap, be excluded from the participation in, be denied benefits of, or be subjected to discrimination under any program or activity receiving federal financial assistance.

7.10 The BUSINESS shall carry out its Work Program in compliance with all federal laws and regulations, including those described in Subpart K of the CDBG Program regulations (24 CFR 570.600-612).

7.11 The BUSINESS and its subcontractors shall comply with the Davis-Bacon Act, the Lead-Based Paint Poisoning Prevention Act, and any other applicable laws, ordinances and regulations.

7.12 The BUSINESS shall abide by the Federal Labor Standards provisions of U.S. HUD Form 4010, by reference incorporated herein as part of this Agreement.

7.13 Uniform Administrative Requirements: The BUSINESS shall comply with the requirements and standards of OMB Circular No. A-122, "Cost Principles for Non-Profit Organizations" and with the applicable requirements of 24 CFR Part 84 (the revised OMB Circular No. A-110).

7.14 Religious Organizations/Constitutional Prohibition: If the BUSINESS is or was created by a religious organization, the BUSINESS agrees that all CDBG Funds disbursed under this Agreement shall be subject to the conditions, restrictions, and limitations of 24 CFR Part 570.200(j). In accordance with the First Amendment of the United States Constitution, particularly regarding the relationship between church and State, as a general rule, CDBG assistance may not be used for religious activities or provided to entities with any limitation, whether directed or implied, on the beneficiaries of its activities on the basis of religion or participation in a religious activity, as provided in 24 CFR Part 570.200(j). The BUSINESS shall comply with those requirements and prohibitions when entering into subcontracts.

7.15 Reversion of Assets: Upon expiration/termination of this Agreement, the BUSINESS must transfer to the CITY any CDBG Funds on hand at the time of

expiration/termination and any accounts receivable attributable to the use of CDBG Funds.

7.16 Enforcement of this Agreement: Any violation of this Agreement that remains uncured thirty (30) days after the BUSINESS's receipt of notice from the CITY (by certified or registered mail) of such violation may, at the option of the CITY, be addressed by an action for damages or equitable relief, or any other remedy provided at law or in equity. In addition to the remedies of the CITY set forth herein, if the BUSINESS materially fails to comply with the terms of this Agreement, the CITY may suspend or terminate this Agreement in accordance with 24 CFR Part 85.43, as set forth more fully below in Article IX of this Agreement.

ARTICLE IX
Remedies, Suspension, Termination

9.1 Remedies for Noncompliance: The CITY retains the right to terminate this Agreement at any time prior to the completion of the services required pursuant to this Agreement without penalty to the CITY. In that event, notice of termination of this Agreement shall be in writing to the BUSINESS, who shall be paid for those services performed prior to the date of its receipt to the notice of termination. In no case, however, shall the CITY pay the BUSINESS an amount in excess of the total sum provided by this Agreement.

It is hereby understood by and between the CITY and the BUSINESS that any payment made in accordance with this Agreement to the BUSINESS shall be made only if the BUSINESS is not in default under the terms of this Agreement. If the BUSINESS is in default, the CITY shall not be obligated and shall not pay to the BUSINESS any sum whatsoever.

If the BUSINESS materially fails to comply with any term of this Agreement, the CITY may take one or more of the following courses of action:

9.1.1 Temporarily withhold cash payments pending correction of the deficiency by the BUSINESS, or such more severe enforcement action as the CITY determines is necessary or appropriate.

9.1.2 Disallow (that is, deny both the use of funds and matching credit) for all or part of the cost of the activity or action not in compliance.

9.1.3 Wholly or partly suspend or terminate the current CDBG Funds awarded to the BUSINESS.

9.1.4 Withhold further CDBG grants and/or loans for the BUSINESS.

9.1.5 Take all such other remedies that may be legally available.

Notwithstanding any other provision of this Agreement, if the BUSINESS materially fails to comply with any term of this Agreement, the BUSINESS, at the sole discretion of the CITY, shall pay to the CITY an amount equal to the current market value of any real property, under the BUSINESS's control, acquired or improved in whole or in part with CDBG Funds (including CDBG Funds provided to the BUSINESS in the form of a loan and/or grant), less any portion of the value attributable to expenditures of non-

CDBG Funds for the acquisition of, or improvement to, the property. The payment is Program Income to the CITY.

9.2 Suspension:

9.2.1 The Department may, for reasonable cause temporarily suspend the BUSINESS's operations and authority to obligate funds under this Agreement or withhold payments to the BUSINESS pending necessary corrective action by the BUSINESS, or both. Reasonable cause shall be determined by the Department in its sole and absolute discretion, and may include:

9.2.1.1 Ineffective or improper use of the CDBG Funds by the BUSINESS;

9.2.1.2 Failure by the BUSINESS to materially comply with any term or provision of this Agreement;

9.2.1.3 Failure by the BUSINESS to submit any documents required by this Agreement; or

9.2.1.4 The BUSINESS's submittal of incorrect or incomplete documents.

9.2.2 The Department may at any time suspend the BUSINESS's authority to obligate funds, withhold payments, or both.

9.2.3 The actions described in paragraphs 9.2.1 and 9.2.2 above may be applied to all or any part of the activities funded by this Agreement.

9.2.4 The Department will notify the BUSINESS in writing of any action taken pursuant to this Article, by certified mail, return receipt requested, or by in-person delivery with proof of delivery. The notification will include the reason(s) for such action, any condition relating to the action taken, and the necessary corrective action(s).

9.3 Termination:

9.3.1 Termination Because of Lack of Funds: In the event the CITY does not receive funds to finance this Agreement from its funding source, or in the event that the CITY's funding source de-obligates the funds allocated to fund this Agreement, the Department may terminate this Agreement upon not less than twenty-four (24) hours prior notice in writing to the BUSINESS. Said notice shall be delivered by certified mail, return receipt requested, or by in-person delivery with proof of delivery. In the event that the CITY's funding source reduces the CITY's entitlement under the CDBG Program, the CITY shall determine, in its sole and absolute discretion, the availability of funds for the BUSINESS pursuant to this Agreement.

9.3.2 Termination for Breach: The Department may terminate this Agreement, in whole or in part, in the event the Department determines, in its sole and absolute discretion that the BUSINESS is not materially complying with any term or provision of this Agreement. The Department may terminate this Agreement, in whole or in part, in the event that the Department determines, in its sole and absolute discretion, that there exists an event of default under and pursuant to the terms of any other agreement or obligation of any kind or nature whatsoever of the BUSINESS to the CITY, direct or contingent, whether now or hereafter due, existing, created or arising.

9.3.3 Unless the BUSINESS's breach is waived by the Department in writing, the Department may, by written notice to the BUSINESS, terminate this Agreement upon not less than twenty-four (24) hours prior written notice. Said notice shall

be delivered by certified mail, return receipt requested, or by in-person delivery with proof of delivery. Waiver of breach of any provision of thie Agreement shall not be deemed to be a waiver of any other breach and shall not be construed to be a modification of the terms of this Agreement. The provisions hereof are not intended to be, and shall not be, construed to limit the Department's right to legal or equitable remedies.

ARTICLE X
Miscellaneous Provisions

10.1 Indemnification: The BUSINESS shall pay and save the CITY harmless from and against any and all claims, liabilities, losses, and causes of action which may arise out of the BUSINESS's activities related to the Work Program or otherwise under this Agreement, including all acts or omissions to act on the part of the BUSINESS and/or any persons acting for or on its behalf, and from and against the CITY, and from and against all costs, attorney's fees, expenses, and liabilities incurred by the CITY in the defense or investigation of any such claims or other matters.

10.2 Amendments: No amendments to this Agreement shall be binding unless in writing and signed by both parties hereto. Budget modifications must be approved by the Department in writing.

10.3 Ownership of Documents: All documents developed by the BUSINESS under this Agreement shall be delivered to the CITY upon completion of the activities required pursuant to this Agreement and shall become the property of the CITY, without restriction or limitation on their use if requested by the CITY. The BUSINESS agrees that all documents maintained and generated pursuant to this Agreement shall be subject to all provisions of any federal and state Public Records requirements.

10.4 Award of Agreement: The BUSINESS warrants that it has not employed or retained any person employed by the CITY to solicit or secure this Agreement and that it has not offered to pay, paid, or agreed to pay any person employed by the CITY and fee, commission, percentage, brokerage fee, or gift of any kind contingent upon or resulting from the award of this Agreement.

10.5 Non-Delegability: The obligations undertaken by the BUSINESS pursuant to this Agreement shall not be delegated or assigned to any other person or firm, in whole or in part, without the CITY's prior written consent which may be granted or withheld in the CITY's sole discretion.

10.6 Construction of Agreement: This Agreement shall be construed and enforced according to the laws of the State of Mississippi.

10.7 Conflict of Interest:

10.7.1 The BUSINESS covenants that no person under its employ who presently exercises any functions or responsibilities in connection with CDBG Program funded activities has any personal financial interest, direct or indirect, in this Agreement. The BUSINESS further covenants, that in the performance of this Agreement, no person having such a conflicting interest shall be employed. Any such interest on the part of the BUSINESS or its employees must be disclosed in writing to the CITY.

10.7.2 The BUSINESS is aware of the conflict of interest laws of the State of Mississippi and agrees that it shall comply in all respects with the terms of the same.

10.7.3 Procurement: The BUSINESS shall comply with the standards contained within 24 CFR Part 84.

10.7.4 In all other cases, the BUSINESS shall comply with the standards contained within 24 CFR 570.611.

10.8 No Obligation to Renew: Upon expiration of the term of this Agreement, the BUSINESS agrees and understands that the CITY has no obligation to renew this Agreement.

10.9 Entire Agreement: This instrument and its attachments constitute the only Agreement of the parties hereto relating to the CDBG Funds and sets forth the rights, duties, and obligations of each of the parties hereto to the other as of its date. Any prior agreements, promises, negotiations, or representations not expressly set forth in this Agreement are of no force or effect.

10.10 General Conditions:

10.10.1 All notices or other communications which shall or may be given pursuant to this Agreement shall be in writing and shall be delivered by in-person delivery or by registered mail addressed to the other party at the address indicated herein or as the same may be changed from time to time, upon notice in writing. Such notice shall be deemed given on the day on which personally served, or, if by mail, on the fifth day after being posted or the date of actual receipt, whichever is earlier.

CITY of HATTIESBURG	BUSINESS
Andrew Ellard	**Becky Sims, Director**
Federal & State Programs	**Domestic Abuse Family Shelter**
200 Forrest Street	**912 North Main Street**
Hattiesburg, MS 39401	**Hattiesburg, MS 39401**

10.10.2 Title and paragraph headings are for convenient reference and are not a part of this Agreement.

10.10.3 In the event of conflict between the terms of this Agreement and any terms or conditions contained in any attached documents, the terms in this Agreement shall control.

10.10.4 No waiver of breach of any provision of this Agreement shall constitute a waiver of any subsequent breach of the same or any other provision hereof, and no waiver shall be effective unless made in writing.

10.10.5 Should any provision, paragraph, sentence, word or phrase contained in this Agreement be determined by a court of competent jurisdiction to be invalid, illegal or otherwise unenforceable under the laws of the State of Mississippi or the City of Hattiesburg, such provision, paragraph, sentence, word or phrase shall be deemed modified to the extent necessary in order to conform with such laws, or if not modifiable to conform with such laws, then same shall be deemed

severed, and in either event, the remaining terms and provisions of this Agreement shall remain unmodified and in full force and effect.

10.11 Independent Contractor: The BUSINESS and its employees and agents shall be deemed to be independent contractors and not agents or employees of the CITY, and shall not attain any rights or benefits under the Civil Service or Pension Ordinances of the CITY or any rights generally afforded classified or unclassified employees; further, they shall not be deemed entitled to the Mississippi Worker's Compensation benefits as employees of the CITY.

10.12 Successors and Assigns: This Agreement shall be binding upon the parties hereto, and their respective heirs, executors, legal representatives, successors, and assigns.

10.13 Business Certification: The BUSINESS certifies that it possesses the legal authority to enter into this Agreement pursuant to authority that has been duly adopted or passed as an official act of the BUSINESS's governing body, authorizing the execution of the Agreement, including all understandings and assurances contained herein, and directing and authorizing the person identified as the official representative of the BUSINESS to act in connection with this Agreement and to provide such information as may be required.

IN WITNESS THEREOF,

The City of Hattiesburg and the AWARDEE have caused their signatures to be hereunto affixed and duly attested:

City of Hattiesburg, Mississippi

By: _____
Johnny L. DuPree, Mayor

Date: _____

Attest: _____
Eddie Myers, City Clerk

Date: _____

Domestic Abuse Family Shelter

By: _____
Becky Sims, Director

Date: _____

Attest: _____

Date: _____

CITY OF HATTIESBURG

COMMUNITY DEVELOPEMNT BLOCK GRANT (CDBG)
COMMERCIAL REHAB ASSISTANCE AGREEMENT

Domestic Abuse Family Shelter

THIS contract (hereinafter the "AGREEMENT"), is made and entered into this **sixth (6th) day of November, 2012** by and between the CITY OF HATTIESBURG, MISSISSIPPI, (herein called the "CITY"), located at 200 Forrest Street, Hattiesburg, Mississippi 39401, represented by the **Hattiesburg Historic Downtown Association** as a CDBG Program Administrator for the City's Commercial Rehabilitation Program, and **Domestic Abuse Family Shelter**, a non-profit Corporation (hereinafter referred to as the "Business" or "Subrecipient"), located at **912 North Main Street** in Hattiesburg, Mississippi, and represented by Becky Sims for an amount not to exceed **$2,000.00** and which shall terminate on or before the **thirty-first (31st) day of March 2013**, unless amended by written instrument as provided for herein.

WHEREAS, the CITY has engaged the Hattiesburg Historic Downtown Association as a subrecipient – to act in the City's stead for the administration of Commercial Rehabilitation projects to assist the CITY in the improvement of facades, exteriors, and streetscapes along business corridors of low-income areas, and as such, references to "CITY" hereinafter refer to the Hattiesburg Historic Downtown Association.

WHEREAS, the CITY wishes to engage the BUSINESS to assist the CITY in utilizing such funds for: the improvement of facades, exteriors, and streetscapes along business corridors of low-income areas.

WHEREAS, such an activity meets a U.S. Department of Housing and Urban Development National Objective as it related to the CITY's Community Development Black Grant Program.

Now, therefore, in consideration of the mutual covenants and obligations herein set forth, the parties understand and agree as follows:

FUNDING SOURCE: Community Development Block Grant Funds

AMOUNT: not to exceed $2,000.00

TERM OF AGREEMENT: Effective November 6, 2012 through March 31, 2013.

SCOPE OF WORK: The OWNER will utilize CDBG Funds for materials and contracted labor required to repair and paint certain areas of the exterior, and to improve landscaping in areas visible from the street (all contingent on proper permitting if applicable).

The BUSINESS will utilize CDBG Funds according to Exhibit "B."

The BUSINESS must submit Quarterly Reports to the CITY, which will include:

(i) A detailed account of transactions in which CDBG Funds were utilized,

(ii) Receipts or other confirming documentation of those transactions, and

(iii) A brief narrative of the progress the BUSINESS is making in relation to the Scope of Work described herein.

Quarterly Reports are due December 20th and March 20th. The CITY may request additional information at a later date.

The CITY will schedule an onsite monitoring visit approximately half way through the term of the Agreement. The CITY may also conduct such an inspection at any given time as is necessary and appropriate throughout the term of the Agreement. The BUSINESS shall permit the Department and other persons duly authorized appropriate access for such inspection.

BUDGET (CDBG funds): The BUSINESS is approved to utilize CDBG funding according to the following budget, and it is expected that the BUSINESS will follow the budget as closely as administratively feasible. The amounts below may differ from the proposed budget in the BUSINESS's Application/Proposal.

Repair & Painting (materials and labor)	$ 2,000.00
Landscaping	$ 0.00
Miscellaneous (requires prior staff review and approval)	$ 0.00
TOTAL	**$ 2,000.00**

It is understood that there may be circumstances that lead to a budget adjustment. Cumulative adjustments to line items that are less than 10% may be made without prior approval, but should be noted on the next request for funds or periodic report. Cumulative adjustments of more than 10% require a formal amendment. Any line items listed with a $0.00 budget are included as line items into which the BUSINESS may adjust funds, if needed and with approval, within the allowed 10%.

SPECIAL CONDITIONS: Exhibit A, attached, includes the BUSINESS's Application for CDBG funding and proposal as originally submitted. The Exhibit is included strictly as a reference of the broader purpose of the agency and/or the program and its budget information, which may serve as evidence that the program will receive other financial resources. Significant portions of the proposed program may have been added to or taken away in drafting the final Agreement, contained herein.

ARTICLE I

Exhibits and Definitions

1.1 EXHIBITS: Attached hereto and forming a part of this Agreement are the following Exhibits:

EXHIBIT A: Original Assistance Application. References to "Work Program" may imply the attached original application, but the Scope of Work contained herein is the driving purpose and scope of the agreement.

EXHIBIT B: Budget: Complete Budget information is contained within the Scope of Work section.

1.2 DEFINITIONS: As used herein the following terms shall mean:

Act or 24 CFR 570: Title I of the Housing and Community Development Act of 1974, as amended

Agreement Records: Any and all books, records, documents, information, data, papers, letters, materials, and computerized or electronic storage data and media, whether written, printed, computerized, electronic or electrical, however collected or preserved which is or was produced, developed, maintained, completed, received or compiled by or at the direction of the BUSINESS or any subcontractor in carrying out the duties and obligations required by the terms of this Agreement, including, but not limited to, financial books and records, ledgers, drawings, maps, pamphlets, designs, electronic tapes, computer drives and diskettes or surveys.

CDBG Program: Community Development Block Grant Program

CDBG Requirements: The requirements contained in 24 CFR Part 570, and related and triggered Federal requirements

Department: The City of Hattiesburg Department of Federal & State Programs

Federal Award: Any federal funds received by the SUBRECIPIENT from any source during the period of time in which the SUBRECIPIENT is performing the obligations set forth in this Agreement.

Low- and Moderate-Income Person: A member of a low- or moderate-income household whose income is within specific income levels set forth by U.S. HUD for the area

U.S. HUD or HUD: The United States Department of Housing and Urban Development

ARTICLE II

Basic Requirements

The following documents must be approved by the CITY and must be on file with the Department prior to the CITY's execution of this Agreement:

2.1 The Business Plan and Proposal (hereinafter referred to as "Work Program") submitted by the BUSINESS to the CITY which shall become attached hereto as Exhibit "A" to this Agreement and shall include the following:

2.1.1 The Work Program shall detail the activities to be carried out by the BUSINESS. It should specifically describe the activities to be carried out as a result of the expenditure of CDBG funds. Where appropriate it should list measurable objectives, define the who, what, where and when of the project, and in general detail how these activities will ensure that the intended beneficiaries will be served.

2.1.2 The schedule of activities and measurable objectives play an essential role in the grant management system. The schedule should provide projected milestones and deadlines for the accomplishment of tasks in carrying out the Work Program. These projected milestones and deadlines are a basis for measuring actual progress during the term of this Agreement. These items shall be in sufficient detail to provide a sound basis for the CITY to effectively monitor performance by the BUSINESS under this Agreement.

2.2 The Compensation and Budget Summary attached hereto as Exhibit "B", which shall include completion of the BUSINESS's Budget.

2.3 All other documentation reasonably required by the CITY.

ARTICLE III
Terms and Procedures

3.1 City Authorization: For the purpose of this Agreement, the Department will act on behalf of the CITY in the fiscal control, programmatic monitoring and modification of this Agreement, except as otherwise provided by in this Agreement.

3.2 Effective Date and Term: The effective date of this Agreement shall be October 16, 2012 through March 31, 2013. This is the timeframe in which the BUSINESS has to draw and utilize the funds made available as a part of this agreement. This is also the timeframe in which the BUSINESS will be required to provide all evidence and documentation that the agreement was successfully fulfilled and that funds were expended for eligible uses.

3.2.1 The BUSINESS's obligations related to this Agreement extend beyond the basic effective dates, as the BUSINESS is required to retain records for a period of five (5) years. Record retention requirements are generally five (5) years from the closeout of the agreement, but may extend further as a result of any audit or finding related to the use of funds after the effective dates have expired.

3.3 Obligations of the Business: The BUSINESS shall carry out the services and activities as prescribed in its Work Program, which is attached and incorporated herein and made a part of this Agreement, in a manner that is lawful, and satisfactory to the CITY, and

in accordance with the written policies, procedures, and requirements as prescribed in this Agreement, and set forth by HUD and the CITY.

3.4 Level of Service: Should start-up time for the Work Program be required or in the event of the occurrence of any delays in the activities hereunder, the BUSINESS shall immediately notify the Department in writing, giving all pertinent details and indicating when the Work Program shall begin and/or continue. It is understood and agreed that the BUSINESS shall maintain the level of activities and expenditures in existence prior to the execution of this Agreement. Any activities funded through or as a result of this Agreement shall not result in the displacement of employed workers, impair existing agreements for services or activities, or result in the substitution of funds allocated under this Agreement for other funds in connection with work which would have been performed in the absence of this Agreement.

ARTICLE IV
CDBG Funding and Disbursement Requirements

4.1 Compensation: The amount of compensation payable by the CITY to the BUSINESS shall be based on the rates, schedules and conditions described in Exhibit "B" attached hereto, which by this reference is incorporated into this Agreement.

4.2 Insurance: Intentionally deleted.

4.3 Financial Accountability: The CITY reserves the right to audit the records of the BUSINESS at any time during the performance of this Agreement and for a period of five (5) years after its expiration/termination. The BUSINESS agrees to provide all financial and other applicable records and documentation of service to the CITY. Any payment made shall be subject to reduction for amounts included in the related invoice, which are found by the CITY, on the basis of such audit and at its sole discretion, not to constitute reasonable and necessary expenditures. Any payment made to the BUSINESS is subject to reduction for overpayments on previously submitted invoices.

4.4 Recapture of Funds: The CITY reserves the right to recapture funds in the event that the BUSINESS shall fail: (i) to comply with the terms of this Agreement, or (ii) to accept conditions imposed by the CITY at the discretion of the federal, state and local agencies.

4.5 Contingency Clause: Funding pursuant to this Agreement is contingent on the availability of funds and continued authorization for CDBG Program activities, and is also subject to amendment or termination due to lack of funds or authorization, reduction of funds, and/or changes in regulations.

Article V
Audit

5.0 Audit: Intentionally deleted.

Article VI

Records and Reports

6.1 The BUSINESS shall establish and maintain sufficient records to enable the CITY to determine whether the BUSINESS has met the requirements of the CDBG Program. At a minimum, the following records shall be maintained by the BUSINESS:

6.1.1 Records providing a full description of each activity assisted (or being assisted) with CDBG Funds, including its location (if the activity has a geographical focus), the amount of CDBG Funds budgeted, obligated and expended for the activity, and the specific provision in 24 CFR Subpart C of the CDBG Program regulations under which the activity is eligible.

6.1.2 Records demonstrating that each activity undertaken meets one of the criteria set forth in 24 CFR 570.208 of the CDBG Program regulations. Where information on income by family size is required, the BUSINESS may substitute evidence establishing that the person assisted qualified under another program having income qualification criteria at least as restrictive as that used in the definition of "low- and moderate-income person" and "low- and moderate-income household" as set forth in 24 CFR 570.3; or, the BUSINESS may substitute a copy of a verifiable certification from the assisted person that his or her family/household income does not exceed the applicable income limit established in accordance with 24 CFR 570.3; or, the BUSINESS may substitute a notice that the assisted person is a referral from any governmental agency that determines persons to be "low- and moderate-income persons" based on HUD's criteria and agrees to maintain documentation supporting those determinations. Such records shall include the following information:

(i) For each activity determined to benefit low- and moderate-income persons, the income limits applied and the point in time when the benefit was determined.

6.1.3 Equal Opportunity Records containing:

(i) Data on the extent to which each racial and ethnic group and single-headed households (by gender of household head) have applied for, participated in, or benefited from, any program or activity funded in whole or in part with CDBG Funds. Such information shall be used only as a basis for further investigation relating to compliance with any requirement to attain or maintain any particular statistical measure by race, ethnicity, or gender in covered programs.

(ii) Documentation of actions undertaken to meet the requirements of 24 CFR 570.607(b) which implements Section 3 of the Housing and Urban Development Act of 1968, as amended (12 U.S.C. 1701U) relative to the hiring and training of low- and moderate-income persons and the use of local businesses.

6.1.4 Financial records, in accordance with the applicable requirements listed in 24 CFR 570.502.

6.1.5 Records required to be maintained in accordance with other applicable laws and regulations set forth in Subpart K of 24 CFR.

6.2 <u>Retention and Accessibility of Records</u>

6.2.1 The Department shall have the authority to review the BUSINESS's records, including Project and programmatic records and books of account, for a period of five (5) years from the expiration/termination of this Agreement (the "Retention Period"). All books of account and supporting documentation shall be kept by the BUSINESS at least until the expiration of the Retention Period. The BUSINESS shall maintain records sufficient to meet the requirements of 24 CFR 570. All records and reports required herein shall be retained and made accessible as provided hereunder. The BUSINESS further agrees to abide by federal and state laws pertaining to public records.

6.2.2 The BUSINESS shall include in all the Department approved subcontracts used to engage subcontractors to carry out any eligible substantive project or programmatic activities, as such activities are described in this Agreement and defined by the Department, each record-keeping and audit requirements detailed in this Agreement. The Department shall, in its sole discretion, determine when services are eligible substantive project and/or programmatic activities and subject to the audit and record-keeping requirements described in this Agreement.

6.2.3 If the CITY or the BUSINESS has received or given notice of any kind indicating and threatened or pending litigation, claim or audit arising out of the activities pursuant to the project, the activities and/or the Work Program or the terms of this Agreement, the Retention Period shall be extended until such time as the threatened or pending litigation, claim or audit is, in the sole and absolute discretion of the Department fully, completely and finally resolved.

6.2.4 The BUSINESS shall notify the Department in writing both during the pendency of this Agreement and after its expiration/termination as part of the final closeout procedure, of the address where all Agreement Records will be retained.

6.2.5 The BUSINESS shall obtain the prior written consent of the Department to the disposal of any Agreement Records within one (1) year after the expiration of the Retention Period.

6.3 Provision of Records

6.3.1 At any time, upon request by the Department, the BUSINESS shall provide all Agreement Records to the Department. The requested Agreement Records shall become the property of the Department without restriction, reservation, or limitation on their use. The Department shall have unlimited rights to all books, articles, or other copyrightable materials developed in the performance of this Agreement. These rights include the right of royalty-free, nonexclusive, and irrevocable license to reproduce, publish, or otherwise use, and to authorize others to use the Work Program for public purposes.

6.3.2 If the BUSINESS receives funds from, or is under regulatory control of other governmental agencies, and those agencies issue monitoring reports, regulatory examinations, or other similar reports, the BUSINESS shall provide a copy of each such report and any follow-up communications and reports to the Department immediately upon such issuance, unless such disclosure would be prohibited by any such issuing agency.

6.4 Monitoring: The BUSINESS shall permit the Department and other persons duly authorized by the Department to inspect all Agreement Records, facilities, goods, and activities of the BUSINESS which are in any way connected to the activities undertaken pursuant to the terms of this Agreement, and/or interview any clients, employees, subcontractors or assignees of the BUSINESS. Following such inspection or interviews, the Department will deliver to the BUSINESS a report of its findings. The BUSINESS will rectify all deficiencies cited by the Department within the specified period of time set forth in the report or provide the Department with a reasonable justification for not correcting the same. The Department will determine in its sole and absolute discretion whether or not the BUSINESS's justification is acceptable.

At the request of the CITY, the BUSINESS shall transmit to the CITY written statements of the BUSINES's official policies on specified issues relating to the BUSINESS's activities. The CITY will carry out monitoring and evaluation activities, including visits and observations by CITY staff; the BUSINESS shall ensure the cooperation of its employees and its Board members in such efforts. Any inconsistent, incomplete, or inadequate information either received by the CITY, or obtained through monitoring and evaluation by the CITY, shall constitute cause for the CITY to terminate this Agreement.

6.5 Related Parties: The BUSINESS shall report to the Department the name, purpose for and any and all other relevant information in connection with any related-party transaction. The term "related-party transaction" includes, but is not limited to, a for-profit or nonprofit subsidiary or affiliate organization, an organization with an overlapping Board of Directors and an organization for which the BUSINESS is responsible for appointing memberships. The BUSINESS shall report this information to the Department upon forming the relationship, or if already formed, shall report such relationship prior to or simultaneously with the execution of this Agreement. Any supplemental information shall be promptly reported to the Department.

ARTICLE VII
Other CDBG Program Requirements

7.1 The BUSINESS shall maintain current documentation that its activities are CDBG eligible in accordance with 24 CFR Part 570.201(o).

7.2 The BUSINESS shall ensure and maintain documentation that conclusively demonstrates that each activity assisted in whole or in part with CDBG Funds is an activity which provides benefit to low- and moderate-income persons.

7.3 The BUSINESS shall comply with all applicable provisions of 24 CFR Part 570 and shall carry out each activity in compliance with all applicable federal laws and regulations described therein.

7.4 The BUSINESS shall cooperate with the Department in informing the appropriate citizen participation structures, including the appropriate area committees, of the activities of the BUSINESS in adhering to the provisions of this Agreement. Representatives of the BUSINESS shall attend meetings of the appropriate committees

and citizen participation structures upon the request of the citizen participation officers or the Department.

7.5 The BUSINESS shall, to the greatest extent possible, give low- and moderate-income residents of the service area opportunities for training and employment.

7.6 The BUSINESS shall use the funds to provide general support to owner(s) of microenterprises or persons developing microenterprises eligible under 570.208(a)(2)(iii). No other activities will be funded under this Agreement, unless Work Program is amended in writing by mutual agreement.

7.7 The BUSINESS shall carry out its Work Program in compliance with all Federal laws and regulations, described in Subpart K of the CDBG Program regulation (24 CFR 570.600-612), which by this reference, is incorporated into and made a part of this Agreement.

7.8 The BUSINESS shall not assume the CITY's environmental responsibilities described in 24 CFR 570.604, of the CDBG Program regulations, and the CITY's responsibility for initiating the review process under Executive Order 12372.

7.9 Non-Discrimination: The BUSINESS shall not discriminate on the basis of race, color, national origin, sex, religion, age, marital or family status or handicap in connection with the activities and/or the Work Program or its performance under this Agreement. Furthermore, the BUSINESS agrees that no otherwise qualified individual shall, solely by reason of his/her race, sex, color, creed, national origin, age, marital status or handicap, be excluded from the participation in, be denied benefits of, or be subjected to discrimination under any program or activity receiving federal financial assistance.

7.10 The BUSINESS shall carry out its Work Program in compliance with all federal laws and regulations, including those described in Subpart K of the CDBG Program regulations (24 CFR 570.600-612).

7.11 The BUSINESS and its subcontractors shall comply with the Davis-Bacon Act, the Lead-Based Paint Poisoning Prevention Act, and any other applicable laws, ordinances and regulations.

7.12 The BUSINESS shall abide by the Federal Labor Standards provisions of U.S. HUD Form 4010, by reference incorporated herein as part of this Agreement.

7.13 Uniform Administrative Requirements: The BUSINESS shall comply with the requirements and standards of OMB Circular No. A-122, "Cost Principles for Non-Profit Organizations" and with the applicable requirements of 24 CFR Part 84 (the revised OMB Circular No. A-110).

7.14 Religious Organizations/Constitutional Prohibition: If the BUSINESS is or was created by a religious organization, the BUSINESS agrees that all CDBG Funds disbursed under this Agreement shall be subject to the conditions, restrictions, and limitations of 24 CFR Part 570.200(j). In accordance with the First Amendment of the United States Constitution, particularly regarding the relationship between church and State, as a general rule, CDBG assistance may not be used for religious activities or provided to entities with any limitation, whether directed or implied, on the beneficiaries of its activities on the basis of religion or participation in a religious activity, as provided in 24 CFR Part 570.200(j). The BUSINESS shall comply with those requirements and prohibitions when entering into subcontracts.

7.15 Reversion of Assets: Upon expiration/termination of this Agreement, the BUSINESS must transfer to the CITY any CDBG Funds on hand at the time of

expiration/termination and any accounts receivable attributable to the use of CDBG Funds.

7.16 Enforcement of this Agreement: Any violation of this Agreement that remains uncured thirty (30) days after the BUSINESS's receipt of notice from the CITY (by certified or registered mail) of such violation may, at the option of the CITY, be addressed by an action for damages or equitable relief, or any other remedy provided at law or in equity. In addition to the remedies of the CITY set forth herein, if the BUSINESS materially fails to comply with the terms of this Agreement, the CITY may suspend or terminate this Agreement in accordance with 24 CFR Part 85.43, as set forth more fully below in Article IX of this Agreement.

ARTICLE IX
Remedies, Suspension, Termination

9.1 Remedies for Noncompliance: The CITY retains the right to terminate this Agreement at any time prior to the completion of the services required pursuant to this Agreement without penalty to the CITY. In that event, notice of termination of this Agreement shall be in writing to the BUSINESS, who shall be paid for those services performed prior to the date of its receipt to the notice of termination. In no case, however, shall the CITY pay the BUSINESS an amount in excess of the total sum provided by this Agreement.

It is hereby understood by and between the CITY and the BUSINESS that any payment made in accordance with this Agreement to the BUSINESS shall be made only if the BUSINESS is not in default under the terms of this Agreement. If the BUSINESS is in default, the CITY shall not be obligated and shall not pay to the BUSINESS any sum whatsoever.

If the BUSINESS materially fails to comply with any term of this Agreement, the CITY may take one or more of the following courses of action:

9.1.1 Temporarily withhold cash payments pending correction of the deficiency by the BUSINESS, or such more severe enforcement action as the CITY determines is necessary or appropriate.

9.1.2 Disallow (that is, deny both the use of funds and matching credit) for all or part of the cost of the activity or action not in compliance.

9.1.3 Wholly or partly suspend or terminate the current CDBG Funds awarded to the BUSINESS.

9.1.4 Withhold further CDBG grants and/or loans for the BUSINESS.

9.1.5 Take all such other remedies that may be legally available.

Notwithstanding any other provision of this Agreement, if the BUSINESS materially fails to comply with any term of this Agreement, the BUSINESS, at the sole discretion of the CITY, shall pay to the CITY an amount equal to the current market value of any real property, under the BUSINESS's control, acquired or improved in whole or in part with CDBG Funds (including CDBG Funds provided to the BUSINESS in the form of a loan and/or grant), less any portion of the value attributable to expenditures of non-

CDBG Funds for the acquisition of, or improvement to, the property. The payment is Program Income to the CITY.

9.2 Suspension:

9.2.1 The Department may, for reasonable cause temporarily suspend the BUSINESS's operations and authority to obligate funds under this Agreement or withhold payments to the BUSINESS pending necessary corrective action by the BUSINESS, or both. Reasonable cause shall be determined by the Department in its sole and absolute discretion, and may include:

9.2.1.1 Ineffective or improper use of the CDBG Funds by the BUSINESS;

9.2.1.2 Failure by the BUSINESS to materially comply with any term or provision of this Agreement;

9.2.1.3 Failure by the BUSINESS to submit any documents required by this Agreement; or

9.2.1.4 The BUSINESS's submittal of incorrect or incomplete documents.

9.2.2 The Department may at any time suspend the BUSINESS's authority to obligate funds, withhold payments, or both.

9.2.3 The actions described in paragraphs 9.2.1 and 9.2.2 above may be applied to all or any part of the activities funded by this Agreement.

9.2.4 The Department will notify the BUSINESS in writing of any action taken pursuant to this Article, by certified mail, return receipt requested, or by in-person delivery with proof of delivery. The notification will include the reason(s) for such action, any condition relating to the action taken, and the necessary corrective action(s).

9.3 Termination:

9.3.1 Termination Because of Lack of Funds: In the event the CITY does not receive funds to finance this Agreement from its funding source, or in the event that the CITY's funding source de-obligates the funds allocated to fund this Agreement, the Department may terminate this Agreement upon not less than twenty-four (24) hours prior notice in writing to the BUSINESS. Said notice shall be delivered by certified mail, return receipt requested, or by in-person delivery with proof of delivery. In the event that the CITY's funding source reduces the CITY's entitlement under the CDBG Program, the CITY shall determine, in its sole and absolute discretion, the availability of funds for the BUSINESS pursuant to this Agreement.

9.3.2 Termination for Breach: The Department may terminate this Agreement, in whole or in part, in the event the Department determines, in its sole and absolute discretion that the BUSINESS is not materially complying with any term or provision of this Agreement. The Department may terminate this Agreement, in whole or in part, in the event that the Department determines, in its sole and absolute discretion, that there exists an event of default under and pursuant to the terms of any other agreement or obligation of any kind or nature whatsoever of the BUSINESS to the CITY, direct or contingent, whether now or hereafter due, existing, created or arising.

9.3.3 Unless the BUSINESS's breach is waived by the Department in writing, the Department may, by written notice to the BUSINESS, terminate this Agreement upon not less than twenty-four (24) hours prior written notice. Said notice shall

be delivered by certified mail, return receipt requested, or by in-person delivery with proof of delivery. Waiver of breach of any provision of thie Agreement shall not be deemed to be a waiver of any other breach and shall not be construed to be a modification of the terms of this Agreement. The provisions hereof are not intended to be, and shall not be, construed to limit the Department's right to legal or equitable remedies.

ARTICLE X
Miscellaneous Provisions

10.1 Indemnification: The BUSINESS shall pay and save the CITY harmless from and against any and all claims, liabilities, losses, and causes of action which may arise out of the BUSINESS's activities related to the Work Program or otherwise under this Agreement, including all acts or omissions to act on the part of the BUSINESS and/or any persons acting for or on its behalf, and from and against the CITY, and from and against all costs, attorney's fees, expenses, and liabilities incurred by the CITY in the defense or investigation of any such claims or other matters.

10.2 Amendments: No amendments to this Agreement shall be binding unless in writing and signed by both parties hereto. Budget modifications must be approved by the Department in writing.

10.3 Ownership of Documents: All documents developed by the BUSINESS under this Agreement shall be delivered to the CITY upon completion of the activities required pursuant to this Agreement and shall become the property of the CITY, without restriction or limitation on their use if requested by the CITY. The BUSINESS agrees that all documents maintained and generated pursuant to this Agreement shall be subject to all provisions of any federal and state Public Records requirements.

10.4 Award of Agreement: The BUSINESS warrants that it has not employed or retained any person employed by the CITY to solicit or secure this Agreement and that it has not offered to pay, paid, or agreed to pay any person employed by the CITY and fee, commission, percentage, brokerage fee, or gift of any kind contingent upon or resulting from the award of this Agreement.

10.5 Non-Delegability: The obligations undertaken by the BUSINESS pursuant to this Agreement shall not be delegated or assigned to any other person or firm, in whole or in part, without the CITY's prior written consent which may be granted or withheld in the CITY's sole discretion.

10.6 Construction of Agreement: This Agreement shall be construed and enforced according to the laws of the State of Mississippi.

10.7 Conflict of Interest:

10.7.1 The BUSINESS covenants that no person under its employ who presently exercises any functions or responsibilities in connection with CDBG Program funded activities has any personal financial interest, direct or indirect, in this Agreement. The BUSINESS further covenants, that in the performance of this Agreement, no person having such a conflicting interest shall be employed. Any such interest on the part of the BUSINESS or its employees must be disclosed in writing to the CITY.

10.7.2 The BUSINESS is aware of the conflict of interest laws of the State of Mississippi and agrees that it shall comply in all respects with the terms of the same.

10.7.3 Procurement: The BUSINESS shall comply with the standards contained within 24 CFR Part 84.

10.7.4 In all other cases, the BUSINESS shall comply with the standards contained within 24 CFR 570.611.

10.8 No Obligation to Renew: Upon expiration of the term of this Agreement, the BUSINESS agrees and understands that the CITY has no obligation to renew this Agreement.

10.9 Entire Agreement: This instrument and its attachments constitute the only Agreement of the parties hereto relating to the CDBG Funds and sets forth the rights, duties, and obligations of each of the parties hereto to the other as of its date. Any prior agreements, promises, negotiations, or representations not expressly set forth in this Agreement are of no force or effect.

10.10 General Conditions:

10.10.1 All notices or other communications which shall or may be given pursuant to this Agreement shall be in writing and shall be delivered by in-person delivery or by registered mail addressed to the other party at the address indicated herein or as the same may be changed from time to time, upon notice in writing. Such notice shall be deemed given on the day on which personally served, or, if by mail, on the fifth day after being posted or the date of actual receipt, whichever is earlier.

CITY of HATTIESBURG	BUSINESS
Andrew Ellard	**Becky Sims, Director**
Federal & State Programs	**Domestic Abuse Family Shelter**
200 Forrest Street	**912 North Main Street**
Hattiesburg, MS 39401	**Hattiesburg, MS 39401**

10.10.2 Title and paragraph headings are for convenient reference and are not a part of this Agreement.

10.10.3 In the event of conflict between the terms of this Agreement and any terms or conditions contained in any attached documents, the terms in this Agreement shall control.

10.10.4 No waiver of breach of any provision of this Agreement shall constitute a waiver of any subsequent breach of the same or any other provision hereof, and no waiver shall be effective unless made in writing.

10.10.5 Should any provision, paragraph, sentence, word or phrase contained in this Agreement be determined by a court of competent jurisdiction to be invalid, illegal or otherwise unenforceable under the laws of the State of Mississippi or the City of Hattiesburg, such provision, paragraph, sentence, word or phrase shall be deemed modified to the extent necessary in order to conform with such laws, or if not modifiable to conform with such laws, then same shall be deemed

severed, and in either event, the remaining terms and provisions of this Agreement shall remain unmodified and in full force and effect.

10.11 Independent Contractor: The BUSINESS and its employees and agents shall be deemed to be independent contractors and not agents or employees of the CITY, and shall not attain any rights or benefits under the Civil Service or Pension Ordinances of the CITY or any rights generally afforded classified or unclassified employees; further, they shall not be deemed entitled to the Mississippi Worker's Compensation benefits as employees of the CITY.

10.12 Successors and Assigns: This Agreement shall be binding upon the parties hereto, and their respective heirs, executors, legal representatives, successors, and assigns.

10.13 Business Certification: The BUSINESS certifies that it possesses the legal authority to enter into this Agreement pursuant to authority that has been duly adopted or passed as an official act of the BUSINESS's governing body, authorizing the execution of the Agreement, including all understandings and assurances contained herein, and directing and authorizing the person identified as the official representative of the BUSINESS to act in connection with this Agreement and to provide such information as may be required.

IN WITNESS THEREOF,

The City of Hattiesburg and the AWARDEE have caused their signatures to be hereunto affixed and duly attested:

City of Hattiesburg, Mississippi

By: _____
Johnny L. DuPree, Mayor

Date: 11-6-12

Attest: _____
Eddie Myers, City Clerk

Date: 11-6-12

Domestic Abuse Family Shelter

By: _____
Becky Sims, Director

Date: _____

Attest: _____

Date: _____

Landscaping North Main National Historic

Façade Improvement Grant Application

II. APPLICANT INFORMATION

1. Applicant's/Owner's Name: Domestic Abuse Family Shelter, Inc.
2. Business Name: Same as above
3. Applicant's Phone #: 601-428-1707 Fax #: 601-428-3180
4. Street Address: 912 North Main Street, Hattiesburg, MS 39401
5. Mailing Address: P. O. Box 273, Laurel, MS 39441-0273
6. E-Mail Address: dafss@bellsouth.net
7. Business/Tax Identification #: 64-0681477
8. Type of Business: Temporary emergency shelter
   (Professional, office, restaurant, etc.)
9. Owner's Name: (if different from applicant) same as above
10. Applicant Status: Choose one
    ( ) Property Owner ( ) Business Owner/Tenant (xx) Both

III. PROJECT INFORMATION

1. Current Building Use: temporary emergency shelter

   Proposed Use if Changing: N/A
2. Date of Original Construction: 1900 Number of Stories: One
   The original construction date may be obtained from the Tax Department 601-545-~~4525~~. 4553
3. Construction Type:
   (xx) Wood Frame ( ) Brick ( ) Block/Stone ( ) Masonry ( ) Other
   Include Photos

Please provide a short narrative description of the proposed project:

Painters will remove lead paint properly, scraping, pressure washing, caulking, painting, etc. (see proposal). Volunteers will pull up the front shrubs to protect them from lead paint and put them back. Exterior paint will be white and rotten boards will be replaced. This only covers the front of the house facing Main Street. The volunteers will paint the inner front porch white (it is now brown), put up new screen, repair floor and ceiling.
Board of Directors has committed money from DAFS' budget to cover what is not provided by CDBG funds.

Are you open to suggestions or design assistance? ( ) Yes (xx) No
How can we assist you? Please explain:

Estimated Cost of Improvements:

a). Amount of CDBG Funds Requested $ 2,000.00

b). Total Cost of Project Improvements: $ 6,980.74

Please provide a Project Schedule:

a). Estimated construction start date: August 1, 2012

b). Estimated completion date: October 31, 2012

Do you have volunteer participation? (x) Yes ( ) No
Source: Seventh Day Adventist Church members

Do you have additional resources/funding for your project if the CDBG Grant does not cover all the expense of your project? (x) Yes ( ) No

City of Hattiesburg, MS

200 Forrest St.
P.O. Box 1898
Hattiesburg, MS 39401

Master

File Number: 2012-1290

File ID:	2012-1290	**Type:**	Regular Agenda Item	**Status:**	Approved
Version:	1	**Reference:**		**In Control:**	City Council
				File Created:	10/29/2012
Brief Title:	2013-2017 Consolidated Plan & 2013 Action Plan Submission			**Final Action:**	11/06/2012
				Minute Book Number:	MB2012-1/385

Title:

Approve and authorize the Mayor to submit the City of Hattiesburg's 2013-2017 Consolidated Plan and component 2013 Action Plan to the Department of Housing and Urban Development in connection with the implementation of the 2013-2017 CDBG and HOME Entitlement Programs.{Entitlements}

Notes:

Sponsors:		**Enactment Date:**	
Attachments:	Con Plan - Final - Text only, Maps - Median Income and Minority Concentration by Census Tract, ConsultationsandPublicCommentsFinal, Appendix A - Public Announcements, SF-424	**Enactment Number:**	
Contact:		**Meeting Date:**	11/06/2012
Drafter:	Andrew Ellard	**Effective Date:**	

History of Legislative File

Version:	Acting Body:	Date:	Action:	Sent To:	Due Date:	Return Date:	Result:
1	City Council	11/06/2012	Approve and Authorize				Pass

Action Text: A MOTION was made by Council Member Delgado and seconded by Council Member Naylor to Approve and authorize the Mayor to submit the City of Hattiesburg's 2013-2017 Consolidated Plan and component 2013 Action Plan to the Department of Housing and Urban Development in connection with the implementation of the 2013-2017 CDBG and HOME Entitlement Programs.{Entitlements}

There being no discussion, the Motion received the affirmative vote of the Council as follows:

Yeas: 5 - Bradley, Delgado, Carroll, Ware and Naylor

Nays: 0

Yea:	5	President Bradley Council Member Delgado Council Member Carroll Vice President Ware Council Member Naylor
ΓEL-No Vote:	0	

Text of Legislative File 2012-1290

Title

Approve and authorize the Mayor to submit the City of Hattiesburg's 2013-2017 Consolidated Plan and component 2013 Action Plan to the Department of Housing and Urban Development in connection with the implementation of the 2013-2017 CDBG and HOME Entitlement Programs.{Entitlements}

Summary

2013-2017 Consolidated Plan & 2013 Action Plan Submission

Budget Information

Expenditure Type

Purchasing Item

Publication Information

2013 – 2017 CONSOLIDATED PLAN
January 1, 2013 – December 31, 2017

2013 ANNUAL ACTION PLAN
January 1, 2013 – December 31, 2013

City of Hattiesburg, Mississippi
Department of Federal and State Programs
Community Development Division

Federal Program Year 2013, 2014, 2015, 2016, & 2017
City of Hattiesburg Fiscal Year 2013 (partial), 2014, 2015, 2016, 2017, & 2018 (partial)

DUNS - 07 944 8130

Executive Summary

ES-05 Executive Summary

1. Introduction

The City of Hattiesburg's 2013-2017 Consolidated Plan was developed through a coordinated community process to identify housing, homelessness, supportive service, and non-housing community needs in the City. The Plan provides a basis and strategy for the use of federal funds granted to the City by the U.S. Department of Housing & Urban Development (HUD) under the Community Development Block Grant (CDBG) and Home Investment Partnership (HOME). The accompanying one-year Action Plan serves as the City's application for its annual entitlement allocation from HUD under these programs for 2013.

2. Summary of the objectives and outcomes identified in the Plan Needs Assessment Overview

The primary objectives of the Plan for 2013-2017 are consistent with the primary objectives in the prior Consolidated Plan, which involve addressing a variety of housing concerns. Housing Rehabilitation, Emergency Repair, Acquisition/Rehabilitation, Down Payment Assistance, Affordable Housing and Demolition are some of the types of housing-related activities that are consistent with the prior plan. Over the Plan period, the City plans to address 30 Homeowner Rehabilitation projects, Rehabilitate 2 rental units for affordable housing, and create 4 new affordable housing units either for sale or rent. Plans also include the demolition of 50 vacant, dilapidated houses, and the assistance of 10 households through the Down Payment Assistance Program. The achievement of these objectives will rely in part on the City's Community Housing Development Organizations (CHDOs) and other partners in the field of housing.

Behind housing objectives, the next objective of greatest need is in the area of Homelessness and Special Needs Populations. Objectives within the Consolidated Plan that address these populations vary among several eligible types of activities. Public Service activities, Public Facility Improvement activities, and population-targeted housing activities can all benefit homeless individuals and families as well as households with special needs. Although the number and exact type of household that will benefits from these activities depends greatly on the RFP process that the City will administer (specifically in the area of Public Services and potentially Public Facilities), the City reasonably plans to serve in excess of 2,000 people.

The City's Plan also includes Infrastructure activities such as drainage, street improvements, sidewalks, and trails that would benefit low-income areas including more than 1,000 households. Commercial Rehabilitation such as the Facade Improvement Program and Economic Development activities such as the Microenterprise Program will continue to support businesses. Objectives include the facade

improvement of 5 commercial structures and Microenterprise Assistance awards to assist businesses in hopes of creating 10 jobs available to low/mod individuals.

3. Evaluation of past performance

Through the public participation process, consultation with various organizations, and the experience of the City's Community Development Division staff, it is apparent that housing concerns remain the greatest community development challenge in the City of Hattiesburg. Staff receives and responds to calls daily from residents with repair issues, requests for information on purchasing a home, and soliciting resources for specific housing needs. The City has continued to operate its Housing Rehabilitation program from a list in excess of 300 households, which dates back to 2007. Simply stated, there is abundantly more need in terms of housing than there are available resources. While traction has been made in recent years with the partnership and sharing of resources between some housing organizations, there is much more work to be done to address blighting conditions; emergency, health, and safety concerns; and basic deterioration of homes where owners cannot afford to make corrections.

In the arena of the homeless and special needs populations, the City has played an active but limited role in recent years. The City has awarded Public Service grants to non-profits serving these groups and has had representation in organizations such as the Pinebelt Coalition on Homelessness and Mississippi United to End Homelessness, and has facilitated groups such as the Housing Roundtable, which includes representation from groups such as the Institute for Disability Studies. Other than participation in organizational meetings, working as a referral agent, and promoting efforts of partner agencies, the City has only limitedly funded activities by organizations that serve these populations. Throughout the development process for the Consolidated Plan, it became abundantly clear that there is significant need in the City of Hattiesburg for supportive services for agencies working with homeless individuals and families, persons living with HIV/AIDS, disabled individuals, the mentally ill, and other special needs groups. It became clear that there is also a great need for emergency shelter, transitional housing, and permanent supportive housing for these groups as well. While the City's support in these areas has been more indirect in the past, the coming years will see the City target its financial support more directly to such organizations through activities like Public Services and Public Facility Improvements.

4. Summary of citizen participation process and consultation process

The Citizen Participation Process included two advertisements in the Hattiesburg American notifying the public of a schedule of upcoming public hearings and setting a public comment period on the topic of the Consolidated Plan. The City also mailed letters to known neighborhood representatives and faith-based organizations in order to garner additional interest in the upcoming public hearings. The City held one public hearing in each of the City's five (5) wards.

Recognizing the need for input from organizations that serve low-income areas and individuals, the City sent a letter to known non-profit organizations and held an Inter-Agency Meeting to solicit input. This meeting included participation from many of the organizations that would need to provide consultation

in the development of the Plan - the Hattiesburg Housing Authority and MS Regional Housing Authority No. 8, for instance. Following the meeting and at the close of the public comment period, the City began developing a draft of the Consolidated Plan, at which time, staff consulted organizations as needed in order to ensure appropriate consultations and data were included.

5. Summary of public comments

All consultations, summaries of public hearings, and written comments received are contained herein. Comments largely reinforced the approach to resource allocation that the City has instituted in prior years, with Housing Rehabilitation and Repairs topping the list of priorities. Services to, and housing for homeless populations, disabled residents, and persons living with HIV/AIDS were identified as a higher priority than in previous plans, which led to such projects and activities being identified more specifically throughout the plan. Other activities advocated by the public and by partner agencies include down payment assistance, demolition, public services, microenterprise assistance, commercial rehabilitation, public facility improvement, and infrastructure improvement.

6. Summary of comments or views not accepted and the reasons for not accepting them

All comments and views received were accepted and included in the preparation of this document. No comments were rejected for any reason.

7. Summary

The City of Hattiesburg recognizes its CDBG and HOME grants as an opportunity to do great things to improve quality of life for low- to moderate-income residents and as a result, for the City as a whole. The City values the citizen participation process, and appreciates the input that residents and organizations have supplied in guiding this document. Participation in this process by the residents of low-income areas, and the organizations that regularly serve low-income households is vital to ensuring that the funds are directed to areas and programs in which they can make the greatest impact.

The City believes that the strategies and objectives set forth in this Consolidated Plan are feasible and attainable (assuming that funding remains available), and they are in accordance with the needs and desires communicated by the public that these grants are intended to serve and organizations that provide such services.

The Process

PR-05 Lead & Responsible Agencies

1. Agency/entity responsible for preparing/administering the Consolidated Plan

The following are the agencies/entities responsible for preparing the Consolidated Plan and those responsible for administration of each grant program and funding source.

Agency Role	Name	Department/Agency
Lead Agency	HATTIESBURG	

Table 1 – Responsible Agencies

Narrative

The lead agency, which is the entity responsible for overseeing the development of the plan, is the City of Hattiesburg through its Department of Federal & State Programs, and more specifically, its Community Development Division. The City enjoys entitlement status under the U.S. Department of Housing & Urban Development's Community Development Block Grant (CDBG) and HOME Investment Partnerships (HOME) Programs. As such, the City receives an annual, formula driven allocation of funding from each program. In addition to overseeing the planning process for the use of these federal funding sources, the City also administers the programs either directly or through partnerships with capable subrecipients.

Consolidated Plan Public Contact Information

Questions or comments can be directed to:

Andrew Ellard, Department of Federal & State Programs

200 Forrest Street, First Floor (P.O. Box 1898)

Hattiesburg, MS 39403-1898

(601) 554-1006, AELLARD@HattiesburgMS.com

Additional contact and programmatic information can be found atwww.HattiesburgMS.com.

PR-10 Consultation

1. Introduction

The City's program staff identified and reached out to citizens, local government representatives, public housing authorities, non-profit developers, and various social service agencies to gather input for the Consolidated Plan. The simultaneous development of an Analysis of Impediments to Fair Housing Choice by the City's consultants included consultations with many of these same organizations as well as real estate industry professionals and lenders, which provided additional input that can be considered in the development of the Consolidated Plan - particularly as it relates to housing concerns.

Summary of the jurisdiction's activities to enhance coordination between public and assisted housing providers and private and governmental health, mental health and service agencies

The City continues to facilitate a group known as the Housing Roundtable to discuss a variety of housing and homelessness issues. Participants include the City's Urban Development and Federal Programs Departments, Mississippi Regional Housing Authority No. 8, the Hattiesburg Housing Authority, Hattiesburg Area Habitat for Humanity, R3SM (a non-profit housing organization), as well as the City's Community Development Housing Organizations (CHDOs). Participants also include the Salvation Army and Pine Grove Behavioral Health & Addiction Services, which both serve homeless persons; the AIDS Services Coalition, which serves the homeless as well as those living with AIDS; the University of Southern Mississippi's Institute for Disability Studies, which addresses housing issues statewide; and the Hattiesburg Board of Realtors.

Describe coordination with the Continuum of Care and efforts to address the needs of homeless persons (particularly chronically homeless individuals and families, families with children, veterans, and unaccompanied youth) and persons at risk of homelessness

The City works closely with the Continuum of Care operating in Hattiesburg and the surrounding areas. The Pinebelt Homeless Coalition is the lead agency for the implementation of HUD Continuum of Care programs. Generally, individuals requiring assistance are referred to this organization. Further, the City has provided funding to the AIDS Services Coalition and Pine Grove Behavioral Health & Addiction Services.

Describe consultation with the Continuum(s) of Care that serves the jurisdiction's area in determining how to allocate ESG funds, develop performance standards and evaluate outcomes, and develop funding, policies and procedures for the administration of HMIS

The City of Hattiesburg is a part of the 71-county "balance of state" Continuum of Care. The City works with the Continuum of Care (Mississippi United to End Homelessness), and a representative from the City regularly participates in their meetings. MUTEH and its members establish guidelines, policies, etc. for the Continuum of Care. The City does not enjoy entitlement status under ESG, and as the City does

not directly undertake any activities supporting homeless persons, the City does not access or input information into HMIS.

2. Agencies, groups, organizations and others who participated in the process and consultations

Agency/Group/Organization	Agency/Group/Organization Type	What section of the Plan was addressed by Consultation?
AIDS Services Coalition	Housing Services-Persons with HIV/AIDS Services-homeless Services-Education	Housing Need Assessment Homelessness Strategy Homeless Needs - Chronically homeless Homeless Needs - Families with children Non-Homeless Special Needs HOPWA Strategy
Mississippi State Department of Health	Housing Services-Children Services-Health Health Agency Child Welfare Agency Other government - State	Housing Need Assessment Lead-based Paint Strategy
Salvation Army	Services-homeless	Housing Need Assessment Public Housing Needs Homelessness Strategy Homeless Needs - Chronically homeless Homeless Needs - Families with children Anti-poverty Strategy
Southern MS Planning & Development District	Services-Education Services-Employment Planning organization	Economic Development
U. of Southern Miss. Institute for Disabilities Studies	Housing Services-Persons with Disabilities Services-Education	Housing Need Assessment Public Housing Needs

Agency/Group/Organization	Agency/Group/Organization Type	What section of the Plan was addressed by Consultation?
	Service-Fair Housing Other government - State	Non-Homeless Special Needs
Hattiesburg Housing Authority	Housing PHA Other government - Local	Housing Need Assessment Public Housing Needs Non-Homeless Special Needs
Hattiesburg Area Habitat for Humanity	Housing Services-Education Service-Fair Housing	Housing Need Assessment
Hattiesburg Council of Neighborhoods	Civic Leaders Area Neighborhood Associations Neighborhood Organization	Housing Need Assessment Infrastructure
Oseola McCarty Youth Development Center	Services-Children Services-Elderly Persons Services-Education Services-Employment	Housing Need Assessment Lead-based Paint Strategy Economic Development
Domestic Abuse Family Shelter, Inc.	Housing Services-Victims of Domestic Violence Services-homeless Services-Education Services-Employment	Housing Need Assessment Public Housing Needs Homeless Needs - Families with children Non-Homeless Special Needs
DuBard School for Language Disorders	Services-Children Services-Elderly Persons Services-Persons with Disabilities Services-Education Other government - State	Non-Homeless Special Needs
Off Campus Study Hall	Services-Children Services-Education	Public Services
Family Network Partnership	Services-Children Services-Elderly Persons Services-homeless Services-Education Services-Employment	Housing Need Assessment Public Housing Needs Homelessness Strategy

Agency/Group/Organization	Agency/Group/Organization Type	What section of the Plan was addressed by Consultation?
	Other government - State USM - School of Social Work	Economic Development
South Mississippi Children's Center	Housing Services-Children Services-Victims of Domestic Violence Services-homeless Child Welfare Agency	Housing Need Assessment Homelessness Strategy Economic Development
MS Regional Housing Authority No. 8	PHA	Housing Need Assessment
BREAKTHROUGH COMMUNITY SERVICES	Housing Services-Elderly Persons Services-Persons with Disabilities Service-Fair Housing	Housing Need Assessment
Forrest General Hospital (Pine Grove Behavioral Health & Addiction Services)	Housing Services-Persons with Disabilities Services-Persons with HIV/AIDS Services-homeless Services-Health Health Agency Publicly Funded Institution/System of Care	Housing Need Assessment Homelessness Strategy Homeless Needs - Chronically homeless Homelessness Needs - Veterans Anti-poverty Strategy

Table 2 – Agencies, groups, organizations who participated

Identify any Agency Types not consulted and provide rationale for not consulting

The process of developing the Consolidated Plan was intended to be as open and involving as possible among the public and servicing agencies. Were any organizations left out of the process, it was certainly not intentional. The City believes that a satisfactory effort was made in notifying the public and agencies from a wide range of types/missions and that ample input was provided by such organizations to create a complete Plan.

Other local/regional/state/federal planning efforts considered when preparing the Plan

Name of Plan	Lead Organization	How do the goals of your Strategic Plan overlap with the goals of each plan?
Continuum of Care	Mississippi United to End	MUTEH is in the process of establishing a 10-year plan to end homelessness, and the City is in contact with the

Name of Plan	Lead Organization	How do the goals of your Strategic Plan overlap with the goals of each plan?
	Homelessness	organization's chairperson, the more regional Pinebelt Coalition on Homelessness, and local organizations serving homeless persons and families.
Analysis of Impediments to Fair Housing Choice	City of Hattiesburg	The City will make an effort to address to the extent feasible, identified impediments - either directly or indirectly - as it develops the annual action plans to accompany the Consolidated Plan.

Table 3 – Other local / regional / federal planning efforts

Describe the means of cooperation and coordination among the state and any units of general local government in the metropolitan area in the implementation of its Consolidated Plan (91.220(l))

The City reached out to officials in the City of Petal, Forrest County, and Lamar County during the comment period for the Consolidated Plan, and one response was received from each of those governing bodies. Lamar County identified as shared priorities the need for infrastructure, the completion of West 4th Street Project, and the continued progress of the Western Beltway Project. The City of Petal identified wastewater treatment facilities as a shared concern as wastewater from Petal is sent to Hattiesburg for treatment. Forrest County identified lagoon upgrades needed at the City/County shared industrial park, remarked that the county's ongoing road and bridge work mutually benefit the City and County, and identified funding of inmates at the Forrest County regional Jail as a common problem that needs to be addressed.

Narrative

Forty-nine (49) organizations were invited to attend an Inter-Agency Meeting to discuss the Consolidated Plan. This meeting was not intended to be exclusive of any organization, and there was representation at the meeting from organizations that were previously unknown to the City's Community Development staff, which was encouraging in knowing that the meeting was well publicized. Individuals representing twenty-one (21) organizations attended the meeting, and several organizations that could not send a representative still sent in comments for the Plan and/or attended later Public Hearings. Twenty-nine (29) organizations – all of which had previously been invited to the Inter-Agency Meeting – were mailed targeted questionnaires for further consultation in their areas of expertise and service. At the close of the public comment period, Community Development staff continued to make direct contact with organizations if/when certain areas of the Plan were left without necessary consultation. These methods of contact were typically by email and/or telephone.

PR-15 Citizen Participation

1. Summary of citizen participation process/Efforts made to broaden citizen participation
Summarize citizen participation process and how it impacted goal-setting

Citizen Participation Outreach

Mode of Outreach	Target of Outreach	Summary of response/attendance	Summary of comments received	Summary of comments not accepted and reasons	URL (If applicable)
Other	Agencies that work with Low/Mod Population	June 12, 2012 - Letter notified agencies of the upcoming Interagency Meeting on the topic of the 2013-2017 Consolidated Plan. See the response/attendance information related to the Interagency Meeting.	Phone calls generated by the letter were mostly clarifying what the meeting was about. Some calls were from organizations unable to attend this meeting asking for other opportunities to comment, and they were encouraged to attend one of the upcoming Public Hearings or submit comments in writing before the deadline for public comment.		
Other	Agencies that work with Low/Mod Population	June 20, 2012 Interagency Meeting - Three staff and 26 organization representatives attended the meeting (more representatives may have attended that did not sign in).	The meeting included an overview of the City's CDBG/HOME Programs, the Consolidated Plan process, and the importance of gathering input from stakeholders and the community in general. Comments included advocacy		

Mode of Outreach	Target of Outreach	Summary of response/attendance	Summary of comments received	Summary of comments not accepted and reasons	URL (If applicable)
			for: Transitional Housing, Rental Subsidies, Security Deposit Assistance, Utility Assistance, Downpayment Assistance, Housing Rehabilitation, Reconstruction, New Construction of Affordable Housing, Geographically Targeted Programming, Public Service Grants, Infrastructure, Demolition, and Facility Improvements.		
Other	Minorities Non-targeted/broad community Churches and Neighborhood Groups	June 15, 2012 - Letters notifying individuals and faith based organizations of the upcoming Public Hearing schedule were mailed. See the response/attendance information related to the Public Hearing entries. Letters were mailed to 108 churches/faith-based organizations and 158 neighborhood representatives.	Phone calls generated by the letter were mostly clarifying the topics the hearings would cover, how our programs operate, etc. Limited comments about programming were offered by phone, but most related to housing rehabilitation needs.		
Public Meeting	Minorities Persons with disabilities	June 28, 2012 - The first Public Hearing was held in Ward 4 at the Jackie Dole Sherrill Community Center. Three staff members and	Comments included advocacy for continuation of the Facade Improvement Program, Housing Rehabilitation in the areas of Tipton St, Briarfield Apartments,		

Mode of Outreach	Target of Outreach	Summary of response/attendance	Summary of comments received	Summary of comments not accepted and reasons	URL (If applicable)
	Non-targeted/broad community Residents of Public and Assisted Housing Low-Income Area Residents	four citizens were in attendance.	and Lincoln St, Crime Prevention Programs for the area around Francis Street Apartments, Transportation to and Programs for youth, and Facility Improvements at the Historic Eaton School for use in Programming for the elderly and youth.		
Public Meeting	Minorities Persons with disabilities Non-targeted/broad community Residents of Public and Assisted Housing	July 5, 2012 - The second Public Hearing was held in Ward 5 at the Danny Hinton Community Center. Three staff members were in attendance; no citizens attended.			

Mode of Outreach	Target of Outreach	Summary of response/attendance	Summary of comments received	Summary of comments not accepted and reasons	URL (If applicable)
	Low-Income Area Residents				
Public Meeting	Minorities Persons with disabilities Non-targeted/broad community Residents of Public and Assisted Housing Low-Income Area Residents	July 9, 2012 - The third Public Hearing was held in Ward 2 at the C.E. Roy Community Center. Three staff members were in attendance; no citizens attended.			
Public Meeting	Minorities Persons with disabilities	July 10, 2012 - The fourth Public Hearing was held in Ward 1 at the Lake Terrace Convention Center. Three staff members and three citizens were in attendance.	Comments included advocacy for Housing Rehabilitation, Lead and asbestos abatement in homes and in facilities of non-profits, Infrastructure improvement in low/mod areas -		

Mode of Outreach	Target of Outreach	Summary of response/attendance	Summary of comments received	Summary of comments not accepted and reasons	URL (If applicable)
	Non-targeted/broad community Residents of Public and Assisted Housing Low-Income Area Residents		particularly Palmer's Crossing, Demolition of homes contributing to blight, Single Room Occupancy housing for the mentally ill, and use of Public Facilities as emergency/transitional housing for the homeless. Some of the comments received were from a citizen representing a local non-profit, and those comments are also reflected in the agency consultation section of the Consolidated Plan.		
Public Meeting	Minorities Persons with disabilities Non-targeted/broad community Residents of Public and Assisted Housing	July 12, 2012 - The fifth Public Hearing was held in Ward 3 at the Thames Elementary school auditorium. Two staff members and two citizens were in attendance.	Comments included advocacy for Demolition activities, a De-Construction/salvage approach to demolition, Housing Rehabilitation, Targeted efforts in Flood Zone areas such as Mobile-Bouie neighborhoods (Northeast Hattiesburg), Education for residents of the flood zones as to the limitations and opportunities for flood zone development and improvement, and Youth Development Programs. Citizens also voiced concern that the		

Mode of Outreach	Target of Outreach	Summary of response/attendance	Summary of comments received	Summary of comments not accepted and reasons	URL (If applicable)
	Low-Income Area Residents		blight in the flood zone areas is likely to continue because of the limited resources of the people living there now, and that future development may only come from those that can afford higher-end development, and that there is a concern that current residents may be left out or pushed out in favor of such development.		
Newspaper Ad	Minorities Persons with disabilities Non-targeted/broad community Residents of Public and Assisted Housing Low-Income	June 8, 2012 - Public Notice advertised upcoming Public Hearings on the topic of the 2013-2017 Consolidated Plan. See the response/attendance information related to the Public Hearing entries.	Phone calls generated by the advertisement were mostly clarifying the topics the hearings would cover, how our programs operate, etc. Limited comments about programming were offered by phone, but most related to housing rehabilitation needs.		

Mode of Outreach	Target of Outreach	Summary of response/attendance	Summary of comments received	Summary of comments not accepted and reasons	URL (If applicable)
	Area Residents				
Newspaper Ad	Minorities Persons with disabilities Non-targeted/broad community Residents of Public and Assisted Housing Low-Income Area Residents	June 15, 2012 - Public Notice advertised upcoming Public Hearings on the topic of the 2013-2017 Consolidated Plan. See the response/attendance information related to the Public Hearing entries.	Phone calls generated by the advertisement were mostly clarifying the topics the hearings would cover, how our programs operate, etc. Limited comments about programming were offered by phone, but most related to housing rehabilitation needs.		
Newspaper Ad	Minorities Persons with disabilities Non-targeted/broad	September 21, 2012 - Notice of Availability of the DRAFT 2013-2017 Consolidated Plan and 2013 Action Plan was published in the Hattiesburg American.	Comments included additionaly advocacy for affordable housing options for homeless persons - particularly the disabled and those living with HIV/AIDS. Program staff experienced a heightened interest in the Down Payment Assistance Program through telephone inquiries and		

Mode of Outreach	Target of Outreach	Summary of response/attendance	Summary of comments received	Summary of comments not accepted and reasons	URL (If applicable)
	community Residents of Public and Assisted Housing Low-Income Area Residents		submission of applications.		

Table 4 – Citizen Participation Outreach

Needs Assessment

NA-05 Overview

Needs Assessment Overview

The following Needs Assessment provides some perspective on the condition of housing in the City of Hattiesburg through a review of particular categories of comparison and through different types of housing needs. The assessment serves to compare different types of housing concerns/issues/needs by income category, by household type, by geography, and by race/ethnic group.

According to mapping data, and to the Community Development Division staff's past experience, there is a decidedly greater need for community development efforts in the City's Easternmost Wards and U.S. Census Tracts. Generally speaking – and there are certainly exceptions – there are greater concentrations of minority households and greater concentrations of lower-income households in the Eastern part of the City. This area of the City is also marked with a large area of flood zone, particularly near the Leaf River, which can be an obstacle in the area of housing and marketability.

The Needs Assessment also identifies disproportionate needs in terms of housing cost burden, deteriorating housing conditions, and severe housing problems. In general, there are some areas of need that are disproportionately greater among African-Americans than any other race/ethnicity, but in most cases much of the disproportion is comparable to the distribution among different races/ethnicities within the income category.

NA-10 Housing Needs Assessment

Summary of Housing Needs

Housing needs in the City of Hattiesburg are varied and are documented by CHAS data, U.S. Census data, consultation with housing and social service agencies, and citizen input. Needs exist for homeowners, renters, homeless persons, those at risk of homelessness, and people with needs for specific services and housing characteristics. Code compliant housing, affordable housing, emergency shelter, transitional housing, and permanent housing for the homeless are all existing housing needs – many of which the City has made efforts to address in the past. Data shows that overcrowding conditions, excessive housing cost burdens, and housing that lacks basic, complete kitchen and/or bathroom facilities are characteristics that some citizens face. Understandably, the largest subsection of the population facing these specific housing issues are those with extremely low household income or no income at all.

Demographics	Based Year: 2000	Most Recent Year: 2009	% Change
Population	44,800	51,068	14%
Households	19,268	19,845	3%
Median Income	$24,409.00	$28,119.00	15%

Table 5 - Housing Needs Assessment Demographics

Data Source: 2005-2009 ACS Data

Number of Households Table

	0-30% HAMFI	>30-50% HAMFI	>50-80% HAMFI	>80-100% HAMFI	>100% HAMFI
Total Households	3,805	3,435	3,315	2,035	0
Small Family Households	1,145	1,490	1,070	3,790	0
Large Family Households	265	30	213	589	0
Household contains at least one person 62-74 years of age	265	400	364	249	1,069
Household contains at least one person age 75 or older	320	610	370	205	805
Households with one or more children 6 years old or younger	695	650	548	1,192	0
* the highest income category for these family types is >80% HAMFI					

Table 6 - Total Households Table

Data Source: 2005-2009 CHAS

Housing Needs Summary Tables for several types of Housing Problems

1. Housing Problems (Households with one of the listed needs)

	Renter					Owner				
	0-30% AMI	>30-50% AMI	>50-80% AMI	>80-100% AMI	Total	0-30% AMI	>30-50% AMI	>50-80% AMI	>80-100% AMI	Total
Substandard Housing - Lacking complete plumbing or kitchen facilities	75	20	55	0	150	0	0	0	0	0
Severely Overcrowded - With >1.51 people per room (and complete kitchen and plumbing)	25	0	19	0	44	30	10	0	0	40
Overcrowded - With 1.01-1.5 people per room (and none of the above problems)	145	50	100	60	355	0	10	40	10	60
Housing cost burden greater than 50% of income (and none of the above problems)	1,815	910	165	90	2,980	445	280	85	55	865
Housing cost burden greater than 30% of income (and none of the above problems)	150	1,265	870	134	2,419	265	175	370	215	1,025
Zero/negative Income (and none of the above problems)	335	0	0	0	335	29	0	0	0	29

Table 7 – Housing Problems Table

Data Source: 2005-2009 CHAS

2. Housing Problems (Households with one or more Housing problems: Lacks kitchen or bathroom, Overcrowding, cost burden)

	Renter					Owner				
	0-30% AMI	>30-50% AMI	>50-80% AMI	>80-100% AMI	Total	0-30% AMI	>30-50% AMI	>50-80% AMI	>80-100% AMI	Total
Having 1 or more of four housing problems	2,060	980	340	150	3,530	475	300	120	65	960
Having none of four housing problems	545	1,620	1,750	1,070	4,985	360	545	1,110	740	2,755
Household has negative income, but none of the other housing problems	335	0	0	0	335	29	0	0	0	29

Table 8 – Housing Problems 2

Data Source: 2005-2009 CHAS

3. Cost Burden > 30%

	Renter				Owner			
	0-30% AMI	>30-50% AMI	>50-80% AMI	Total	0-30% AMI	>30-50% AMI	>50-80% AMI	Total
Small Related	525	1,075	290	1,890	290	215	225	730
Large Related	140	10	29	179	40	20	4	64
Elderly	120	250	70	440	245	210	179	634
Other	1,300	865	665	2,830	170	29	50	249
Total need by income	2,085	2,200	1,054	5,339	745	474	458	1,677

Table 9 – Cost Burden > 30%

Data Source: 2005-2009 CHAS

4. Cost Burden > 50%

	Renter				Owner			
	0-30% AMI	>30-50% AMI	>50-80% AMI	Total	0-30% AMI	>30-50% AMI	>50-80% AMI	Total
Small Related	445	375	20	840	185	130	10	325
Large Related	125	10	0	135	40	20	0	60
Elderly	85	155	10	250	105	105	65	275
Other	1,255	365	145	1,765	150	29	10	189
Total need by income	1,910	905	175	2,990	480	284	85	849

Table 10 – Cost Burden > 50%

Data Source: 2005-2009 CHAS

5. Crowding (More than one person per room)

	Renter					Owner				
	0-30% AMI	>30-50% AMI	>50-80% AMI	>80-100% AMI	Total	0-30% AMI	>30-50% AMI	>50-80% AMI	>80-100% AMI	Total
Single family households	170	10	54	0	234	0	20	10	0	30
Multiple, unrelated family households	0	40	25	0	65	30	0	30	0	60
Other, non-family households	0	0	40	0	40	0	0	0	0	0
Total need by income	170	50	119	0	339	30	20	40	0	90

Table 11 – Crowding Information

Data Source: 2005-2009 CHAS

What are the most common housing problems?

The most common housing problems include code compliant housing. Whether owner occupied or rental, decent, safe, sanitary housing is a genuine concern particularly in the low-income census tracts of the City. Needs range from basic repair of critical housing systems to complete rehabilitation of deteriorated structures. Many properties reach a point of deterioration at which rehabilitation is infeasible.

The City's aging housing stock is a common concern particularly in the low-income census tracts. Older homes require more maintenance and regular repairs, which may be difficult or impossible for a person to finance if their income does not allow for it. Older homes also pose a greater health risk by way of lead paint hazards and asbestos hazards.

A substantial amount of the City's land area – especially in the Eastern part of the City – is designated as a flood zone. With some minor exceptions, flood zones in the City mostly cover low-income census tracts. Development, including rehabilitation of homes in the flood zone, which requires a permit, is limited by FEMA requirements and local building codes as to the amount of work that can be done without elevating a home above the base flood elevation. This requirement hampers homeowners in the flood zone from making certain substantial repairs or upgrades to their homes. Homes that are already in significant disrepair are less likely to be rehabilitated because regulation would prohibit the permitting of substantial work. This obstacle contributes to continued deterioration of such neighborhoods.

Code compliance and decent, sanitary housing standards for rental housing are a concern as well as problems in this area are shown to impact low-income citizens to a greater degree.

Are any populations/household types more affected than others by these problems?

Understandably, these housing problems impact low-income residents to a greater degree, and the lower the income of the household, the more likely they are to face these and similar housing problems. Potentially, people moving out of transitional housing into permanent living arrangements will be more likely to face such housing problems as well. Households with zero income or low, fixed-incomes are more likely to be impacted by these problems; as an example, these households may be elderly or disabled and receiving social security or disability income, and the limited amount may limit their housing options or ability to make repairs.

Describe the characteristics and needs of Low-income individuals and families with children (especially extremely low-income) who are currently housed but are at imminent risk of either residing in shelters or becoming unsheltered 91.205(c)/91.305(c)). Also discuss the needs of formerly homeless families and individuals who are receiving rapid re-housing assistance and are nearing the termination of that assistance

While there is no single description that identifies all low-income individuals and families, there are several characteristics that are common among such individuals and families. Such characteristics include training, education, and employment challenges; individuals with less education and/or no technical skills are likely to encounter challenges in finding employment other than what would be considered low-income. Likewise, training, education, and employment challenges make it more likely that an individual will be employed in part time or even temporary work, which may be more volatile. Other characteristics of low-income populations include special needs such as physical or mental disabilities.

Common needs among low-income individuals and families are: improved access to the existing network of public services available in the community, opportunities to access housing choice vouchers, services to supplement rent and utilities if/when individuals/families encounter financial hardship, housing opportunities for special needs populations, transitional housing and permanent supportive housing - particularly for families. These needs will also be common among many individuals and families that are formerly homeless and nearing the termination of any temporary assistance provided.

If a jurisdiction provides estimates of the at-risk population(s), it should also include a description of the operational definition of the at-risk group and the methodology used to generate the estimates:

n/a – The City has no such estimate.

Specify particular housing characteristics that have been linked with instability and an increased risk of homelessness

The City has received no information that would lead to the obvious conclusion that a particular housing characteristic is/has been linked with instability and/or an increased risk of homelessness.

NA-15 Disproportionately Greater Need: Housing Problems

Assess the need of any racial or ethnic group that has disproportionately greater need in comparison to the needs of that category of need as a whole.

0%-30% of Area Median Income

Housing Problems	Has one or more of four housing problems	Has none of the four housing problems	Household has no/negative income, but none of the other housing problems
Jurisdiction as a whole	2,955	485	370
White	1,110	195	260
Black / African American	1,725	285	79
Asian	70	0	0
American Indian, Alaska Native	0	0	0
Pacific Islander	0	0	0
Hispanic	35	0	0

Table 12 - Disproportionally Greater Need 0 - 30% AMI

Data Source: 2005-2009 CHAS

*The four housing problems are:
1. Lacks complete kitchen facilities, 2. Lacks complete plumbing facilities, 3. More than one person per room, 4.Cost Burden greater than 30%

30%-50% of Area Median Income

Housing Problems	Has one or more of four housing problems	Has none of the four housing problems	Household has no/negative income, but none of the other housing problems
Jurisdiction as a whole	2,715	725	0
White	940	315	0
Black / African American	1,530	410	0
Asian	55	0	0
American Indian, Alaska Native	15	0	0
Pacific Islander	0	0	0
Hispanic	120	0	0

Table 13 - Disproportionally Greater Need 30 - 50% AMI

Data Source: 2005-2009 CHAS

*The four housing problems are:
1. Lacks complete kitchen facilities, 2. Lacks complete plumbing facilities, 3. More than one person per room, 4.Cost Burden greater than 30%

50%-80% of Area Median Income

Housing Problems	Has one or more of four housing problems	Has none of the four housing problems	Household has no/negative income, but none of the other housing problems
Jurisdiction as a whole	1,690	1,620	0
White	800	650	0
Black / African American	715	950	0
Asian	84	0	0
American Indian, Alaska Native	15	10	0
Pacific Islander	0	0	0
Hispanic	60	15	0

Table 14 - Disproportionally Greater Need 50 - 80% AMI

Data Source: 2005-2009 CHAS

*The four housing problems are:
1. Lacks complete kitchen facilities, 2. Lacks complete plumbing facilities, 3. More than one person per room, 4.Cost Burden greater than 30%

80%-100% of Area Median Income

Housing Problems	Has one or more of four housing problems	Has none of the four housing problems	Household has no/negative income, but none of the other housing problems
Jurisdiction as a whole	575	1,460	0
White	280	780	0
Black / African American	265	620	0
Asian	0	40	0
American Indian, Alaska Native	0	0	0
Pacific Islander	0	0	0
Hispanic	30	20	0

Table 15 - Disproportionally Greater Need 80 - 100% AMI

Data Source: 2005-2009 CHAS

*The four housing problems are:
1. Lacks complete kitchen facilities, 2. Lacks complete plumbing facilities, 3. More than one person per room, 4.Cost Burden greater than 30%

NA-20 Disproportionately Greater Need: Severe Housing Problems

Assess the need of any racial or ethnic group that has disproportionately greater need in comparison to the needs of that category of need as a whole.

0%-30% of Area Median Income

Housing Problems	Has one or more of four housing problems	Has none of the four housing problems	Household has no/negative income, but none of the other housing problems
Jurisdiction as a whole	2,540	900	370
White	1,035	275	260
Black / African American	1,395	620	79
Asian	70	0	0
American Indian, Alaska Native	0	0	0
Pacific Islander	0	0	0
Hispanic	30	4	0

Table 16 – Severe Housing Problems 0 - 30% AMI

Data Source: 2005-2009 CHAS

*The four severe housing problems are:
1. Lacks complete kitchen facilities, 2. Lacks complete plumbing facilities, 3. More than 1.5 persons per room, 4.Cost Burden over 50%

30%-50% of Area Median Income

Housing Problems	Has one or more of four housing problems	Has none of the four housing problems	Household has no/negative income, but none of the other housing problems
Jurisdiction as a whole	1,275	2,165	0
White	440	815	0
Black / African American	720	1,220	0
Asian	15	40	0
American Indian, Alaska Native	0	15	0
Pacific Islander	0	0	0
Hispanic	45	75	0

Table 17 – Severe Housing Problems 30 - 50% AMI

Data Source: 2005-2009 CHAS

*The four severe housing problems are:
1. Lacks complete kitchen facilities, 2. Lacks complete plumbing facilities, 3. More than 1.5 persons per room, 4.Cost Burden over 50%

50%-80% of Area Median Income

Housing Problems	Has one or more of four housing problems	Has none of the four housing problems	Household has no/negative income, but none of the other housing problems
Jurisdiction as a whole	455	2,860	0
White	120	1,330	0
Black / African American	220	1,435	0
Asian	40	44	0
American Indian, Alaska Native	15	10	0
Pacific Islander	0	0	0
Hispanic	60	15	0

Table 18 – Severe Housing Problems 50 - 80% AMI

Data Source: 2005-2009 CHAS

*The four severe housing problems are:
1. Lacks complete kitchen facilities, 2. Lacks complete plumbing facilities, 3. More than 1.5 persons per room, 4.Cost Burden over 50%

80%-100% of Area Median Income

Housing Problems	Has one or more of four housing problems	Has none of the four housing problems	Household has no/negative income, but none of the other housing problems
Jurisdiction as a whole	220	1,815	0
White	120	940	0
Black / African American	75	815	0
Asian	0	40	0
American Indian, Alaska Native	0	0	0
Pacific Islander	0	0	0
Hispanic	30	20	0

Table 19 – Severe Housing Problems 80 - 100% AMI

Data Source: 2005-2009 CHAS

*The four severe housing problems are:
1. Lacks complete kitchen facilities, 2. Lacks complete plumbing facilities, 3. More than 1.5 persons per room, 4.Cost Burden over 50%

NA-25 Disproportionately Greater Need: Housing Cost Burdens

Assess the need of any racial or ethnic group that has disproportionately greater need in comparison to the needs of that category of need as a whole.

Housing Cost Burden

Housing Cost Burden	<=30%	30-50%	>50%	No / negative income (not computed)
Jurisdiction as a whole	11,485	3,945	4,040	370
White	6,550	1,720	1,720	260
Black / African American	4,485	2,015	2,040	79
Asian	235	79	90	0
American Indian, Alaska Native	40	15	0	0
Pacific Islander	0	0	0	0
Hispanic	155	80	130	0

Table 20 – Greater Need: Housing Cost Burdens AMI

Data Source: 2005-2009 CHAS

NA-30 Disproportionately Greater Need: Discussion

Income categories in which a racial or ethnic group has disproportionately greater need

There are instances in Housing Problems and Severe Housing Problems that indicate a disproportionately greater representation of black/African-American households even among specific income groups. In particular, the lower the income categories (0-30% and 30-50% of AMI) were more likely to document such disproportions. This concept is addressed in more detail in previous segments of the Consolidated Plan.

Needs not previously identified

The needs of low-income communities are plenty, but strictly in terms of housing, code compliant housing, safe living conditions, and weatherization are basic, physical needs in the housing stock – both owner-occupied and rental. Additionally, there is a need in the community for rental assistance (such as Section 8), as evidenced in the current shortage of such vouchers in existing programs.

Are any of those racial or ethnic groups located in specific areas or neighborhoods in your community?

A comparison of a map showing minority concentrations in the City of Hattiesburg and a map showing the concentration of low-income households in the City reveal glaring similarities. Particular areas (but certainly not all areas) of Wards 2, 4, and 5 are identified as low-income areas, which also may be considered “majority-minority” areas in that black/African-American population is significantly higher than white population.

NA-35 Public Housing

Introduction

The Hattiesburg Housing Authority is the local housing authority in the City of Hattiesburg with 120 units at each of two housing developments, and 28 single-family units at each of two additional developments for a total of 296 units.

Totals in Use

Program Type									
	Certificate	Mod-Rehab	Public Housing	Total	Project - based	Tenant - based	Special Purpose Voucher		
							Veterans Affairs Supportive Housing	Family Unification Program	Disabled *
# of units vouchers in use	0	0	294	0	0	0	0	0	0

*includes Non-Elderly Disabled, Mainstream One-Year, Mainstream Five_year, and Nursing Home Transition

Table 21 - Public Housing by Program Type

Data Source: PIC (PIH Information Center)

Characteristics of Residents

Program Type									
	Certificate	Mod-Rehab	Public Housing	Total	Project - based	Tenant - based	Special Purpose Voucher		
							Veterans Affairs Supportive Housing	Family Unification Program	Disabled *
Average Annual Income	0	0	9,801	0	0	0	0	0	0
Average length of stay	0	0	5	0	0	0	0	0	0
Average Household size	0	0	2	0	0	0	0	0	0

Program Type									
	Certificate	Mod-Rehab	Public Housing	Total	Project - based	Tenant - based	Special Purpose Voucher		
							Veterans Affairs Supportive Housing	Family Unification Program	Disabled *
# Homeless at admission	0	0	0	0	0	0	0	0	0
# of Elderly Program Participants (>62)	0	0	43	0	0	0	0	0	0
# of Disabled Families	0	0	68	0	0	0	0	0	0
# of Families requesting accessibility features	0	0	294	0	0	0	0	0	0
# of HIV/AIDS program participants	0	0	0	0	0	0	0	0	0
# of DV victims	0	0	0	0	0	0	0	0	0
***includes Non-Elderly Disabled, Mainstream One-Year, Mainstream Five_year, and Nursing Home Transition**									

Table 22 – Characteristics of Public Housing Residents by Program Type

Data Source: PIC (PIH Information Center)

Race of Residents

Program Type									
Race	Certificate	Mod-Rehab	Public Housing	Total	Project - based	Tenant - based	Special Purpose Voucher		
							Veterans Affairs Supportive Housing	Family Unification Program	Disabled *
White	0	0	11	0	0	0	0	0	0
Black/African American	0	0	283	0	0	0	0	0	0
Asian	0	0	0	0	0	0	0	0	0
American Indian/Alaska	0	0	0	0	0	0	0	0	0

Program Type									
Race	Certificate	Mod-Rehab	Public Housing	Total	Project - based	Tenant - based	Special Purpose Voucher		
							Veterans Affairs Supportive Housing	Family Unification Program	Disabled *
Native									
Pacific Islander	0	0	0	0	0	0	0	0	0
Other	0	0	0	0	0	0	0	0	0
*includes Non-Elderly Disabled, Mainstream One-Year, Mainstream Five_year, and Nursing Home Transition									

Table 23 – Race of Public Housing Residents by Program Type

Data Source: PIC (PIH Information Center)

Ethnicity of Residents

Program Type									
Race	Certificate	Mod-Rehab	Public Housing	Total	Project - based	Tenant - based	Special Purpose Voucher		
							Veterans Affairs Supportive Housing	Family Unification Program	Disabled *
Hispanic	0	0	0	0	0	0	0	0	0
Not Hispanic	0	0	294	0	0	0	0	0	0
*includes Non-Elderly Disabled, Mainstream One-Year, Mainstream Five_year, and Nursing Home Transition									

Table 24 – Ethnicity of Public Housing Residents by Program Type

Data Source: PIC (PIH Information Center)

Section 504 Needs Assessment

Needs of public housing tenants and applicants on the waiting list for accessible units

In general, the two 120-unit developments are more than 70 years old, and need to be replaced with new units. In terms of accessible units, of the 296 total units, 13 are suited as handicap-accessible units. The waiting list as of July 13, 2012 includes 337 households, of which, 22 require handicap-accessible units.

Most immediate needs of residents of Public Housing and Housing Choice voucher holders

Of the households on the waiting list for public housing in the Hattiesburg Housing Authority, eight (8) are described as elderly households and 22 are described as disabled households. There is a need for 126 one-bedroom units (18 accessible), 87 two-bedroom units (3 accessible), and 124 three-bedroom units (1 accessible). Eighty-eight percent (88.5%) of the households on the waiting list are black/African-American and ten percent (10.3%) are white households. One percent (1%) is Hispanic and less than 1% is Asian.

The most immediate need of residents of public housing and Housing Choice voucher holders is availability. There are more families on the waiting list for housing than there are units that exist. Additionally, and although the Hattiesburg Housing Authority is not the issuer of Section 8 vouchers, it is necessary to point out that there are currently no Section 8 vouchers available through the issuer – the Mississippi Region No. 8 Housing Authority. The availability need for additional units pertains more to those on the waiting list than to families that are already housed in public units; the most immediate need of existing residents of public housing is updated units. The age of the existing units is such that general maintenance has become more expensive over time. Certain modernization efforts and upgrades may be deemed infeasible in favor of newer, replacement developments.

How do these needs compare to the housing needs of the population at large

The unavailability of Housing Choice vouchers is a common problem to the population at large. Also common to the needs of public housing residents is the aging housing stock. Although the Hattiesburg Housing Authority maintains code compliance in its properties, the basic premise that older housing units are more expensive to maintain, more prone to costly emergency repairs, and at some point become infeasible to rehabilitate, upgrade, and modernize, is common among any aging housing stock. Finally, public housing and the City's housing stock are comparable in the sense that there is a need for affordable, code compliant housing: the Hattiesburg Housing Authority has a waiting list of families seeking the authority's code compliant units, and the data presented in previous sections of the Consolidated Plan indicate that there are a significant number of households in Hattiesburg living in conditions that are unsafe, dilapidated, and/or burdensome in terms of cost.

NA-40 Homeless Needs Assessment

Homeless Needs Assessment

Population	Estimate the # of persons experiencing homelessness on a given night		Estimate the # experiencing homelessness each year	Estimate the # becoming homeless each year	Estimate the # exiting homelessness each year	Estimate the # of days persons experience homelessness
	Sheltered	Unsheltered				
Persons in Households with Adult(s) and Child(ren)	77	41	1,019	754	559	0
Persons in Households with Only Children	2	0	18	13	10	0
Persons in Households with Only Adults	65	83	1,278	946	701	0
Chronically Homeless Individuals	23	23	0	0	0	0
Chronically Homeless Families	3	25	0	0	0	0
Veterans	11	6	0	0	0	0
Unaccompanied Child	2	0	18	13	10	0
Persons with HIV	3	2	0	0	0	0

Table 25 - Homeless Needs Assessment

Data Source Comments: Data used originated from the Point in Time survey completed by Mississippi United to End Homelessness. Aggregate data was available for the sheltered/unsheltered data above, but not broken down by county or City. As such, the total count for Forrest County was compared to the total count for the entire survey. Forrest County's count represented approximately 28% of the total. This percentage was used as the factor against aggregate figures to arrive at the data above.Other data related to the number of individuals assigned to different living facilities during calendar year 2011 - emergency, transitional, permanent, etc. - was used to estimate the number experiencing homelessness, becoming homeless, and exiting homelessness. Factors such as lengths of stay less than 365 days and number of individuals placed into permanent housing arrangements were used to better define the estimates. Such estimates could not be deduced for chronic homelessness, veterans, and persons with HIV.

Population includes Rural Homeless: some

Jurisdiction's Rural Homeless Population

In the Hattiesburg area, rural homelessness is more "invisible" in that people strive to maintain independence. In addition, there are fewer services available to the rural homeless, and for that reason they come to the City to receive services. It is estimated that 90-95% of those represented in the Forrest and Lamar County areas receive services within the City of Hattiesburg.

For persons in rural areas who are homeless or at risk of homelessness, describe the nature and extent of unsheltered and sheltered homelessness with the jurisdiction

One characteristic of rural homelessness is individuals or families living in substandard housing, or in conditions that are not intended for human habitation. "Neighborhoods without walls" are known to exist in several undeveloped, wooded areas within the City. In general, homeless individuals and families in rural areas - both inside and outside the City limits often migrate to Hattiesburg's urban center because of the availability of services from supportive agencies.

If data is not available for the categories "number of persons becoming and exiting homelessness each year," and "number of days that persons experience homelessness," describe these categories for each homeless population type (including chronically homeless individuals and families, families with children, veterans and their families, and unaccompanied youth):

n/a - Data from the 2011 Point In Time Analysis by Mississippi United to End Homelessness, the balance-of-state CoC, in which Hattiesburg is located, was utilized to complete the chart above.

Nature and Extent of Homelessness by Racial and Ethnic Group

The data above would indicate that homelessness does not impact a particular race or ethnic group to a disproportionately greater extent than any other. A point of interest in the data, however, is that although a greater number of low-income residents are Black/African-American (disproportionately in some cases), there is a greater number of White individuals/households reported as homeless.

Nature and Extent of Unsheltered and Sheltered Homelessness, including Rural Homelessness

The comparison of numbers between rural homeless and sheltered or unsheltered homeless within urbanized areas is difficult to make. Generally speaking, the City of Hattiesburg, being the largest and the closest urbanized area within Forrest County, boasts the most services available that benefit homeless persons. As a result, many otherwise "rural homeless" travel to the City.

In simply comparing sheltered to unsheltered homeless, there is approximately a 50/50 distribution, with an insignificantly higher percentage (less than 2%) of unsheltered persons.

Discussion

n/a - Data from the 2011 Point In Time Analysis by Mississippi United to End Homelessness, the balance-of-state CoC, in which Hattiesburg is located, was utilized to complete the chart above.

NA-45 Non-Homeless Special Needs Assessment

Characteristics of Special Needs Populations

Special needs populations in the City of Hattiesburg are not limited to a specific demographic segment or family type. People living with HIV/AIDS, people living with disabilities (physical and/or cognitive), and the elderly living with disabilities are particular groups of special needs populations in the City, and all have varying needs depending on the specific situations of the individuals/households.

Housing and Supportive Service Needs and Determination

Needs are determined largely by the organizations that service these populations directly, as they are most capable of assessing needs as they work hand-in-hand with such clients. Needs of these populations include specific housing arrangements suitable for their specific special needs, which may involve transitional housing and/or permanent housing. Supportive services for special needs populations can vary widely but include services such as counseling, case management, health services, mental/behavioral health services, etc.

Public Size and Characteristics of Population with HIV / AIDS

The known population of persons living with HIV/AIDS in Forrest County is 431. 69% are male, 31% female. 72.5% are Black/African-American, 22.9% are White, and the balance is other. 2.2% are Hispanic. The total population has risen 26.4% in the last five years. According to survey data recently updated by the Mississippi Department of Health, Mississippi was declared the #6 state in the nation for the most new infections reported. Among Mississippi counties, Forrest County ranked #5.

Discussion

The City of Hattiesburg recognizes that there are special needs populations in the City and the surrounding area whose needs, while partly specific to whatever special need they may have, are still largely similar to the needs of the community in general, which is a basic improvement and maintenance of quality of life. The City recognizes that whether it is housing or supportive services for special needs residents, there are opportunities in planning Community Development activities that can specifically and directly benefit special needs populations.

NA-50 Non-Housing Community Development Needs

Public Facilities

The City's Community Development Division partners with several non-profit organizations in executing its Action Plans, and some such agencies have facilities that can be classified as Public Facilities. Like any facilities, all are in constant need of maintenance and upkeep; some are in need of specific improvements like generators, additions, or rehabilitation; some are in need of ADA compliant access; and some are in need of environmental remediation (lead, asbestos, mold, etc.) to bring the buildings into a condition in which they are 100% functional for use. Additionally, the City's Parks & Recreation Department maintains a list of facility needs for which there are limited or no current resources; many of these facility improvements, upgrades, and additions are located in the City's low-income areas. To address all of the Parks & Recreation items would exceed $3,000,000.

Need Determination

Needs were identified in consultation with the City's Parks & Recreation Department, which oversees such areas as Community Centers, and consultation with various non-profits through the Consolidated Plan's development process.

Public Improvements

There is a need for improvements to streets and drainage in particular – especially in low-income areas. Particular potential projects include drainage improvements in the Timberton Park Neighborhood, a "complete streets" implementation with expected upgrades along Country Club Road, and a Rails-to Trails project through the Dabbs Street neighborhood, extending from William Carey University to Edwards Street, and along an abandoned rail bed to downtown. Similar drainage and street improvements, as well as construction of alternate transportation/recreation opportunities are possible in other low-income areas of the City as well. There is also a mutual interest with adjoining jurisdictions to maintain and expand the wastewater system, improve and expand industrial park capabilities, and complete outstanding regional road projects. The Palmer's Crossing area, having been mentioned as a potential site for a distribution and logistics hub following the expansion of the Port of Gulfport, is an area of particular interest for infrastructure upgrades. Should plans for such a hub move forward, Public Improvements in and around such a site – regardless of where exactly it may be – could include street widening, increasing numbers of traffic lanes, construction and improvement of sidewalks, drainage improvements, corridor improvements, site development for economic development opportunities, and coordination with railroads for appropriate rail infrastructure.

Need Determination

Needs were identified in consultation with the City's Engineering Department and through citizen participation.

Public Services

Of all Community Development activities, the characteristics and purposes of Public Services and public service requests vary the greatest. Needs include meal programs/food banks, recreation opportunities for youth, education programs for youth, financial literacy and counseling, utility/rent/deposit assistance, support services for people living with HIV/AIDS, HIV/AIDS testing, jobs training programs, after school programs for children and youth, support services for homeless persons (varies greatly), medical services, mental/behavioral health services, lead poison screening, disability advocacy, fair housing education and housing counseling, business counseling for those seeking self-employment, adult literacy programs, programs to identify and address language/literacy disorders as early as possible in children, and day services ("day haven") for the homeless.

Need Determination

Needs were identified through consultation with various non-profits and other agencies that provide, or hope to provide the services identified.

Housing Market Analysis

MA-05 Overview

Housing Market Analysis Overview:

The following Market Analysis provides information on the housing market in the City of Hattiesburg by addressing the availability of housing, the cost of housing, the condition of the housing stock, public housing opportunities, barriers to housing, and homeless and special needs facilities. The Market Analysis section also brings into the discussion, community development needs like Infrastructure and Economic Development as it identifies demographics of the economic community and the area's workforce.

Through consultation with various agencies that service homeless and special needs populations, it was evident that there is a great need for facilities such as emergency shelter, transitional housing, and permanent supportive housing for homeless individuals and their families as well as facilities for special needs households.

MA-10 Number of Housing Units

Introduction

Although there are some indications of need in terms of affordable housing units, there is not an abundantly clear need in terms of total housing stock. There is not a preponderance of evidence that would indicate that people/households are homeless solely because there are no available housing units. Units are available, but affordability may be a factor because of some combination of employment and/or income, availability of housing vouchers, and location conducive to employment and/or transportation.

All rental properties by number of units

Property Type	Number	%
1-unit detached structure	19,845	65%
1-unit, attached structure	453	1%
2-4 units	2,836	9%
5-20 units	5,132	17%
More than 20 units	1,674	5%
Mobile Home, boat, RV, van, etc	598	2%
Total	***30,538***	***100%***

Table 26 – Rental Properties by Unit Number

Data Source: 2005-2009 ACS Data

Unit Size by Tenure

	Owners		Renters	
	Number	%	Number	%
No bedroom	27	0%	179	2%
1 bedroom	31	0%	3,364	29%
2 bedrooms	1,357	17%	5,480	47%
3 bedrooms	6,789	83%	2,618	22%
Total	***8,204***	***100%***	***11,641***	***100%***

Table 27 – Unit Size by Tenure

Data Source: 2005-2009 ACS Data

Number and Targeting of Units

The Hattiesburg Housing Authority is the only public housing authority that operates within the City of Hattiesburg, and they currently have 296 units – all of which are occupied. The City of Hattiesburg's Community Development Division, with funding through the HOME Investment Partnership Program, has constructed through partnership with other community organizations, a minimal number of housing units for low-income, first time homebuyers. The City's programs as well as the Hattiesburg Housing

Authority target low to moderate-income households. There is no targeting of family types, although in the case of the housing authority, the type of family served from their waiting list of applicants will be determined based on the type of unit (number of bedrooms, ADA accessibility, etc.) that has become available.

Units Expected to be lost from Inventory

Although the City of Hattiesburg's Community Development efforts include the demolition of housing units, these demolition projects are limited to vacant, often abandoned, dilapidated homes that are unsuitable and unsafe for occupancy. As such, these demolitions are not reducing the affordable housing inventory. Additionally, the Hattiesburg Housing Authority is undergoing efforts to begin the replacement of older units, but this process will not involve the long-term loss of affordable units.

Does the availability of housing units meet the needs of the population?

The Hattiesburg Housing Authority's waiting list of applicants is one indication that the housing stock in Hattiesburg may not be fully supporting the needs of the population. While the people on the waiting list may not necessarily be homeless, it is reasonable to presume that the people on the waiting list are not comfortable or accepting of their current living situation because of some combination of 1) cost burden, 2) physical housing condition, 3) overcrowding, or 4) some other economic and/or quality of life issue. Though there are some liberties being taken in this assessment, it is reasonable to presume that if an individual's needs/desires in all of these areas were being met, they would likely not be on a waiting list for a public housing unit.

Need for Specific Types of Housing

The Hattiesburg Housing Authority's significant waiting list indicates that there is a need for additional housing units. In addition to needs for traditional housing units, needs have been identified through consultation with several non-profit agencies and service providers, for particular special needs and homeless populations. These needs include single room occupancy units for mentally ill or other applicable populations, general transitional housing units (not specific to special needs groups) for individuals and families coming out of emergency shelter, and permanent affordable housing units conducive to individuals or families moving from transitional housing. The City of Hattiesburg also has a growing need for emergency shelter options for households facing homelessness.

MA-15 Cost of Housing

Cost of Housing

	Based Year: 2000	Most Recent Year: 2009	% Change
Median Home Value	65,400	97,800	50%
Median Contract Rent	374	478	28%

Table 28 – Cost of Housing

Data Source: 2005-2009 ACS Data

Rent Paid	Number	%
Less than $500	7,016	60.3%
$500-999	4,142	35.6%
$1,000-1,499	263	2.3%
$1,500-1,999	160	1.4%
$2,000 or more	60	0.5%
Total	***11,641***	***100.0%***

Table 29 - Rent Paid

Data Source: 2005-2009 ACS Data

Housing Affordability

% Units affordable to Households earning	Renter	Owner
30% HAMFI	No Data	No Data
50% HAMFI	No Data	No Data
80% HAMFI	No Data	No Data
100% HAMFI	No Data	No Data
Total	***0***	***0***

Table 30 – Housing Affordability

Data Source Comments:

Monthly Rent

Monthly Rent ($)	Efficiency (no bedroom)	1 Bedroom	2 Bedroom	3 Bedroom	4 Bedroom
Fair Market Rent	475	541	644	938	968
High HOME Rent	495	564	671	804	878
Low HOME Rent	433	464	557	643	718

Table 31 – Monthly Rent

Data Source: HUD FMR and HOME Rents

Availability of Sufficient Housing

The waiting list for housing at the Hattiesburg Housing Authority, as well as consultations with various non-profit agencies indicate that inventory of housing may not be sufficient for extremely low income residents, including households moving through transitional housing arrangements. Inventory of housing appears to be sufficient for households of higher income levels, although there are often credit/financing obstacles for those in the low- to moderate-income segments attempting to purchase a home even though the housing cost burden to own is often less than what one might face in a comparable rental arrangement.

Expected Change of Housing Affordability

Home values rose consistently in the early 2000's and spiked significantly in 2005 and 2006 following Hurricane Katrina. The troubles in the housing market and finance industry since 2009 have brought home values down. There has not been much impact to rents that would suggest they have come down in parity with home values since 2009.

Rent Comparison

Median Contract Rent is below that of Fair Market Rent and HOME Rents for all categories of units with the exception of zero-bedroom units. This would indicate that the majority of rental units in Hattiesburg are more affordable than what HUD considers as a fair/allowable value for such units. In terms of impacting strategies for affordable housing activities, this does not make a considerable case to justify the City focusing on creating affordable rental activities. Although the overall strategy may include certain rental activities, it is more likely that such activities will remain a smaller part of the overall strategy.

MA-20 Condition of Housing

Definitions

A home with a substandard condition is one in which there is any code violation, any health or safety concern or deficiency, or one that is lacking any properly functioning system including roof, electrical, plumbing, full bathroom, and kitchen. Substandard condition but suitable for rehabilitation is a property that can be rehabilitated within the framework of the City of Hattiesburg's Housing Rehabilitation, Repair, and Reconstruction Manual. As of 2012, the manual lists a limit on such a project at a hard cost of $50,000. It should be noted that this manual serves the purpose of the CDBG/HOME Rehabilitation Program, which only pertains to homeowner occupied units as of 2012. Should the program and/or manual change, or should additional programs and manual components be established in the future, the definition as it relates to "suitable for rehabilitation" will naturally be the greater of any similar thresholds described.

Condition of Units

Condition of Units	Owner-Occupied		Renter-Occupied	
	Number	%	Number	%
With one selected Condition	2,280	28%	5,966	51%
With two selected Conditions	56	1%	226	2%
With three selected Conditions	0	0%	32	0%
With four selected Conditions	0	0%	0	0%
No selected Conditions	5,868	72%	5,417	47%
Total	***8,204***	***101%***	***11,641***	***100%***

Table 32 - Condition of Units

Data Source: 2005-2009 ACS Data

Year Unit Built

Year Unit Built	Owner-Occupied		Renter-Occupied	
	Number	%	Number	%
2000 or later	448	5%	1,576	14%
1980-1999	1,513	18%	3,244	28%
1950-1979	4,474	55%	5,892	51%
Before 1950	1,769	22%	929	8%
Total	***8,204***	***100%***	***11,641***	***101%***

Table 33 – Year Unit Built

Data Source: 2005-2009 CHAS

Risk of Lead-Based Paint Hazard

Risk of Lead-Based Paint Hazard	Owner-Occupied		Renter-Occupied	
	Number	%	Number	%
Total Number of Units Built Before 1980	6,243	76%	6,821	59%
Housing Units build before 1980 with children present	1,943	24%	720	

Table 34 – Risk of Lead-Based Paint

Data Source: 2005-2009 CHAS

Vacant Units

	Suitable for Rehabilitation	Not Suitable for Rehabilitation	Total
Vacant Units	0	0	0
Abandoned Vacant Units	0	0	0
REO Properties	0	0	0
Abandoned REO Properties	0	0	0

Table 35 - Vacant Units

Data Source Comments:

Need for Owner and Rental Rehabilitation

The history of the City's Homeowner Rehabilitation Program indicates that there is still a great need for such work. In 2009, the City stopped taking applications for homeowner rehab when the list of applicants exceeded 300. The general condition of aging housing stock in Hattiesburg would indicate that there is likely an equal proportion of rental units in the City that are in need of rehabilitation. The promotion of homeownership and the existing, documented need for homeowner rehab justify a continued focus on homeowner rehab versus rental rehab in the future, although rental rehabilitation will be given consideration.

Estimated Number of Housing Units Occupied by Low or Moderate Income Families with LBP Hazards

Approximately 13,064 housing units in the City of Hattiesburg were built prior to 1980, and thus potentially contain lead-based paint hazards. It is estimated that 53% of Hattiesburg households are low- to moderate-income, so a simplified and conservative estimate of 6,924 units contain lead-based paint hazards and are occupied by LMI families. The actual number will be somewhat lower considering that 1) all LMI families do not reside in pre-1978 homes, 2) all pre-1980 homes do not have lead-based paint hazards, and 3) the City (as should any other entity using federal funds) abides by 24 CFR Part 35, which requires lead abatement on certain rehabilitation projects.

MA-25 Public and Assisted Housing

Introduction

The Hattiesburg Housing Authority is the only public housing authority that operates within the City limits. The Mississippi Regional Housing Authority No. 8 operates in the region and offers Section 8 vouchers that can be used within the City, but operates no public housing units.

Totals Number of Units

Program Type									
	Certificate	Mod-Rehab	Public Housing	Vouchers					
				Total	Project -based	Tenant -based	Special Purpose Voucher		
							Veterans Affairs Supportive Housing	Family Unification Program	Disabled *
# of units vouchers available			296						
# of accessible units									
# of FSS participants									
# of FSS completions									
*includes Non-Elderly Disabled, Mainstream One-Year, Mainstream Five_year, and Nursing Home Transition									

Table 36 – Total Number of Units by Program Type

Data Source: PIC (PIH Information Center)

Supply of Public Housing Development

The Hattiesburg Housing Authority has two developments with 120 units each, and two developments of 28 single-family units each, for a total of 296 units. The two 120-unit developments are more than 70 years old and are in need of replacement.

Public Housing Condition

Public Housing Development	Average Inspection Score
Hattiesburg Housing Authority	65

Table 37 - Public Housing Condition

Restoration and Revitalization Needs

As can be expected with aging buildings, there is a growing need for ongoing maintenance, and upgrades and rehabilitation efforts on older buildings are costly. The HHA has plans in place to begin replacing the older units in the coming years.

Strategy of Improving the Living Environment of low- and moderate Income Families

The Hattiesburg Housing Authority has a citizen participation process by which residents are involved in the development of capital improvement plans. Additionally, the plans to replace the older housing stock would improve the living environment for residents.

MA-30 Homeless Facilities

Introduction

INVENTORIES OF FACILITIES AND SERVICES

Pine Belt Mental Healthcare - Ivy Trace Female Group Home (7); The Oaks Male Group Home (10)

· Housing and mental healthcare for adults who are mentally ill; information and referral services

Breakthrough Community Services - Mercy House Group Home (6)

· Housing, counseling, and support services for youth who are in the Custody of the State

Salvation Army - Emergency shelter with (43) beds & three (3) baby beds; three (3) family rooms for women with children

· Emergency shelter, counseling, information and referral services

Domestic Abuse Family Shelter - Emergency shelter with twenty (20) beds for women and children and an area for children

· Full service shelters for women and children who are victims of domestic abuse; information and Referral services

South Mississippi Children's Center - Emergency shelter for children ages 10-17 for eleven (11) children for up to 45 days

· Shelter, diagnostic and evaluation services; information and referral services

Christian Services - Emergency shelter, Genesis Homes - three (3) homes for families with children; Transitional Program for up to 18 months for men 18 years old and older

· Shelter, counseling, employment assistance, etc.; information and referral services

AIDS Services Coalition - Transitional housing for up to ten (10) individuals with HIV/AIDS for up to two (2) years while working towards rehabilitation

· Housing, meals, counseling, educational programs, therapy, rental assistance, nutrition assistance, referral for child care, substance abuse counseling

Pine Grove Next Step - Housing and basic care management for up to 25 males and 30 females who are chronically homeless and suffer addiction, mental illness, or disability

· Housing, basic care, mental health, vocal rehab, case management

Special Needs Facilities and Services

The Consolidated Plan must describe the facilities and services that assist persons who are not homeless but who require supportive housing and programs for ensuring that persons returning from mental and physical health institutions receive appropriate supportive housing.

Agencies such as the following provide services and facilities to assist persons who are not homeless but who require supportive services, for persons who are returning from mental and physical health institutions: The Forrest County Health Department, Lamar County Health Department, Pine Belt Mental Health Resources, AIDS Services Coalition, Mississippi Department of Rehabilitation Services, Domestic Abuse Family Shelter, Salvation Army, and Christian Services.

Facilities Targeted to Homeless Persons

	Emergency Shelter Beds		Transitional Housing Beds	Permanent Supportive Housing Beds	
	Year Round Beds (Current & New)	Voucher / Seasonal / Overflow Beds	Current & New	Current & New	Under Development
Households with Adult(s) and Child(ren)	8	0	0	35	0
Unaccompanied Youth	35	0	95	81	0

	Emergency Shelter Beds		Transitional Housing Beds	Permanent Supportive Housing Beds	
	Year Round Beds (Current & New)	Voucher / Seasonal / Overflow Beds	Current & New	Current & New	Under Development
Households with Only Adults	0	0	0	27	0
Chronically Homeless Households	0	0	64	0	0
Veterans	15	0	0	0	0

Table 38 - Facilities Targeted to Homeless Persons

Data Source Comments: Data gathered from Mississippi United to End Homelessness.

Describe mainstream services, such as health, mental health, and employment services to the extent those services are use to complement services targeted to homeless persons

Pine Grove Behavioral Health & Addiction Services offers services to chronically homeless persons, which often involves health and mental health services. The University of Southern Mississippi's Institute for Disability Studies also provides case management services, which may vary depending on an individual's needs, but could include employability skills. Several agencies have expressed interest in the creation of a day haven for homeless persons, which would create a temporary address that may help in gaining employment, and may serve as a location from which other employment/employability services are provided.

List and describe services and facilities that meet the needs of homeless persons, particularly chronically homeless individuals and families, families with children, veterans and their families, and unaccompanied youth. If the services and facilities are listed on screen SP-40 Institutional Delivery Structure or screen MA-35 Special Needs Facilities and Services, describe how these facilities and services specifically address the needs of these populations.

Basic Facility Info is listed in Introduction section above - IDIS' character limit in this box prohibited a full answer

Facilities and Services/Non-Homeless

The following is a listing of the agencies providing facilities and services to the non-homeless who require supportive housing and other support needs:

Agency/Facility - Services Provided

Domestic Abuse Family Shelter - Shelter for victims of Domestic Violence; Child Care; Counseling

Christian Services - Emergency Shelter; Food; Counseling; Transitional Housing; Rent and Mortgage Assistance

Salvation Army - Food; Clothing; Medicine; Shelter; Rental Assistance

AIDS Services Coalition - Assistance with: Food, lodging, counseling, rental assistance, utility assistance, assistance with medications, HIV/AIDS prevention education, nutritional assistance, Food Pantry, referrals for child care, medical services, substance abuse/drug counseling, mental health, etc. The Coalition is the only HIV/AIDS service organization providing comprehensive HIV disease specific individual services and referral.

Boys & Girls Clubs - Wide variety of Youth Development Programs; Recreation; Crisis Intervention; Substance Abuse Prevention; Public Housing; Youth Sports Program

Pine Belt Mental Healthcare - Shelter for Alcohol and Drug Abusers; Temporary shelter for Transient Men and Women; Counseling; Food; Clothing; Mental Healthcare and counseling; Case Management; Severely limited housing

Forrest & Lamar County Health Departments - Home Health Care; Testing for Persons with AIDS; Provisions of Medicine and Health Care; Testing; Immunization

MS Dept of Rehab Services - Employment assistance

Meals on Wheels - Home delivery of meals to the elderly

Christian Services - Hot meals daily; Rental assistance; Utility assistance; Clothing; Help with cost of medicine; Referral to other assistance agencies

PACE Headstart - Child Care Program designed to allow parents to seek and maintain gainful employment in part; Educational Programs

Catholic Social and Community Services - Food; Clothing; Utility Assistance; Counseling; Assistance with housing

Breakthrough Community Services, Inc. - Utility Assistance

Pine Belt Community Services - Meals Program

American Red Cross - Emergency Support Services

United Way - Financial Literacy Programs

Facilities and Programs for Mentally and Physically Impaired

The availability of facilities and programs to serve the mentally and physically impaired are limited. Agencies known to serve mentally and physically impaired include, but are not limited to:

· Pine Belt Mental Healthcare

· Pine Grove Next Step

· Mississippi Department of Rehabilitation Services

· LIFE of South Mississippi

· Salvation Army

· Christian Services, Inc.

· AIDS Services Coalition

MA-35 Special Needs Facilities and Services

Including the elderly, frail elderly, persons with disabilities (mental, physical, developmental), persons with alcohol or other drug addictions, persons with HIV/AIDS and their families, public housing residents and any other categories the jurisdiction may specify, and describe their supportive housing needs

The City's interaction with several non-profit agencies that serve special needs groups serves as evidence that there is an ongoing need for such services in the City. The AIDS Services Coalition's 1-2-1 Haven House serves persons living with HIV/AIDS and provides various supportive services. Pine Grove Behavioral Health & Addiction Services serves chronically homeless populations, which often require services related to various addictions, physical health needs, and/or mental health services. Living Independently for Everyone (LIFE) serves as an advocate for people living with disabilities. Several organizations offer transitional housing options for homeless families and individuals; these organizations have case management service needs to assist their residents.

Describe programs for ensuring that persons returning from mental and physical health institutions receive appropriate supportive housing

The staff at Forrest General Hospital is trained to screen and identify patients that may have special housing and/or related supportive service needs. A procedure created by FGH and Pine grove Behavioral Health & Addiction Services ensures that hospital staff provides applicable referrals or involves the Pine Grove staff as needed in order to better determine and serve patients' special needs.

Specify the activities that the jurisdiction plans to undertake during the next year to address the housing and supportive services needs identified in accordance with 91.215(e) with respect to persons who are not homeless but have other special needs. Link to one-year goals. 91.315(e)

The Pinebelt Coalition on Homelessness includes representation from the City's Department of Federal Programs and the Department of Urban Development. Meetings of the coalition serve as an opportunity for appropriate City staff to become apprised of the goings on of the local agencies that directly serve the homeless and special needs populations. Collaboration at the meetings shed light on opportunities for the members – including the City – to partner for mutual purposes. In the next year, the City's Public Relations Office plans to produce a referral brochure related to local services for the homeless. Many of the Coalition members will be referenced, and the document will be a useful tool to provide to homeless individuals, the public, law enforcement, and other partner agencies. Additionally, the City's annual use of CDBG funds for Public Service activities often includes services that benefit the homeless and/or special needs populations. While specific public service activities have not been identified for 2013 and beyond (they will depend on results of an RFP process), it is a fair assumption that housing and supportive services will continue to be included. Purely in terms of housing, the City's Downpayment

Assistance Program (HOME funds) can be combined with a similar downpayment program administered by the USM Institute for Disability Studies (for dually eligible applicants).

For entitlement/consortia grantees: Specify the activities that the jurisdiction plans to undertake during the next year to address the housing and supportive services needs identified in accordance with 91.215(e) with respect to persons who are not homeless but have other special needs. Link to one-year goals. (91.220(2))

The Pinebelt Coalition on Homelessness includes representation from the City's Department of Federal Programs and the Department of Urban Development. Meetings of the coalition serve as an opportunity for appropriate City staff to become apprised of the goings on of the local agencies that directly serve the homeless and special needs populations. Collaboration at the meetings shed light on opportunities for the members – including the City – to partner for mutual purposes. In the next year, the City's Public Relations Office plans to produce a referral brochure related to local services for the homeless. Many of the Coalition members will be referenced, and the document will be a useful tool to provide to homeless individuals, the public, law enforcement, and other partner agencies. Additionally, the City's annual use of CDBG funds for Public Service activities often includes services that benefit the homeless and/or special needs populations. While specific public service activities have not been identified for 2013 and beyond (they will depend on results of an RFP process), it is a fair assumption that housing and supportive services will continue to be included. Purely in terms of housing, the City's Downpayment Assistance Program (HOME funds) can be combined with a similar downpayment program administered by the USM Institute for Disability Studies (for dually eligible applicants).

MA-40 Barriers to Affordable Housing

Negative Effects of Public Policies on Affordable Housing and Residential Investment

The City's zoning ordinance and related regulations are conducive to affordable housing development. As public policies are concerned, the only notable barrier to affordable housing has to do with development in flood zones where FEMA regulations create limitations on the value/cost of rehabilitation that can take place on existing structures. Historically, new affordable housing has not been created in flood zones when using CDBG or HOME funds because of the challenges of meeting the development requirements. The City will make it known to partner agencies and CHDOs that such new developments are possible given compliance with certain development and insurance requirements.

In 2012, the City completed an Analysis of Impediments to Fair Housing Choice. Impediments/challenges identified include 1) a lack of fair housing education, 2) the unavailability of code standard affordable housing for homeownership, 3) the unavailability of code standard housing, both rental and homeownership for low- to moderate-income persons, 4) the unavailability of code standard housing, both rental and homeownership for elderly and disabled, 5) low- to moderate-income persons are un-banked or under-banked and do not understand the need for good credit ratings, 6) the lack of credit worthy low and moderate-income families limit their opportunities to purchase affordable housing and to participate in downpayment assistance programs, and 7) housing to accommodate the needs of persons with HIV/AIDS is virtually non-existent; most property owners have a fear of renting to a person with AIDS. None of these impediments to fair housing choice or affordable housing have been created by a public policy. Many of these impediments can, however, be addressed through proper planning and implementation of the CDBG and HOME Program activities described herein.

MA-45 Non-Housing Community Development Assets

Economic Development Market Analysis

Business Activity

Business by Sector	Number of Workers	Number of Jobs	Total Workers	Total Jobs	Share of Workers	Share of Jobs	Jobs less workers
Agriculture, Mining, Oil & Gas Extraction	116	8	0	0	0	0	0
Construction	1,424	987	0	0	6	4	-2
Manufacturing	2,571	988	0	0	11	4	-7
Wholesale Trade	665	1,106	0	0	3	4	1
Retail Trade	3,380	4,570	0	0	14	19	5
Transportation and Warehousing	766	284	0	0	3	1	-2
Information	307	430	0	0	1	2	1
Finance, Insurance, and Real Estate	1,192	1,976	0	0	5	8	3
Professional, Scientific, Management Services	1,539	631	0	0	7	3	-4
Education and Health Care Services	5,919	8,863	0	0	25	36	11
Arts, Entertainment, Accommodations	3,762	2,580	0	0	16	10	-6
Other Services	1,031	857	0	0	4	3	-1
Public Administration	888	1,349	0	0	4	5	1
Total	23,560	24,629	0	0	99	99	0

Table 39 - Business Activity

Data Source: 2005-2009 ACS (Workers), 2010 ESRI Business Analyst Package (Jobs)

Labor Force

Total Population in the Civilian Labor Force	26,184
Civilian Employed Population 16 years and over	23,560
Unemployment Rate	10.02
Unemployment Rate for Ages 16-24	38.24
Unemployment Rate for Ages 25-65	5.36

Table 40 - Labor Force

Data Source: 2005-2009 ACS Data

Occupations by Sector

Management, business and financial	7,251
Farming, fisheries and forestry occupations	41
Service	4,923
Sales and office	6,269
Construction, extraction, maintenance and repair	1,751
Production, transportation and material moving	3,325

Table 41 – Occupations by Sector

Data Source: 2005-2009 ACS Data

Travel Time

Travel Time	Number	Percentage
< 30 Minutes	19,224	84%
30-59 Minutes	2,874	13%
60 or More Minutes	729	3%
Total	***22,827***	***100%***

Table 42 - Travel Time

Data Source: 2005-2009 ACS Data

Education:

Educational Attainment by Employment Status (Population 16 and Older)

Educational Attainment	In Labor Force		
	Civilian Employed	Unemployed	Not in Labor Force
Less than high school graduate	1,305	164	998
High school graduate (includes equivalency)	2,928	489	1,265

Educational Attainment	In Labor Force		
	Civilian Employed	Unemployed	Not in Labor Force
Some college or Associate's degree	4,827	213	1,619
Bachelor's degree or higher	5,494	263	986

Table 43 - Educational Attainment by Employment Status

Data Source: 2005-2009 ACS Data

Educational Attainment by Age

	Age				
	18–24 yrs	25–34 yrs	35–44 yrs	45–65 yrs	65+ yrs
Less than 9th grade	262	272	144	428	706
9th to 12th grade, no diploma	1,129	414	343	866	710
High school graduate, GED, or alternative	3,022	1,651	1,177	1,987	1,360
Some college, no degree	7,328	1,480	1,272	2,335	970
Associate's degree	1,077	732	566	606	201
Bachelor's degree	1,324	1,507	841	1,545	770
Graduate or professional degree	117	990	706	1,194	809

Table 44 - Educational Attainment by Age

Data Source: 2005-2009 ACS Data

Educational Attainment – Median Earnings in the Past 12 Months

Educational Attainment	Median Earnings in the Past 12 Months
Less than high school graduate	12,952
High school graduate (includes equivalency)	17,798
Some college or Associate's degree	23,365
Bachelor's degree	30,200
Graduate or professional degree	39,766

Table 45 – Median Earnings in the Past 12 Months

Data Source: 2005-2009 ACS Data

Based on the Business Activity table above, what are the major employment sectors within your jurisdiction?

The largest employment sectors in the City of Hattiesburg are, starting with the largest: Public Administration; Finance, Insurance, and Real Estate; Retail; Construction; and Professional, Scientific, and Management Services.

Describe the workforce and infrastructure needs of the business community:

The City of Hattiesburg has a very diverse economy in that the economic climate of the City is not dependent on the success of any single sector. In terms of workforce, the City benefits from the presence of one public and one private university – The University of Southern Mississippi and William Carey University, respectively – as well as a branch of Pearl River Community College and private trade school, Antonelli College. Although these formal education institutions provide opportunities for individuals to further their education and in some cases, to learn a trade, there are segments of the population that may not be immediately eligible for enrollment, but would benefit from learning a trade. The City, through partnerships with local non-profits, has participated in workforce development efforts geared toward low-income individuals that wish to enter the construction field and for individuals recently released from incarceration and/or rehabilitation facilities that may benefit from employment skills training. The City has also established and implemented a Microenterprise Assistance Program through which small businesses are assisted in part as an effort to create employment opportunities for low-income residents. In terms of infrastructure needs in the business community, the Forrest County Industrial Park is a mature industrial park. To adequately service some of the remainder acreage available, minor upgrades and new extensions need to be made. Identifying new sites for industries to conduct their respective business is an ongoing process to keep the region competitive in site selection location. In that vein, there is a basic need for space/land designated for industrial use. The closer such land/space is to the City of Hattiesburg, the more of a benefit it becomes for the City as a whole, and particularly for the workforce and lower-income (or unemployed) workers that may qualify for employment opportunities at such a facility.

Describe any major changes that may have an economic impact, such as planned local or regional public or private sector investments or initiatives that have affected or may affect job and business growth opportunities during the planning period. Describe any needs for workforce development, business support or infrastructure these changes may create

The Port of Gulfport is undergoing a major expansion project to increase its capacity to handle more containers. Hattiesburg, being approximately 60 miles north, has the ability to see new business growth opportunities. Existing industries within the region are continually making new investments in their respective businesses that is stimulating growth and adding new jobs. Over the past year, there have been a number of investments in this region that have totaled over $700,000,000 and over 1,000 jobs.

How do the skills and education of the current workforce correspond to employment opportunities in the jurisdiction?

A 2010 Pathfinders study showed that this region had 24,700 underemployed workers in various industries within a 40 mile radius and 52,000 with a 60 mile radius. As new employment opportunists continue to flourish in the region, workforce-training programs are available for industries to utilize as a resource to provide their workforce with the necessary skill set needed to achieve the goals of the job.

Describe any current workforce training initiatives, including those supported by Workforce Investment Boards, community colleges and other organizations. Describe how these efforts will support the jurisdiction's Consolidated Plan

The Pine Belt region is home to a wide variety of entities that provide the best business models in workforce education and training through various state, federal, and community development programs. From adult education to specially designed programs for targeted business and industry, workforce development is vital to ensuring the academic, occupational and continuing education needs of the workforce and employers are met. This concept allows us an opportunity to facilitate the building of a strong workforce for the great and ever-changing needs of our business and industry community. Pearl River Community College's Lowery A. Woodall Advanced Technology Center provides computer classes, a workkeys service center, and adult learning classes; The WIN Job Center combines state, federal, and community development programs in easily accessible, one-stop service centers. These centers offer a variety of services in areas of unemployment insurance assistance, education, training, human services, and employment, and are networked throughout the state of Mississippi; Jones County Junior College's Advanced Technology Center provides Workforce Development, Adult Education, and has a Small Business Development Center.

Does your jurisdiction participate in a Comprehensive Economic Development Strategy (CEDS)?

Yes

If so, what economic development initiatives are you undertaking that may be coordinated with the Consolidated Plan? If not, describe other local/regional plans or initiatives that impact economic growth.

Yes, the area falls in the South Mississippi Planning Development District and is a part of their regional growth strategy. In addition to SMPDD, the Area Development Partnership outlines goals and objectives on a 5 years basis, with updates and adjustments annually. The goals and objectives are based on assessments to best increase economic development activity in the region.

MA-50 Needs and Market Analysis Discussion

Are there any populations or households in areas or neighborhoods that are more affected by multiple housing problems?

The City's Housing Rehabilitation, Repair, and Reconstruction Program has historically addressed more homes in Wards 2 and 5 than in any other areas of the City. The vast majority rehabilitation and repair projects that are taken on involve the correction of more than one housing problem, and homes that are reconstructed are done so when the cost of addressing all rehabilitation needs are prohibitively costly. Although this data does not definitively support the claim that households with multiple housing problems are concentrated in Wards 2 and 5, it can be inferred that such is the case.

Are there areas in the Jurisdiction where these populations are concentrated?

A comparison of a map showing minority concentrations in the City of Hattiesburg and a map showing the concentration of low-income households in the City reveal glaring similarities. Particular areas (but certainly not all areas) of Wards 2, 4, and 5 are identified as low-income areas, which also may be considered "majority-minority" areas in that black/African-American population is significantly higher than white population. For this purpose, "concentration" refers only to actual presence/residence and does not refer to a particular threshold.

What are the characteristics of the market in these areas/neighborhoods?

Neighborhoods with high concentrations of households with multiple housing problems are typically located in areas where low-income residents are concentrated. Characteristics of such neighborhoods may include vacant, blighted housing, vacant lots where demolition activities previously took place, and occupied homes - either owner-occupied or rented - that may be in deteriorating condition. As can be expected, some of the deteriorating conditions are not unnoticed by the occupants, but the owners may not have the financial resources or the skills necessary to correct maintenance issues.

Are there any community assets in these areas/neighborhoods?

Seemingly, every neighborhood in the City has assets that could be utilized in community development efforts. Some neighborhoods have parks where neighborhood gatherings and events could be held; some neighborhoods have schools or former school buildings that could be used as community centers, used by non-profits for programs, or converted into multi-unit housing facilities; some neighborhoods have vacant land or lots that could be converted into recreational open space, parks, or community gardens. Several neighborhoods - even some that appear purely residential - have nearby neighborhood businesses and/or land that is zoned (or could become zoned) for particular business uses that would support neighborhood businesses.

Are there other strategic opportunities in any of these areas?

See the section above regarding community assets, which relates potential strategic opportunities through the use or leveraging of community assets.

Strategic Plan

SP-05 Overview

Strategic Plan Overview

The City of Hattiesburg's strategy in addressing priority needs over the 2013-2017 Consolidated Plan period will focus largely on Housing, but will also incorporate more intentional efforts to directly impact the homeless, special needs populations, and the agencies that serve them through housing and/or supportive services. The manner through which homeless and special needs populations are served may vary and overlap with other priority needs that the City plans to address, such as Housing, Public Services, Public Facility Improvement, and potentially even Infrastructure Improvement and Economic Development efforts.

Regarding housing priorities, the Housing Rehabilitation and Repair Program will continue to address code compliant affordable housing and safety of residents. The Downpayment Assistance Program will continue to offer advantages to low/mod first time homebuyers. The City will also on a case-by-case basis consider acquisition opportunities for the purpose of furthering affordable housing, emergency shelter, transitional housing, and permanent housing. Demolition of vacant, dilapidated houses will continue to be a focus of the City's attention in the planning period, as removal blighted properties that are beyond opportunity for repair serves a multitude of purposes in community development. As a second tier among housing activities, the City may undertake Rental Rehabilitation and/or TBRA programming should market conditions influence a shift in priority.

Throughout the public participation process, it was apparent that there is an overwhelming need to address issues of homelessness and populations with a variety of special needs and to support the agencies that serve these groups. Support from the City in the Consolidated Plan period will include efforts through Public Service grants, and where appropriate, through Public Facility Improvements, housing services, and the creation of housing targeted toward the homeless and their families, and households with special needs.

The City will also consider activities impacting low/mod neighborhoods and households in general with Public Facility Improvements, Public Services, Infrastructure, Economic Development, and Commercial Rehabilitation. As a matter of strategic planning, the City has also included Urgent Needs as a priority within this plan, which may take on many forms in terms of activities should the need arise. This City of Hattiesburg, having lived through natural disasters and threats of natural disasters, recognizes the prudence in including Urgent Needs in the Consolidated Plan in order to be afforded flexibility in shifting priorities to critical needs in the aftermath of a potential disaster.

SP-10 Geographic Priorities

Geographic Area

General Allocation Priorities

Describe the basis for allocating investments geographically

In general, it has not been the City's practice to target investments geographically. While there are certain activities that are only allowed to take place in low- to moderate-areas (LMA activities), activities that benefit specific low- or moderate-income household(s) (LMH or LMC) may take place anywhere, Citywide. While activities that meet LMH or LMC objectives are more flexible in terms of geographic requirement, in recent years, activities that the City has undertaken with these objectives happen to have been located in low/mod areas almost exclusively. The majority of activities undertaken by the City and its partner agencies are located in Census Tracts 001, 002, 003, 004, 005, 006, 011, and 105.

Minimally, the City does target funds designated for its Façade Improvement Program to commercial buildings in and immediately surrounding the City's downtown area. A smaller version of the Façade Program was piloted in 2012 to target the commercial corridors that lead to downtown. The basis for these activities is to eliminate slum and blight, to rehabilitate commercial structures, and to indirectly promote investment, preservation, and economic development in downtown and the surrounding commercial corridors.

The City has also entered subrecipient agreements with housing repair organizations that identified particular areas of need in which to target investment as they addressed code issues and substandard housing. The City did not require this implementation method, but recognizes the value in its intended impact.

SP-25 Priority Needs

Priority Needs

Priority Need Name	Priority Level	Population	Goals Addressing
Housing Rehabilitation	High	Extremely Low Low Moderate Large Families Families with Children Elderly	Housing Programs (including Affordable Housing) Homeless and Special Needs Housing Units
Emergency Repair	High	Extremely Low Low Moderate Large Families Families with Children Elderly	Housing Programs (including Affordable Housing) Homeless and Special Needs Housing Units
Demolition	High	Extremely Low Low Moderate	Demolition
Down Payment Assistance	High	Extremely Low Low Moderate Large Families Families with Children Elderly Public Housing Residents	Down Payment Assistance
Acquisition	Low	Extremely Low Low Moderate Middle Large Families Families with Children Elderly Public Housing Residents Chronic Homelessness Individuals Families with Children Mentally Ill Chronic Substance Abuse veterans	Housing Programs (including Affordable Housing) Homeless and Special Needs Housing Units

		Persons with HIV/AIDS Victims of Domestic Violence Unaccompanied Youth Elderly Frail Elderly Persons with Mental Disabilities Persons with Physical Disabilities Persons with Developmental Disabilities Persons with Alcohol or Other Addictions Persons with HIV/AIDS and their Families Victims of Domestic Violence Non-housing Community Development	
Public Facility Improvement	Low	Extremely Low Low Moderate Middle Non-housing Community Development	Public Facility Improvement Homeless and Special Needs Housing Units
Infrastructure	Low	Extremely Low Low Moderate Middle Non-housing Community Development	Infrastructure
Public Services	High	Extremely Low Low Moderate Middle Large Families Families with Children Elderly Public Housing Residents Rural	Public Services

		Chronic Homelessness Individuals Families with Children Mentally Ill Chronic Substance Abuse veterans Persons with HIV/AIDS Victims of Domestic Violence Unaccompanied Youth Elderly Frail Elderly Persons with Mental Disabilities Persons with Physical Disabilities Persons with Developmental Disabilities Persons with Alcohol or Other Addictions Persons with HIV/AIDS and their Families Victims of Domestic Violence	
Housing - Special Needs and/or Homeless	High	Extremely Low Low Moderate Large Families Families with Children Elderly Rural Chronic Homelessness Individuals Families with Children Mentally Ill Chronic Substance Abuse veterans Persons with HIV/AIDS Victims of Domestic Violence Unaccompanied Youth	Public Services Homeless and Special Needs Housing Units

		Elderly Frail Elderly Persons with Mental Disabilities Persons with Physical Disabilities Persons with Developmental Disabilities Persons with Alcohol or Other Addictions Persons with HIV/AIDS and their Families Victims of Domestic Violence	
Microenterprise Assistance	Low	Extremely Low Low Moderate Non-housing Community Development	Economic Development
Commercial Rehab - Facade Improvement	Low	Non-housing Community Development	Commercial Rehabilitation
Rental Rehabilitation	Low	Extremely Low Low Moderate Large Families Families with Children Elderly	Housing Programs (including Affordable Housing) Homeless and Special Needs Housing Units
Economic Development - Neighborhoods	Low	Extremely Low Low Moderate Middle Large Families Families with Children Elderly Public Housing Residents Non-housing Community Development	Economic Development Commercial Rehabilitation
TBRA	Low	Extremely Low Low Large Families Families with Children	Housing Programs (including Affordable Housing)

		Elderly Public Housing Residents	
Urgent Needs	Low	Extremely Low Low Moderate Middle Large Families Families with Children Elderly Public Housing Residents Non-housing Community Development	

Table 46 – Priority Needs Summary

SP-30 Influence of Market Conditions

Influence of Market Conditions

Affordable Housing Type	Market Characteristics that will influence the use of funds available for housing type
Tenant Based Rental Assistance (TBRA)	At present, the MS Regional Housing Authority No. 8 has stopped issuing section 8 vouchers. Tenant Based Rental Assistance (TBRA) is not a high priority need in the City of Hattiesburg because the Regional Housing Authority administers the program. However, should the problem of need be exacerbated in the coming years because the need for vouchers rises significantly or the Regional Authority's supply of vouchers diminish substantially, the Consolidated Plan's inclusion of TBRA would allow the City to act by establishing a program and including the funding of it in an Action Plan.
TBRA for Non-Homeless Special Needs	The market characteristics that influence the use of funds for TBRA for Non-Homeless Special Needs population would not differ significantly from the characteristics that influence decisions on using funds for TBRA in general. Data supporting a disproportionate and exacerbated need for this population may influence the City to act to establish a program targeted to this population.
New Unit Production	A market analysis by the City's CHDOs or by the City itself must indicate the need and demand for production of new housing units. The existing housing stock and presence of vacant housing and houses currently on the market present ample opportunity for organizations to bring affordable housing units on line without building new homes. Construction in planned, mixed-income, mixed-use developments may be considered favorably, but the need for a market analysis is not waived.
Rehabilitation	Historically, the largest program by funding allocation that the City administers is homeowner-occupied Rehabilitation. Typically, this program is the greatest priority as the most often defined need. Characteristics that influence the use of funds in this housing type may depend on pressing needs that arise in other priority need areas, which may reduce funds available for Rehabilitation, and needs that go unaddressed (such as when fewer people are approved for Downpayment Assistance than expected), which may increase the funds available for Rehabilitation.
Acquisition, including preservation	Acquisition by homebuyers (Downpayment Assistance) remains a priority need. Characteristics that influence its funding are largely dependent upon the number of households that apply and are approved for an award. In recent years, the use of the DPA Program has slowed considerably because of the conditions in the housing and finance industries. Improvement in the housing market and a rush of applicants and interest in the program may influence the funding of the program. Acquisition/rehab and Acquisition/construction by the City for use as affordable housing are expected to be done on a very limited, case-by-case basis.

Table 47 – Influence of Market Conditions

SP-35 Anticipated Resources

Anticipated Resources

Program	Source of Funds	Uses of Funds	Expected Amount Available Year 1				Expected Amount Available Reminder of ConPlan $	Narrative Description
			Annual Allocation: $	Program Income: $	Prior Year Resources: $	Total: $		
CDBG	public - federal	Acquisition Admin and Planning Economic Development Housing Public Improvements Public Services	577,023	0	572,000	1,149,023	2,308,092	The Year 1 amount used is the 2012 amount. The expected amount for the remainder of the Con Plan is simply the Year 1 amount multiplied by 4. Also, the Program Income figure is zero, but changes in programming could potentially create Program Income. Prior Year resources listed are an estimate only based on existing resources and an approximation of expenditures to be made between the writing of the Con Plan and the end of the 2012 Program Year.
HOME	public - federal	Acquisition Homebuyer assistance Homeowner rehab Multifamily rental new construction Multifamily	275,957	0	352,000	627,957	1,103,828	The Year 1 amount used is the 2012 amount, which was significantly lower than the 2011 amount. Hopefully actual funding will be similar to pre-2011 funding. The expected amount for the remainder of the Con Plan is simply the Year 1 amount multiplied by 4. Also, the Program Income figure is zero, but changes in programming could potentially create Program Income.

Program	Source of Funds	Uses of Funds	Expected Amount Available Year 1				Expected Amount Available Reminder of ConPlan $	Narrative Description
			Annual Allocation: $	Program Income: $	Prior Year Resources: $	Total: $		
		rental rehab New construction for ownership TBRA						Prior Year resources listed are an estimate only based on existing resources and an approximation of expenditures to be made between the writing of the Con Plan and the end of the 2012 Program Year.

Table 48 - Anticipated Resources

Explain how federal funds will leverage those additional resources (private, state and local funds), including a description of how matching requirements will be satisfied

The City hopes to continue its partnerships through groups such as the Housing Roundtable and the Pinebelt Coalition on Homelessness in a concerted effort to strategically address problems and mutual concerns. As in the past, the City values these and other such partnerships as community partners bring differing resources to the table - funding, volunteers, services, etc. - for mutual benefit. The City will also continue to seek out funding opportunities such as those available for housing activities through the Federal Home Loan Bank, the Mississippi Development Authority, and funding opportunities such as those generously provided in recent years by the Salvation Army. Regarding matching requirements, the City of Hattiesburg does not have a local HOME matching requirement.

If appropriate, describe publically owned land or property located within the jurisdiction that may be used to address the needs identified in the plan

The City has recently utilized its mapping capabilities to identify City and State owned property throughout the City of Hattiesburg. These properties are reviewed periodically when need arises for particular projects, and the City intends to continue this approach of utilizing property already in its inventory (when appropriate) before seeking property to purchase.

SP-40 Institutional Delivery Structure

Explain the institutional structure through which the jurisdiction will carry out its consolidated plan including private industry, non-profit organizations, and public institutions.

Responsible Entity	Responsible Entity Type	Role	Geographic Area Served
	Government	public facilities	Other
	Government	public services	Other
	Government	Economic Development	Other
	Government	Planning	Other
	Government	public facilities	Other
	Government	neighborhood improvements	Other
	Government	public services	Other
	Government	Economic Development	Other
	Government	Planning	Other
HOUSING ALTERNATIVES OF HATTIESBURG	CHDO	Ownership	Jurisdiction
	Government	public facilities	Other
	Government	public services	Other
	Government	Economic Development	Other
	Government	Planning	Other
	Non-profit organizations	Non-homeless special needs	Region
	Non-profit organizations	public services	Region
	Non-profit organizations	Economic Development	Region
COMMUNITY CONNECTIONS		Ownership	
COMMUNITY CONNECTIONS		neighborhood improvements	
BREAKTHROUGH COMMUNITY SERVICES	CHDO	Ownership	Jurisdiction
BREAKTHROUGH COMMUNITY SERVICES	CHDO	neighborhood improvements	Jurisdiction

BREAKTHROUGH COMMUNITY SERVICES	CHDO	public services	Jurisdiction
PINE BELT COMMUNITY SERVICES, INC.	CHDO	Ownership	Jurisdiction
PINE BELT COMMUNITY SERVICES, INC.	CHDO	Rental	Jurisdiction
PINE BELT COMMUNITY SERVICES, INC.	CHDO	neighborhood improvements	Jurisdiction
PINE BELT COMMUNITY SERVICES, INC.	CHDO	public services	Jurisdiction
CENTER FOR PREVENTION OF CHILD ABUSE	Non-profit organizations		Region
	Public institution	Ownership	State
	Public institution	Homelessness	State
	Public institution	Non-homeless special needs	State
	Public institution	public services	State
American Red Cross, South Central MS Chapter	Non-profit organizations	Homelessness	Region
R3SM, Inc.	Subrecipient	Ownership	Region
R3SM, Inc.	Subrecipient	neighborhood improvements	Region
United Way of Southeast Mississippi	Non-profit organizations	Non-homeless special needs	Region
United Way of Southeast Mississippi	Non-profit organizations	neighborhood improvements	Region
United Way of Southeast Mississippi	Non-profit organizations	public services	Region
Forrest General Hospital (Pine Grove Behavioral Health & Addiction Services)	Subrecipient	Homelessness	Region
Forrest General Hospital (Pine Grove Behavioral Health & Addiction Services)	Subrecipient	Non-homeless special needs	Region
Forrest General Hospital (Pine Grove Behavioral Health & Addiction	Subrecipient	public services	Region

Services)			
	Non-profit organizations	Homelessness	Region
	Non-profit organizations	Non-homeless special needs	Region
	Non-profit organizations	public facilities	Region
	Non-profit organizations	public services	Region
	Non-profit organizations	Homelessness	Region
	Non-profit organizations	public facilities	Region
	Non-profit organizations	neighborhood improvements	Region
	Non-profit organizations	public services	Region
AIDS Services Coalition	Subrecipient	Homelessness	Jurisdiction
AIDS Services Coalition	Subrecipient	Non-homeless special needs	Jurisdiction
Hattiesburg Area Habitat for Humanity	Subrecipient	Ownership	Region
Southern MS Planning & Development District	Regional organization	Non-homeless special needs	Region
Southern MS Planning & Development District	Regional organization	public services	Region
Southern MS Planning & Development District	Regional organization	Economic Development	Region
Southern MS Planning & Development District	Regional organization	Planning	Region
Hattiesburg Housing Authority	PHA	Rental	Jurisdiction
Hattiesburg Housing Authority	PHA	Public Housing	Jurisdiction
South Mississippi Children's Center	Non-profit organizations	Homelessness	Region
South Mississippi Children's Center	Non-profit organizations	Non-homeless special needs	Region
South Mississippi Children's Center	Non-profit organizations	public services	Region
MS Regional Housing	PHA	Rental	Region

Authority No. 8			
MS Regional Housing Authority No. 8	PHA	Public Housing	Region

Table 49 - Institutional Delivery Structure

Assess of Strengths and Gaps in the Institutional Delivery System

An assessment of the strengths in the Institutional Structure revealed that there is a large number of well-organized agencies committed to addressing the needs of Hattiesburg's low- and moderate-income persons. Hundreds of volunteers support these agencies, and literally thousands of people are served with limited facilities and funding. Most notable among gaps in the Institutional structure are the following:

- The lack of code compliant, affordable rental housing for LMI households
- The difficulty in attaining financing for potential LMI homebuyers
- The lack of programs to assist owners of rental homes to upgrade housing while keeping rents affordable
- The inadequate number of public housing units (which exacerbates the lack of affordable, code compliant housing)
- The need for additional emergency shelter, transitional housing, and permanent housing for homeless individuals and families
- The need for additional supportive services for homeless individuals and families
- The need for additional emergency and transitional housing for homeless persons with HIV/AIDS and their families
- The need for transitional and permanent housing for those with special needs i.e. drug and alcohol, mental illness, etc.
- The need for housing for persons with disabilities
- The need to expand programs to address the needs of youth who suffer from drug and alcohol abuse

Availability of services targeted to homeless persons and persons with HIV and mainstream services

Homelessness Prevention Services	Available in the Community	Targeted to Homeless	Targeted to People with HIV
Homelessness Prevention Services			
Counseling/Advocacy	X	X	
Legal Assistance	X		
Mortgage Assistance	X	X	
Rental Assistance	X	X	
Utilities Assistance	X	X	

Street Outreach Services			
Law Enforcement	X	X	
Mobile Clinics			
Other Street Outreach Services	X	X	
Supportive Services			
Alcohol & Drug Abuse	X	X	
Child Care	X	X	
Education	X	X	X
Employment and Employment Training	X	X	
Healthcare	X	X	X
HIV/AIDS	X	X	X
Life Skills	X	X	X
Mental Health Counseling	X	X	X
Transportation	X	X	X
Other			
		X	

Table 50 - Homeless Prevention Services Summary

Describe how the service delivery system including, but not limited to, the services listed above meet the needs of homeless persons (particularly chronically homeless individuals and families, families with children, veterans and their families, and unaccompanied youth)

The organizations that offer services targeted to homeless persons and persons with HIV/AIDS do not lack for clients to serve. Agencies that serve these populations are in constant need of resources - volunteers (when applicable), funding, facilities, supplies, etc.

Describe the strengths and gaps of the service delivery system for special needs population and persons experiencing homelessness, including, but not limited to, the services listed above

As with the Institutional Structure in general, there is great strength in the fact that the organizations addressing homelessness and special needs are well organized. An additional strength lies in the fact that their missions are similar, yet diverse, in the specific special needs groups that they serve. This list, taken from the list above lists the gaps noted in delivery service.

- The need for additional emergency shelter, transitional housing, and permanent housing for homeless individuals and families
- The need for additional emergency and transitional housing for homeless persons with HIV/AIDS and their families

- The need for transitional and permanent housing for those with special needs i.e. drug and alcohol, mental illness, etc.
- The need for housing for persons with disabilities
- The need to expand programs to address the needs of youth who suffer from drug and alcohol abuse
- The need for additional supportive services for homeless individuals and families

Provide a summary of the strategy for overcoming gaps in the institutional structure and service delivery system for carrying out a strategy to address priority needs

The Consolidated Plan process requires that the City take a proactive role and a collaborative effort in the delivery of housing, supportive housing, and non-housing community development needs in Hattiesburg.

Rehabilitation and Emergency Repair programs to improve existing owner-occupied housing will continue to be the focus of the CDBG and HOME Programs. The City will additionally continue to partner with housing organizations in the arena of affordable housing development. The City will enforce housing codes to bring about improvement of substandard rental properties and will support efforts to improve the properties. The City will also support the Hattiesburg Housing Authority and the Regional Housing Authority in efforts to expand the number of units and Section 8 vouchers available in the City.

The City will continue to support efforts of agencies - particularly those participating in the Pinebelt Coalition to End Homelessness - to increase the availability of emergency, transitional, and permanent housing to accommodate the homeless, and for the expansion of supportive services to address the accompanying needs. The City will continue to support the efforts of agencies providing housing and supportive services to persons with HIV/AIDS and their families and to special needs populations. The City will also continue to support efforts to broaden housing opportunities for the disabled and to make contractors aware of ADA requirements.

The City will support efforts/programs that address the needs of at-risk youth who suffer from drug and alcohol abuse.

SP-45 Goals Summary

Goals Summary Information

Goal Name	Start Year	End Year	Category	Geographic Area	Needs Addressed	Funding	Goal Outcome Indicator
Housing Programs (including Affordable Housing)	2013	2017	Affordable Housing		Housing Rehabilitation Emergency Repair Acquisition Rental Rehabilitation TBRA	CDBG: $858,092 HOME: $1,141,806	Rental units rehabilitated: 2 Household Housing Unit Homeowner Housing Added: 4 Household Housing Unit Homeowner Housing Rehabilitated: 30 Household Housing Unit
Demolition	2013	2017	Demolition		Demolition	CDBG: $250,000	Buildings Demolished: 50 Buildings
Down Payment Assistance	2013	2017	Affordable Housing		Down Payment Assistance	HOME: $100,000	Direct Financial Assistance to Homebuyers: 10 Households Assisted
Public Facility Improvement	2013	2017	Non-Housing Community Development		Public Facility Improvement	CDBG: $100,000	Public Facility or Infrastructure Activities other than Low/Moderate Income Housing Benefit: 500 Persons Assisted Public Facility or Infrastructure Activities for Low/Moderate Income Housing Benefit: 100 Households Assisted

Goal Name	Start Year	End Year	Category	Geographic Area	Needs Addressed	Funding	Goal Outcome Indicator
Infrastructure	2013	2017	Non-Housing Community Development		Infrastructure	CDBG: $250,000	Public Facility or Infrastructure Activities other than Low/Moderate Income Housing Benefit: 1000 Persons Assisted
Public Services	2013	2017	Homeless Non-Homeless Special Needs Non-Housing Community Development		Public Services Housing - Special Needs and/or Homeless	CDBG: $325,000	Public service activities other than Low/Moderate Income Housing Benefit: 1000 Persons Assisted Homeless Person Overnight Shelter: 100 Persons Assisted Homelessness Prevention: 100 Persons Assisted HIV/AIDS Housing Operations: 100 Household Housing Unit
Homeless and Special Needs Housing Units	2013	2017	Affordable Housing Homeless Non-Homeless Special Needs		Housing Rehabilitation Emergency Repair Acquisition Public Facility Improvement Housing - Special Needs and/or Homeless	CDBG: $300,000	Public Facility or Infrastructure Activities for Low/Moderate Income Housing Benefit: 20 Households Assisted Overnight/Emergency Shelter/Transitional Housing Beds added: 50 Beds

Goal Name	Start Year	End Year	Category	Geographic Area	Needs Addressed	Funding	Goal Outcome Indicator
					Rental Rehabilitation		Housing for Homeless added: 20 Household Housing Unit Housing for People with HIV/AIDS added: 20 Household Housing Unit
Economic Development	2013	2017	Non-Housing Community Development		Microenterprise Assistance Economic Development - Neighborhoods	CDBG: $150,000	Jobs created/retained: 10 Jobs Businesses assisted: 10 Businesses Assisted
Commercial Rehabilitation	2013	2017	Non-Housing Community Development		Commercial Rehab - Facade Improvement Economic Development - Neighborhoods	CDBG: $75,000	Facade treatment/business building rehabilitation: 5 Business

Table 51 – Goals Summary

Estimate the number of extremely low-income, low-income, and moderate-income families to whom the jurisdiction will provide affordable housing as defined by HOME 91.315(b)(2)

The City's outlined goals are estimated to serve the following through affordable housing activities:

Extremely Low-Income households - 172

- 10 Homeowner Rehabilitation activities

- 2 potential Rental Rehabilitation activities
- 100 households that could benefit from Public Facility activities geared toward housing
- 60 homeless or special needs households that could benefit from targeted activities

Low-Income households - 14

- 10 Homeowner Rehabilitation activities
- 4 Down Payment Assistance Awards

Moderate-Income households - 20

- 10 Homeowner Rehabilitation activities
- 6 Down Payment Assistance Awards
- 4 Newly Constructed Affordable Houses (homebuyer)

SP-50 Public Housing Accessibility and Involvement

Need to Increase the Number of Accessible Units (if Required by a Section 504 Voluntary Compliance Agreement)

The Hattiesburg Housing Authority complies with Section 504; there is no requirement to increase accessible units.

Activities to Increase Resident Involvements

The Hattiesburg Housing Authority conducts monthly resident meetings at each site. Monthly meetings follow different themes with guest speakers from varying organizations such as the city, the school district, the Red Cross, Emergency Management, etc. The Housing Authority also invites community civic organizations to attend monthly resident meetings, and encourages their interaction with residents. Annually, each site also participates in the National Night Out Against Crime.

Is the public housing agency designated as troubled under 24 CFR part 902?

No

Plan to remove the 'troubled' designation

n/a

SP-55 Barriers to affordable housing

Barriers to Affordable Housing

The City's zoning ordinance and related regulations are conducive to affordable housing development. As public policies are concerned, the only notable barrier to affordable housing has to do with development in flood zones where FEMA regulations create limitations on the value/cost of rehabilitation that can take place on existing structures. Historically, new affordable housing has not been created in flood zones when using CDBG or HOME funds because of the challenges of meeting the development requirements. The City will make it known to partner agencies and CHDOs that such new developments are possible given compliance with certain development and insurance requirements.

In 2012, the City completed an Analysis of Impediments to Fair Housing Choice. Impediments/challenges identified include 1) a lack of fair housing education, 2) the unavailability of code standard affordable housing for homeownership, 3) the unavailability of code standard housing, both rental and homeownership for low- to moderate-income persons, 4) the unavailability of code standard housing, both rental and homeownership for elderly and disabled, 5) low- to moderate-income persons are un-banked or under-banked and do not understand the need for good credit ratings, 6) the lack of credit worthy low and moderate-income families limit their opportunities to purchase affordable housing and to participate in downpayment assistance programs, and 7) housing to accommodate the needs of persons with HIV/AIDS is virtually non-existent; most property owners have a fear of renting to a person with AIDS. None of these impediments to fair housing choice or affordable housing have been created by a public policy. Many of these impediments can, however, be addressed through proper planning and implementation of the CDBG and HOME Program activities described herein.

Strategy to Remove or Ameliorate the Barriers to Affordable Housing

Hattiesburg has historically supported efforts to meet housing needs of its citizens and has been proactive in the provision of housing to its low- and moderate-income residents. In the 1938-1939 timeframe, the City created one of the first housing authorities in the State of Mississippi. The City supported the creation of the Mississippi Regional Housing Authority No. VIII and its efforts to bring Section 8 assistance to the City residents.

The Official Zoning Ordinance and Subdivision Regulations make provisions for affordable housing and provide protection to citizens by ensuring proper land use and high quality residential land development.

The City continues to implement housing rehabilitation programs to upgrade owner-occupied housing. Through its three CHDOs, the City of Hattiesburg is supporting affordable housing initiatives providing for the construction of new affordable housing and homebuyer down-payment assistance programs. These activities serve to reduce affordable housing barriers. The City has also partnered with service providers in areas of adult financial literacy, jobs training, and employability skills training - all of which address barriers individuals may have in attaining affordable housing. The City will continue to support such programs - most likely through Public Service grants.

SP-60 Homelessness Strategy

Reaching out to homeless persons (especially unsheltered persons) and assessing their individual needs

The City of Hattiesburg actively participates in meetings of the Pinebelt Coalition on Homelessness and supports the efforts of individual organizations whose mission is to serve homeless populations. The City intends to continue this collaboration in the planning period, and intends to increase efforts in serving the homeless community by way of funding supportive services offered by appropriate agencies. Direct support will most likely come by way of Public Service grants. The City also intends to support these agencies in attaining funding for additional emergency and transitional shelter.

Addressing the emergency and transitional housing needs of homeless persons

As previously stated, the City intends to continue its collaboration with organizations whose missions include services and housing for homeless persons. The City will support these agencies in competing for and attaining funding for additional emergency and transitional shelter, and may, as funding allows, consider opportunities to support new sustainable programs for emergency and/or transitional housing. More direct support for these housing needs will likely come through Public Facility Improvement activities.

Helping homeless persons (especially chronically homeless individuals and families, families with children, veterans and their families, and unaccompanied youth) make the transition to permanent housing and independent living, including shortening the period of time that individuals and families experience homelessness, facilitating access for homeless individuals and families to affordable housing units, and preventing individuals and families who were recently homeless from becoming homeless again.

The City of Hattiesburg's partner agencies in the field of homelessness and special needs clients are well organized and maintain close working relationships. The City also facilitates a Housing Roundtable – an organization focused on a variety of housing concerns in Hattiesburg. Though the two coalitions differ somewhat in purpose, there is a great deal of overlap in both subject matter and membership. The City's intended (continued) support of the agencies within both groups are an opportunity to address transition to independent living, affordable housing, and ensuring appropriate case management, as the organizations have already proven capable of doing.

Help low-income individuals and families avoid becoming homeless, especially extremely low-income individuals and families who are likely to become homeless after being discharged from a publicly funded institution or system of care, or who are

receiving assistance from public and private agencies that address housing, health, social services, employment, education or youth needs

The City has recently supported financial literacy programs, utility assistance programs, and job/skills training programs with CDBG assistance. Forrest General Hospital has a process for identifying homeless persons and persons with substance abuse problems that may require certain case management or supportive service resources, and there is a well-organized process by which people are referred to appropriate agencies that may be able to assist. The City intends to support activities – likely through Public Service grants – that will assist all manners of homelessness, including the prevention thereof.

SP-65 Lead based paint Hazards

Actions to address LBP hazards and increase access to housing without LBP hazards

All activities undertaken by the City of Hattiesburg with CDBG or HOME funds are done in accordance with 24 CFR Part 35, which dictates the assessment and abatement requirements that accompany certain activities. Rehabilitation projects to exceed $25,000 in cost that contain LBP hazards are abated. Subrecipients and CHDOs that perform activities with HUD funding are required to follow the same requirements, and the City monitors such activities to ensure compliance. In addition to the abatement done as a part of rehabilitation activities, the City participates in housing fairs (as/when invited) sponsored by other housing agencies such as the USM Institute for Disability Studies and make presentations related to LBP hazards. The City has included as a potential activity, the identification of LBP hazards as a stand-alone housing activity. The City may also undertake the screening for lead poisoning as a Public Service should the Mississippi Department of Health dictate such a need.

How are the actions listed above related to the extent of lead poisoning and hazards?

The City of Hattiesburg has a significantly aging housing stock, with the oldest of the homes in the City distributed in concentration similar to the concentration of low-income households. The City has placed an emphasis on housing rehabilitation to improve the housing stock, save deteriorating homes, improve the lives of the homeowners, and improve the community around low-income households; in accomplishing goals in this priority area, the City is also addressing lead based paint hazards. The extent of the LBP hazards are likely higher than the extent (in sheer numbers) of homes needing rehabilitation, but the overall impact on quality of life – both immediate and lasting – of rehabilitating homes is higher than the impact that simply identifying and/or abating LBP hazards would have.

How are the actions listed above integrated into housing policies and procedures?

The environmental review process for any CDBG or HOME funded activity will dictate – according to 24 CF R Part 35 – the procedure that must be followed prior to officially committing to a project.

SP-70 Anti-Poverty Strategy

Jurisdiction Goals, Programs and Policies for reducing the number of Poverty-Level Families

Through CDBG Public Service grants, the City has partnered with subrecipients for purposes and programs such as adult financial literacy, utility assistance, jobs training, and employability skills training; through Microenterprise Assistance Awards, the City has supported job creation. Additionally, the Community Development Division has participated in the creation of a Bank On Hattiesburg Program to educate the un-banked and under-banked population in hopes that they may better understand how banking works and steer clear of predatory lending institutions. Public Service activities, Microenterprise activities, and the Bank On program are all activities that the City intends to carry out in the coming period.

How are the Jurisdiction poverty reducing goals, programs, and policies coordinated with this affordable housing plan

The City recognizes the value of homeownership, but also recognizes the challenges that face lower-income households in achieving homeownership. As such, the City intends to continue to support efforts such as financial literacy, utility assistance, jobs training, employability skills training, Bank On, Microenterprise development, and other economic development activities, because through efforts like these, lower-income individuals and families can be afforded a hand-up and potential catalyst to help them out of poverty, toward financial independence, and possibly toward homeownership. The City also intends to continue partnerships with affordable housing agencies such as Hattiesburg Area habitat for Humanity that offers more than a home for sale, but also individualized case management and support that is something typical mortgage lending institutions may not be capable of offering.

SP-80 Monitoring

Describe the standards and procedures that the jurisdiction will use to monitor activities carried out in furtherance of the plan and will use to ensure long-term compliance with requirements of the programs involved, including minority business outreach and the comprehensive planning requirements

It is the City's policy to monitor all subrecipients – Public Service providers, Microenterprise award recipients, Emergency Repair agencies, Rehabilitation agencies, and CHDOs on an annual basis. On a case-by-case basis, the simplicity of an agreement and the scope of services may only justify a desk monitoring of documents, but most agreements/agencies will be monitored on site annually. Monitoring will ensure compliance with federal, state, and local law as well as adherence to the performance expectations contracted in the agreement. The City's Community Development Division staff will monitor its own performance in the course of creating the annual Consolidated Annual Performance & Evaluation Report, and will reflect on the outcomes, achievements, and shortcomings in the creation of each year's Annual Action Plan.

Minority Business Outreach

The City of Hattiesburg engages in outreach to minority and women-owned businesses through strategic partnerships with other organizations at the state and local levels. Beginning in 2009, and most recently in 2011, the City partnered with the Mississippi Development Authority to host a Model Contractor Development Workshop. This workshop targeted disadvantaged businesses and covered a range of topics including but not limited to business structure, business accounting, business finance, bonding and developing proposal/bids. In 2012, the City partnered with MDOT to sponsor a "Meet-the-Prime" event for DBE contractors to network with larger contractors in the state and find out about subcontracting opportunities. The city continues to partner with the Area Development Partnership (a regional economic development organization) in an effort to identify disadvantaged businesses and develop services and programs to increase capacity. The ADP maintains a Minority Business Directory and targets these businesses with its loan programs and other support services.

Also, during the 2011 program the City sponsored a Section 3 meeting with Kansas City Southern Railroad and various minority contractors aimed at identifying potential contractors for its rail improvement project. It should be noted that this project is funded by a HUD TIGER grant. The City's Community Development Division also maintains a Section 3 registry as a part of its Section 3 Plan.

For the purposes of both CDBG and HOME rehabilitation and reconstruction, the City develops a list of Qualified Eligible Contractors (QEC). Of the six contractors on the 2011 QEC, five were minority-owned business. All of the City's solicitations are placed on the Small Business Development Center's website which provides an additional mechanism through which DBEs can be reached.

The City will continue these strategic partnerships aimed ensuring the participation of DBEs and benefiting Section 3 businesses and individuals through the 2013-2017-plan period.

Expected Resources

AP-15 Expected Resources

Anticipated Resources

Program	Source of Funds	Uses of Funds	Expected Amount Available Year 1				Expected Amount Available Reminder of ConPlan $	Narrative Description
			Annual Allocation: $	Program Income: $	Prior Year Resources: $	Total: $		
CDBG	public - federal	Acquisition Admin and Planning Economic Development Housing Public Improvements Public Services	577,023	0	572,000	1,149,023	2,308,092	The Year 1 amount used is the 2012 amount. The expected amount for the remainder of the Con Plan is simply the Year 1 amount multiplied by 4. Also, the Program Income figure is zero, but changes in programming could potentially create Program Income. Prior Year resources listed are an estimate only based on existing resources and an approximation of expenditures to be made between the writing of the Con Plan and the end of the 2012 Program Year.
HOME	public - federal	Acquisition Homebuyer assistance Homeowner rehab Multifamily	275,957	0	352,000	627,957	1,103,828	The Year 1 amount used is the 2012 amount, which was significantly lower than the 2011 amount. Hopefully actual funding will be similar to pre-2011 funding. The expected amount for the remainder of the Con Plan is simply the Year 1 amount

Program	Source of Funds	Uses of Funds	Expected Amount Available Year 1				Expected Amount Available Reminder of ConPlan $	Narrative Description
			Annual Allocation: $	Program Income: $	Prior Year Resources: $	Total: $		
		rental new construction Multifamily rental rehab New construction for ownership TBRA						multiplied by 4. Also, the Program Income figure is zero, but changes in programming could potentially create Program Income. Prior Year resources listed are an estimate only based on existing resources and an approximation of expenditures to be made between the writing of the Con Plan and the end of the 2012 Program Year.

Table 52 - Expected Resources – Priority Table

Explain how federal funds will leverage those additional resources (private, state and local funds), including a description of how matching requirements will be satisfied

The City hopes to continue its partnerships through groups such as the Housing Roundtable and the Pinebelt Coalition on Homelessness in a concerted effort to strategically address problems and mutual concerns. As in the past, the City values these and other such partnerships as community partners bring differing resources to the table - funding, volunteers, services, etc. - for mutual benefit. The City will also continue to seek out funding opportunities such as those available for housing activities through the Federal Home Loan Bank, the Mississippi Development Authority, and funding opportunities such as those generously provided in recent years by the Salvation Army. Regarding matching requirements, the City of Hattiesburg does not have a local HOME matching requirement.

If appropriate, describe publically owned land or property located within the jurisdiction that may be used to address the needs identified in the plan

The City has recently utilized its mapping capabilities to identify City and State owned property throughout the City of Hattiesburg. These

properties are reviewed periodically when need arises for particular projects, and the City intends to continue this approach of utilizing property already in its inventory (when appropriate) before seeking property to purchase.

Annual Goals and Objectives

AP-20 Annual Goals and Objectives

Goals Summary Information

Goal Name	Start Year	End Year	Category	Geographic Area	Needs Addressed	Funding	Goal Outcome Indicator
Housing Programs (including Affordable Housing)	2013	2017	Affordable Housing		Housing Rehabilitation Emergency Repair Acquisition	CDBG: $121,619 HOME: $208,362	Homeowner Housing Added: 1 Household Housing Unit Homeowner Housing Rehabilitated: 4 Household Housing Unit
Demolition	2013	2017	Demolition		Demolition	CDBG: $50,000	Buildings Demolished: 10 Buildings
Down Payment Assistance	2013	2017	Affordable Housing		Down Payment Assistance Acquisition	HOME: $40,000	Direct Financial Assistance to Homebuyers: 4 Households Assisted
Public Services	2013	2017	Homeless Non-Homeless Special Needs Non-Housing Community Development		Public Services	CDBG: $60,000	Public service activities other than Low/Moderate Income Housing Benefit: 200 Persons Assisted Homeless Person Overnight Shelter: 20 Persons Assisted Homelessness Prevention: 20 Persons Assisted HIV/AIDS Housing Operations: 20 Household Housing Unit
Homeless and Special Needs Housing Units	2013	2017	Affordable Housing Homeless		Housing Rehabilitation Acquisition	CDBG: $200,000	Public Facility or Infrastructure Activities for Low/Moderate Income Housing Benefit: 15 Households

Goal Name	Start Year	End Year	Category	Geographic Area	Needs Addressed	Funding	Goal Outcome Indicator
			Non-Homeless Special Needs		Public Facility Improvement Housing - Special Needs and/or Homeless Rental Rehabilitation		Assisted Overnight/Emergency Shelter/Transitional Housing Beds added: 33 Beds Housing for Homeless added: 15 Household Housing Unit Housing for People with HIV/AIDS added: 15 Household Housing Unit
Economic Development	2013	2017	Non-Housing Community Development		Microenterprise Assistance	CDBG: $30,000	Jobs created/retained: 2 Jobs Businesses assisted: 2 Businesses Assisted

Table 53 – Goals Summary

Projects

AP-38 Project Summary

Project Summary Information

Project Name	Target Area	Goals Supported	Needs Addressed	Funding
CDBG Administration		Housing Programs (including Affordable Housing) Demolition Down Payment Assistance Public Services Economic Development	Housing Rehabilitation Emergency Repair Demolition Down Payment Assistance Acquisition Public Facility Improvement Infrastructure Public Services Housing - Special Needs and/or Homeless Microenterprise Assistance Commercial Rehab - Facade Improvement Rental Rehabilitation Economic Development - Neighborhoods TBRA Urgent Needs	CDBG: $115,404
CDBG Housing Programs		Housing Programs (including Affordable Housing) Demolition Down Payment Assistance	Housing Rehabilitation Emergency Repair Demolition Down Payment Assistance	CDBG: $121,619

			Acquisition Housing - Special Needs and/or Homeless Rental Rehabilitation	
CDBG Demolition		Demolition	Demolition	CDBG: $50,000
CDBG Public Services		Public Services	Public Services	CDBG: $60,000
CDBG Microenterprise Assistance		Economic Development	Microenterprise Assistance	CDBG: $30,000
HOME Administration		Housing Programs (including Affordable Housing) Down Payment Assistance	Housing Rehabilitation Down Payment Assistance Rental Rehabilitation TBRA	HOME: $27,596
HOME Housing Programs		Housing Programs (including Affordable Housing)	Housing Rehabilitation Acquisition	HOME: $208,362
HOME Down Payment Assistance		Down Payment Assistance	Down Payment Assistance	HOME: $40,000
CDBG Homeless and Special Needs Housing Units		Housing Programs (including Affordable Housing) Homeless and Special Needs Housing Units	Housing Rehabilitation Acquisition Public Facility Improvement Housing - Special Needs and/or Homeless Rental Rehabilitation	CDBG: $200,000

Table 54 – Project Summary

AP-35 Projects

Introduction

The following is a listing of projects that the City of Hattiesburg proposes to undertake using CDBG and HOME funds anticipated for 2013.

#	Project Name
1	CDBG Administration
2	CDBG Housing Programs
3	CDBG Demolition
4	CDBG Public Services
5	CDBG Microenterprise Assistance
6	HOME Administration
7	HOME Housing Programs
8	HOME Down Payment Assistance
9	CDBG Homeless and Special Needs Housing Units

Table 55 – Project Information

Describe the reasons for allocation priorities and any obstacles to addressing underserved needs

The allocation of funding is in keeping with the priority needs identified in the Consolidated Plan. Housing issues - rehabilitation, code compliance, demolition, affordability - being the greatest priority identified, it is allocated the greatest amount of funding. The second greatest need identified being related to homelessness and special needs populations, the City intends to address those needs through its Public Service grants and internal activities.

AP-50 Geographic Distribution

Description of the geographic areas of the entitlement (including areas of low-income and minority concentration) where assistance will be directed

With the exception of the Facade Improvement Program, none of the activities proposed for the 2013 Action Plan are directed geographically, meaning that there is not a prescribed area in which these activities are required to take place. Microenterprise Assistance, Housing Rehabilitation, Emergency Repair, Demolition, Down Payment Assistance, and other Affordable Housing activities are allowable Citywide. However, these activities have historically taken place in areas of low-income and minority concentration. Such areas include the greater portion of Wards 2, 4, and 5, which are better identified by U.S. Census tracts 001, 002, 003, 004, 005, 006, 011, and 105. Public Service grants are likewise, not directed geographically, but tend to be centered in low-income areas by virtue of the clients that the agencies serve. The Facade Improvement Program is directed to the downtown area as a program policy in an effort to continue the revitalization of the historic downtown.

Geographic Distribution

Target Area	Percentage of Funds

Table 56 - Geographic Distribution

Rationale for the priorities for allocating investments geographically

The only activity/priority that is geographically driven in the 2013 Action Plan is the Facade Improvement Program, which is focused by program policy on the downtown area in an effort to continue the revitalization of the historic downtown. It is possible that procedures may change in the future regarding the approach taken to address housing rehabilitation, which could allow for a geographic focus. Such a focus would be based on findings of concentrations of need in low-income areas and/or based on a concerted effort by the City and/or partner agencies to create an impact on a particular neighborhood or area.

Affordable Housing

AP-55 Affordable Housing

One Year Goals for the Number of Households to be Supported	
Homeless	68
Non-Homeless	239
Special-Needs	35
Total	342

Table 57 - One Year Goals for Affordable Housing by Support Requirement

One Year Goals for the Number of Households Supported Through	
Rental Assistance	0
The Production of New Units	1
Rehab of Existing Units	4
Acquisition of Existing Units	82
Total	87

Table 58 - One Year Goals for Affordable Housing by Support Type

Discussion

The figures provided above are taken from the total goals from all activities/projects anticipated within the 2013 Action Plan with the exception of Administrative activities, Demolition activities, and Economic Development Activities. To a large degree, the goals for each category of household or housing project type are unknown because they will vary depending on the type of Public Service projects undertaken and the number and type of projects undertaken to address Homeless & Special Needs Housing. The numbers above are a tabulation of each type as listed in the goals outlined earlier in the Action Plan.

As an example, "Acquisition of Existing Units" has a goal of 82, which is a tabulation of (4) proposed Down Payment Assistance acquisitions and the goals outlined for Homeless & Special Needs Housing (15 Households Assisted through low/mod housing, 33 transitional/emergency shelter beds created, 15 Housing Units for Homeless persons, and 15 Housing Units for people living with HIV/AIDS). These are all listed under "Acquisition of Existing Units," but may just as likely occur under "Rehab of Existing Units" or "Production of New Units," depending upon projects proposed. Additionally, the proportion of Homeless, HIV, Transitional, Emergency Shelter, etc. that make up a proposed project will dictate how/where accomplishments are reported. Different facility types having different services, policies, and turnover percentages, will additionally alter the outcome.

AP-60 Public Housing

Introduction

The Hattiesburg Housing Authority manages 296 Public Housing units in the City of Hattiesburg.

Actions planned during the next year to address the needs to public housing

The City of Hattiesburg stands ready to support the Hattiesburg Housing Authority in any way possible, particularly as the HHA seeks to replace many of its older units in the coming years.

Actions to encourage public housing residents to become more involved in management and participate in homeownership

The Housing Authority will continue to host monthly resident meetings at each of its developments to engage its residents. Guest speakers will be scheduled as appropriate to bring residents valuable information related to the City, the schools, civic service agencies, or others as may be pertinent. The HHA will also continue to host National Night Out Against Crime events as an opportunity to engage residents.

If the PHA is designated as troubled, describe the manner in which financial assistance will be provided or other assistance

n/a

AP-65 Homeless and Other Special Needs Activities

Describe the jurisdictions one-year goals and actions for reducing and ending homelessness including:

Reaching out to homeless persons (especially unsheltered persons) and assessing their individual needs

The City of Hattiesburg actively participates in meetings of the Pinebelt Coalition on Homelessness and supports the efforts of individual organizations whose mission is to serve homeless populations. The City intends to continue this collaboration in 2013, and intends to increase efforts in serving the homeless community by way of funding supportive services offered by appropriate agencies. Direct support will most likely come by way of Public Service grants. The City also intends to support these agencies in attaining funding for additional emergency and transitional shelter.

Addressing the emergency shelter and transitional housing needs of homeless persons

As previously stated, the City intends to continue its collaboration with organizations whose missions include services and housing for homeless persons. The City will support these agencies in competing for and attaining funding for additional emergency and transitional shelter, and may, as funding allows, consider opportunities to support new sustainable programs for emergency and/or transitional housing. More direct support for these housing needs will likely come through Public Facility Improvement activities, which may be more feasible in future years.

Helping homeless persons (especially chronically homeless individuals and families, families with children, veterans and their families, and unaccompanied youth) make the transition to permanent housing and independent living, including shortening the period of time that individuals and families experience homelessness, facilitating access for homeless individuals and families to affordable housing units, and preventing individuals and families who were recently homeless from becoming homeless again

The City of Hattiesburg's partner agencies in the field of homelessness and special needs clients are well organized and maintain close working relationships. The City also facilitates a Housing Roundtable – an organization focused on a variety of housing concerns in Hattiesburg. Though the two coalitions differ somewhat in purpose, there is a great deal of overlap in both subject matter and membership. The City's intended (continued) support of the agencies within both groups are an opportunity to address transition to independent living, affordable housing, and ensuring appropriate case management, as the organizations have already proven capable of doing.

Helping low-income individuals and families avoid becoming homeless, especially extremely low-income individuals and families and those who are: being discharged from publicly

funded institutions and systems of care (such as health care facilities, mental health facilities, foster care and other youth facilities, and corrections programs and institutions); or, receiving assistance from public or private agencies that address housing, health, social services, employment, education, or youth needs

The City has recently supported financial literacy programs, utility assistance programs, and job/skills training programs with CDBG assistance. Forrest General Hospital has a process for identifying homeless persons and persons with substance abuse problems that may require certain case management or supportive service resources, and there is a well-organized process by which people are referred to appropriate agencies that may be able to assist. The City intends to support activities – likely through Public Service grants – that will assist all manners of homelessness, including the prevention thereof.

AP-75 Barriers to affordable housing

Introduction

Hattiesburg has historically supported efforts to meet housing needs of its citizens and has been proactive in the provision of housing to its low- and moderate-income residents. In the 1938-1939 timeframe, the City created one of the first housing authorities in the State of Mississippi. The City supported the creation of the Mississippi Regional Housing Authority No. VIII and its efforts to bring Section 8 assistance to City residents.

The Official Zoning Ordinance and Subdivision Regulations make provisions for affordable housing and provide protection to citizens by ensuring proper land use and high quality residential land development.

Actions it planned to remove or ameliorate the negative effects of public policies that serve as barriers to affordable housing such as land use controls, tax policies affecting land, zoning ordinances, building codes, fees and charges, growth limitations, and policies affecting the return on residential investment

The City's zoning ordinance and related regulations are conducive to affordable housing development. As public policies are concerned, the only notable barrier to affordable housing has to do with development in flood zones where FEMA regulations create limitations on the value/cost of rehabilitation that can take place on existing structures. Historically, new affordable housing has not been created in flood zones when using CDBG or HOME funds because of the challenges of meeting the development requirements. The City will make it known to partner agencies and CHDOs that such new developments are possible given compliance with certain development and insurance requirements.

Discussion

The City continues to implement housing rehabilitation programs to upgrade owner-occupied housing. Through its three CHDOs, the City of Hattiesburg is supporting affordable housing initiatives providing for the construction of new affordable housing and homebuyer down-payment assistance programs. These activities serve to reduce affordable housing barriers. The City has also partnered with service providers in areas of adult financial literacy, jobs training, and employability skills training - all of which address barriers individuals may have in attaining affordable housing. The City will continue to support such programs - most likely through Public Service grants.

AP-85 Other Actions

Actions planned to address obstacles to meeting underserved needs

Several of the City of Hattiesburg's CDBG and HOME funded activities seek to address underserved needs by way of affordable housing, housing rehabilitation, and assistance to non-profit organizations with such missions, among others. The City will continue these efforts in the coming years, and will also continue work in areas of obstacles pertaining to affordable housing.

Actions planned to foster and maintain affordable housing

The City, having updated its Analysis of Impediments to Fair Housing Choice in 2012, has identified particular challenging areas related to affordable housing and housing choice. In this planning period, the City will continue to make its Down Payment Assistance Program available, will continue to promote the Bank On Hattiesburg Program, and will continue to address code compliance in an effort to continue improving housing stock.

Actions planned to reduce lead-based paint hazards

Through the City's ongoing Housing Rehabilitation, Emergency Repair, and other housing activities, the City and its partners comply with 24 CFR Part 35, which often requires lead-based paint abatement. These activities will be continued in 2013 along with the potential for addressing LBP hazards in housing as a stand-alone activity.

Actions planned to reduce the number of poverty-level families

The City will continue to support non-profits and public efforts to improve adult financial literacy, and will continue to promote Bank On Hattiesburg in an effort to address the high number of households in the area that are either un-banked or under-banked and may rely on predatory lenders and other non-traditional financial institutions.

Actions planned to develop institutional structure

The City plans to continue facilitating the Housing Roundtable, participating in the Pinebelt Coalition on Homelessness, and participating with other similar organizations as the opportunity arises. The City will also continue to support agencies in the area as they may have opportunities to compete for grants that serve the needs identified in the City's Consolidated Plan or other opportunities that are of a community benefit.

Actions planned to enhance coordination between public and private housing and social service agencies

As stated previously, the City will continue to participate with the Housing Roundtable and the Pinebelt Coalition on Homelessness, and will continue to encourage agencies that have a mutual interest to participate as well.

Program Specific Requirements

AP-90 Program Specific Requirements

Community Development Block Grant Program (CDBG)
Reference 24 CFR 91.220.(l)(1)

Projects planned with all CDBG funds expected to be available during the year are identified in the Projects Table. The following identifies program income that is available for use that is included in projects to be carried out.

1. The total amount of program income that will have been received before the start of the next program year and that has not yet been reprogrammed	0
2. The amount of proceeds from section 108 loan guarantees that will be used during the year to address the priority needs and specific objectives identified in the grantee's strategic plan.	0
3. The amount of surplus funds from urban renewal settlements	0
4. The amount of any grant funds returned to the line of credit for which the planned use has not been included in a prior statement or plan	0
5. The amount of income from float-funded activities	0
Total Program Income:	**0**

Other CDBG Requirements

1. The amount of urgent need activities	0
2. The estimated percentage of CDBG funds that will be used for activities that benefit persons of low and moderate income.Overall Benefit - A consecutive period of one, two or three years may be used to determine that a minimum overall benefit of 70% of CDBG funds is used to benefit persons of low and moderate income. Specify the years covered that include this Annual Action Plan.	70.00%

HOME Investment Partnership Program (HOME)
Reference 24 CFR 91.220.(l)(2)

1. A description of other forms of investment being used beyond those identified in Section 92.205 is as follows:

   The City of Hattiesburg is not required to provide a local match to the HOME funding allocated to eligible activities. However, the City does seek out other public and private grants from time-to-time to complement its Community Development efforts. All activities/investments undertaken in whole or in part with HOME funding will comply with 24 CFR Part 92.

2. A description of the guidelines that will be used for resale or recapture of HOME funds when used for homebuyer activities as required in 92.254, is as follows:

Section A. Principal Residence/Period of Affordability - The HOME program requires that a property assisted under a homeownership program be used as the owner's principal residence for a designated time period known as the period of affordability. The "period of affordability" is based on the amount of HOME assistance provided for the property, regardless of source (i.e. City, MDA). *Because the City administers homeowner-occupied rehabilitation and repair programs with CDBG funds in the same manner as it does with HOME funds, it applies periods of affordability in a like manner regardless of program.* The applicable periods of affordability are as follows:

PERIOD OF AFFORDABILITY TABLE

Amount of HOME Assistance	Minimum Period of Affordability
<$15,000	5 Years
$15,000 - $40,000	10 Years
>$40,000	15 Years
New Construction (rental)	20 years

The HOME program requires that the assisted property be subject to resale restrictions or recapture provisions, as cited in CFR 92.254(a)(5), for the period of affordability. The option that applies to a particular property will be identified prior to the assistance being provided to the homebuyer.

Section B. Recapture Provisions - The City of Hattiesburg will primarily use the recapture option, which would secure the amount of HOME funds that remain in the project (i.e. homebuyer assistance) by a silent second mortgage and promissory note. Therefore, if the assisted homebuyer sells the home during the applicable period of affordability, the City shall recover HOME homebuyer assistance funds from the net proceeds of sale, as specified in CFR 92.254(a)(5)(ii). Recapture of HOME funds will be handled as follows: First, the amount of HOME assistance covered under the mortgage and promissory note will be reduced pro-rata each complete month the homebuyer has owned and occupied the house, based on the following schedule:

Housing Rehabilitation and New Construction Affordability Period Program Guidelines

The AFFORDABILITY period begins for CDBG and HOME on the day of the home repair or rehabilitation has been completed and closed out or the new home has closed. Homebuyers or Homeowners that transfer ownership through sales, disposal, or abandonment prior to expiration of the affordability period will be required to repay a percentage of the CDBG or HOME direct subsidy based on a pro-rata basis. This percentage of the subsidy to be repaid is determined by the length of time the Homeowner has occupied the home in relation to the period of affordability (i.e., the City would forgive 50 percent of the subsidy amount for an owner who sold the home half-way through the ten year period of affordability and the City would recapture the remaining 50 percent).

Exceptions - The affordability restriction may terminate upon the occurrence of any of the following events: foreclosure, death of a grant recipient, transfer in lieu of foreclosure or an FHA insured

mortgage to HUD. The affordability restriction shall be revived according to the original terms if, during the original affordability period, the owner of record before the termination event, obtains an ownership interest in the housing.

The affordability restriction can be transferred to a new owner-occupant if the property is sold to a new purchaser that meets the City of Hattiesburg's eligibility criteria stated within these guidelines, and the proposed new owner-occupant is eligible and agreeable to the terms of the affordability restriction. Such an arrangement must follow the process and regulations of a "Resale Provision," which carries with it certain unique requirements. Eligibility must be determined and documents submitted to the Department of Federal and State Programs prior to closing on the home. New purchasers must be low- or moderate-income as defined by HUD and occupy the property as the family's principal residence.

Affordability Enforcement - A lien will be placed on the property in the form of a recorded deed of trust with the City of Hattiesburg. The deed of trust will take a second to the original instrument of the lender financing the property. The lien will be canceled after the period of affordability expires.

In those cases where a homebuyer engages in a voluntary sale without substantiation of compelling economic circumstances, the City will require a full repayment of the pro-rated amount of HOME assistance.

In those cases where the City is made aware the sale of the property is involuntary (a sale due to foreclosure, loss of income, job transfer or similar circumstances), the downpayment, principal payments, and cost of capital improvements made by the homebuyer since purchase would be calculated. If the sum of these investments, plus the prorated amount due the City, exceeds the net proceeds of sale, the homebuyer would be allowed to recover his or her investment in the property first, with the remainder being paid back to the City. Such an amount would be considered payment in full. The homebuyer would be allowed to keep any net proceeds left after recovery of their investment and repayment of HOME assistance to the City.

In cases where a homebuyer violates the terms and conditions of the second mortgage and/or promissory note, (e.g., sells the property on a Land Contract without the approval of the City or uses the property for rental purposes), the City reserves the right to require the full repayment of the pro-rated amount of HOME assistance.

Section C. Resale Provisions - Where appropriate, the City may utilize resale requirements on a project-by-project basis in accordance with 24 CFR 92.254 (a.)(5.)(i.) These requirements would ensure a HOME assisted property that does not continue to be the principal residence of the assisted homebuyer for the required period of affordability will be made available for subsequent purchase only to a low-income household that will occupy the property as their principal residence. The requirements would also allow the original HOME-assisted owner a fair return on investment (including the homeowner's investment and any capital improvement) and require that the housing remain affordable to a reasonable range of low-income homebuyers.

Section D. CHDOs – The City may enter agreements with CHDOs acting in the role of developer, sponsor, or owner as is appropriate for a given project. CHDOs undertaking acquisition and/or rehabilitation/reconstruction activities under a homebuyer program may be assisted with HOME funds for both a development subsidy and for homebuyer assistance. The total HOME assistance would be secured by a mortgage and promissory note prior to the housing developer's use of HOME funds for acquisition and/or rehabilitation/construction. Upon sale to a homebuyer, this mortgage and promissory note would be discharged, with the HOME funds distributed as follows: Development subsidy (forgiven by City).

The homebuyer assistance may be in the form of a reduced sale price, downpayment/closing cost assistance, or another eligible form of assistance, and would be described in the Agreement between the City and the housing developer. The homebuyer assistance would be secured by a silent second mortgage and promissory note from the homebuyer to the City or where applicable, a covenant running with the land, deed restriction or other similar mechanism for the applicable period of affordability. The recapture provisions in Section B would apply if the assisted homebuyer sells the home or otherwise does not continue to occupy the home as their principal place of residence during the applicable period of affordability.

Section E. City Programs and Other Projects - The City of Hattiesburg may use HOME funds for the acquisition and/or rehabilitation/construction of properties for resale to homebuyers. Additionally, the City, its subrecipients, or CHDOs may engage in Rental activities if/when allowed by the Action Plan. The recapture provisions in Section B would apply to all such programs with the understanding that reference to "Homebuyer" may imply "Property Owner" in activities such as Rental where the owner is not the occupant (or is not the only occupant).

3. A description of the guidelines for resale or recapture that ensures the affordability of units acquired with HOME funds? See 24 CFR 92.254(a)(4) are as follows:

   See answers to question #2 above.

4. Plans for using HOME funds to refinance existing debt secured by multifamily housing that is rehabilitated with HOME funds along with a description of the refinancing guidelines required that will be used under 24 CFR 92.206(b), are as follows:

   The City of Hattiesburg has no such plans to refinance the existing debt of any such property. Should plans arise for such an activity, plans and guidelines will be established, and the Consolidated/Action Plan would be amended accordingly following the existing Citizen Participation Plan.

Discussion

The aggregate use of CDBG funds in 2013 will be used to determine that a minimum overall benefit of 70% of CDBG funds is used to benefit persons of low and moderate income.

CPD Maps

Consolidated Plan and Continuum of Care Planning Tool

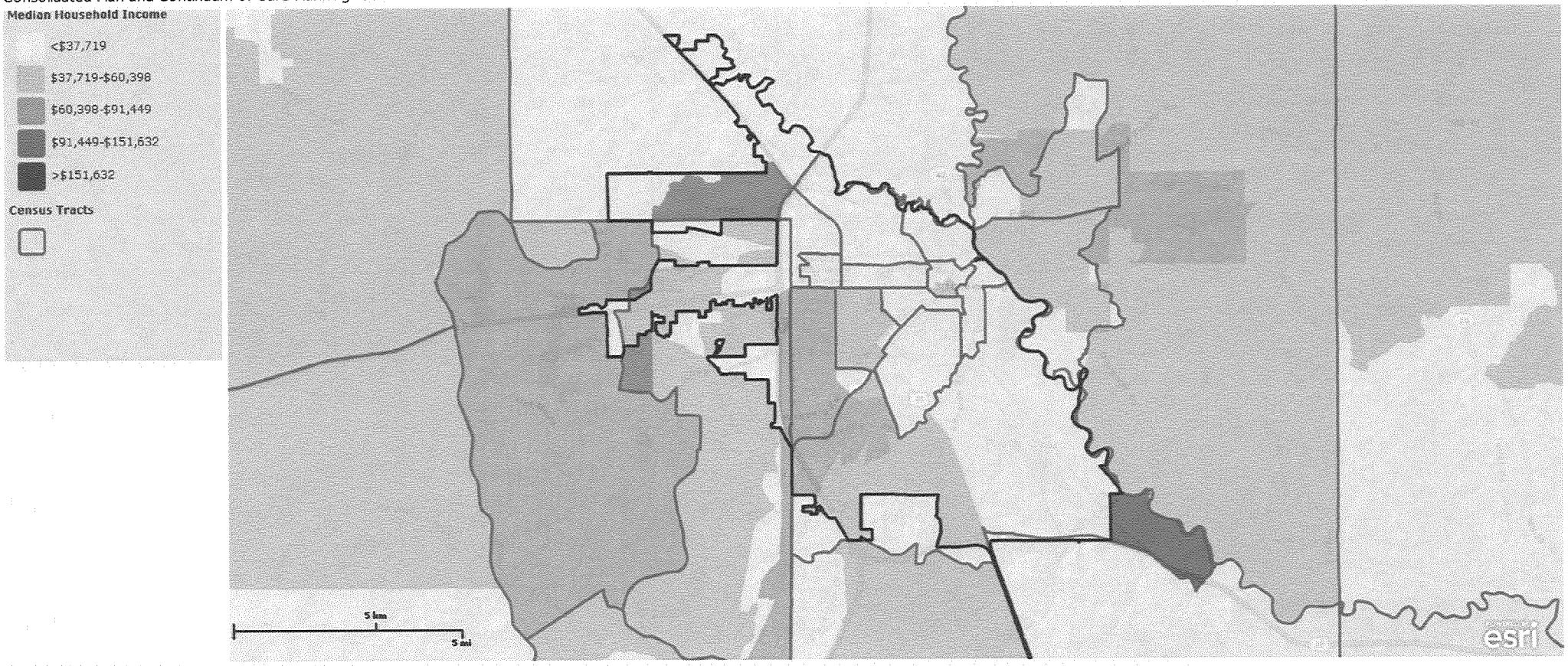

Copyright 2011-2012 HUD. All rights reserved. Mon Oct 29 2012 02:41:15 PM.

CPD Maps

Consolidated Plan and Continuum of Care Planning Tool

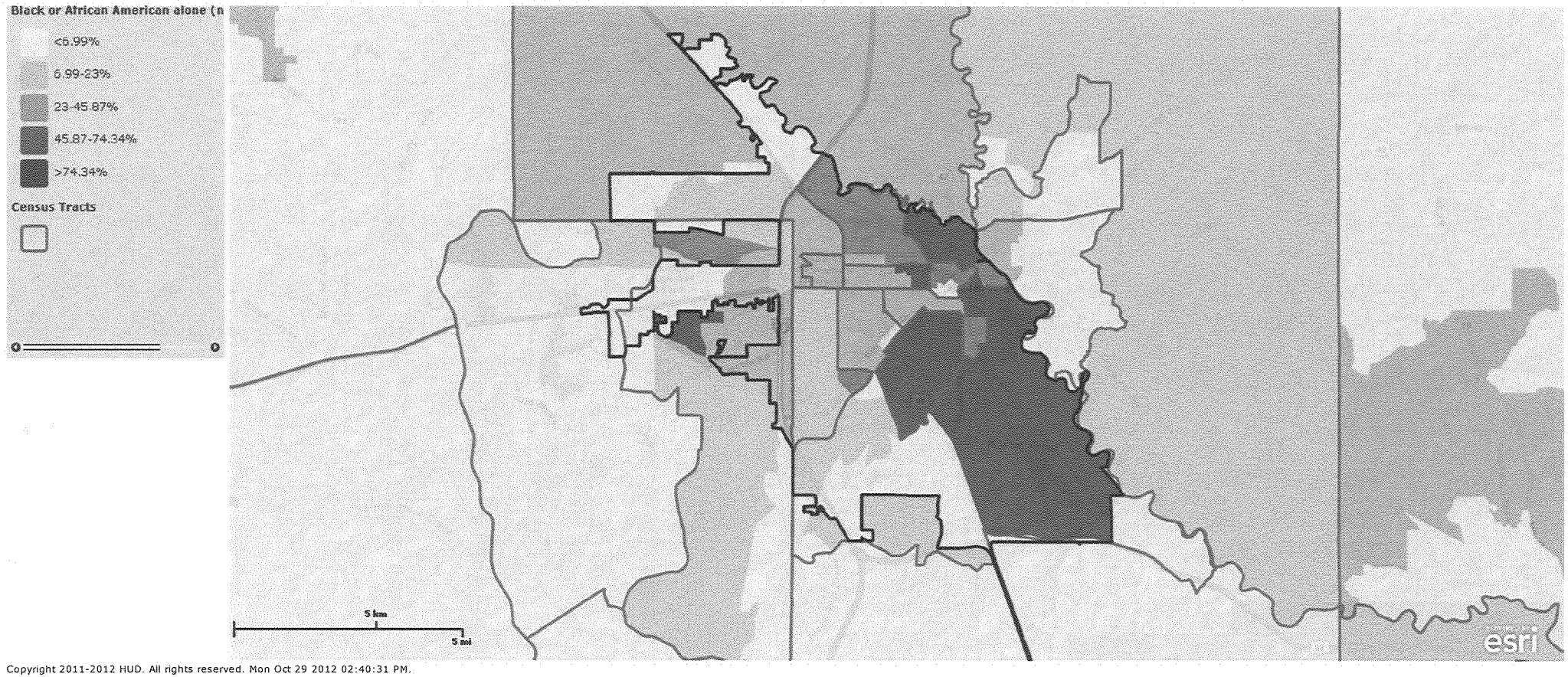

Copyright 2011-2012 HUD. All rights reserved. Mon Oct 29 2012 02:40:31 PM.

City of Hattiesburg
Public Hearing – Jackie Dole Sherrill Community Center
June 28, 2012

Questions/Statements/Concerns	Answers/Clarifications/Guidance
Councilman Ware spoke favorably of the Façade Improvement Program.	General discussion
There were concerns regarding the needs to address homelessness.	As a related topic, the AIDS Services Coalition will soon award mini grants among the Coalition on Homelessness members, and another subrecipient will administer a utility assistance program, which indirectly prevents homelessness.
There were concerns regarding specific neighborhoods within the City of Hattiesburg. There should be programs in place that bring housing up to standard within those neighborhoods, such as Briarfield Apartments and within the Tipton Street, East Hardy Street, and Lincoln Street areas.	Taken under advisement
A resident stated that the NET Team has helped to lower the crime rate within the Hall/Katie Avenue community, but crimes are increasing at the Frances Street Apartments. There should be programs in place to make the neighborhoods safe for kids, and Public Transportation Services can improve public safety and offer a means of transporting children/youth to sites/locations where Public Service programs for youth take place.	Taken under advisement
There was a suggestion for the Old Eaton School Community Center on the east side to be expanded to service the elderly. The communities need programs that target the elderly and the youth.	Taken under advisement

City of Hattiesburg
Public Hearing – Lake Terrace convention Center
July 10, 2012

Questions/Statements/Concerns	Answers/Clarifications/Guidance
Are there target areas for funding that the City identifies?	Census data determines what areas (tracts) are considered low- or moderate-income areas. Presently, the City does not target certain areas for programs. However, certain activities may only take place in low/mod Census tracts to benefit the entire area. Also, the City partners with other organizations that do housing rehabilitation; some of those organizations take an approach that focus on specific areas, but the benefiting homeowners still must qualify as low to moderate-income themselves.
Has funding been identified?	The Consolidated Plan that we are discussing assumes that funding will be allocated in the 5-year period similar to how it has historically been allocated. Funding is expected, but exact dollar amounts are not known for a given year until we are 3-5 months into each year.
Is there anything specific to be accomplished by the plan?	In general, the Consolidated Plan is a way of prioritizing the communities needs in terms of HUD-eligible community development efforts, so this Public Participation effort serves to identify what will be included. More specifically, staff hears most often from the public about needs related to housing rehabilitation, emergency repair needs, and general housing concerns.
	A 2008 Analysis of Impediments to Fair Housing identified that in Hattiesburg, there was not an appropriate supply of code compliant housing, which speaks to the need to bring housing up to code. Efforts in recent years have addressed these issues, but limited resources are a challenge in fully alleviating the problem.
Is rehabilitation assistance driven by need?	At this time, the City serves applicants from an existing list on a first come, first served basis.
When the City paved the streets in Palmers Crossing, why did the City not put more into it?	Certain streets in Palmer's Crossing were actually paved in recent years using CDBG funds. These were streets that may not have been paved were it not for CDBG funds being assigned (or fewer streets would have been paved in that area without funding). Infrastructure projects are expensive relative to some of the other CDBG projects that the City undertakes, and unfortunately, funds are limited.
Palmer's Crossing will be much more valuable in the near future due to the upgrades being made to the Port of Gulfport and the possible distribution of cargo through the area. Consider that area for future projects – roads, sewer, etc. – and take care of the individuals within that community needing assistance.	Taken under advisement
Is there funding for	Each project undertaken goes through a required environmental

environmental compliance?	review process, which sometimes can require mitigation or abatement of environmental concerns. Funding availability for such can determine whether a project is feasible or not.
Are there funds designated specifically for environmental compliance for older homes?	At one time in recent years, a partner agency did have access to funding for lead abatement in older homes, and the State Department of Health has screened and treated children diagnosed with lead poisoning. On an ongoing basis, the City's CDBG and HOME Rehab and Repair Programs test for and abate lead and asbestos hazards on an as required basis. The cost of such abatement must be made with funds available for such rehab or repair, and the cost can sometimes be prohibitive for the program. In the future, if included in the Consolidated Plan and subsequent Action Plan(s), CDBG funds can be used specifically as a stand-alone activity for 1) lead based paint testing and abatement and/or 2) screening for lead poisoning.
Environmental compliance, lead testing/abatement, and lead poison screening should all be included in some fashion in the Consolidated Plan.	Taken under advisement
Does the City have grant writers that will seek funding for lead and environmental concerns?	The City's grant writer is actively involved in the City's Brownfields Program and is called upon to seek out various grant opportunities for the City.
The Katie-John-Dabbs Neighborhood is concerned about needs within the community and nothing seems to be done. Does the City qualify for NSP funding?	The NSP Programs are formula driven, and the only Mississippi jurisdictions to receive funding directly from HUD for any of the rounds of NSP have been The City of Jackson and the State of Mississippi

City of Hattiesburg
Public Hearing – Thames Elementary School Auditorium
July 12, 2012

Questions/Statements/Concerns	Answers/Clarifications/Guidance
There were specific areas of interest in the CDBG program such as the process for the demolition of homes, how many had been demolished, how deconstruction could fit into the program, the process for home rehabilitation, and the application process for grants for low-to-moderate income businesses.	All of the items mentioned were discussed, and staff explained current processes and procedures. All of the items mentioned were taken under advisement as an area that the residents would like to see included in the Consolidated Plan.
Further questions about demolition	Fifty thousand dollars is allocated from the 2012 CDBG funds for the demolition of houses. Staff explained the process and the criteria for those demolitions.
The life span of housing in the neighborhood (the Coit Street area) appears to have passed, and there is no significant business district - probably because of the flood zone. A targeted effort for flood zone areas is needed to benefit families within the community. It could become a booming area in the future, but it will only benefit those who can afford to develop in the flood zone unless something is done to assist those that already live there. Is there a way to get assistance from CDBG funding for the flood zone residents? A training component should be included to benefit the community.	Flood zones present an additional challenge in the use of federal funds. FEMA, and consequently, the local building codes, place a cap on the amount of rehabilitation (financially) that can be permitted on structures that are within the floodplain. New Construction can occur as long as the design meets certain criteria such as being built above base flood elevation. Activities that involve creation of or upgrades within open spaces may also be eligible as CDBG projects.
There was a suggestion for Youth Development Programs. Since a college education is a must, the development of young people and viable jobs is important.	Taken under advisement

LOCAL GOVERNMENT CONSULTATION

Name of Local Government: Forrest Co.

Contact Person: Chris Bowen

Address: 641 N. Main St.

Phone: 601-545-6091 Fax:

1. Recognizing that your jurisdiction has common boundaries with the City of Hattiesburg, are there infrastructure problems that are common to both jurisdictions? Yes
If so, please identify problems and discuss:

Water System:

Sanitary System: Our shared industrial park must have upgrades to our lagoon system to sustain what we have or grow what we have.

Roads, Highways, Bridges: We continue to work our bridges for both the benefit of H'burg & Forrest County

2. Are there common economic development problems or needs projects that need to be addressed?
If so, what are they? Housing of inmates @ the Forrest Co. Regional Jail

TO: Andrew

LOCAL GOVERNMENT CONSULTATION

Name of Local Government: Lamar County Board of Supervisors

Contact Person: Chuck Bennett

Address: PO Box 1240

Phone: 794-3406 Fax: 794-1045

1. Recognizing that your jurisdiction has common boundaries with the City of Hattiesburg, are there infrastructure problems that are common to both jurisdictions? _____
If so, please identify problems and discuss:

Water System:
N/A

Sanitary System:
Yes — There is a need for more sewage infrastructure.

Roads, Highways, Bridges:
Yes — completion of 4th street project.... Beltway project...

2. Are there common economic development problems or needs projects that need to be addressed? _____
If so, what are they?
N/A

3. Are there common housing problems, needs, or programs that need to be discussed? _____
If so, what are they?
N/A

Please feel free to attach additional sheets if you have more comments that you would like to share.

City of Hattiesburg
P. O. Box 1898 ~ Hattiesburg, MS 39403 ~ (601) 554-1006 ~ Fax (601) 545-4592

LOCAL GOVERNMENT CONSULTATION

Name of Local Government: City of Petal

Contact Person: Mayor Hal Marx

Address: 119 W. 8th Ave., Petal, MS 39465

Phone: 601-545-1776 Fax: 601-545-6685

1. Recognizing that your jurisdiction has common boundaries with the City of Hattiesburg, are there infrastructure problems that are common to both jurisdictions? Yes
   If so, please identify problems and discuss:

   Water System:

   Sanitary System:
   The City of Petal sends its wastewater to the City of Hattiesburg's treatment facility. We have a good, cooperative relationship between the two cities.

   Roads, Highways, Bridges:

2. Are there common economic development problems or needs projects that need to be addressed? _____
   If so, what are they?

07-05-12P04:37 RCVD

CITY OF HATTIESBURG
CONSOLIDATED STRATEGY AND PLAN
HOMELESS QUESTIONNAIRE

Name of Agency: The Salvation Army
Contact Person: Lawanda Sumpter / Katie Tate
Address: 5670 US Hwy 49
Phone: 601-544-3684
Fax: 601-543-0363
Email: Lawanda_Sumpter@uss.salvationarmy.org
Katie_Tate@uss.salvationarmy.org

1. Please describe the facilities that you have available to provide emergency shelter (emergency housing) for homeless or those at risk of homelessness.
   a. Describe the physical facilities that you use to serve the business, i.e., how may beds, feeding facilities, etc.
   43 bed facility with a full size Kitchen & dining room, laundry room

   b. Who do you serve?
   Homeless and low income men, women & families.
   (90 days) Bootstrap Program which offers transitional housing for clients who have already completed an alcohol/drug abuse program/treatment.

   c. What are the typical income levels of those you serve?
   Homeless and low income

   d. How many can you accommodate?
   43 individuals

   e. What specifics do you offer at the shelter?
   Breakfast, Dinner, laundry services, referrals, case management, clothing and prescription assistance

f. Do the homeless that you serve have special needs, i.e., counseling for alcohol or drug abuse, HIV/AIDS, domestic abuse counseling, etc? Please list and describe.

Yes, anyone staying in our Emergency Shelter is asked to meet with our Social Services Director / case worker so that they can evaluate the clients needs. Once they are evaluated then our Social Services will refer them to the appropriate organization or rehab facility.

g. What are the shelter's major sources of funding? Please provide approximate amounts.

Source: ESG
Amount: $75,000

Source:
Amount:

Source:
Amount:

Source:
Amount:

2. Are you aware of any other agency in Hattiesburg or Forrest County that provides emergency shelter for homeless or those at risk of homelessness? Please give the name, location and other information you have.

NO

3. How many Hattiesburg residents have you served? Shelter (Homeless Residents)

2009	2010	2011
842	867	992

4. Please estimate the number of families in need of emergency shelter annually.
Forrest County: 240 Hattiesburg: 150

Basis for estimate:

Previous need and increasing need of families daily.

5. Does your agency provide other services that address the needs of the homeless or those at risk of homelessness, i.e., food, clothing, rent or utility payments?

a. Food
How many from Hattiesburg? 2011 – 246 (Has increased For 2012)

Major source of funds:
The Salvation Army Operating Funds

b. Clothing
How many from Hattiesburg? 2011 - 338

Major source of funds:
Salvation Army Family Thrift Store

c. Rent
How many from Hattiesburg? 2011 – 46 (Has increased For 2012)

Major source of funds:
Salvation Army Family Thrift Store

d. Utility Payments:
How many from Hattiesburg? 2011 - 234

Major source of funds:
Salvation Army Family Thrift Store

e. Counseling for Drug Abuse
How many from Hattiesburg? No, appropriate referrals made

Major source of funds:

f. Counseling for Alcohol Abuse
How many from Hattiesburg? NO, appropriate referrals made

Major source of funds:

6. Where do those that you assist go for transitional or permanent housing when they must leave your emergency shelter?
Permanent Supportive Housing - Pine Grove Village, Green Meadows, Public Housing, Sect-8, Private Apts.

7. Does your agency provide Transitional Housing facilities? NO
If yes, please provide the following information:

a. Who do you serve?

b. What are the typical income levels you serve?

c. How long can those you assist remain in transitional housing?

d. How many can you accommodate?

e. What type of services and assistance do you provide those housed in your transitional housing facility?

f. How many Hattiesburg residents have you served?

2009 _____ 2010 _____ 2011 _____

g. Please estimate the number of families in need of transitional housing.
Forrest County: _____ Hattiesburg: _____

8. Are you aware of any transitional housing facilities available in Hattiesburg or Forrest County? NO
If so, please give the name, location or any other information you have.

9. Please identify any agency or program to which you refer persons or families you help in your emergency shelter or transitional housing.
Green Meadows, Pine Grove Village, Children's Shelter, Domestic Violence Shelter, PRVO, Saint Vincent DePaul, Catholic Social Services, Christian Services, Lighthouse Ministries

10. Please identify agencies that provide permanent housing for the homeless.
Section 8, HUD based housing

11. Please identify any agencies that provide permanent supportive housing services, i.e., Section 8, Weatherization, etc.
PRVO, Section 8, Hattiesburg Housing Authority

CITY OF HATTIESBURG
CONSOLIDATED STRATEGY AND PLAN
HOMELESS QUESTIONNAIRE

Name of Agency: Domestic Abuse Family Shelter, Inc.

Contact Person: Becky Sims

Address: Post Office Box 273, Laurel, MS 39441-0273

Phone: 601-428-1707

Fax: 601-428-3180

Email: dafss@bellsouth.net

1. Please describe the facilities that you have available to provide emergency shelter (emergency housing) for homeless or those at risk of homelessness.
   a. Describe the physical facilities that you use to serve the business, i.e., how many beds, feeding facilities, etc.

      This agency provides temporary emergency shelter in a large house in downtown Hattiesburg. Twenty beds are available. The agency also rents an office on Adeline Street in Hattiesburg for counseling for the community and training.

   b. Who do you serve?

      The shelter serves homeless females who are victims of domestic violence and their children up to 90 days. The Counseling is offered to the community for domestic violence issues (men and women).

   c. What are the typical income levels of those you serve?

      The majority of women in shelter report income levels at or below poverty level. However, those involved in community counseling have a higher level of income.

   d. How many can you accommodate>

      The shelter has 20 beds which are for women and children.

   e. What specifics do you offer at the shelter?

07-05-12P01:51 RCVD

The shelter provides all basic needs, beds and clean bedding, linens and towels, Food and washing facilities, transportation, individual and group counseling, Information and referrals, case management, victim advocacy, life skills training, child care and child needs, and emotional support. The agency also operates a 24-hour toll-free crisis line.

f. Do the homeless that you serve have special needs, i.e., counseling for alcohol or drug abuse, HIV/AIDS, domestic abuse counseling, etc.?

Our clients all have the need for domestic abuse counseling, as well as for other issues such as mental health, drug/alcohol, sexual abuse, etc. For those issues, clients are referred to other agencies in the community to assist them.

g. What are the shelter's major sources of funding? Please provide approximate amounts.

Source:

Victims of Crime Assistance Grant
$140,852.00
Emergency Shelter Grant
$ 50,000.00
Family Violence Prevention Grant
$85,497.00
Stop Violence Against Women Grant
$43,000.00
Miss. State Dept. of Health Domestic Violence Fund
$42,764.00
Individual, Church, Civic Group, and Business Contributions
$40,000.00
United Way of Southeast Mississippi
$55,000.00
United Way of the Pine Belt Region
$38,500.00

2. Are you award of any other agency in Hattiesburg or Forrest County that provides emergency shelter for homeless or those at risk of homelessness? Please give the name, location, and other information you have.

The Salvation Army in Hattiesburg.

3. How many Hattiesburg residents have you served?

(Does not include crisis calls)

2009 – 112 2010 – 103 2011 – 128

4. Please estimate the number of families in need of emergency shelter annually.

   Approximately 120 in the Hattiesburg Shelter. Based on 2011 numbers.

5. Does your agency provide other services that address the needs of the homeless or those at risk of homelessness, i.e., food, clothing, rent or utility payments?

   a. Food
      How many from Hattiesburg? 127 – Based on women and children in The Hattiesburg Shelter in 2011.

      Major source of funds. – Emergency Food and Shelter Program, Miss. State Domestic Violence Fund, United Way of Southeast Mississippi, Donations.

   b. Clothing
      How many from Hattiesburg? 127 Based on women and children in The Hattiesburg Shelter in 2011.

      Major source of funds – None – all clothing is donated from the community or from businesses.

   c. Rent – None – referred to other agencies

   d. Utility Payments – None – referred to other agencies

   e. Counseling for Drug Abuse – None – referred to other agencies

   f. Counseling for Alcohol Abuse – None – referred to other agencies

6. Where do those that you assist go or transitional or permanent housing when they must leave your emergency shelter?

   They are referred to housing agencies such as Housing Authorities, low-income or Section 8 housing. When funding is available, our agency pays utility and rent deposits.

7. Does your agency provide Transitional Housing facilities? No

8. Are you aware of any transitional housing facilities available in Hattiesburg or Forrest County? No.

9. Please identify any agency or program to which you refer persons or families you Help in your emergency shelter or transitional housing.

   See #6. – The Shafer Center for Crisis Intervention, Pine Grove Green Meadows, The Salvation Army, Christian Services, South Mississippi Children's Center, Pearl River Valley Opportunity, Catholic Social and Community Services, WIN Job Center, Friends for Financial Freedom, Christian Women's Job Corps, Westminster Presbyterian Church.

10. Please identify agencies that provide permanent housing for the homeless.

    City of Hattiesburg
    Habitat for Humanity
    Salvation Army

11. Please identify ant agencies that provide permanent supportive services, i.e., Section 8, weatherization, etc.

    Section 8
    Housing Authority
    Pearl River Valley Opportunity
    Carpenter's Helper

CITY OF HATTIESBURG CONSOLIDATION PLAN
PUBLIC HOUSING NEEDS QUESTIONNAIRE

Name of Agency: Hattiesburg Habitat
Contact Person: Mike Pascarella
Address: PO Box 1092
Phone: 601-582-4663 Fax: 601-582-8282
Email: mpascarella@hattiesburghabitat.org

1. Please identify Public Housing Developments in Hattiesburg that receive funds through a HUD Comprehensive Grant Program:

   A. Name of Development: _____
   Number of Units: _____
   Amount of Grant Allocated to Development: _____
   Proposed Use of Funds:
   _____
   _____
   _____

   B. Name of Development: _____
   Number of Units: _____
   Amount of Grant Allocated to Development: _____
   Proposed Use of Funds:
   _____
   _____
   _____

   C. Name of Development: _____
   Number of Units: _____
   Amount of Grant Allocated to Development: _____
   Proposed Use of Funds:
   _____
   _____
   _____

D. Name of Development: _____

Number of Units: _____

Amount of Grant Allocated to Development: _____

Proposed Use of Funds:

_____

_____

_____

2. What role does the City of Hattiesburg play in review of the proposed public housing sites, i.e., zoning, compliance, review for availability of water, sewer or other utilities?

_____

_____

_____

3. What role does the City of Hattiesburg play in review of the Comprehensive Plan for the Regional Housing Authority?

_____

_____

_____

4. In each public housing development in Hattiesburg, what is the physical condition of the public housing units, i.e., how many are in good (code standard) condition; how many are substandard; what are the needs of the units?

A. Name of Development: _____

Number of Units in Good Condition (Code Standard): _____

Improvements Needed in Units:

_____

_____

_____

B. Name of Development: _____

Number of Units in Good Condition (Code Standard): _____

Improvements Needed in Units:

_____

_____

_____

C. Name of Development: _____

Number of Units in Good Condition (Code Standard): _____

Improvements Needed in Units:

_____

_____

_____

D. Name of Development: _____

Number of Units in Good Condition (Code Standard): _____

Improvements Needed in Units:

_____

_____

_____

5. Please identify restoration and revitalization needs of each public housing development:

A. Name of Development: _____

Restoration and Revitalization Needs:

_____

_____

_____

Funds Needed to Meet Needs: _____

B. Name of Development: _____

Restoration and Revitalization Needs:

_____

_____

_____

Funds Needed to Meet Needs: _____

C. Name of Development: _____

Restoration and Revitalization Needs:

_____

_____

_____

Funds Needed to Meet Needs: _____

D. Name of Development: _____

Restoration and Revitalization Needs:

_____

_____

_____

Funds Needed to Meet Needs: _____

6. Please provide a copy of the most current Section 504 Needs Assessment for Hattiesburg Public Housing developments.

7. When do you anticipate conducting public hearings for the Comprehensive Grant Program funding? _____

   Where? _____

   Time? _____

8. Please provide the following information relative to waiting lists for families eligible for your agency's public housing units in Hattiesburg:

   A. Total eligible families on waiting list: 8

   B. Total female headed households on waiting list: 6

   C. Elderly on waiting list: 0

   D. Number of units needed by bedroom size:

1 bdrm	2 bdrm	3 bdrm	4 bdrm	5 bdrm
		8		

   E. Total on waiting list claiming federal preference: _____

   F. Female headed household claiming federal preference: _____

   G. Elderly claiming federal preference: _____

9. Provide the following information for families currently receiving Section 8 housing assistance in Hattiesburg:

   A. Total number being assisted: _____

   B. Small families assisted: _____

   C. Large families assisted: _____

   D. Female headed households assisted: _____

   E. Elderly headed households assisted: _____

10. How many public housing units in Hattiesburg were currently vacant as of July 1, 2007? _____
    Total number? _____

1 bdrm	2 bdrm	3 bdrm	4 bdrm	5 bdrm

11. Please describe any resident initiatives that are underway, i.e., Resident Councils, participation of Hattiesburg Public Housing residents in management, economic opportunity programs, etc.

    A. Name of Development: _____

Describe resident initiative underway or proposed:

_____

_____

_____

B. Name of Development: _____

Describe resident initiative underway or proposed:

_____

_____

_____

C. Name of Development: _____

Describe resident initiative underway or proposed:

_____

_____

_____

D. Name of Development: _____

Describe resident initiative underway or proposed:

_____

_____

_____

12. Please describe any drug elimination programs funded under Hattiesburg Public Housing programs. Please provide the funding source and amount of funding.

A. Name of Development: _____

Funding source: _____

Amount: _____

Description of program:

_____

_____

_____

B. Name of Development: _____

Funding source: _____

Amount: _____

Description of program:

_____

_____

_____

C. Name of Development: _____

Funding source: _____

Amount: _____

Description of program:

_____

_____

_____

D. Name of Development: _____

Funding source: _____

Amount: _____

Description of program:

_____

_____

_____

13. Please describe any youth sports programs funded under Hattiesburg Public Housing programs. Please provide the funding source and the amount of the funding.

A. Name of Development: _____

Funding source: _____

Amount: _____

Description of program:

_____

_____

_____

B. Name of Development: _____

Funding source: _____

Amount: _____

Description of program:

_____

_____

_____

C. Name of Development: _____

Funding source: _____

Amount: _____

Description of program:

_____

_____

_____

D. Name of Development: _____

Funding source: _____

Amount: _____

Description of program:

_____

_____

_____

14. Please describe the strategy for improving management of public housing in Hattiesburg.

_____

_____

_____

_____

15. Please describe the strategy for improving the living environment of low and moderate-income persons residing in public housing in Hattiesburg.

_____

_____

_____

_____

16. Please provide a copy of the criteria for eligibility for becoming a resident of public housing.

17. How many public housing units are suited for housing the handicapped? _____
HIV/AIDS victims and their families? _____ Elderly? _____
Provide an explanation if necessary:

_____

_____

_____

_____

18. Please explain what, if any, measures (priorities) you take to provide housing for the homeless.
Public Housing Units:

19. Assuming we can establish the priority housing needs for your waiting lists, what are other priorities of the Regional Housing Authority in Hattiesburg?

- Priority #1 (Why and Where?)
Provide down payment assistance grants for all of Hattiesburg Homeowners with Habitat. Fund Any Education Salary That is used To Educate Low To Moderate Income Families by our Staff.

What do we expect to accomplish (years 1, 2, & 3).

Build 12-18 New homes For Low To Moderate Income Families.

- Priority # 2 (Why and Where?)

Have The city Do The Infrastructure To a Mixed Income SubDivisions That we can Build in For Low To Moderate Income

What do we expect to accomplish (years 1, 2, & 3).

- Priority # 3 (Why and Where?)

What do we expect to accomplish (years 1, 2, & 3).

- Priority # 4 (Why and Where?)

What do we expect to accomplish (years 1, 2, & 3).

- Priority # 5 (Why and Where?)

What do we expect to accomplish (years 1, 2, & 3).

- Priority # 6 (Why and Where?)

What do we expect to accomplish (years 1, 2, & 3).

_____

_____

_____

_____

CITY OF HATTIESBURG CONSOLIDATION PLAN
PUBLIC HOUSING NEEDS QUESTIONNAIRE

HATTIESBURG HOUSING AUTHORITY

Name of Agency: HATTIESBURG ONLY HOUSING AUTHORITY

Contact Person: MILAN HOZE

Address: P.O. BOX 832 - HBURG, MS 39403

Phone: 601-583-1881 Fax: 601-582-0759

Email: MHOZE@HATTIESBURGHA.COM

1. Please identify Public Housing Developments in Hattiesburg that receive funds through a HUD ~~Comprehensive~~ Grant Program: CAPITAL FUND

A. Name of Development: BRIARFIELD HOMES

Number of Units: 120

Amount of Grant Allocated to Development: $144,960-

Proposed Use of Funds:

SEE ATTACHMENT #1

B. Name of Development: ROBERTSON PLACE

Number of Units: 120

Amount of Grant Allocated to Development: $144,960-

Proposed Use of Funds:

SEE ATTACHMENT #1

C. Name of Development: NEW DEVELOPMENT

Number of Units: 56

Amount of Grant Allocated to Development: $67,648-

Proposed Use of Funds:

SEE ATTACHMENT #1

D. Name of Development: _____

Number of Units: _____

Amount of Grant Allocated to Development: _____

Proposed Use of Funds:

_____

_____

_____

2. What role does the City of Hattiesburg play in review of the proposed public housing sites, i.e., zoning, compliance, review for availability of water, sewer or other utilities?

ZONING, COMPLIANCE, WATER, SEWER, GARBAGE

3. What role does the City of Hattiesburg play in review of the Comprehensive Plan for the ~~Regional~~ LOCAL Housing Authority?

Attend PUBLIC HEARING
Sign off form HUD 50077-SL

4. In each public housing development in Hattiesburg, what is the physical condition of the public housing units, i.e., how many are in good (code standard) condition; how many are substandard; what are the needs of the units?

A. Name of Development: Brinfield Homes

Number of Units in Good Condition (Code Standard): -0-

Improvements Needed in Units:

UNITS ARE OVER 70 years old. IN Need of REPLACEMENT

B. Name of Development: ROBERTSON PLACE

Number of Units in Good Condition (Code Standard): -0-

Improvements Needed in Units:

UNITS ARE OVER 70 yrs old. IN Need of REPLACEMENT

C. Name of Development: NEW Development

Number of Units in Good Condition (Code Standard): 56

Improvements Needed in Units:

D. Name of Development:

Number of Units in Good Condition (Code Standard):

Improvements Needed in Units:

5. Please identify restoration and revitalization needs of each public housing development:

A. Name of Development: Brianfield Homes

Restoration and Revitalization Needs:

TOTAL

Funds Needed to Meet Needs: $11,000,000

B. Name of Development: Robertson Place

Restoration and Revitalization Needs:

TOTAL

Funds Needed to Meet Needs: $11,000,000

C. Name of Development: New Development

Restoration and Revitalization Needs:

NONE

Funds Needed to Meet Needs: -0-

D. Name of Development:

Restoration and Revitalization Needs:

Funds Needed to Meet Needs: _____

6. Please provide a copy of the most current Section 504 Needs Assessment for Hattiesburg Public Housing developments.

7. When do you anticipate conducting public hearings for the ~~Comprehensive~~ CAPITAL Fund Grant Program funding? JUNE 19, 2012

   Where? ADMIN. OFFICE

   Time? 12 O'CLOCK NOON

8. Please provide the following information relative to waiting lists for families eligible for your agency's public housing units in Hattiesburg: SEE ATTACHMENT 2

   A. Total eligible families on waiting list: _____

   B. Total female headed households on waiting list: _____

   C. Elderly on waiting list: _____

   D. Number of units needed by bedroom size:

1 bdrm	2 bdrm	3 bdrm	4 bdrm	5 bdrm

   E. Total on waiting list claiming federal preference: _____

   F. Female headed household claiming federal preference: _____

   G. Elderly claiming federal preference: _____

9. Provide the following information for families currently receiving Section 8 housing assistance in Hattiesburg: WE DO NOT ADMINISTER SECTION 8

   A. Total number being assisted: _____

   B. Small families assisted: _____

   C. Large families assisted: _____

   D. Female headed households assisted: _____

   E. Elderly headed households assisted: _____

10. How many public housing units in Hattiesburg were currently vacant as of July 1, 2007? _____

    Total number? -0-

1 bdrm	2 bdrm	3 bdrm	4 bdrm	5 bdrm

11. Please describe any resident initiatives that are underway, i.e., Resident Councils, participation of Hattiesburg Public Housing residents in management, economic opportunity programs, etc.

    A. Name of Development: BRIANfield HOMES

Describe resident initiative underway or proposed:

Resident Council

B. Name of Development: Robertson Place

Describe resident initiative underway or proposed:

Resident Council

C. Name of Development: New Development

Describe resident initiative underway or proposed:

Resident Council

D. Name of Development:

Describe resident initiative underway or proposed:

12. Please describe any drug elimination programs funded under Hattiesburg Public Housing programs. Please provide the funding source and amount of funding. No funded drug programs

A. Name of Development:

Funding source:

Amount:

Description of program:

B. Name of Development:

Funding source:

Amount:

Description of program:

C. Name of Development: _____

Funding source: _____

Amount: _____

Description of program:

_____

_____

_____

D. Name of Development: _____

Funding source: _____

Amount: _____

Description of program:

_____

_____

_____

13. Please describe any youth sports programs funded under Hattiesburg Public Housing programs. Please provide the funding source and the amount of the funding.

A. Name of Development: No funded YOUTH PROGRAMS

Funding source: _____

Amount: _____

Description of program:

_____

_____

_____

B. Name of Development: _____

Funding source: _____

Amount: _____

Description of program:

_____

_____

_____

C. Name of Development: _____

Funding source: _____

Amount: _____

Description of program:

D. Name of Development: _____

Funding source: _____

Amount: _____

Description of program:

14. Please describe the strategy for improving management of public housing in Hattiesburg.

Professional Development

15. Please describe the strategy for improving the living environment of low and moderate-income persons residing in public housing in Hattiesburg.

Replace older housing stock

16. Please provide a copy of the criteria for eligibility for becoming a resident of public housing.

SEE ATTACHMENT 3

17. How many public housing units are suited for housing the handicapped? 13
HIV/AIDS victims and their families? _____ Elderly? _____
Provide an explanation if necessary:

18. Please explain what, if any, measures (priorities) you take to provide housing for the homeless.
Public Housing Units:

NONE

19. Assuming we can establish the priority housing needs for your waiting lists, what are other priorities of the R~~egional H~~ousing Authority in Hattiesburg?
LOCAL

- Priority #1 (Why and Where?)

What do we expect to accomplish (years 1, 2, & 3).

- Priority # 2 (Why and Where?)

What do we expect to accomplish (years 1, 2, & 3).

- Priority # 3 (Why and Where?)

What do we expect to accomplish (years 1, 2, & 3).

- Priority # 4 (Why and Where?)

What do we expect to accomplish (years 1, 2, & 3).

- Priority # 5 (Why and Where?)

What do we expect to accomplish (years 1, 2, & 3).

- Priority # 6 (Why and Where?)

What do we expect to accomplish (years 1, 2, & 3).

_____

_____

_____

_____

Attachment 1

Annual Statement/Performance and Evaluation Report
Capital Fund Program, Capital Fund Program Replacement Housing Factor and
Capital Fund Financing Program

U.S. Department of Housing and Urban Development
Office of Public and Indian Housing
OMB No. 2577-0226
Expires 4/30/2011

Part II: Supporting Pages

PHA Name: HATTIESBURG	**Grant Type and Number** Capital Fund Program Grant No: MS26P001501-12 CFFP (Yes/ No): NO Replacement Housing Factor Grant No:	**Federal FFY of Grant: 2012**

Development Number Name/PHA-Wide Activities	General Description of Major Work Categories	Development Account No.	Quantity	Total Estimated Cost		Total Actual Cost		Status of Work
				Original	Revised [1]	Funds Obligated[2]	Funds Expended[2]	
	Operations	1406		0				
	Security Contract	1408		80,000				
	Administration	1410		25,000				
	Mod Coordinator	1430		25,000				
	Inspections, Testing, Surveys	1430		5,000				
	Mixed-Finance Development Consultant	1430		50,000				
	Erosion Control, Cut, Trim Trees, Grass, Sod	1450		36,000				
	Indefinite Quantity Contracts:							
	Non Routine Vacancies, Painting, Etc.	1460	40	60,000				
	Cleaning Vacancy Preparation	1460	40	20,000				
	Chronic Pest Control	1460	296	30,000				
	Heaters/Water Heaters	1460	5	5,000				
	Stoves	1465.1	10	3,000				
	Refrigerators	1465.1	16	6,000				
	Non-Dwelling Equipment	1475		12,612				
	GRAND TOTAL			357,612				

[1] To be completed for the Performance and Evaluation Report or a Revised Annual Statement.
[2] To be completed for the Performance and Evaluation Report.

Attachment 3

3. All applications must be made in person by a responsible adult member of the applicant family, who will reside in the household. He/She shall sign the application and certify, subject to civil and criminal penalties, to the accuracy of all statements made therein. The Authority reserves the right to require the signature of any or all adult members of the applicant household. No applications shall be accepted by mail.

4. The Authority will normally take applications from a central location, but reserves the right to establish satellite locations for application taking, so long as all processing is done in a central location.

5. The Authority reserves the right to establish times for taking applications, including by appointment. The Authority staff may at its discretion provide for application interviews outside normal hours when necessary for hardship reasons.

6. Insofar as possible, application interviews shall be conducted in private.

7. In addition to the income. family composition and information unique to each applicant, each application shall indicate the date and time of application and the Authority's determination of eligibility or ineligibility. When the family is eligible, the application shall also record the correct unit size and type; the priority rating; the date of assignment to a dwelling unit and the unit assigned; the date, unit location and reason for rejection for any offers refused by the applicant.

8. Applications shall be updated as applicants report changes in income and family circumstances. All modifications to applications shall be properly documented and the transaction initialed by the staff member making the change.

9. From time to time, the Authority shall purge the application pool of applications no longer actively seeking housing. Normally, this shall be performed by removing applicants who fail to respond to a 'still interested" notice mailed to the last known address on the application. It shall be the sole responsibility of the applicant to inform the Authority of changes in address or other family circumstances which might affect the status of the application.

10. The Authority shall maintain such records as are necessary to document the disposition of all applications and to meet Department of Housing and Urban Development audit requirements.

If the Authority determines the applicant is ineligible, the Authority shall promptly notify the applicant. When requested, and within a reasonable time after the determination is made, the applicant shall be provided an opportunity for an informal hearing.

If a determination has been made that the applicant is eligible and satisfies all requirements for admission, the applicant shall be notified of the approximate date of occupancy insofar as that date can be reasonably determined.

Attachment 2

A - Low Rent Waiting List

Hattiesburg Housing Authority

Effective Date : 7/13/2012

Bedroom Size: ALL

Size	0BR	1BR	2BR	3BR	4BR	5BR	6+BR	TOTAL
Elderly	0	8	0	0	0	0	0	8
Near Elderly	0	0	0	0	0	0	0	0
Handi/Disabled	0	18	3	1	0	0	0	22
Single Fed Disp	0	0	0	0	0	0	0	0
Family	0	100	84	123	0	0	0	307
Hispanic	0	0	0	3	0	0	0	3
White	0	17	11	7	0	0	0	35
Black	0	107	76	117	0	0	0	300
Indian/Alaskan	0	0	0	0	0	0	0	0
Asian	0	1	0	0	0	0	0	1
Pacific Islander	0	0	0	0	0	0	0	0
Mixed	0	0	0	0	0	0	0	0

Recap Chart

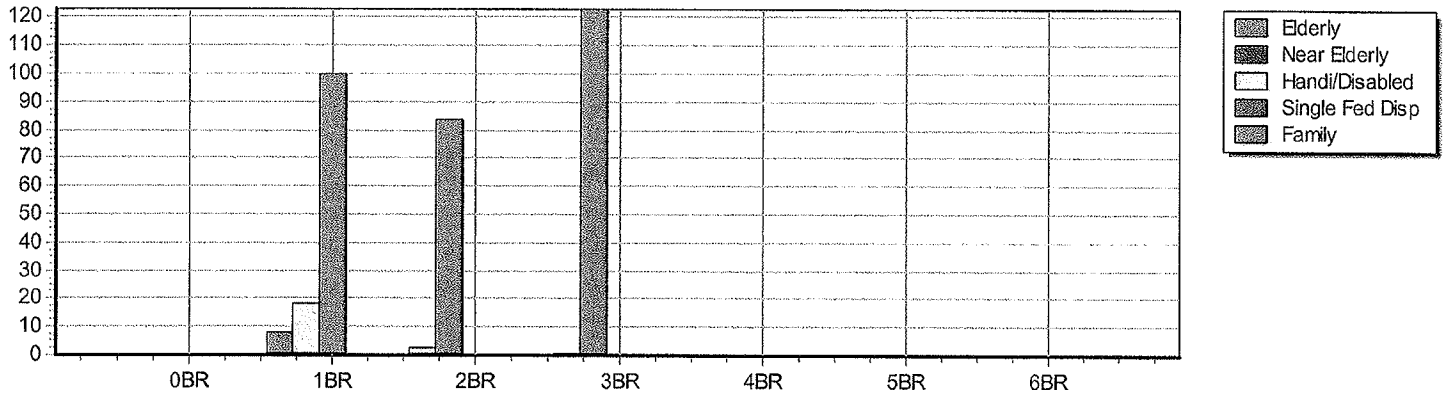

Race

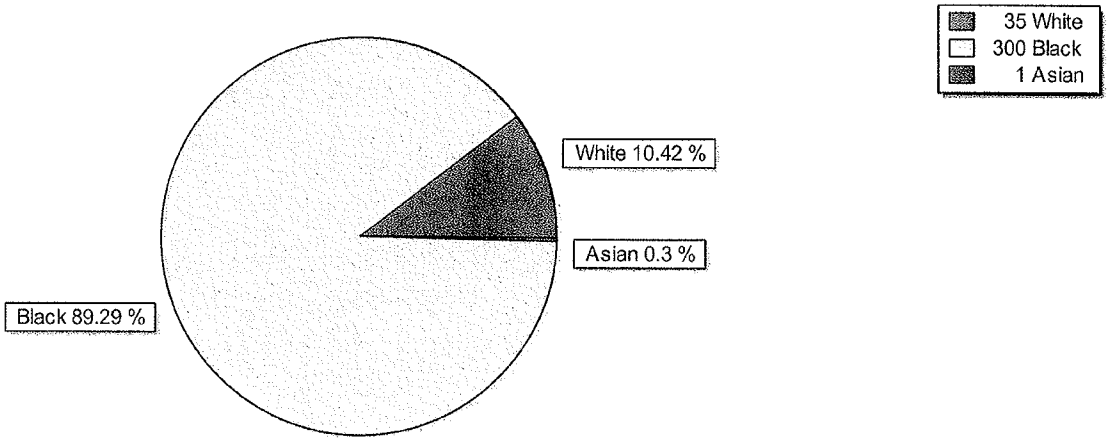

CITY OF HATTIESBURG
FIVE-YEAR CONSOLIDATED PLAN AND 2013 ONE-YEAR ACTION PLAN

The City is in the process of developing its Five-Year Consolidated Plan and 2013 One-Year Action Plan to apply for Community Development Block Grant (CDBG) and HOME Investments Partnerships Program (HOME) funds for Program Year 2013. Any comments that you may have are valued. We appreciate and value all comments toward the development of the Plan. Please provide your comments below.

Name: Jonnie Green Phone: 601-307-8161

Organization: Katie / Dobbs & John St Neighborhood

Address: 711 Dobbs Street Hattiesburg Ms 39401

Comments:

1) Delapodated Housing tear Down and late Kept Clean by City or Owner.

2) (SRO) for Mental ill peoples

3) City own public Buildings Donated for Safe place for Homeless people in this City.

Comments related to this program may be sent to the Department of Federal and State Programs, City of Hattiesburg, P.O. B ox 1898, Hattiesburg, MS 39403, or delivered to City Hall First Floor, Department of Federal and State Programs. Comments will be considered through Friday, July 13, 2012. If additional space is needed, please write on the back of this page.

CITY OF HATTIESBURG
FIVE-YEAR CONSOLIDATED PLAN AND 2013 ONE-YEAR ACTION PLAN

The City is in the process of developing its Five-Year Consolidated Plan and 2013 One-Year Action Plan to apply for Community Development Block Grant (CDBG) and HOME Investments Partnerships Program (HOME) funds for Program Year 2013. Any comments that you may have are valued. We appreciate and value all comments toward the development of the Plan. Please provide your comments below.

Name: Richard Barnett Phone: 601-582-3475

Organization: Breakthrough Community Services, Inc

Address: 1313 Country Club Rd, Hattiesburg MS 39401

Comments:

HOME funds should focused in blited areas rather than around Robinson Place. Organizations buying property in this area has an motive for wanting to use HOME funds in these areas.

Comments related to this program may be sent to the Department of Federal and State Programs, City of Hattiesburg, P.O. B ox 1898, Hattiesburg, MS 39403, or delivered to City Hall First Floor, Department of Federal and State Programs. Comments will be considered through Friday, July 13, 2013. If additional space is needed, please write on the back of this page.

CITY OF HATTIESBURG
FIVE-YEAR CONSOLIDATED PLAN AND 2013 ONE-YEAR ACTION PLAN

The City is in the process of developing its Five-Year Consolidated Plan and 2013 One-Year Action Plan to apply for Community Development Block Grant (CDBG) and HOME Investments Partnerships Program (HOME) funds for Program Year 2013. Any comments that you may have are valued. We appreciate and value all comments toward the development of the Plan. Please provide your comments below.

Name: Mark Creech Phone: (228) 831-2992 ext. 5025

Organization: MS Regional Housing Authority #VIII

Address: P.O. Box 2347 Gulfport, MS 39505

Comments:

- Consider through CDBG/HOME, Security Deposit Assistance, Utility Deposit Assistance, and transition rental assistance.
- Homeownership down payment assistance consideration.
- Consider including MRHA VIII in the Analysis of Impediments Study.

Comments related to this program may be sent to the Department of Federal and State Programs, City of Hattiesburg, P.O. B ox 1898, Hattiesburg, MS 39403, or delivered to City Hall First Floor, Department of Federal and State Programs. Comments will be considered through Friday, July 13, 2013. If additional space is needed, please write on the back of this page.

CITY OF HATTIESBURG
FIVE-YEAR CONSOLIDATED PLAN AND 2013 ONE-YEAR ACTION PLAN

The City is in the process of developing its Five-Year Consolidated Plan and 2013 One-Year Action Plan to apply for Community Development Block Grant (CDBG) and HOME Investments Partnerships Program (HOME) funds for Program Year 2013. Any comments that you may have are valued. We appreciate and value all comments toward the development of the Plan. Please provide your comments below.

Name: Annie Jackson Phone: (601) 582-8891

Organization: South Mississippi Children's Center

Address: P. O. Box 646, Hattiesburg, MS 39403

Comments: I would like to propose a Day Haven in the City, Hattiesburg, which would provide homeless individuals access to "having an address" to receive identification, mail etc. which will assist with employment. This will facilitate individual's ability to become employed in order to afford housing and ultimately permanent housing. This could be operated by Nonprofit or Volunteers

I propose Housing opportunities along a continuum from homelessness or substandard housing to permanent or ownership (via economic opportunities related to housing @ all levels).

In addition, possible assistances for deposits for rental properties or utilities.

Comments related to this program may be sent to the Department of Federal and State Programs, City of Hattiesburg, P.O. B ox 1898, Hattiesburg, MS 39403, or delivered to City Hall First Floor, Department of Federal and State Programs. Comments will be considered through Friday, July 13, 2013. If additional space is needed, please write on the back of this page.

CITY OF HATTIESBURG
FIVE-YEAR CONSOLIDATED PLAN AND 2013 ONE-YEAR ACTION PLAN

The City is in the process of developing its Five-Year Consolidated Plan and 2013 One-Year Action Plan to apply for Community Development Block Grant (CDBG) and HOME Investments Partnerships Program (HOME) funds for Program Year 2013. Any comments that you may have are valued. We appreciate and value all comments toward the development of the Plan. Please provide your comments below.

Name: Tim Rehner Phone: 601-466-4933

Organization: USM SWK – Family Network Partnership.

Address:

Comments: Target areas adjacent to established & sustainable housing efforts like Robertson Place or Briarfield Apts. for housing rehab & removal of blighted buildings & substandard rentals (private). Create a "culture" of housing changes/strengthening. It should result in other neighbors improving their places too.

Invest in ~~of~~ renovation of Eaton school so community activities can be re-established to support feeding programs for the elderly, family nutritional cooking classes, workforce development for homeless population, ~~community~~ youth programs like what FNP did for 15 years.

Comments related to this program may be sent to the Department of Federal and State Programs, City of Hattiesburg, P.O. B ox 1898, Hattiesburg, MS 39403, or delivered to City Hall First Floor, Department of Federal and State Programs. Comments will be considered through Friday, July 13, 2013. If additional space is needed, please write on the back of this page.

CITY OF HATTIESBURG
FIVE-YEAR CONSOLIDATED PLAN AND 2013 ONE-YEAR ACTION PLAN

The City is in the process of developing its Five-Year Consolidated Plan and 2013 One-Year Action Plan to apply for Community Development Block Grant (CDBG) and HOME Investments Partnerships Program (HOME) funds for Program Year 2013. Any comments that you may have are valued. We appreciate and value all comments toward the development of the Plan. Please provide your comments below.

Name: Rossie Anderson-Howze Phone: 601-296-6720

Organization: Off Campus Study Hall - Old Time Art Gallery

Address: 1410 W. 7th Street, Hattiesburg, MS 39401

Comments: I am opening a non-profit located at the above mentioned address. It will be an off campus study Hall for high School and College students. This will be a safe place for students to come and study. I believe this will improve the Community by giving the older youth a positive place to hang out at, which focus on the importance of studying and the Value of Learning. This facility will give the students the opportunity to be Tutored by other students or retired educators. There will be a home setting environment for the youth to come and relax and feel safe. I am sure this facility will benefit the Community for years to come. I would love to ~~[illegible]~~ apply for Grant assistance through your Program - ~~Please Contact me~~ Thanks

Comments related to this program may be sent to the Department of Federal and State Programs, City of Hattiesburg, P.O. B ox 1898, Hattiesburg, MS 39403, or delivered to City Hall First Floor, Department of Federal and State Programs. Comments will be considered through Friday, July 13, 2013. If additional space is needed, please write on the back of this page.

CITY OF HATTIESBURG
FIVE-YEAR CONSOLIDATED PLAN AND 2013 ONE-YEAR ACTION PLAN

The City is in the process of developing its Five-Year Consolidated Plan and 2013 One-Year Action Plan to apply for Community Development Block Grant (CDBG) and HOME Investments Partnerships Program (HOME) funds for Program Year 2013. Any comments that you may have are valued. We appreciate and value all comments toward the development of the Plan. Please provide your comments below.

Name: JANET Baldwin Phone: 601-520-0657

Organization: Oseola McCarty Youth Dev. Center

Address: 601 McSwain St. Hattiesburg, MS 39401

Comments:

Hattiesburg has a great number of homes that are 50+ years old. Most Rehabing of homes are older homes that may require a great bit of environmental remediation such as lead, asbestos, etc. The Limited amount of funding may not allow an dwelling to be brought up to code.
I feel that more allocation of funds in the environmental area for elderly home rehab.

Comments related to this program may be sent to the Department of Federal and State Programs, City of Hattiesburg, P.O. Box 1898, Hattiesburg, MS 39403, or delivered to City Hall First Floor, Department of Federal and State Programs. Comments will be considered through Friday, July 13, 2012. If additional space is needed, please write on the back of this page.

CITY OF HATTIESBURG
FIVE-YEAR CONSOLIDATED PLAN AND 2013 ONE-YEAR ACTION PLAN

The City is in the process of developing its Five-Year Consolidated Plan and 2013 One-Year Action Plan to apply for Community Development Block Grant (CDBG) and HOME Investments Partnerships Program (HOME) funds for Program Year 2013. Any comments that you may have are valued. We appreciate and value all comments toward the development of the Plan. Please provide your comments below.

Name: Janet Baldwin Phone: 601-520-0657

Organization: Oseola McCarty Youth Development Center

Address: 607 McSwain St. Hattiesburg, MS 39401

Comments: Allocation of funds for public service, Non-profit organizations for program services as well as environmental/abatement issues with properties. Specifically, an old school site that is currently operating a community program providing services to youth and children.
This particular site is still experiencing damage of building from Hurricane Katrina. The middle section of site has no Roof and is falling in. Site is in desperate need of asbestos abatement as well as a roof. Our organization has been working w/ youth in community for past 9 years and we need help. Our plan is also to expand economic opportunities in job creation and self employment education and opportunities. Our plan is to create self-employment opportunities for Low/moderate income persons.

Comments related to this program may be sent to the Department of Federal and State Programs, City of Hattiesburg, P.O. B ox 1898, Hattiesburg, MS 39403, or delivered to City Hall First Floor, Department of Federal and State Programs. Comments will be considered through Friday, July 13, 2013. If additional space is needed, please write on the back of this page.

CITY OF HATTIESBURG
FIVE-YEAR CONSOLIDATED PLAN AND 2013 ONE-YEAR ACTION PLAN

The City is in the process of developing its Five-Year Consolidated Plan and 2013 One-Year Action Plan to apply for Community Development Block Grant (CDBG) and HOME Investments Partnerships Program (HOME) funds for Program Year 2013. Any comments that you may have are valued. We appreciate and value all comments toward the development of the Plan. Please provide your comments below.

Name: [illegible] Phone: 601 [illegible]

Organization: [illegible]

Address: [illegible] Hattiesburg, MS 39401

Comments: [illegible]

Comments related to this program may be sent to the Department of Federal and State Programs, City of Hattiesburg, P.O. Box 1898, Hattiesburg, MS 39403, or delivered to City Hall First Floor, Department of Federal and State Programs. Comments will be considered through Friday, July 13, 2012. If additional space is needed, please write on the back of this page.

CITY OF HATTIESBURG
FIVE-YEAR CONSOLIDATED PLAN AND 2013 ONE-YEAR ACTION PLAN

The City is in the process of developing its Five-Year Consolidated Plan and 2013 One-Year Action Plan to apply for Community Development Block Grant (CDBG) and HOME Investments Partnerships Program (HOME) funds for Program Year 2013. Any comments that you may have are valued. We appreciate and value all comments toward the development of the Plan. Please provide your comments below.

Name: Michael Pascarelli Phone: 601 466 2985

Organization: HABITAT FOR HUMANITY

Address: PO Box 1092 HATTIESBURG MS 39403

Comments: 1ST CONTINUE TO FUND DPA FOR OUR HOME OWNERS.
WOULD LIKE A SOURCE OF FUNDING TO COVER SALARY OF OUR FAMILY SUPPORT MANAGER THAT PROVIDES EDUCATIONAL CLASSES TO ALL LOW TO MODERATE INCOME FAMILIES. THE POSITION ALSO COVERS CASE WORKING FOR OUR FAMILIES WITH BUDGETS AND FINANCIAL HELP.
WOULD LIKE TO SEE A SUB DIVISION BUILT TO HOUSE MIXED INCOMES
WOULD LIKE TO HAVE A GRANT AVAILABLE TO REHAB A STRUCTURE TO OPEN A RESTORE TO SUPPORT OUR NON PROFIT BUILDING CAPACITY

Comments related to this program may be sent to the Department of Federal and State Programs, City of Hattiesburg, P.O. B ox 1898, Hattiesburg, MS 39403, or delivered to City Hall First Floor, Department of Federal and State Programs. Comments will be considered through Friday, July 13, 2013. If additional space is needed, please write on the back of this page.

CITY OF HATTIESBURG
FIVE-YEAR CONSOLIDATED PLAN AND 2013 ONE-YEAR ACTION PLAN

The City is in the process of developing its Five-Year Consolidated Plan and 2013 One-Year Action Plan to apply for Community Development Block Grant (CDBG) and HOME Investments Partnerships Program (HOME) funds for Program Year 2013. Any comments that you may have are valued. We appreciate and value all comments toward the development of the Plan. Please provide your comments below.

Name: Cassie Hicks Phone: 601-266-6038

Organization: The University of Southern Mississippi Institute for Disability Studies

Address: 118 College Drive #5163 Hattiesburg, MS. 39406-0001

Comments:

Recommend the City of Hattiesburg consider hiring a ADA staff person

Recommend the City of Hattiesburg seek other funding sources for home owner rehab.

Recommend the City of Hattiesburg hosts a city-wide seminar to educate residents on fair housing laws

Comments related to this program may be sent to the Department of Federal and State Programs, City of Hattiesburg, P.O. B ox 1898, Hattiesburg, MS 39403, or delivered to City Hall First Floor, Department of Federal and State Programs. Comments will be considered through Friday, July 13, 2012. If additional space is needed, please write on the back of this page.

CITY OF HATTIESBURG
FIVE-YEAR CONSOLIDATED PLAN AND 2013 ONE-YEAR ACTION PLAN

The City is in the process of developing its Five-Year Consolidated Plan and 2013 One-Year Action Plan to apply for Community Development Block Grant (CDBG) and HOME Investments Partnerships Program (HOME) funds for Program Year 2013. Any comments that you may have are valued. We appreciate and value all comments toward the development of the Plan. Please provide your comments below.

Name: __Rebecca Brown_____ Phone: __601.545.2137_____

Organization: __Southern MS Planning and Development District-Workforce Development_____

Address: _700 Hardy Street, Hattiesburg, MS 39401_____

Comments: _____

BACKGROUND: Southern Mississippi Planning and Development District serves as the fiscal agent for the Twin Districts Workforce Area (TDWA). This is one of four workforce areas in the state designed to provide locally driven employment and training services to our citizens. Hattiesburg is one of the largest metropolitan areas within our district. TDWA utilizes Department of Labor funds as outlined in the Workforce Investment Act of 1998 to provide market-relevant training opportunities and employment services to our citizens with the end goal of helping them to achieve self-sufficiency.

Two of the primary ways that we serve our customers are through On-the-Job Training (OJT), Individual Training Accounts (ITAs) that are provided through the local Hattiesburg WIN Job Center, operated by the Department of Employment Security. OJT funds actually reimburse employers for a portion of wages paid to new employees during a set training period. This sometimes helps employers to create positions that they may not have afforded otherwise. ITAs are used to provide tuition for short-term training programs for high-demand occupations. The mission of the ITA program is to quickly and effectively provide job-minded training and educational programs to give our citizens the skills necessary to work and excel in today's job climate.

In addition to OJT and ITA programs, TDWA also funds several youth programs. The Hattiesburg youth program provides a holistic approach to youth education in the form of GED classes, career counseling and placement assistance. SMPDD directly operates this program housed conveniently across Highway 49 from The University of Southern Mississippi.

CLIENTELE BASE: Adults, youth and dislocated workers; those seeking employment whether unemployed or underemployed; all Mississippians wishing to advance in vocational skill level to become self-sufficient or increase standard of living; hard-to-serve populations. Many of our customers live at or below the poverty line. We have served many individuals who are staying briefly in a shelter such as the Salvation Army or in transitional housing such as Oak Arbor (primarily serving residents with addiction issues and a history of military service).

PARTNERSHIPS: TDWA works closely with a variety of workforce partners and community services. The Department of Vocational Rehabilitation, Pearl River Community College and Job Corps are direct workforce partners. TDWA and WIN Job Centers also work with the Area Agency on Aging (also operated by SMPDD), Oak Arbor residential facility, Camp Shelby, local churches, Department of Human Services and other entities to mutually refer participants to the local resources that can help them achieve their short term goals, which can be as simple as daily survival and their long term goals such as job attainment, career advancement or entrepreneurship.

Comments related to this program may be sent to the Department of Federal and State Programs, City of Hattiesburg, P.O. B ox 1898, Hattiesburg, MS 39403, or delivered to City Hall First Floor, Department of Federal and State Programs. Comments will be considered through Friday, July 13, 2012. If additional space is needed, please write on the back of this page.

Ellard, Andrew

From: Michele Schraeder <Missy.Schraeder@usm.edu>
Sent: Monday, June 25, 2012 1:30 PM
To: Tate, Franklyn; Ellard, Andrew; Bratcher, Anita
Subject: Proposal for the 5-year consolidated plan

Good afternoon,
Thank you for inviting us to last week's meeting to discuss the city's community development activities for the next five years. Below, please find my comments on the urgent need for literacy.

According to the National Center for Education Statistics in their 2003 National Assessment of Adult Literacy, 14% of adults in Mississippi ages 16 and older lack basic literacy skills. This means that these individuals either cannot read or cannot read well enough to fill out a job application. In 2011, 19% of 4th grade students in Mississippi scored below basic on the reading portion of the National Assessment of Educational Progress. This rate of illiteracy is alarming and poses an urgent need in our state and our community. Some additional statistics from the International Dyslexia Association show that

- ✓ Reading disabilities affect 1 child in 5.
- ✓ More than 38.7% of children with learning disabilities drop out of high school compared to 11% of the general population.
- ✓ 50% of Americans are unable to read an 8th grade-level book.
- ✓ 50% percent of the nations unemployed youths age 16-21 are functionally illiterate, with virtually no prospects of obtaining jobs.
- ✓ 60% of America's prisons inmates are illiterate, and 85% of all juvenile offenders have reading problems.
- ✓ Youths who are not able to read and write exhibit signs of low self-esteem and lack of confidence.

Based on the information above, we, at the DuBard School for Language Disorders at The University of Southern Mississippi , believe that increasing literacy skills should be viewed as an urgent need in our community when developing the five-year consolidated plan for 2013-2017.

The DuBard School for Language Disorders at The University of Southern Mississippi has been serving children and adults with oral and written language disorders (including reading disorders) since 1961. Each year, our services include full-time public school enrollment for approximately 80 students ages 3-13 as well as outclient services for approximately 25 children and adults. In addition to providing these services, the DuBard School trains educators in the use of a phonetic, multisensory method that is appropriate for students with oral and written language disorders as well as for students in general education grades K-2. This training takes place both on campus at Southern Miss as well as in sites across the United States. The training program of the DuBard School for Language Disorders is accredited at all levels by the International Multisensory Structured Language Education Council (www.imslec.org) and meets the requirements of the National Reading Panel for a scientifically-based reading program.

The staff at the DuBard School for Language Disorders would love to talk with members of the City Council of Hattiesburg to discuss how we could serve as a resource in helping Hattiesburg to increase the literacy skills of all its citizens.

Please feel free to contact me if you have questions. Thank you .

Missy

Missy Schraeder, M.S., CCC-SLP, CALT, QI
Professional Development Coordinator

Southern Miss DuBard School for Language Disorders
118 College Drive #5215
Hattiesburg, MS 39406-0001
601-266-5223
601-266-6763 (fax)
www.usm.edu/dubard

RECORD OF PUBLIC COMMENT

The Hattiesburg City Council publicly approved the Notice of Availability and officially opened a Comment Period related to the 2013-2017 Consolidated Plan and 2013 Action Plan at its September 18, 2012 meeting, with comments to be accepted through October 22, 2012. The notice was published in the Hattiesburg American, a newspaper of general circulation, on September 21, 2012. Included in the notice was an invitation to provide comments in writing to City Hall through October 22, 2012.

During the Public Comment Period, two written comments were received – both from agencies advocating for affordable housing targeted to the homeless, the disabled, and persons living with HIV/AIDS. Additionally, it is noted that during the comment period, program staff experienced an increase in interest via application and telephone inquiry, in the HOME Down Payment Assistance Program. Written comments are attached.

Additional consideration for both Down Payment Assistance and affordable housing options for homeless persons and families, residents with disabilities, and people living with HIV/AIDS..

Ellard, Andrew

From: Kathy Garner <asc@megagate.com>
Sent: Thursday, October 18, 2012 3:08 PM
To: Ellard, Andrew
Cc: jheweezy@gmail.com
Subject: Comments - 2012 Consolidated Plan Action Plan for the City of Hatatiesburg

Importance: High

AIDS SERVICES COALITION

Post Office Box 169
Hattiesburg, MS 39403-0169
Phone: (601)450-4286

October 18, 2012

Mr. Andrew Ellard
City of Hattiesburg
Department of Federal Programs
P.O. Box 1898
Hattiesburg, MS 39403-1898

RE: 2012 City of Hattiesburg Consolidated Plan- Action Plan

Dear Mr. Ellard:

I wanted to take time to comment on the Consolidated Plan -2012 Action Plan for the City of Hattiesburg. The City of Hattiesburg has witnessed an increase in homelessness as is evidenced by the CoC Point in Time Count for the area of 31% between 2009 and 2011 (*Mississippi United to End Homelessness, 2009 and 2011 PIT counts*). This is unacceptable.

My agency works with persons who are living with or at high risk of HIV infection. Persons living with HIV/AIDS who are homeless are five times more likely to die of their disease as those who are not homeless. This makes housing, literally, a life or death issue for our clients. Mississippi is 6th in the United States in the rate of new infections and Forrest County is 5th in the rate of new infections in the state. Our Ryan White Clinic, Southeast MS Rural Health Initiative, serves 670 persons living with HIV, the vast majority of those living in the Hattiesburg/Forrest County area.

HIV/AIDS and homelessness are intricately related. The costs of health care and medications for people living with HIV/AIDS (PLWHA) are often too high for people to keep up with. In addition, PLWHA are in danger of losing their jobs due to discrimination or as a result of frequent health-related

absences. As a result, up to 50% of PLWHA in the United States are at risk of becoming homeless, according to the National Alliance to End Homelessness. In addition, the conditions of homelessness may increase the risk of contracting HIV. A disproportionately large number of homeless people suffer from substance abuse disorders.

I say all that to say that, housing IS health for the homeless and, more specifically, for the homeless living with HIV/AIDS. I ask that the City of Hattiesburg dedicate its resources within its Action Plan to the development of affordable housing options for these populations, including, but not limited to, purchase and renovation of units. If you have any questions, please feel free to call me.

Sincerely,

Kathy Garner
Executive Director

Kathryn M. Garner, Executive Director
AIDS Services Coalition
P.O. Box 169
Hattiesburg, MS 39403-0169
601-450-4286
Fax 601-450-4285
www.121havenhouse.org

"Thou shalt not be a perpetrator; thou shalt not be a victim; and thou shalt never, but never, be a bystander."
Washington Holocaust Museum

This communication, and files which may be attached, are intended for the use of the addressee(s) ONLY and may contain confidential or legally privileged information. Any use, distribution or copying in whatever manner of this information is prohibited.

muteh
Mississippi United To End Homelessness

ADDRESS
5 Old River Place Suite 205
Jackson, MS 39202
MAILING ADDRESS
PO Box 24147
Jackson, MS 39225

PHONE
office 601-960-0557
fax 866.551.0916
WEBSITE
muteh.org

October 18, 2012

Mr. Andrew Ellard
City of Hattiesburg
Department of Federal Programs
P.O. Box 1898
Hattiesburg, MS 39403-1898

RE: 2012 City of Hattiesburg Consolidated Plan- Action Plan

Dear Mr. Ellard:

Mississippi United to End Homelessness is the agency that serves as the lead in the Balance of State Continuum of Care. We submit an annual application to HUD to provide supportive housing for the homeless in our 71 county service area at a funding level of $3 million dollars. We are responsible for conducting a point in time count of the homeless, compiling a statewide inventory of housing that is available to the homeless population and administering an online tracking system that is available to all homeless service providers in our service area.

The City of Hattiesburg has witnessed an increase in homelessness as is evidenced by our CoC Point in Time Count of 31% between 2009 and 2011. In contrast to that, the housing inventory has not increased to meet the needs of those who we serve. The disabled and HIV populations are target groups that concern us greatly due to the lack of housing available to meet their specific needs.

We would support any efforts that the City of Hattiesburg undertakes to dedicate its resources within its Action Plan to the development of affordable housing options for these populations, including, but not limited to, purchase and renovation of units.

If you have any questions, please feel free to call me.

Sincerely,

Louise Meyer

Louise Meyer
Executive Director

APPENDIX A

Public Participation Announcements:

- Notice of Public Hearings, Availability of Information, and Public Comment Period
- Proof of Publication – Notice of Public Hearings, Availability of Information, and Public Comment Period
- Letter to organizations, inviting participation in an Interagency Meeting
- Letter to faith-based organizations, inviting participation in upcoming Public Hearings
- Notice of Availability of the Draft 2013-2017 Consolidated Plan and 2013 Action Plan, and opening of Public Comment Period
- Proof of Publication – Notice of Availability of the Draft 2013-2017 Consolidated Plan and 2013 Action Plan, and opening of Public Comment Period

NOTICE OF PUBLIC HEARINGS and
NOTICE OF AVAILABILITY OF INFORMATION
ATTENTION: ALL HATTIESBURG, MISSSISSIPPI RESIDENTS

NOTICE is hereby given that the City of Hattiesburg Department of Federal & State Programs has scheduled public hearings for the purpose of affording citizens of Hattiesburg an opportunity to present their views on the following.

2013 - 2017 Five-Year Consolidated Plan

Citizens of Hattiesburg are invited to present their views and proposals (orally and in writing) as to the housing needs, community development needs, and supportive housing needs of the City of Hattiesburg and to provide citizens an opportunity to participate in the planning, development and implementation of the City's 2013-2017 Five-Year Consolidated Plan, 2013 One-Year Action Plan (a component of the Five-Year Consolidated Plan) and Analysis of Impediments to Fair Housing Choices in Hattiesburg in connection with the Community Development Block Grant (CDBG) and HOME Investment Partnerships (HOME).

The hearings are scheduled for the following dates and locations:

Thursday, June 28, 2012
Ward 4 –Jackie Dole Sherrill Community Center, 220 West Front Street, Hattiesburg
Consolidated Plan Public Hearing – 6:00 p.m.

Thursday, July 5, 2012
Ward 5 – Danny Hinton Community Center, Palmer's Crossing
Consolidated Plan Public Hearing – 6:00 p.m.

Monday, July 9, 2012
Ward 2 – C.E. Roy Community Center, 300 East 5th Street, Hattiesburg
Consolidated Plan Public Hearing – 6:00 p.m.

Tuesday, July 10, 2012
Ward 1 – Lake Terrace Convention Center, One Convention Center Plaza, Hattiesburg
Consolidated Plan Public Hearing – 6:00 p.m.

Thursday, July 12, 2012
Ward 3 – Thames Elementary School, 2900 Jamestown Rd., Hattiesburg, MS
Consolidated Plan Public Hearing – 6:00 p.m.

ALL interested citizens, particularly those of low, very low and extremely low income, minorities, residents of public housing, and those with mobility, visual and hearing impediments, are urged to attend. If you should have any questions regarding these hearings, please contact the Department of Federal & State Programs at (601) 554-1006.

Availability of Information

Parties interested in additional information regarding the U.S. Department of Housing & Urban Development's Community Development Block Grant (CDBG) or Home Investment Partnerships (HOME) Programs, or the City of Hattiesburg's participation as a CDBG and HOME Grantee are urged to contact the City's Department of Federal & State Programs at (601) 554-1006, or to make inquiries at City Hall – 200 Forrest Street, Hattiesburg, MS 39401.

Consideration

The City will consider in this phase of the planning process, any comments or views of citizens, agencies or units of local government received in writing and orally at any of the scheduled Public Hearings. Written comments will also be accepted in the Department of Federal & State Programs through Friday, July 13, 2012. A summary of any comments or reviews accepted will be attached to the final plan.

Comments related to this NOTICE may be sent to or delivered to City Hall, First Floor, Community Development/Department of Federal and State Programs, 200 Forrest Street, Hattiesburg, MS 39401.

If you have any questions regarding this information, please contact the Department at (601) 554-1006.

CITY OF HATTIESBURG, MISSISSIPPI

BY: _____
CITY CLERK

(SEAL)

Johnny L. DuPree, Mayor

PUBLISH Twice in the Non-Legal Section: Friday, June 8, 2012 and; Friday June 15, 2012

PROOF OF PUBLICATION
THE STATE OF MISSISSIPPI
FORREST COUNTY

PASTE PROOF HERE

H12998
CITY OF HBURG,
0200406510
CDBG NOTICE OF PUBLIC HEARINGS

NOTICE OF PUBLIC HEARINGS and NOTICE OF AVAILABILITY OF INFORMATION ATTENTION: ALL HATTIESBURG, MISSSISSIPPI RESIDENTS

NOTICE is hereby given that the City of Hattiesburg Department of Federal & State Programs has scheduled public hearings for the purpose of affording citizens of Hattiesburg an opportunity to present their views on the following.

2013 - 2017 Five-Year Consolidated Plan
Citizens of Hattiesburg are invited to present their views and proposals (orally and in writing) as to the housing needs, community development needs, and supportive housing needs of the City of Hattiesburg and to provide citizens an opportunity to participate in the planning, development and implementation of the City's 2013-2017 Five-Year Consolidated Plan, 2013 One-Year Action Plan (a component of the Five-Year Consolidated Plan) and Analysis of Impediments to Fair Housing Choices in Hattiesburg in connection with the Community Development Block Grant (CDBG) and HOME Investment Partnerships (HOME).

The hearings are scheduled for the following dates and locations:

Thursday, June 28, 2012
Ward 4 -Jackie Dole Sherrill Community Center, 220 West Front Street, Hattiesburg
Consolidated Plan Public Hearing - 6:00 p.m.

Thursday, July 5, 2012
Ward 5 - Danny Hinton Community Center, Palmer's Crossing
Consolidated Plan Public Hearing - 6:00 p.m.

Monday, July 9, 2012
Ward 2 - C.E. Roy Community Center, 300 East 5th Street, Hattiesburg
Consolidated Plan Public Hearing - 6:00 p.m.

Tuesday, July 10, 2012
Ward 1 - Lake Terrace Convention Center, One Convention Center Plaza, Hattiesburg
Consolidated Plan Public Hearing - 6:00 p.m.

Thursday, July 12, 2012
Ward 3 - Thames Elemeatary School, 2900 Jamestown Rd., Hattiesburg, MS
Consolidated Plan Public Hearing - 6:00 p.m.

ALL interested citizens, particularly those of low, very low and extremely low income, minorities, residents of public housing, and those with mobility, visual

Availability of Information
Parties interested in additional information regarding the U.S. Department of Housing & Urban Development's Community Development Block Grant (CDBG) or Home Investment Partnerships (HOME) Programs, or the City of Hattiesburg's participation as a CDBG and HOME Grantee are urged to contact the City's Department of Federal & State Programs at (601) 554-1006, or to make inquiries at City Hall - 200 Forrest Street, Hattiesburg, MS 39401.

Consideration
The City will consider in this phase of the planning process, any comments or views of citizens, agencies or units of local government received in writing and orally at any of the scheduled Public Hearings. Written comments will also be accepted in the Department of Federal & State Programs through Friday, July 13, 2012. A summary of any comments or reviews accepted will be attached to the final plan.

Comments related to this NOTICE may be sent to or delivered to City Hall, First Floor, Community Development/Department of Federal and State Programs, 200 Forrest Street, Hattiesburg, MS 39401.

If you have any questions regarding this information, please contact the Department at (601) 554-1006.

CITY OF HATTIESBURG, MISSISSIPPI

BY: Eddie R Myers/s/
CITY CLERK

(SEAL)

Johnny L. DuPree, Mayor

PUBLISH: June 9, 2012, June 15, 2012

0200406510-01

PERSONALLY appeared before me, the undersigned notary public in and for Forrest County, Mississippi,

CRYSTAL HORTON

an authorized clerk of the HATTIESBURG AMERICAN, a daily newspaper published in the City of Hattiesburg, Forrest County, Mississippi who, being duly sworn, states that the notice, a true copy of which is hereto attached, appeared in the issues of said newspaper as follows:

6/9/2012
6/9/2012
6/15/2012

Size: 643 words / 1.00 col. x 167.00 lines
Published: 2 time(s)
Total: $150.46

Signed _____
Authorized Clerk of
The Hattiesburg American

SWORN to and subscribed before me on 6/15/2012.

Jennifer J. Brogdon
Notary Public

June 15, 2012
Date

(SEAL)
STATE OF MISSISSIPPI
JENNIFER J. BROGDON
NOTARY PUBLIC
ID# 90911
Commission Expires
September 5, 2012
FORREST COUNTY

Mayor
Johnny L. DuPree, Ph.D.

Council - Ward 1	Council - Ward 2	Council - Ward 3	Council - Ward 4	Council - Ward 5
Kim Bradley	*Deborah Denard Delgado*	*Carter Carroll*	*Dave J. Ware, II*	*Henry Naylor*

June 12, 2012

To Whom It May Concern:

You are invited to participate in an interagency meeting with the City of Hattiesburg and several area non-profits for the purpose of identifying and prioritizing the City's Community Development activities for the next five years. The meeting will be held June 20, 2012 at 10:00 a.m. at the Historic Train Depot Community Room.

Background: The City of Hattiesburg, an "entitlement community," as designated by the U.S. Department of Housing & Urban Development (HUD), receives an annual grant in Community Development Block Grant (CDBG) and Home Investment Partnership (HOME) funding. The City, with participation from the public, is required to create a Five-Year Consolidated Plan that identifies needs and priorities as they relate to low- to moderate-income individuals and low- to moderate-income neighborhoods and as they relate to affordable housing. The Consolidated Plan will stress higher-priority needs, which are expected to be addressed in the five-year period, and will also include lesser-priority needs which may be undertaken.

The Five-Year Consolidated Plan serves as the basis for each One-Year Annual Action Plan during the 2013-2017-time period. The Annual Action Plans serve as more specific blueprints for what activities will be undertaken in a coming year. The 2013 Action Plan will be a component of the Five-Year Consolidated Plan, and each subsequent Annual Action Plan will involve similar public participation.

The interagency meeting is an opportunity to get input from our professional community development partners that are familiar with the needs of the community from a practical application standpoint. In addition to this meeting, the City will host five (5) Public Hearings over the next month to invite input from the public. Suggestions and comments received at all of the meetings, as well as those received in writing by Friday, July 13, 2012 will be taken into consideration in the preparation of the Five-Year Consolidated Plan.

We hope that you or another representative of your organization can attend as your participation is sincerely appreciated. If you are unable to attend, we encourage you to submit your suggestions or other input in writing so that they may be taken into consideration.

If you have any questions, or if there is any further information that we can provide, please contact me at (601) 554-1006.

Sincerely,

Franklyn L. Tate, Director
Federal & State Programs

AE

Mayor
Johnny L. DuPree, Ph.D.

Council - Ward 1	Council - Ward 2	Council - Ward 3	Council - Ward 4	Council - Ward 5
Kim Bradley	*Deborah Denard Delgado*	*Carter Carroll*	*Dave J. Ware, II*	*Henry Naylor*

June 15, 2012

To Whom It May Concern:

You are invited to participate in one of five upcoming Public Hearings for the purpose of identifying and prioritizing the City's Community Development activities for the next five years. Meetings are scheduled at the following dates, times, and locations:

- Thursday, June 28, 2012 – 6:00 p.m. – Jackie Dole Sherrill Community Center
- Thursday, July 5, 2012 – 6:00 p.m. – Danny Hinton Community Center
- Monday, July 9, 2012 – 6:00 p.m. – C.E. Roy Community Center
- Tuesday, July 10, 2012 – 6:00 p.m. – Lake Terrace Convention Center
- Thursday, July 12, 2012 – 6:00 p.m. – Thames Elementary School

Background: The City of Hattiesburg, an "entitlement community," as designated by the U.S. Department of Housing & Urban Development (HUD), receives an annual grant in Community Development Block Grant (CDBG) and Home Investment Partnership (HOME) funding. The City, with participation from the public, is required to create a Five-Year Consolidated Plan that identifies needs and priorities as they relate to low- to moderate-income individuals and low- to moderate-income neighborhoods and as they relate to affordable housing. The Consolidated Plan will stress higher-priority needs, which are expected to be addressed in the five-year period, and will also include lesser-priority needs which may be undertaken.

The Five-Year Consolidated Plan serves as the basis for each One-Year Annual Action Plan during the 2013-2017-time period. The Annual Action Plans serve as more specific blueprints for what activities will be undertaken in a coming year. The 2013 Action Plan will be a component of the Five-Year Consolidated Plan, and each subsequent Annual Action Plan will involve similar public participation.

Suggestions and comments received at all of the meetings, as well as those received in writing by Friday, July 13, 2012 will be taken into consideration in the preparation of the Consolidated Plan.

We hope that you or another representative of your organization can attend as your participation is sincerely appreciated. If you are unable to attend, we encourage you to submit your suggestions or other input in writing so that they may be taken into consideration.

If you have any questions, or if there is any further information that we can provide, please contact me at (601) 554-1006.

Sincerely,

Franklyn L. Tate, Director
Federal & State Programs

AE

NOTICE OF AVAILABILITY
2013-2017 CONSOLIDATED PLAN & 2013 ACTION PLAN – DRAFT
HOUSING AND COMMUNITY DEVELOPMENT BLOCK GRANT (CDBG & HOME) PROGRAMS
ATTENTION: ALL HATTIESBURG, MISSSISSIPPI RESIDENTS

The City of Hattiesburg has completed a DRAFT VERSION of the 2013-2017 Consolidated Plan. The plan was developed through a coordinated community process, identifying housing, homelessness, housing support services, and non-housing needs in the City of Hattiesburg. This Plan provides a basis and strategy for the use of federal funds granted to the City by the U.S. Department of Housing and Urban Development (HUD) under the Community Development Block Grant (CDBG) and Home Investment Partnership (HOME). The accompanying 2013 One-Year Action Plan serves as the City's application for the first year of its annual entitlement allocations from HUD under this new five-year plan.

The City anticipates receipt of Community Development Block Grant (CDBG) and HOME Investment Partnerships Program funds from the U.S. Department of Housing and Urban Development in January 2013 or soon thereafter. These funds are estimated to total approximately $800,000. The funds will be used to meet the primary objectives of the Housing and Urban Development Act of 1974, as amended, by providing access to affordable, decent, safe and sanitary housing and a suitable living environment and expanding economic opportunities for persons, of low and moderate-income.

The Draft Consolidated Plan and 2013 Action Plan on housing and community development needs will be available for review beginning September 21, 2012, between the hours of 8 a.m. and 5 p.m., (or as existing business hours may dictate) Monday through Friday, at the following locations:

City Hall
200 Forrest St.
City Clerk's Office
Hattiesburg, MS 39401

Hattiesburg Public Library
329 Hardy St.
Hattiesburg, MS 39401

Jackie Dole Sherrill
Community Center
220 W. Front St.
Hattiesburg, MS 39401

C.E. Roy Community Center
300 East 5th St.
Hattiesburg, MS 39401

Forrest County Court House
641 Main St.
Hattiesburg, MS 39401

The Plan will also be posted on the City's website at http://government.hattiesburgms.com/city-departments/federal-a-state-programs/community-development.

The City expects to receive a CDBG entitlement grant of approximately $577,000. The City proposes to budget these funds for the following activities: Program Administration ($115,400); Public Services ($65,000); Demolition of Substandard Structures ($50,000); Façade Improvement ($30,000); Microenterprise Assistance ($30,000) and Housing Repair or Rehabilitation ($286,600).

The City expects to receive a HOME entitlement grant of approximately $276,000. The City proposes to budget these funds for the following activities: HOME Administration ($27,600); Community Housing Development Organization Set-aside ($41,400); Down Payment Assistance ($20,000) and Housing Rehabilitation ($187,000).

The City will consider any comments or views of citizens, agencies or units of local government received in writing. Written comments will be accepted in the Department of Federal & State Programs through Monday, October 22, 2012. A summary of any comments or reviews accepted will be attached to the final Plan submitted to HUD. Final submission to HUD must take place on or before November 15, 2012.

Comments related to this NOTICE may be sent to or delivered to City Hall, First Floor, Community Development/Department of Federal and State Programs, 200 Forrest Street, Hattiesburg, MS 39401.

If you have any questions regarding this information, please contact the Department at (601) 554-1006.

CITY OF HATTIESBURG, MISSISSIPPI

BY: _____
CITY CLERK

(SEAL)

Johnny L. DuPree, Mayor

PUBLISH in the Non-Legal Section: Friday, September 21, 2012

H12998
PASTE PROOF HERE
2013-2017 CON PLAN

NOTICE OF AVAILA
2013-2017 CONSOLIDATED PLAN & 20
HOUSING AND COMMUNITY DEVELOPMENT BLOC
ATTENTION: ALL HATTIESBURG, MI

The City of Hattiesburg has completed a DRAFT VERSION of the 2013-2017 Consolidated Plan, process, identifying housing, homelessness, housing support services, and non-housing needs in the City of Hattiesbu eral funds granted to the City by the U.S. Department of Housing and Urban Development (HUD) under the Communit artnership (HOME). The accompanying 2013 One-Year Action Plan serves as the City's application for the first year o w five-year plan. The City anticipates receipt of Community Development Block Grant (CDBG) and HOME Investmen Housing and Urban Development in January 2013 or soon thereafter. These funds are estimated to total approxima y objectives of the Housing and Urban Development Act of 1974, as amended, by providing access to affordable, dec nent and expanding economic opportunities for persons, of low and moderate-income.
The Draft Consolidated Plan and 2013 Action Plan on housing and community development needs between the hours of 8 a.m. and 5 p.m., (or as existing business hours may dictate) Monday through Friday, at the f

City Hall 200 Forrest St. City Clerk's Office Hattiesburg, MS 39401	Hattiesburg Public Library 329 Hardy St. Hattiesburg, MS 39401	Jackie Dole Sherrill Community Center 220 W. Front St. Hattiesburg, MS 39401	ty Court House Main St. g, MS 39401

The Plan will also be posted on the
http://government.hattiesburgms.com/city-departments/federal

The City expects to receive a CDBG entitlement grant of approximately $577,000. The City proposes to bud ation ($115,400); Public Services ($65,000); Demolition of Substandard Structures ($50,000); Façade Improvement ($30,000); Microe ation ($286,600). The City expects to receive a HOME entitlement grant of approximately $276,000. The City proposes to budg n ($27,600); Community Housing Development Organization Set-aside ($41,400); Down Payment Assistance ($20,000) and Housing Re The City will consider any comments or views of citizens, agencies or units of local government d in the Department of Federal & State Programs through Monday, October 22, 2012. A summary of any comments or mitted to HUD. Final submission to HUD must take place on or before November 15, 2012.
Comments related to this NOTICE may be sent to or delivered to City Hall, First Floor, Community Development, Hattiesburg, MS 39401.

If you have any questions regarding this information, please c

TIESBURG, MISSISSIPPI

Johnny L. DuPree, Mayor
PUBLISH: September 21, 2012

CITY CLERK

HA-0200417295

Proof of Publication
The State of Mississippi
Forrest County

PERSONALLY appeared before me, the undersigned notary public in and for Forrest County, Mississippi,

STEVIE HUDSON

An authorized clerk of the HATTIESBURG AMERICAN, a daily newspaper published in the City of Hattiesburg, Forrest County, Mississippi who, being duly sworn, states that the notice, a true copy of which is hereto attached, appeared in the issues of said newspaper as follows:

Date of Publication:

September 21, 2012

Size: 3.0X4.00"
Issues: 1
Total: $132.60

Signed:
Stevie Hudson
Authorized Clerk
Of the Hattiesburg American

Jennifer J. Brogdon
Notary Public

Sworn to and subscribed before me on

September 21, 2012

STATE OF MISSISSIPPI
NOTARY PUBLIC
ID # 90911
JENNIFER J. BROGDON
Commission Expires
Sept. 4, 2016
FORREST COUNTY

SF 424

The SF 424 is part of the CPMP Annual Action Plan. SF 424 form fields are included in this document. Grantee information is linked from the 1CPMP.xls document of the CPMP tool.

SF 424

Complete the fillable fields (blue cells) in the table below. The other items are pre-filled with values from the Grantee Information Worksheet.

Date Submitted 11-09-2012	Applicant Identifier 64-600432	**Type of Submission**	
Date Received by state	State Identifier	**Application**	**Pre-application**
Date Received by HUD	Federal Identifier	☐ Construction	☐ Construction
		☐ Non Construction	☐ Non Construction
Applicant Information			
Jurisdiction: City of Hattiesburg		UOG Code: 28035	
Street Address Line 1: P.O. Box 1898		Organizational DUNS: 07 944 8130	
Street Address Line 2		Organizational Unit	
City: Hattiesburg	State: Mississippi	Department: Federal & State Programs	
ZIP: 39403-1898	Country: U.S.A.	Division: Community Development	
Employer Identification Number (EIN):		County: Forrest	
64-600432		Program Year Start Date (MM/DD): 01/01	
Applicant Type:		**Specify Other Type if necessary:**	
Local Government: City		Specify Other Type	
Program Funding		**U.S. Department of Housing and Urban Development**	
Catalogue of Federal Domestic Assistance Numbers; Descriptive Title of Applicant Project(s); Areas Affected by Project(s) (cities, Counties, localities etc.); Estimated Funding			
Community Development Block Grant		14.218 Entitlement Grant	
CDBG Project Titles: Program Administration; Public Service Grants; Demolition; Housing Rehabilitation, Reconstruction, and Emergency Repair; Homeless & Special Needs Housing; Public Facilities; and Microenterprise Assistance.		Description of Areas Affected by CDBG Project(s): Citywide and low- and moderate-income areas	
$577,023.00	$Additional HUD Grant(s) Leveraged	Describe	
$Additional Federal Funds Leveraged		$Additional State Funds Leveraged	
$Locally Leveraged Funds		$Grantee Funds Leveraged	
$Anticipated Program Income		Other (Describe)	
Total Funds Leveraged for CDBG-based Project(s)			
Home Investment Partnerships Program		14.239 HOME	
HOME Project Titles: Program Administration; CHDO Affordable Housing; Housing Rehabilitation and Reconstruction; and Downpayment Assistance.		Description of Areas Affected by HOME Project(s): Citywide and low- and moderate-income areas.	
$275,957.00	$Additional HUD Grant(s) Leveraged	Describe	
$Additional Federal Funds Leveraged		$Additional State Funds Leveraged	
$Locally Leveraged Funds		$Grantee Funds Leveraged	
$Anticipated Program Income		Other (Describe)	
Total Funds Leveraged for HOME-based Project(s)			

Housing Opportunities for People with AIDS		14.241 HOPWA
HOPWA Project Titles		Description of Areas Affected by HOPWA Project(s)
$HOPWA Grant Amount	$Additional HUD Grant(s) Leveraged	Describe
$Additional Federal Funds Leveraged		$Additional State Funds Leveraged
$Locally Leveraged Funds		$Grantee Funds Leveraged
$Anticipated Program Income		Other (Describe)
Total Funds Leveraged for HOPWA-based Project(s)		

Emergency Shelter Grants Program		14.231 ESG
ESG Project Titles		Description of Areas Affected by ESG Project(s)
$ESG Grant Amount	$Additional HUD Grant(s) Leveraged	Describe
$Additional Federal Funds Leveraged		$Additional State Funds Leveraged
$Locally Leveraged Funds		$Grantee Funds Leveraged
$Anticipated Program Income		Other (Describe)
Total Funds Leveraged for ESG-based Project(s)		

Congressional Districts of:		Is application subject to review by state Executive Order 12372 Process?	
Applicant Districts: MS-004	Project Districts: MS-004		
Is the applicant delinquent on any federal debt? If "Yes" please include an additional document explaining the situation.		☐ Yes	This application was made available to the state EO 12372 process for review on DATE
		☒ No	Program is not covered by EO 12372
☐ Yes	☒ No	☐ N/A	Program has not been selected by the state for review

Person to be contacted regarding this application		
First Name: Johnny	Middle Initial: L.	Last Name: DuPree
Title: Mayor	Phone: (601) 545-4501	Fax: (601) 545-4592
eMail: JDUPREE@HattiesburgMS.com	Grantee Website: www.HattiesburgMS.com	Other Contact: Andrew Ellard, Dept of Federal & State Programs
Signature of Authorized Representative		Date Signed

City of Hattiesburg, MS

200 Forrest St.
P.O. Box 1898
Hattiesburg, MS 39401

Master

File Number: 2012-1276

File ID:	2012-1276	**Type:**	Regular Agenda Item	**Status:**	Agenda Ready
Version:	1	**Reference:**		**In Control:**	City Council
				File Created:	10/23/2012
Brief Title:	Acknowledge receipt of monthly budget for October 31, 2012			**Final Action:**	
				Minute Book Number:	MB2012-1/386

Title:

Acknowledge receipt of monthly budget report for the month ending October 31, 2012, on permanent file in the clerk's office.

Notes:

Sponsors:		**Enactment Date:**	
Attachments:	All Expenditures OCTOBER 2012, All Revenues OCTOBER 2012	**Enactment Number:**	
Contact:		**Meeting Date:**	
Drafter:	Marilyn Schwandt	**Effective Date:**	

History of Legislative File

Version:	Acting Body:	Date:	Action:	Sent To:	Due Date:	Return Date:	Result:
1	City Council	11/06/2012					

Text of Legislative File 2012-1276

Title

Acknowledge receipt of monthly budget report for the month ending October 31, 2012, on permanent file in the clerk's office.

Summary

Budget Information

Expenditure Type

Purchasing Item

Publication Information

CITY OF HATTIESBURG
001003 - GENERAL FUND-CITY COUNCIL
EXPENDITURE REPORT
1 Months Ending 10/31/12

THIS MONTH ACTUAL		OBJ/SUB	ANNUAL BUDGET	OPEN PO & CONTRACTS	YTD ACTUAL	REMAINING BALANCE	PERCENT PLAN	PERCENT ACTUAL	....PROJECTED.... OVER/UNDER	%
	SALARIES									
10,250	REGULAR WAGES	4000	141,040		10,250	130,790	8%	7%	(18,040)	-13%
	DISASTER RECOVERY WAGE	4010								
	OVERTIME	4300								
	DISASTER RECOVERY OVER	4310								
---			---	---	---	---	---	---	---	---
10,250	**SALARIES**		**141,040**		**10,250**	**130,790**	**8%**	**7%**	**(18,040)**	**-13%**
	EMPLOYEE BENEFITS									
1,437	STATE RETIREMENT	4600	18,835		1,437	17,398	8%	8%	(1,591)	-8%
721	F.I.C.A. TAXES	4700	10,110		721	9,389	8%	7%	(1,458)	-14%
2,328	HOSPITALIZATION INS.	4800	31,320		2,328	28,992	8%	7%	(3,384)	-11%
	UNEMPLOYMENT BENEFITS	4900								
	WORKMAN'S COMPENSATION	4910	545			545	8%	0%	(545)	-100%
---			---	---	---	---	---	---	---	---
4,487	**EMPLOYEE BENEFITS**		**60,810**		**4,487**	**56,323**	**8%**	**7%**	**(6,966)**	**-11%**
---			---	---	---	---	---	---	---	---
14,737	**PERSONAL SERVICES**		**201,850**		**14,737**	**187,113**	**8%**	**7%**	**(25,006)**	**-12%**
	OFFICE SUPPLIES									
	PAPER	5003	600			600	8%	0%	(600)	-100%
	PRINTED FORMS	5005								
	OTHER EXPENDABLE OFF.S	5010	1,500			1,500	8%	0%	(1,500)	-100%
	MINOR OFFICE EQUIP/FUR	5020								
	PHOTO SUPPLIES	5040								
	SUBSCRIPTIONS,MAGS,MAP	5050								
	BOOKS	5070								
	COMPUTER SUPPLIES	5080	800			800	8%	0%	(800)	-100%
---			---	---	---	---	---	---	---	---
	OFFICE SUPPLIES		**2,900**			**2,900**	**8%**	**0%**	**(2,900)**	**-100%**
	OPERATING SUPPLIES									
	CLEANING/JANITORIAL SP	5100								
	HOUSEHOLD SUPPLIES	5110	500			500	8%	0%	(500)	-100%
	FOOD	5115								
	MINOR EQUIPMENT	5460								
	OTHER OPERATING MATL/S	5590								

CITY OF HATTIESBURG
001003 - GENERAL FUND-CITY COUNCIL
EXPENDITURE REPORT
1 Months Ending 10/31/12

THIS MONTH ACTUAL		OBJ/SUB	ANNUAL BUDGET	OPEN PO & CONTRACTS	YTD ACTUAL	REMAINING BALANCE	PERCENT PLAN	PERCENT ACTUAL	....PROJECTED.... OVER/UNDER	%
	OPERATING SUPPLIES		**500**			**500**	**8%**	**0%**	**(500)**	**-100%**
	REPAIR & MAINTENANCE SP									
	BUILDING MATERIALS & S	5600								
	MTR VEHICLE REP. PTS/S	5700								
	OTHER REPAIR/MAINT. SP	5990								
	REPAIR & MAINTENANCE									
	SUPPLIES AND EXPENSES		**3,400**			**3,400**	**8%**	**0%**	**(3,400)**	**-100%**
	PROFESSIONAL SERVICES									
	AUDITING AND ACCOUNTIN	6010	99,750			99,750	8%	0%	(99,750)	-100%
	ARCHITECTURAL	6012								
	ENTERTAINMENT	6033								
	DATA PROCESSING	6035								
	OTHER PROFESSIONAL SER	6049								
	PROFESSIONAL SERVICE		**99,750**			**99,750**	**8%**	**0%**	**(99,750)**	**-100%**
	COMMUNICATIONS									
	TELEPHONE AND TELEGRAP	6060								
	POSTAGE	6070								
	COMMUNICATIONS									
	TRANSPORTATION									
	TRAVEL EXPENSE	6110								
	TRAVEL EXP-CLERK	6110 CLERK	2,400			2,400	8%	0%	(2,400)	-100%
	TRAVEL EXP-WARD 1	6110 WARD1	2,000			2,000	8%	0%	(2,000)	-100%
375	TRAVEL EXP-WARD 2	6110 WARD2	1,970		375	1,595	8%	19%	2,530	128%
	TRAVEL EXP-WARD 3	6110 WARD3	2,000			2,000	8%	0%	(2,000)	-100%
	TRAVEL EXP-WARD 4	6110 WARD4	2,000			2,000	8%	0%	(2,000)	-100%
	TRAVEL EXP-WARD 5	6110 WARD5	2,000			2,000	8%	0%	(2,000)	-100%
375	**TRAVEL EXPENSE**		**12,370**		**375**	**11,995**	**8%**	**3%**	**(7,870)**	**-64%**
	FREIGHT	6120								
24	MESSENGER/EXPRESS SERV	6130	100		24	76	8%	24%	188	188%

CITY OF HATTIESBURG
001003 - GENERAL FUND-CITY COUNCIL
EXPENDITURE REPORT
1 Months Ending 10/31/12

THIS MONTH ACTUAL		OBJ/SUB	ANNUAL BUDGET	OPEN PO & CONTRACTS	YTD ACTUAL	REMAINING BALANCE	PERCENT PLAN	PERCENT ACTUAL	....PROJECTED.... OVER/UNDER	%
399	**TRANSPORTATION**		**12,470**		**399**	**12,071**	**8%**	**3%**	**(7,682)**	**-62%**
	ADVERTISING									
	ADVERTISING	6150	100			100	8%	0%	(100)	-100%
	ORDINANCE EXPENSE	6160								
---			---	---	---	---	---	---	---	---
	ADVERTISING		**100**			**100**	**8%**	**0%**	**(100)**	**-100%**
	PRINTING AND BINDING									
	PRINTING	6200								
	BINDING	6205								
	FILM PROCESSING	6240								
---			---	---	---	---	---	---	---	---
	PRINTING AND BINDING									
	INSURANCE									
	PUBLIC LIAB/PROPERTY D	6255								
	SURETY AND FORGERY BON	6270	2,015			2,015	8%	0%	(2,015)	-100%
	OTHER INSURANCE	6299								
---			---	---	---	---	---	---	---	---
	INSURANCE		**2,015**			**2,015**	**8%**	**0%**	**(2,015)**	**-100%**
	REPR/MAINT-OUTSIDE LABO									
	OFFICE EQUIPMENT R&M	6365								
	HOUSEHOLD EQUIPMENT R&	6370								
	MINOR EQUIPMENT R&M	6382								
	MOTOR VEHICLE EQ. R&M	6384								
	OTHER REPAIRS AND MAIN	6399	1,000			1,000	8%	0%	(1,000)	-100%
---			---	---	---	---	---	---	---	---
	REPR/MAINT-OUTSIDE L		**1,000**			**1,000**	**8%**	**0%**	**(1,000)**	**-100%**
	RENTALS									
	OFFICE EQUIPMENT RENT	6410								
	OTHER RENT	6449								
---			---	---	---	---	---	---	---	---
	RENTALS									
	OTHER SERVICES & CHARGE									
	EXHIBITIONS & PROMOTIO	6500	975			975	8%	0%	(975)	-100%
	DUES AND MEMBERSHIPS	6840	125			125	8%	0%	(125)	-100%
	REGISTRATION FEE/TUITI	6845								
	REG FEE/TUITION-CLERK	6845 CLERK	1,000			1,000	8%	0%	(1,000)	-100%
	REG FEE/TUITION-WARD	6845 WARD1	1,000			1,000	8%	0%	(1,000)	-100%

CITY OF HATTIESBURG
001003 - GENERAL FUND-CITY COUNCIL
EXPENDITURE REPORT
1 Months Ending 10/31/12

THIS MONTH ACTUAL		OBJ/SUB	ANNUAL BUDGET	OPEN PO & CONTRACTS	YTD ACTUAL	REMAINING BALANCE	PERCENT PLAN	PERCENT ACTUAL	....PROJECTED.... OVER/UNDER	%
1,030	REG FEE/TUITION-WARD	6845 WARD2	1,030		1,030		8%	100%	11,330	100%
	REG FEE/TUITION-WARD	6845 WARD3	1,000			1,000	8%	0%	(1,000)	-100%
	REG FEE/TUITION-WARD	6845 WARD4	1,000			1,000	8%	0%	(1,000)	-100%
	REG FEE/TUITION-WARD	6845 WARD5	1,000			1,000	8%	0%	(1,000)	-100%
---			---	---	---	---	---	---	---	---
1,030	**REGISTRATION FEE/TU**		**6,030**		**1,030**	**5,000**	**8%**	**17%**	**6,330**	**105%**
	SERVICES NOT SPECIFIED	6999								
---			---	---	---	---	---	---	---	---
1,030	**OTHER SERVICES & CHA**		**7,130**		**1,030**	**6,100**	**8%**	**14%**	**5,230**	**73%**
---			---	---	---	---	---	---	---	---
1,429	**OTHER SERVICES & CHAR**		**122,465**		**1,429**	**121,036**	**8%**	**1%**	**(105,317)**	**-86%**
	IMPROVEMENT OTHER THAN									
	OTHER IMPROVEMENTS	7295								
---			---	---	---	---	---	---	---	---
	IMPROVEMENT OTHER TH									
	MACHINERY AND EQUIPMENT									
	HOUSEHOLD FURN/EQUIP.	7320								
	OFFICE FURN/EQUIP.	7325								
	DATA PROCESSING EQUIP.	7327	74,000	8,957		65,043	8%	0%	(74,000)	-100%
	COMMUNICATION EQUIPMEN	7355								
	OTHER EQUIPMENT	7399								
---			---	---	---	---	---	---	---	---
	MACHINERY AND EQUIPM		**74,000**	**8,957**		**65,043**	**8%**	**0%**	**(74,000)**	**-100%**
---			---	---	---	---	---	---	---	---
	CAPITAL OUTLAY		**74,000**	**8,957**		**65,043**	**8%**	**0%**	**(74,000)**	**-100%**
---			---	---	---	---	---	---	---	---
16,166	**EXPENDITURES**		**401,715**	**8,957**	**16,166**	**376,593**	**8%**	**4%**	**(207,723)**	**-52%**

CITY OF HATTIESBURG
001015 - GENERAL FUND-CITY COURT
EXPENDITURE REPORT
1 Months Ending 10/31/12

THIS MONTH ACTUAL		OBJ/SUB	ANNUAL BUDGET	OPEN PO & CONTRACTS	YTD ACTUAL	REMAINING BALANCE	PERCENT PLAN	PERCENT ACTUAL	....PROJECTED.... OVER/UNDER	%
	SALARIES									
42,619	REGULAR WAGES	4000	658,647		42,619	616,028	8%	6%	(147,219)	-22%
	DISASTER RECOVERY WAGE	4010								
2,836	OVERTIME	4300	20,000		2,836	17,164	8%	14%	14,032	70%
	DISASTER RECOVERY OVER	4310								
---			---	---	---	---	---	---	---	---
45,455	**SALARIES**		**678,647**		**45,455**	**633,192**	**8%**	**7%**	**(133,187)**	**-20%**
	EMPLOYEE BENEFITS									
6,013	STATE RETIREMENT	4600	96,800		6,013	90,787	8%	6%	(24,644)	-25%
3,415	F.I.C.A. TAXES	4700	51,925		3,415	48,510	8%	7%	(10,945)	-21%
5,427	HOSPITALIZATION INS.	4800	125,280		5,427	119,853	8%	4%	(60,156)	-48%
	UNEMPLOYMENT BENEFITS	4900	3,000			3,000	8%	0%	(3,000)	-100%
	WORKMAN'S COMPENSATION	4910	1,900			1,900	8%	0%	(1,900)	-100%
---			---	---	---	---	---	---	---	---
14,855	**EMPLOYEE BENEFITS**		**278,905**		**14,855**	**264,050**	**8%**	**5%**	**(100,645)**	**-36%**
---			---	---	---	---	---	---	---	---
60,310	**PERSONAL SERVICES**		**957,552**		**60,310**	**897,242**	**8%**	**6%**	**(233,832)**	**-24%**
	OFFICE SUPPLIES									
600	PAPER	5003	3,000		600	2,400	8%	20%	4,200	140%
	PRINTED FORMS	5005								
	OTHER EXPENDABLE OFF.S	5010	3,000			3,000	8%	0%	(3,000)	-100%
	MINOR OFFICE EQUIP/FUR	5020	100			100	8%	0%	(100)	-100%
	MICROFILM SUPPLIES	5030								
	SUBSCRIPTIONS,MAGS,MAP	5050								
	BOOKS	5070								
	COMPUTER SUPPLIES	5080	5,500			5,500	8%	0%	(5,500)	-100%
---			---	---	---	---	---	---	---	---
600	**OFFICE SUPPLIES**		**11,600**		**600**	**11,000**	**8%**	**5%**	**(4,400)**	**-38%**
	OPERATING SUPPLIES									
	FOOD	5115								
	WEARING APPAREL	5355								
	MINOR EQUIPMENT	5460								
	OTHER OPERATING MATL/S	5590	1,500			1,500	8%	0%	(1,500)	-100%
	OTHER OPER.MATL-JAIL G	5591	415			415	8%	0%	(415)	-100%

			CITY OF HATTIESBURG							
	001015 - GENERAL FUND-CITY COURT		EXPENDITURE REPORT							
			1 Months Ending 10/31/12							
THIS MONTH			ANNUAL	OPEN PO	YTD	REMAINING	PERCENT		....PROJECTED....	
ACTUAL		OBJ/SUB	BUDGET	& CONTRACTS	ACTUAL	BALANCE	PLAN	ACTUAL	OVER/UNDER	%
---			---	---	---	---	---	---	---	---
	OPERATING SUPPLIES		**1,915**			**1,915**	**8%**	**0%**	**(1,915)**	**-100%**
	REPAIR & MAINTENANCE SP									
	BUILDING MATERIALS & S	5600								
---			---	---	---	---	---	---	---	---
	REPAIR & MAINTENANCE									
---			---	---	---	---	---	---	---	---
600	**SUPPLIES AND EXPENSES**		**13,515**		**600**	**12,915**	**8%**	**4%**	**(6,315)**	**-47%**
	_____									
	PROFESSIONAL SERVICES									
	CONSULTANT SERV/SURVEY	6020								
	DATA PROCESSING	6035								
	MICROFILM PROCESSING	6037								
	OTHER PROF-JAIL DIV GR	6048	55,195			55,195	8%	0%	(55,195)	-100%
	OTHER PROFESSIONAL SER	6049	55,000			55,000	8%	0%	(55,000)	-100%
---			---	---	---	---	---	---	---	---
	PROFESSIONAL SERVICE		**110,195**			**110,195**	**8%**	**0%**	**(110,195)**	**-100%**
	COMMUNICATIONS									
	TELEPHONE AND TELEGRAP	6060								
	POSTAGE	6070								
---			---	---	---	---	---	---	---	---
	COMMUNICATIONS									
	TRANSPORTATION									
	TRAVEL EXPENSE	6110	3,100			3,100	8%	0%	(3,100)	-100%
	TRVL-JAIL DIVERSN GRAN	6118	7,173			7,173	8%	0%	(7,173)	-100%
	FREIGHT	6120								
	MESSENGER/EXPRESS SERV	6130								
---			---	---	---	---	---	---	---	---
	TRANSPORTATION		**10,273**			**10,273**	**8%**	**0%**	**(10,273)**	**-100%**
	ADVERTISING									
	ADVERTISING	6150								
---			---	---	---	---	---	---	---	---
	ADVERTISING									
	PRINTING AND BINDING									
2,801	PRINTING	6200	5,500		2,801	2,699	8%	51%	28,112	511%
	BINDING	6205								
---			---	---	---	---	---	---	---	---

			CITY OF HATTIESBURG							
	001015 - GENERAL FUND-CITY COURT		EXPENDITURE REPORT							
			1 Months Ending 10/31/12							
THIS MONTH			ANNUAL	OPEN PO	YTD	REMAINING	PERCENT		....PROJECTED....	
ACTUAL		OBJ/SUB	BUDGET	& CONTRACTS	ACTUAL	BALANCE	PLAN	ACTUAL	OVER/UNDER	%
2,801	**PRINTING AND BINDING**		**5,500**		**2,801**	**2,699**	**8%**	**51%**	**28,112**	**511%**
	INSURANCE									
	SURETY AND FORGERY BON	6270								
---			---	---	---	---	---	---	---	---
	INSURANCE									
	REPR/MAINT-OUTSIDE LABO									
	BUILDING R&M	6350								
398	OFFICE EQUIPMENT R&M	6365	14,700		398	14,302	8%	3%	(9,924)	-68%
---			---	---	---	---	---	---	---	---
398	**REPR/MAINT-OUTSIDE L**		**14,700**		**398**	**14,302**	**8%**	**3%**	**(9,924)**	**-68%**
	RENTALS									
	OFFICE EQUIPMENT RENT	6410								
	OTHER RENT	6449								
---			---	---	---	---	---	---	---	---
	RENTALS									
	OTHER SERVICES & CHARGE									
	COURT COSTS	6710								
	REFUNDS	6835								
	POLICE FINE REFUNDS	6835 PF								
---			---	---	---	---	---	---	---	---
	REFUNDS									
	DUES AND MEMBERSHIPS	6840	150			150	8%	0%	(150)	-100%
	REGISTRATION FEE/TUITI	6845	600			600	8%	0%	(600)	-100%
	SERVICES NOT SPECIFIED	6999								
---			---	---	---	---	---	---	---	---
	OTHER SERVICES & CHA		**750**			**750**	**8%**	**0%**	**(750)**	**-100%**
---			---	---	---	---	---	---	---	---
3,199	**OTHER SERVICES & CHAR**		**141,418**		**3,199**	**138,219**	**8%**	**2%**	**(103,030)**	**-73%**
	MACHINERY AND EQUIPMENT									
	OFFICE FURN/EQUIP.	7325								
	DATA PROCESSING EQUIP.	7327								
	OTHER EQUIPMENT	7399								
---			---	---	---	---	---	---	---	---
	MACHINERY AND EQUIPM									
---			---	---	---	---	---	---	---	---
	CAPITAL OUTLAY									

			CITY OF HATTIESBURG							
	001015 - GENERAL FUND-CITY COURT		EXPENDITURE REPORT							
			1 Months Ending 10/31/12							
THIS MONTH			ANNUAL	OPEN PO	YTD	REMAINING	PERCENT		....PROJECTED....	
ACTUAL		OBJ/SUB	BUDGET	& CONTRACTS	ACTUAL	BALANCE	PLAN	ACTUAL	OVER/UNDER	%
---			---	---	---	---	---	---	---	---
64,109	**EXPENDITURES**		**1,112,485**		**64,109**	**1,048,376**	**8%**	**6%**	**(343,177)**	**-31%**

CITY OF HATTIESBURG
001020 - GENERAL FUND-MAYOR/ADMIN.
EXPENDITURE REPORT
1 Months Ending 10/31/12

THIS MONTH ACTUAL		OBJ/SUB	ANNUAL BUDGET	OPEN PO & CONTRACTS	YTD ACTUAL	REMAINING BALANCE	PERCENT PLAN	PERCENT ACTUAL	....PROJECTED.... OVER/UNDER	%
	SALARIES									
30,094	REGULAR WAGES	4000	399,546		30,094	369,452	8%	8%	(38,418)	-10%
	DISASTER RECOVERY WAGE	4010								
	OVERTIME	4300								
	DISASTER RECOVERY OVER	4310								
---			---	---	---	---	---	---	---	---
30,094	**SALARIES**		**399,546**		**30,094**	**369,452**	**8%**	**8%**	**(38,418)**	**-10%**
	EMPLOYEE BENEFITS									
4,291	STATE RETIREMENT	4600	56,990		4,291	52,699	8%	8%	(5,498)	-10%
2,214	F.I.C.A. TAXES	4700	30,570		2,214	28,356	8%	7%	(4,002)	-13%
3,104	HOSPITALIZATION INS.	4800	41,760		3,104	38,656	8%	7%	(4,512)	-11%
	UNEMPLOYMENT BENEFITS	4900	1,000			1,000	8%	0%	(1,000)	-100%
	WORKMAN'S COMPENSATION	4910	3,700			3,700	8%	0%	(3,700)	-100%
---			---	---	---	---	---	---	---	---
9,610	**EMPLOYEE BENEFITS**		**134,020**		**9,610**	**124,410**	**8%**	**7%**	**(18,700)**	**-14%**
---			---	---	---	---	---	---	---	---
39,704	**PERSONAL SERVICES**		**533,566**		**39,704**	**493,862**	**8%**	**7%**	**(57,118)**	**-11%**
	OFFICE SUPPLIES									
	PAPER	5003	250			250	8%	0%	(250)	-100%
	PRINTED FORMS	5005								
	OTHER EXPENDABLE OFF.S	5010	1,800			1,800	8%	0%	(1,800)	-100%
16	MINOR OFFICE EQUIP/FUR	5020	500		16	484	8%	3%	(308)	-62%
	PHOTO SUPPLIES	5040								
	SUBSCRIPTIONS,MAGS,MAP	5050	650			650	8%	0%	(650)	-100%
285	BOOKS	5070	800		285	515	8%	36%	2,620	328%
	COMPUTER SUPPLIES	5080	500			500	8%	0%	(500)	-100%
---			---	---	---	---	---	---	---	---
301	**OFFICE SUPPLIES**		**4,500**		**301**	**4,199**	**8%**	**7%**	**(888)**	**-20%**
	OPERATING SUPPLIES									
	CLEANING/JANITORIAL SP	5100								
	HOUSEHOLD SUPPLIES	5110								
138	FOOD	5115	2,250		138	2,112	8%	6%	(594)	-26%
	GAS AND OIL	5250	4,400			4,400	8%	0%	(4,400)	-100%
	LUBRICANTS	5255								

CITY OF HATTIESBURG
001020 - GENERAL FUND-MAYOR/ADMIN.
EXPENDITURE REPORT
1 Months Ending 10/31/12

THIS MONTH ACTUAL		OBJ/SUB	ANNUAL BUDGET	OPEN PO & CONTRACTS	YTD ACTUAL	REMAINING BALANCE	PERCENT PLAN	PERCENT ACTUAL	....PROJECTED.... OVER/UNDER	%
	MINOR EQUIPMENT	5460								
	OTHER OPERATING MATL/S	5590	750			750	8%	0%	(750)	-100%
---			---	---	---	---	---	---	---	---
138	**OPERATING SUPPLIES**		**7,400**		**138**	**7,262**	**8%**	**2%**	**(5,744)**	**-78%**
	REPAIR & MAINTENANCE SP									
	MTR VEHICLE REP. PTS/S	5700	750			750	8%	0%	(750)	-100%
	COMMUNICATION REPAIR P	5750								
	OTHER REPAIR/MAINT. SP	5990	250			250	8%	0%	(250)	-100%
---			---	---	---	---	---	---	---	---
	REPAIR & MAINTENANCE		**1,000**			**1,000**	**8%**	**0%**	**(1,000)**	**-100%**
---			---	---	---	---	---	---	---	---
439	**SUPPLIES AND EXPENSES**		**12,900**		**439**	**12,461**	**8%**	**3%**	**(7,632)**	**-59%**
	_____									
	PROFESSIONAL SERVICES									
	APPRAISAL	6017								
	CONSULTANT SERV/SURVEY	6020								
	ENTERTAINMENT	6033								
	OTHER PROFESSIONAL SER	6049	750			750	8%	0%	(750)	-100%
---			---	---	---	---	---	---	---	---
	PROFESSIONAL SERVICE		**750**			**750**	**8%**	**0%**	**(750)**	**-100%**
	COMMUNICATIONS									
269	TELEPHONE AND TELEGRAP	6060	3,500		269	3,231	8%	8%	(272)	-8%
	POSTAGE	6070								
---			---	---	---	---	---	---	---	---
269	**COMMUNICATIONS**		**3,500**		**269**	**3,231**	**8%**	**8%**	**(272)**	**-8%**
	TRANSPORTATION									
	TRAVEL EXPENSE	6110	16,000			16,000	8%	0%	(16,000)	-100%
	FREIGHT	6120								
	MESSENGER/EXPRESS SERV	6130	400			400	8%	0%	(400)	-100%
---			---	---	---	---	---	---	---	---
	TRANSPORTATION		**16,400**			**16,400**	**8%**	**0%**	**(16,400)**	**-100%**
	ADVERTISING									
2,095	ADVERTISING	6150	19,400	1,145	2,095	16,160	8%	11%	5,740	30%
3,067	ADVERTISING-BC HEALTHY	6151	22,002		3,067	18,935	8%	14%	14,802	67%
	ADVERTISING-SPEC. EVEN	6152								
150	ADVERTISING-MAYOR'S YO	6153	7,500		150	7,350	8%	2%	(5,700)	-76%
21,553	ADVERTISING-USM-ISP	6156	21,650		21,553	97	8%	100%	236,986	95%

CITY OF HATTIESBURG
001020 - GENERAL FUND-MAYOR/ADMIN.
EXPENDITURE REPORT
1 Months Ending 10/31/12

THIS MONTH ACTUAL		OBJ/SUB	ANNUAL BUDGET	OPEN PO & CONTRACTS	YTD ACTUAL	REMAINING BALANCE	PERCENT PLAN	PERCENT ACTUAL	....PROJECTED.... OVER/UNDER	%
26,865	**ADVERTISING**		**70,552**	**1,145**	**26,865**	**42,542**	**8%**	**38%**	**251,828**	**357%**
	PRINTING AND BINDING									
	PRINTING	6200	1,500			1,500	8%	0%	(1,500)	-100%
	BINDING	6205								
	BLUELINES	6210								
	FILM PROCESSING	6240								
	PRINTING AND BINDING		**1,500**			**1,500**	**8%**	**0%**	**(1,500)**	**-100%**
	INSURANCE									
	PUBLIC LIAB/PROPERTY D	6255								
	AUTOMOBILE INSURANCE	6265								
	SURETY AND FORGERY BON	6270								
	OTHER INSURANCE	6299								
	INSURANCE									
	REPR/MAINT-OUTSIDE LABO									
	OFFICE EQUIPMENT R&M	6365	1,000			1,000	8%	0%	(1,000)	-100%
	HOUSEHOLD EQUIPMENT R&	6370								
	MINOR EQUIPMENT R&M	6382								
	MOTOR VEHICLE EQ. R&M	6384	1,000			1,000	8%	0%	(1,000)	-100%
	COMMUNICATION EQ. R&M	6390								
	OTHER REPAIRS AND MAIN	6399								
	REPR/MAINT-OUTSIDE L		**2,000**			**2,000**	**8%**	**0%**	**(2,000)**	**-100%**
	RENTALS									
	OFFICE EQUIPMENT RENT	6410								
	OTHER RENT	6449								
	RENTALS									
	OTHER SERVICES & CHARGE									
	LATE PAYMENT CHARGE	6705								
	DUES AND MEMBERSHIPS	6840	6,000			6,000	8%	0%	(6,000)	-100%
85	REGISTRATION FEE/TUITI	6845	3,000		85	2,915	8%	3%	(1,980)	-66%
	SERVICES NOT SPECIFIED	6999								
85	**OTHER SERVICES & CHA**		**9,000**		**85**	**8,915**	**8%**	**1%**	**(7,980)**	**-89%**

			CITY OF HATTIESBURG							
	001020 - GENERAL FUND-MAYOR/ADMIN.		EXPENDITURE REPORT							
			1 Months Ending 10/31/12							
THIS MONTH			ANNUAL	OPEN PO	YTD	REMAINING	PERCENT		....PROJECTED....	
ACTUAL		OBJ/SUB	BUDGET	& CONTRACTS	ACTUAL	BALANCE	PLAN	ACTUAL	OVER/UNDER	%
---			---	---	---	---	---	---	---	---
27,218	**OTHER SERVICES & CHAR**		**103,702**	**1,145**	**27,218**	**75,339**	**8%**	**26%**	**222,914**	**215%**
	IMPROVEMENT OTHER THAN									
	OTHER IMPROVEMENTS	7295								
---			---	---	---	---	---	---	---	---
	IMPROVEMENT OTHER TH									
	MACHINERY AND EQUIPMENT									
	HOUSEHOLD FURN/EQUIP.	7320								
	OFFICE FURN/EQUIP.	7325								
	DATA PROCESSING EQUIP.	7327								
	COMMUNICATION EQUIPMEN	7355								
	OTHER EQUIPMENT	7399								
---			---	---	---	---	---	---	---	---
	MACHINERY AND EQUIPM									
	VEHICLES									
	AUTOMOBILES	7400								
---			---	---	---	---	---	---	---	---
	VEHICLES									
---			---	---	---	---	---	---	---	---
	CAPITAL OUTLAY									
---			---	---	---	---	---	---	---	---
67,361	**EXPENDITURES**		**650,168**	**1,145**	**67,361**	**581,662**	**8%**	**10%**	**158,164**	**24%**

			CITY OF HATTIESBURG							
	001030 - GENERAL FUND-ELECTIONS		EXPENDITURE REPORT							
			1 Months Ending 10/31/12							
THIS MONTH			ANNUAL	OPEN PO	YTD	REMAINING	PERCENT		....PROJECTED....	
ACTUAL		OBJ/SUB	BUDGET	& CONTRACTS	ACTUAL	BALANCE	PLAN	ACTUAL	OVER/UNDER	%
	SALARIES									
	REGULAR WAGES	4000								
	OVERTIME	4300								
---			---	---	---	---	---	---	---	---
	SALARIES									
	EMPLOYEE BENEFITS									
	STATE RETIREMENT	4600								
	F.I.C.A. TAXES	4700								
	HOSPITALIZATION INS.	4800								
	UNEMPLOYMENT BENEFITS	4900								
	WORKMAN'S COMPENSATION	4910								
---			---	---	---	---	---	---	---	---
	EMPLOYEE BENEFITS									
---			---	---	---	---	---	---	---	---
	PERSONAL SERVICES									
	OFFICE SUPPLIES									
	PAPER	5003								
	PRINTED FORMS	5005								
	OTHER EXPENDABLE OFF.S	5010	2,000			2,000	8%	0%	(2,000)	-100%
---			---	---	---	---	---	---	---	---
	OFFICE SUPPLIES		**2,000**			**2,000**	**8%**	**0%**	**(2,000)**	**-100%**
	OPERATING SUPPLIES									
	MINOR EQUIPMENT	5460								
	OTHER OPERATING MATL/S	5590								
---			---	---	---	---	---	---	---	---
	OPERATING SUPPLIES									
	REPAIR & MAINTENANCE SP									
	OTHER REPAIR/MAINT. SP	5990								
---			---	---	---	---	---	---	---	---
	REPAIR & MAINTENANCE									
---			---	---	---	---	---	---	---	---
	SUPPLIES AND EXPENSES		**2,000**			**2,000**	**8%**	**0%**	**(2,000)**	**-100%**
	PROFESSIONAL SERVICES									

CITY OF HATTIESBURG
001030 - GENERAL FUND-ELECTIONS
EXPENDITURE REPORT
1 Months Ending 10/31/12

THIS MONTH ACTUAL		OBJ/SUB	ANNUAL BUDGET	OPEN PO & CONTRACTS	YTD ACTUAL	REMAINING BALANCE	PERCENT PLAN	PERCENT ACTUAL	....PROJECTED.... OVER/UNDER	%
	LEGAL	6025								
	DATA PROCESSING	6035								
	OTHER PROFESSIONAL SER	6049								
---			---	---	---	---	---	---	---	---
	PROFESSIONAL SERVICE									
	COMMUNICATIONS									
	POSTAGE	6070								
---			---	---	---	---	---	---	---	---
	COMMUNICATIONS									
	TRANSPORTATION									
	FREIGHT	6120								
---			---	---	---	---	---	---	---	---
	TRANSPORTATION									
	ADVERTISING									
	ADVERTISING	6150								
---			---	---	---	---	---	---	---	---
	ADVERTISING									
	PRINTING AND BINDING									
	PRINTING	6200								
	BINDING	6205								
---			---	---	---	---	---	---	---	---
	PRINTING AND BINDING									
	REPR/MAINT-OUTSIDE LABO									
	OFFICE EQUIPMENT R&M	6365								
	OTHER REPAIRS AND MAIN	6399								
---			---	---	---	---	---	---	---	---
	REPR/MAINT-OUTSIDE L									
	RENTALS									
	BUILDING RENT	6405								
	OFFICE EQUIPMENT RENT	6410								
---			---	---	---	---	---	---	---	---
	RENTALS									
	OTHER SERVICES & CHARGE									
	SERVICES NOT SPECIFIED	6999	56,000			56,000	8%	0%	(56,000)	-100%
---			---	---	---	---	---	---	---	---
	OTHER SERVICES & CHA		**56,000**			**56,000**	**8%**	**0%**	**(56,000)**	**-100%**
---			---	---	---	---	---	---	---	---

			CITY OF HATTIESBURG							
	001030 - GENERAL FUND-ELECTIONS		EXPENDITURE REPORT							
			1 Months Ending 10/31/12							
THIS MONTH			ANNUAL	OPEN PO	YTD	REMAINING	PERCENT		....PROJECTED....	
ACTUAL		OBJ/SUB	BUDGET	& CONTRACTS	ACTUAL	BALANCE	PLAN	ACTUAL	OVER/UNDER	%
	OTHER SERVICES & CHAR		**56,000**			**56,000**	**8%**	**0%**	**(56,000)**	**-100%**
	_____									
	MACHINERY AND EQUIPMENT									
	OFFICE FURN/EQUIP.	7325								
	OTHER EQUIPMENT	7399								
---			---	---	---	---	---	---	---	---
	MACHINERY AND EQUIPM									
---			---	---	---	---	---	---	---	---
	CAPITAL OUTLAY									
---			---	---	---	---	---	---	---	---
	EXPENDITURES		**58,000**			**58,000**	**8%**	**0%**	**(58,000)**	**-100%**

CITY OF HATTIESBURG
001040 - GENERAL FUND-MUNICIPALCLERK
EXPENDITURE REPORT
1 Months Ending 10/31/12

THIS MONTH ACTUAL		OBJ/SUB	ANNUAL BUDGET	OPEN PO & CONTRACTS	YTD ACTUAL	REMAINING BALANCE	PERCENT PLAN	PERCENT ACTUAL	....PROJECTED.... OVER/UNDER	%
	SALARIES									
8,458	REGULAR WAGES	4000	109,959		8,458	101,501	8%	8%	(8,463)	-8%
	DISASTER RECOVERY WAGE	4010								
	OVERTIME	4300								
	DISASTER RECOVERY OVER	4310								
---			---	---	---	---	---	---	---	---
8,458	**SALARIES**		**109,959**		**8,458**	**101,501**	**8%**	**8%**	**(8,463)**	**-8%**
	EMPLOYEE BENEFITS									
1,206	STATE RETIREMENT	4600	15,685		1,206	14,479	8%	8%	(1,213)	-8%
639	F.I.C.A. TAXES	4700	8,415		639	7,776	8%	8%	(747)	-9%
1,552	HOSPITALIZATION INS.	4800	20,880		1,552	19,328	8%	7%	(2,256)	-11%
	UNEMPLOYMENT BENEFITS	4900								
	WORKMAN'S COMPENSATION	4910	412			412	8%	0%	(412)	-100%
---			---	---	---	---	---	---	---	---
3,397	**EMPLOYEE BENEFITS**		**45,392**		**3,397**	**41,995**	**8%**	**7%**	**(4,628)**	**-10%**
---			---	---	---	---	---	---	---	---
11,856	**PERSONAL SERVICES**		**155,351**		**11,856**	**143,495**	**8%**	**8%**	**(13,079)**	**-8%**
	OFFICE SUPPLIES									
	PAPER	5003								
	PRINTED FORMS	5005								
306	OTHER EXPENDABLE OFF.S	5010	2,200		306	1,894	8%	14%	1,472	67%
	MINOR OFFICE EQUIP/FUR	5020	1,000			1,000	8%	0%	(1,000)	-100%
	MICROFILM SUPPLIES	5030								
	SUBSCRIPTIONS,MAGS,MAP	5050	235			235	8%	0%	(235)	-100%
	BOOKS	5070	365			365	8%	0%	(365)	-100%
	COMPUTER SUPPLIES	5080								
---			---	---	---	---	---	---	---	---
306	**OFFICE SUPPLIES**		**3,800**		**306**	**3,494**	**8%**	**8%**	**(128)**	**-3%**
	OPERATING SUPPLIES									
	FOOD	5115								
	GAS AND OIL	5250								
	MINOR EQUIPMENT	5460								
	OTHER OPERATING MATL/S	5590								
---			---	---	---	---	---	---	---	---

CITY OF HATTIESBURG
001040 - GENERAL FUND-MUNICIPALCLERK
EXPENDITURE REPORT
1 Months Ending 10/31/12

THIS MONTH ACTUAL		OBJ/SUB	ANNUAL BUDGET	OPEN PO & CONTRACTS	YTD ACTUAL	REMAINING BALANCE	PERCENT PLAN	PERCENT ACTUAL	....PROJECTED.... OVER/UNDER	%
	OPERATING SUPPLIES									
---			---	---	---	---	---	---	---	---
306	**SUPPLIES AND EXPENSES**		**3,800**		**306**	**3,494**	**8%**	**8%**	**(128)**	**-3%**
	PROFESSIONAL SERVICES									
	CONSULTANT SERV/SURVEY	6020								
143	ABSTRACTING & RECORDIN	6023	1,800		143	1,657	8%	8%	(84)	-5%
	LEGAL	6025								
	DATA PROCESSING	6035								
	MICROFILM PROCESSING	6037								
	OTHER PROFESSIONAL SER	6049	350			350	8%	0%	(350)	-100%
---			---	---	---	---	---	---	---	---
143	**PROFESSIONAL SERVICE**		**2,150**		**143**	**2,007**	**8%**	**7%**	**(434)**	**-20%**
	COMMUNICATIONS									
	TELEPHONE AND TELEGRAP	6060								
	POSTAGE	6070	80			80	8%	0%	(80)	-100%
---			---	---	---	---	---	---	---	---
	COMMUNICATIONS		**80**			**80**	**8%**	**0%**	**(80)**	**-100%**
	TRANSPORTATION									
	TRAVEL EXPENSE	6110								
	FREIGHT	6120								
	MESSENGER/EXPRESS SERV	6130	35			35	8%	0%	(35)	-100%
---			---	---	---	---	---	---	---	---
	TRANSPORTATION		**35**			**35**	**8%**	**0%**	**(35)**	**-100%**
	ADVERTISING									
1,412	ADVERTISING	6150	20,500		1,412	19,088	8%	7%	(3,556)	-17%
357	ORDINANCE EXPENSE	6160	5,350		357	4,993	8%	7%	(1,066)	-20%
---			---	---	---	---	---	---	---	---
1,769	**ADVERTISING**		**25,850**		**1,769**	**24,081**	**8%**	**7%**	**(4,622)**	**-18%**
	PRINTING AND BINDING									
993	PRINTING	6200	1,500		993	507	8%	66%	10,416	694%
	BINDING	6205								
---			---	---	---	---	---	---	---	---
993	**PRINTING AND BINDING**		**1,500**		**993**	**507**	**8%**	**66%**	**10,416**	**694%**
	INSURANCE									
	SURETY AND FORGERY BON	6270								
---			---	---	---	---	---	---	---	---

			CITY OF HATTIESBURG							
	001040 - GENERAL FUND-MUNICIPALCLERK		EXPENDITURE REPORT							
			1 Months Ending 10/31/12							
THIS MONTH			ANNUAL	OPEN PO	YTD	REMAINING	PERCENT		....PROJECTED....	
ACTUAL		OBJ/SUB	BUDGET	& CONTRACTS	ACTUAL	BALANCE	PLAN	ACTUAL	OVER/UNDER	%
	INSURANCE									
	REPR/MAINT-OUTSIDE LABO									
2,988	OFFICE EQUIPMENT R&M	6365	3,300		2,988	312	8%	91%	32,556	987%
390	DISINFECT./EXTERMINATI	6394	780		390	390	8%	50%	3,900	500%
	OTHER REPAIRS AND MAIN	6399								
3,378	**REPR/MAINT-OUTSIDE L**		**4,080**		**3,378**	**702**	**8%**	**83%**	**36,456**	**894%**
	RENTALS									
	OFFICE EQUIPMENT RENT	6410								
	RENTALS									
	OTHER SERVICES & CHARGE									
	DUES AND MEMBERSHIPS	6840								
	REGISTRATION FEE/TUITI	6845								
	SERVICES NOT SPECIFIED	6999	1,000			1,000	8%	0%	(1,000)	-100%
	OTHER SERVICES & CHA		**1,000**			**1,000**	**8%**	**0%**	**(1,000)**	**-100%**
6,283	**OTHER SERVICES & CHAR**		**34,695**		**6,283**	**28,412**	**8%**	**18%**	**40,701**	**117%**
	MACHINERY AND EQUIPMENT									
	OFFICE FURN/EQUIP.	7325								
	DATA PROCESSING EQUIP.	7327								
	OTHER EQUIPMENT	7399								
	MACHINERY AND EQUIPM									
	CAPITAL OUTLAY									
18,444	**EXPENDITURES**		**193,846**		**18,444**	**175,402**	**8%**	**10%**	**27,482**	**14%**

CITY OF HATTIESBURG
001041 - GENERAL FUND-TAX DIVISION
EXPENDITURE REPORT
1 Months Ending 10/31/12

THIS MONTH ACTUAL		OBJ/SUB	ANNUAL BUDGET	OPEN PO & CONTRACTS	YTD ACTUAL	REMAINING BALANCE	PERCENT PLAN	PERCENT ACTUAL	....PROJECTED.... OVER/UNDER	%
	_____									
	_____									
	SALARIES									
	REGULAR WAGES	4000								
	OVERTIME	4300								
---			---	---	---	---	---	---	---	---
	SALARIES									
	EMPLOYEE BENEFITS									
	STATE RETIREMENT	4600								
	F.I.C.A. TAXES	4700								
	HOSPITALIZATION INS.	4800								
	UNEMPLOYMENT BENEFITS	4900								
	WORKMAN'S COMPENSATION	4910								
---			---	---	---	---	---	---	---	---
	EMPLOYEE BENEFITS									
---			---	---	---	---	---	---	---	---
	PERSONAL SERVICES									
	_____									
	OFFICE SUPPLIES									
	PAPER	5003								
	PRINTED FORMS	5005								
	OTHER EXPENDABLE OFF.S	5010								
	MINOR OFFICE EQUIP/FUR	5020								
	MICROFILM SUPPLIES	5030								
	SUBSCRIPTIONS,MAGS,MAP	5050								
	MAPS FOR RESALE	5060								
	BOOKS	5070								
	COMPUTER SUPPLIES	5080								
---			---	---	---	---	---	---	---	---
	OFFICE SUPPLIES									
	OPERATING SUPPLIES									
	GAS AND OIL	5250								
	LUBRICANTS	5255								
	MINOR EQUIPMENT	5460								
	OTHER OPERATING MATL/S	5590								
---			---	---	---	---	---	---	---	---
	OPERATING SUPPLIES									

			CITY OF HATTIESBURG							
	001041 - GENERAL FUND-TAX DIVISION		EXPENDITURE REPORT							
			1 Months Ending 10/31/12							
THIS MONTH			ANNUAL	OPEN PO	YTD	REMAINING	PERCENT		....PROJECTED....	
ACTUAL		OBJ/SUB	BUDGET	& CONTRACTS	ACTUAL	BALANCE	PLAN	ACTUAL	OVER/UNDER	%
	REPAIR & MAINTENANCE SP									
	MTR VEHICLE REP. PTS/S	5700								
	OTHER REPAIR/MAINT. SP	5990								
---			---	---	---	---	---	---	---	---
	REPAIR & MAINTENANCE									
---			---	---	---	---	---	---	---	---
	SUPPLIES AND EXPENSES									
	_____									
	PROFESSIONAL SERVICES									
	CONSULTANT SERV/SURVEY	6020								
	ABSTRACTING & RECORDIN	6023								
	LEGAL	6025								
	DATA PROCESSING	6035								
	MICROFILM PROCESSING	6037								
	OTHER PROFESSIONAL SER	6049								
---			---	---	---	---	---	---	---	---
	PROFESSIONAL SERVICE									
	COMMUNICATIONS									
	TELEPHONE AND TELEGRAP	6060								
	POSTAGE	6070								
---			---	---	---	---	---	---	---	---
	COMMUNICATIONS									
	TRANSPORTATION									
	TRAVEL EXPENSE	6110								
	FREIGHT	6120								
	MESSENGER/EXPRESS SERV	6130								
---			---	---	---	---	---	---	---	---
	TRANSPORTATION									
	ADVERTISING									
	ADVERTISING	6150								
---			---	---	---	---	---	---	---	---
	ADVERTISING									
	PRINTING AND BINDING									
	PRINTING	6200								
	BINDING	6205								
	BLUELINES	6210								
---			---	---	---	---	---	---	---	---

CITY OF HATTIESBURG
001041 - GENERAL FUND-TAX DIVISION
EXPENDITURE REPORT
1 Months Ending 10/31/12

THIS MONTH ACTUAL		OBJ/SUB	ANNUAL BUDGET	OPEN PO & CONTRACTS	YTD ACTUAL	REMAINING BALANCE	PERCENT PLAN	PERCENT ACTUAL	....PROJECTED.... OVER/UNDER	%
	PRINTING AND BINDING									
	INSURANCE									
	AUTOMOBILE INSURANCE	6265								
	SURETY AND FORGERY BON	6270								
---			---	---	---	---	---	---	---	---
	INSURANCE									
	REPR/MAINT-OUTSIDE LABO									
	BUILDING R&M	6350								
	OFFICE EQUIPMENT R&M	6365								
	MOTOR VEHICLE EQ. R&M	6384								
	COMMUNICATION EQ. R&M	6390								
	OTHER REPAIRS AND MAIN	6399								
---			---	---	---	---	---	---	---	---
	REPR/MAINT-OUTSIDE L									
	RENTALS									
	OFFICE EQUIPMENT RENT	6410								
---			---	---	---	---	---	---	---	---
	RENTALS									
	OTHER SERVICES & CHARGE									
	REFUNDS	6835								
	PRIVILEGE LICENSE REF	6835 PL								
---			---	---	---	---	---	---	---	---
	REFUNDS									
	DUES AND MEMBERSHIPS	6840								
	REGISTRATION FEE/TUITI	6845								
	SERVICES NOT SPECIFIED	6999								
---			---	---	---	---	---	---	---	---
	OTHER SERVICES & CHA									
---			---	---	---	---	---	---	---	---
	OTHER SERVICES & CHAR									
	_____									
	MACHINERY AND EQUIPMENT									
	HOUSEHOLD FURN/EQUIP.	7320								
	OFFICE FURN/EQUIP.	7325								
	DATA PROCESSING EQUIP.	7327								
	COMMUNICATION EQUIPMEN	7355								
	OTHER EQUIPMENT	7399								

			CITY OF HATTIESBURG							
	001041 - GENERAL FUND-TAX DIVISION		EXPENDITURE REPORT							
			1 Months Ending 10/31/12							
THIS MONTH			ANNUAL	OPEN PO	YTD	REMAINING	PERCENT		....PROJECTED....	
ACTUAL		OBJ/SUB	BUDGET	& CONTRACTS	ACTUAL	BALANCE	PLAN	ACTUAL	OVER/UNDER	%
---			---	---	---	---	---	---	---	---
	MACHINERY AND EQUIPM									
	VEHICLES									
	AUTOMOBILES	7400								
---			---	---	---	---	---	---	---	---
	VEHICLES									
---			---	---	---	---	---	---	---	---
	CAPITAL OUTLAY									
---			---	---	---	---	---	---	---	---
	EXPENDITURES									

CITY OF HATTIESBURG
001042 - GENERAL FUND-ACCOUNTING DIV.
EXPENDITURE REPORT
1 Months Ending 10/31/12

THIS MONTH ACTUAL		OBJ/SUB	ANNUAL BUDGET	OPEN PO & CONTRACTS	YTD ACTUAL	REMAINING BALANCE	PERCENT PLAN	PERCENT ACTUAL	....PROJECTED.... OVER/UNDER	%
	SALARIES									
15,049	REGULAR WAGES	4000	201,029		15,049	185,980	8%	7%	(20,441)	-10%
	DISASTER RECOVERY WAGE	4010								
	OVERTIME	4300								
	DISASTER RECOVERY OVER	4310								
---			---	---	---	---	---	---	---	---
15,049	**SALARIES**		**201,029**		**15,049**	**185,980**	**8%**	**7%**	**(20,441)**	**-10%**
	EMPLOYEE BENEFITS									
2,146	STATE RETIREMENT	4600	28,672		2,146	26,526	8%	7%	(2,920)	-10%
1,136	F.I.C.A. TAXES	4700	15,380		1,136	14,244	8%	7%	(1,748)	-11%
1,940	HOSPITALIZATION INS.	4800	26,100		1,940	24,160	8%	7%	(2,820)	-11%
	UNEMPLOYMENT BENEFITS	4900								
	WORKMAN'S COMPENSATION	4910	700			700	8%	0%	(700)	-100%
---			---	---	---	---	---	---	---	---
5,222	**EMPLOYEE BENEFITS**		**70,852**		**5,222**	**65,630**	**8%**	**7%**	**(8,188)**	**-12%**
---			---	---	---	---	---	---	---	---
20,271	**PERSONAL SERVICES**		**271,881**		**20,271**	**251,610**	**8%**	**7%**	**(28,629)**	**-11%**
	OFFICE SUPPLIES									
	PAPER	5003	450			450	8%	0%	(450)	-100%
	PRINTED FORMS	5005	200			200	8%	0%	(200)	-100%
	OTHER EXPENDABLE OFF.S	5010	1,650			1,650	8%	0%	(1,650)	-100%
	MINOR OFFICE EQUIP/FUR	5020	380			380	8%	0%	(380)	-100%
	MICROFILM SUPPLIES	5030								
	SUBSCRIPTIONS,MAGS,MAP	5050								
	BOOKS	5070								
187	COMPUTER SUPPLIES	5080	950		187	763	8%	20%	1,294	136%
---			---	---	---	---	---	---	---	---
187	**OFFICE SUPPLIES**		**3,630**		**187**	**3,443**	**8%**	**5%**	**(1,386)**	**-38%**
	OPERATING SUPPLIES									
	CLEANING/JANITORIAL SP	5100	800			800	8%	0%	(800)	-100%
	MINOR EQUIPMENT	5460	650			650	8%	0%	(650)	-100%
	OTHER OPERATING MATL/S	5590	180			180	8%	0%	(180)	-100%
---			---	---	---	---	---	---	---	---
	OPERATING SUPPLIES		**1,630**			**1,630**	**8%**	**0%**	**(1,630)**	**-100%**

CITY OF HATTIESBURG
001042 - GENERAL FUND-ACCOUNTING DIV.
EXPENDITURE REPORT
1 Months Ending 10/31/12

THIS MONTH ACTUAL		OBJ/SUB	ANNUAL BUDGET	OPEN PO & CONTRACTS	YTD ACTUAL	REMAINING BALANCE	PERCENT PLAN	PERCENT ACTUAL	....PROJECTED.... OVER/UNDER	%
	REPAIR & MAINTENANCE SP									
	BUILDING MATERIALS & S	5600								
	MINOR COMPUTER EQUIP.	5800	1,500			1,500	8%	0%	(1,500)	-100%
	OTHER REPAIR/MAINT. SP	5990	95			95	8%	0%	(95)	-100%
---			---	---	---	---	---	---	---	---
	REPAIR & MAINTENANCE		**1,595**			**1,595**	**8%**	**0%**	**(1,595)**	**-100%**
---			---	---	---	---	---	---	---	---
187	**SUPPLIES AND EXPENSES**		**6,855**		**187**	**6,668**	**8%**	**3%**	**(4,611)**	**-67%**
	PROFESSIONAL SERVICES									
	CONSULTANT SERV/SURVEY	6020								
	DATA PROCESSING	6035								
	MICROFILM PROCESSING	6037								
	OTHER PROFESSIONAL SER	6049								
---			---	---	---	---	---	---	---	---
	PROFESSIONAL SERVICE									
	COMMUNICATIONS									
12	TELEPHONE AND TELEGRAP	6060	190		12	178	8%	6%	(46)	-24%
	POSTAGE	6070								
---			---	---	---	---	---	---	---	---
12	**COMMUNICATIONS**		**190**		**12**	**178**	**8%**	**6%**	**(46)**	**-24%**
	TRANSPORTATION									
	TRAVEL EXPENSE	6110								
	FREIGHT	6120								
	MESSENGER/EXPRESS SERV	6130	45			45	8%	0%	(45)	-100%
---			---	---	---	---	---	---	---	---
	TRANSPORTATION		**45**			**45**	**8%**	**0%**	**(45)**	**-100%**
	ADVERTISING									
	ADVERTISING	6150								
---			---	---	---	---	---	---	---	---
	ADVERTISING									
	PRINTING AND BINDING									
	PRINTING	6200	1,140			1,140	8%	0%	(1,140)	-100%
	BINDING	6205								
---			---	---	---	---	---	---	---	---
	PRINTING AND BINDING		**1,140**			**1,140**	**8%**	**0%**	**(1,140)**	**-100%**
	INSURANCE									

CITY OF HATTIESBURG
001042 - GENERAL FUND-ACCOUNTING DIV.
EXPENDITURE REPORT
1 Months Ending 10/31/12

THIS MONTH ACTUAL		OBJ/SUB	ANNUAL BUDGET	OPEN PO & CONTRACTS	YTD ACTUAL	REMAINING BALANCE	PERCENT PLAN	PERCENT ACTUAL	....PROJECTED.... OVER/UNDER	%
	SURETY AND FORGERY BON	6270								
---			---	---	---	---	---	---	---	---
	INSURANCE									
	REPR/MAINT-OUTSIDE LABO									
	BUILDING R&M	6350								
	OFFICE EQUIPMENT R&M	6365								
	OTHER REPAIRS AND MAIN	6399	700			700	8%	0%	(700)	-100%
---			---	---	---	---	---	---	---	---
	REPR/MAINT-OUTSIDE L		**700**			**700**	**8%**	**0%**	**(700)**	**-100%**
	RENTALS									
	OFFICE EQUIPMENT RENT	6410								
	OTHER RENT	6449								
---			---	---	---	---	---	---	---	---
	RENTALS									
	OTHER SERVICES & CHARGE									
	DUES AND MEMBERSHIPS	6840								
	REGISTRATION FEE/TUITI	6845								
	SERVICES NOT SPECIFIED	6999								
---			---	---	---	---	---	---	---	---
	OTHER SERVICES & CHA									
---			---	---	---	---	---	---	---	---
12	**OTHER SERVICES & CHAR**		**2,075**		**12**	**2,063**	**8%**	**1%**	**(1,931)**	**-93%**
	MACHINERY AND EQUIPMENT									
	OFFICE FURN/EQUIP.	7325								
	DATA PROCESSING EQUIP.	7327								
	OTHER EQUIPMENT	7399								
---			---	---	---	---	---	---	---	---
	MACHINERY AND EQUIPM									
---			---	---	---	---	---	---	---	---
	CAPITAL OUTLAY									
---			---	---	---	---	---	---	---	---
20,470	**EXPENDITURES**		**280,811**		**20,470**	**260,341**	**8%**	**7%**	**(35,171)**	**-13%**

			CITY OF HATTIESBURG							
	001045 - GENERAL FUND-PURCHASING DIV.		EXPENDITURE REPORT							
			1 Months Ending 10/31/12							
THIS MONTH			ANNUAL	OPEN PO	YTD	REMAINING	PERCENT		....PROJECTED....	
ACTUAL		OBJ/SUB	BUDGET	& CONTRACTS	ACTUAL	BALANCE	PLAN	ACTUAL	OVER/UNDER	%
	SALARIES									
7,460	REGULAR WAGES	4000	96,982		7,460	89,522	8%	8%	(7,462)	-8%
	DISASTER RECOVERY WAGE	4010								
	OVERTIME	4300								
	DISASTER RECOVERY OVER	4310								
---			---	---	---	---	---	---	---	---
7,460	**SALARIES**		**96,982**		**7,460**	**89,522**	**8%**	**8%**	**(7,462)**	**-8%**
	EMPLOYEE BENEFITS									
1,064	STATE RETIREMENT	4600	13,830		1,064	12,766	8%	8%	(1,062)	-8%
547	F.I.C.A. TAXES	4700	7,420		547	6,873	8%	7%	(856)	-12%
1,164	HOSPITALIZATION INS.	4800	15,660		1,164	14,496	8%	7%	(1,692)	-11%
	UNEMPLOYMENT BENEFITS	4900								
	WORKMAN'S COMPENSATION	4910	490			490	8%	0%	(490)	-100%
---			---	---	---	---	---	---	---	---
2,775	**EMPLOYEE BENEFITS**		**37,400**		**2,775**	**34,625**	**8%**	**7%**	**(4,100)**	**-11%**
---			---	---	---	---	---	---	---	---
10,235	**PERSONAL SERVICES**		**134,382**		**10,235**	**124,147**	**8%**	**8%**	**(11,562)**	**-9%**
	OFFICE SUPPLIES									
200	PAPER	5003	2,600		200	2,400	8%	8%	(200)	-8%
	PRINTED FORMS	5005								
	OTHER EXPENDABLE OFF.S	5010	1,500			1,500	8%	0%	(1,500)	-100%
	MINOR OFFICE EQUIP/FUR	5020	1,753			1,753	8%	0%	(1,753)	-100%
	SUBSCRIPTIONS,MAGS,MAP	5050								
	BOOKS	5070	400			400	8%	0%	(400)	-100%
	COMPUTER SUPPLIES	5080								
---			---	---	---	---	---	---	---	---
200	**OFFICE SUPPLIES**		**6,253**		**200**	**6,053**	**8%**	**3%**	**(3,853)**	**-62%**
	OPERATING SUPPLIES									
	MINOR EQUIPMENT	5460	150			150	8%	0%	(150)	-100%
	OTHER OPERATING MATL/S	5590	225			225	8%	0%	(225)	-100%
---			---	---	---	---	---	---	---	---
	OPERATING SUPPLIES		**375**			**375**	**8%**	**0%**	**(375)**	**-100%**
---			---	---	---	---	---	---	---	---
200	**SUPPLIES AND EXPENSES**		**6,628**		**200**	**6,428**	**8%**	**3%**	**(4,228)**	**-64%**

			CITY OF HATTIESBURG							
	001045 - GENERAL FUND-PURCHASING DIV.		EXPENDITURE REPORT							
			1 Months Ending 10/31/12							
THIS MONTH			ANNUAL	OPEN PO	YTD	REMAINING	PERCENT		....PROJECTED....	
ACTUAL		OBJ/SUB	BUDGET	& CONTRACTS	ACTUAL	BALANCE	PLAN	ACTUAL	OVER/UNDER	%
	PROFESSIONAL SERVICES									
	CONSULTANT SERV/SURVEY	6020								
	DATA PROCESSING	6035								
	OTHER PROFESSIONAL SER	6049								
---			---	---	---	---	---	---	---	---
	PROFESSIONAL SERVICE									
	COMMUNICATIONS									
	TELEPHONE AND TELEGRAP	6060	100			100	8%	0%	(100)	-100%
	POSTAGE	6070								
---			---	---	---	---	---	---	---	---
	COMMUNICATIONS		**100**			**100**	**8%**	**0%**	**(100)**	**-100%**
	TRANSPORTATION									
	TRAVEL EXPENSE	6110								
	FREIGHT	6120								
	MESSENGER/EXPRESS SERV	6130								
---			---	---	---	---	---	---	---	---
	TRANSPORTATION									
	ADVERTISING									
	ADVERTISING	6150								
---			---	---	---	---	---	---	---	---
	ADVERTISING									
	PRINTING AND BINDING									
	PRINTING	6200								
	BINDING	6205								
---			---	---	---	---	---	---	---	---
	PRINTING AND BINDING									
	INSURANCE									
	SURETY AND FORGERY BON	6270								
---			---	---	---	---	---	---	---	---
	INSURANCE									
	REPR/MAINT-OUTSIDE LABO									
720	OFFICE EQUIPMENT R&M	6365	800		720	80	8%	90%	7,840	980%
	OTHER REPAIRS AND MAIN	6399								
---			---	---	---	---	---	---	---	---
720	**REPR/MAINT-OUTSIDE L**		**800**		**720**	**80**	**8%**	**90%**	**7,840**	**980%**
	RENTALS									

			CITY OF HATTIESBURG							
	001045 - GENERAL FUND-PURCHASING DIV.		EXPENDITURE REPORT							
			1 Months Ending 10/31/12							
THIS MONTH			ANNUAL	OPEN PO	YTD	REMAINING	PERCENT		....PROJECTED....	
ACTUAL		OBJ/SUB	BUDGET	& CONTRACTS	ACTUAL	BALANCE	PLAN	ACTUAL	OVER/UNDER	%
	OFFICE EQUIPMENT RENT	6410								
---			---	---	---	---	---	---	---	---
	RENTALS									
	OTHER SERVICES & CHARGE									
	DUES AND MEMBERSHIPS	6840								
	REGISTRATION FEE/TUITI	6845								
	SERVICES NOT SPECIFIED	6999								
---			---	---	---	---	---	---	---	---
	OTHER SERVICES & CHA									
---			---	---	---	---	---	---	---	---
720	**OTHER SERVICES & CHAR**		**900**		**720**	**180**	**8%**	**80%**	**7,740**	**860%**
	BUILDING/BLD IMPROVEMEN									
	BUILDING IMPROVEMENTS	7150								
	OFFICE IMPROVEMENTS	7150 23								
---			---	---	---	---	---	---	---	---
	BUILDING IMPROVEMEN									
---			---	---	---	---	---	---	---	---
	BUILDING/BLD IMPROVE									
	MACHINERY AND EQUIPMENT									
	OFFICE FURN/EQUIP.	7325								
	DATA PROCESSING EQUIP.	7327								
	OTHER EQUIPMENT	7399								
---			---	---	---	---	---	---	---	---
	MACHINERY AND EQUIPM									
---			---	---	---	---	---	---	---	---
	CAPITAL OUTLAY									
---			---	---	---	---	---	---	---	---
11,155	**EXPENDITURES**		**141,910**		**11,155**	**130,755**	**8%**	**8%**	**(8,050)**	**-6%**

CITY OF HATTIESBURG
001060 - GENERAL FUND-CITY ATTORNEY
EXPENDITURE REPORT
1 Months Ending 10/31/12

THIS MONTH ACTUAL		OBJ/SUB	ANNUAL BUDGET	OPEN PO & CONTRACTS	YTD ACTUAL	REMAINING BALANCE	PERCENT PLAN	PERCENT ACTUAL	....PROJECTED.... OVER/UNDER	%
	SALARIES									
5,538	REGULAR WAGES	4000	72,000		5,538	66,462	8%	8%	(5,544)	-8%
	OVERTIME	4300								
5,538	**SALARIES**		**72,000**		**5,538**	**66,462**	**8%**	**8%**	**(5,544)**	**-8%**
	EMPLOYEE BENEFITS									
790	STATE RETIREMENT	4600	10,270		790	9,480	8%	8%	(790)	-8%
394	F.I.C.A. TAXES	4700	5,510		394	5,116	8%	7%	(782)	-14%
388	HOSPITALIZATION INS.	4800	5,220		388	4,832	8%	7%	(564)	-11%
	UNEMPLOYMENT BENEFITS	4900								
	WORKMAN'S COMPENSATION	4910	242			242	8%	0%	(242)	-100%
1,572	**EMPLOYEE BENEFITS**		**21,242**		**1,572**	**19,670**	**8%**	**7%**	**(2,378)**	**-11%**
7,111	**PERSONAL SERVICES**		**93,242**		**7,111**	**86,131**	**8%**	**8%**	**(7,910)**	**-8%**
	OFFICE SUPPLIES									
	PAPER	5003								
	PRINTED FORMS	5005								
	OTHER EXPENDABLE OFF.S	5010								
	MINOR OFFICE EQUIP/FUR	5020								
	BOOKS	5070								
	OTHER OPERATING MATL/S	5590								
	OFFICE SUPPLIES									
	SUPPLIES AND EXPENSES									
	PROFESSIONAL SERVICES									
	LEGAL	6025	17,000			17,000	8%	0%	(17,000)	-100%
	OTHER PROFESSIONAL SER	6049								
	PROFESSIONAL SERVICE		**17,000**			**17,000**	**8%**	**0%**	**(17,000)**	**-100%**
	COMMUNICATIONS									
	TELEPHONE AND TELEGRAP	6060								

			CITY OF HATTIESBURG							
	001060 - GENERAL FUND-CITY ATTORNEY		EXPENDITURE REPORT							
			1 Months Ending 10/31/12							
THIS MONTH			ANNUAL	OPEN PO	YTD	REMAINING	PERCENT		....PROJECTED....	
ACTUAL		OBJ/SUB	BUDGET	& CONTRACTS	ACTUAL	BALANCE	PLAN	ACTUAL	OVER/UNDER	%
	POSTAGE	6070								
---			---	---	---	---	---	---	---	---
	COMMUNICATIONS									
	TRANSPORTATION									
	TRAVEL EXPENSE	6110	1,000			1,000	8%	0%	(1,000)	-100%
---			---	---	---	---	---	---	---	---
	TRANSPORTATION		**1,000**			**1,000**	**8%**	**0%**	**(1,000)**	**-100%**
	PRINTING AND BINDING									
	PRINTING	6200								
---			---	---	---	---	---	---	---	---
	PRINTING AND BINDING									
	OTHER SERVICES & CHARGE									
	COURT COSTS	6710	100			100	8%	0%	(100)	-100%
	DUES AND MEMBERSHIPS	6840	100			100	8%	0%	(100)	-100%
	REGISTRATION FEE/TUITI	6845	300			300	8%	0%	(300)	-100%
---			---	---	---	---	---	---	---	---
	OTHER SERVICES & CHA		**500**			**500**	**8%**	**0%**	**(500)**	**-100%**
---			---	---	---	---	---	---	---	---
	OTHER SERVICES & CHAR		**18,500**			**18,500**	**8%**	**0%**	**(18,500)**	**-100%**
	_____									
	MACHINERY AND EQUIPMENT									
---			---	---	---	---	---	---	---	---
	CAPITAL OUTLAY									
---			---	---	---	---	---	---	---	---
7,111	**EXPENDITURES**		**111,742**		**7,111**	**104,631**	**8%**	**6%**	**(26,410)**	**-24%**

CITY OF HATTIESBURG
001080 - GENERAL FUND-HUMAN RESOURCES
EXPENDITURE REPORT
1 Months Ending 10/31/12

THIS MONTH ACTUAL		OBJ/SUB	ANNUAL BUDGET	OPEN PO & CONTRACTS	YTD ACTUAL	REMAINING BALANCE	PERCENT PLAN	PERCENT ACTUAL	....PROJECTED.... OVER/UNDER	%
	SALARIES									
9,380	REGULAR WAGES	4000	143,309		9,380	133,929	8%	7%	(30,749)	-21%
	DISASTER RECOVERY WAGE	4010								
	OVERTIME	4300								
	DISASTER RECOVERY OVER	4310								
9,380	**SALARIES**		**143,309**		**9,380**	**133,929**	**8%**	**7%**	**(30,749)**	**-21%**
	EMPLOYEE BENEFITS									
1,338	STATE RETIREMENT	4600	20,435		1,338	19,097	8%	7%	(4,379)	-21%
687	F.I.C.A. TAXES	4700	10,965		687	10,278	8%	6%	(2,721)	-25%
1,164	HOSPITALIZATION INS.	4800	20,880		1,164	19,716	8%	6%	(6,912)	-33%
	UNEMPLOYMENT BENEFITS	4900								
	WORKMAN'S COMPENSATION	4910	540			540	8%	0%	(540)	-100%
3,189	**EMPLOYEE BENEFITS**		**52,820**		**3,189**	**49,631**	**8%**	**6%**	**(14,552)**	**-28%**
12,569	**PERSONAL SERVICES**		**196,129**		**12,569**	**183,560**	**8%**	**6%**	**(45,301)**	**-23%**
	OFFICE SUPPLIES									
	PAPER	5003	2,000			2,000	8%	0%	(2,000)	-100%
	PRINTED FORMS	5005	1,420			1,420	8%	0%	(1,420)	-100%
755	OTHER EXPENDABLE OFF.S	5010	2,750		755	1,995	8%	27%	6,310	229%
	MINOR OFFICE EQUIP/FUR	5020	1,500			1,500	8%	0%	(1,500)	-100%
	SUBSCRIPTIONS,MAGS,MAP	5050	1,029			1,029	8%	0%	(1,029)	-100%
	BOOKS	5070	221			221	8%	0%	(221)	-100%
	COMPUTER SUPPLIES	5080								
755	**OFFICE SUPPLIES**		**8,920**		**755**	**8,165**	**8%**	**8%**	**140**	**2%**
	OPERATING SUPPLIES									
	MINOR EQUIPMENT	5460								
	OTHER OPERATING MATL/S	5590								
	OPERATING SUPPLIES									
755	**SUPPLIES AND EXPENSES**		**8,920**		**755**	**8,165**	**8%**	**8%**	**140**	**2%**

			CITY OF HATTIESBURG							
	001080 - GENERAL FUND-HUMAN RESOURCES		EXPENDITURE REPORT							
			1 Months Ending 10/31/12							
THIS MONTH			ANNUAL	OPEN PO	YTD	REMAINING	PERCENT		....PROJECTED....	
ACTUAL		OBJ/SUB	BUDGET	& CONTRACTS	ACTUAL	BALANCE	PLAN	ACTUAL	OVER/UNDER	%
	PROFESSIONAL SERVICES									
	CONSULTANT SERV/SURVEY	6020								
	OTHER PROFESSIONAL SER	6049								
	PROFESSIONAL SERVICE									
	COMMUNICATIONS									
12	TELEPHONE AND TELEGRAP	6060	100		12	88	8%	12%	44	44%
	POSTAGE	6070	20			20	8%	0%	(20)	-100%
12	**COMMUNICATIONS**		**120**		**12**	**108**	**8%**	**10%**	**24**	**20%**
	TRANSPORTATION									
	TRAVEL EXPENSE	6110								
	FREIGHT	6120								
	MESSENGER/EXPRESS SERV	6130								
	TRANSPORTATION									
	ADVERTISING									
	ADVERTISING	6150								
	ADVERTISING									
	PRINTING AND BINDING									
	PRINTING	6200	1,000			1,000	8%	0%	(1,000)	-100%
	BINDING	6205								
	PRINTING AND BINDING		**1,000**			**1,000**	**8%**	**0%**	**(1,000)**	**-100%**
	INSURANCE									
	SURETY AND FORGERY BON	6270								
	INSURANCE									
	REPR/MAINT-OUTSIDE LABO									
	BUILDING R&M	6350								
	OFFICE EQUIPMENT R&M	6365	3,320			3,320	8%	0%	(3,320)	-100%
	REPR/MAINT-OUTSIDE L		**3,320**			**3,320**	**8%**	**0%**	**(3,320)**	**-100%**
	OTHER SERVICES & CHARGE									
	DUES AND MEMBERSHIPS	6840	200			200	8%	0%	(200)	-100%

			CITY OF HATTIESBURG							
	001080 - GENERAL FUND-HUMAN RESOURCES		EXPENDITURE REPORT							
			1 Months Ending 10/31/12							
THIS MONTH			ANNUAL	OPEN PO	YTD	REMAINING	PERCENT		....PROJECTED....	
ACTUAL		OBJ/SUB	BUDGET	& CONTRACTS	ACTUAL	BALANCE	PLAN	ACTUAL	OVER/UNDER	%
	REGISTRATION FEE/TUITI	6845								
	SERVICES NOT SPECIFIED	6999								
---			---	---	---	---	---	---	---	---
	OTHER SERVICES & CHA		**200**			**200**	**8%**	**0%**	**(200)**	**-100%**
---			---	---	---	---	---	---	---	---
12	**OTHER SERVICES & CHAR**		**4,640**		**12**	**4,628**	**8%**	**0%**	**(4,496)**	**-97%**
	MACHINERY AND EQUIPMENT									
	OFFICE FURN/EQUIP.	7325								
	DATA PROCESSING EQUIP.	7327								
---			---	---	---	---	---	---	---	---
	MACHINERY AND EQUIPM									
---			---	---	---	---	---	---	---	---
	CAPITAL OUTLAY									
---			---	---	---	---	---	---	---	---
13,336	**EXPENDITURES**		**209,689**		**13,336**	**196,353**	**8%**	**6%**	**(49,657)**	**-24%**

			CITY OF HATTIESBURG							
	001081 - GENERAL FUND-LOSS CONTROL		EXPENDITURE REPORT							
			1 Months Ending 10/31/12							
THIS MONTH			ANNUAL	OPEN PO	YTD	REMAINING	PERCENT		....PROJECTED....	
ACTUAL		OBJ/SUB	BUDGET	& CONTRACTS	ACTUAL	BALANCE	PLAN	ACTUAL	OVER/UNDER	%
	SALARIES									
5,930	REGULAR WAGES	4000	77,087		5,930	71,157	8%	8%	(5,927)	-8%
	DISASTER RECOVERY WAGE	4010								
	OVERTIME	4300								
	DISASTER RECOVERY OVER	4310								
---			---	---	---	---	---	---	---	---
5,930	**SALARIES**		**77,087**		**5,930**	**71,157**	**8%**	**8%**	**(5,927)**	**-8%**
	EMPLOYEE BENEFITS									
846	STATE RETIREMENT	4600	11,000		846	10,154	8%	8%	(848)	-8%
429	F.I.C.A. TAXES	4700	5,900		429	5,471	8%	7%	(752)	-13%
776	HOSPITALIZATION INS.	4800	10,440		776	9,664	8%	7%	(1,128)	-11%
	UNEMPLOYMENT BENEFITS	4900								
	WORKMAN'S COMPENSATION	4910	302			302	8%	0%	(302)	-100%
---			---	---	---	---	---	---	---	---
2,051	**EMPLOYEE BENEFITS**		**27,642**		**2,051**	**25,591**	**8%**	**7%**	**(3,030)**	**-11%**
---			---	---	---	---	---	---	---	---
7,980	**PERSONAL SERVICES**		**104,729**		**7,980**	**96,749**	**8%**	**8%**	**(8,969)**	**-9%**
	OFFICE SUPPLIES									
	PAPER	5003								
	PRINTED FORMS	5005	150			150	8%	0%	(150)	-100%
	OTHER EXPENDABLE OFF.S	5010	1,000			1,000	8%	0%	(1,000)	-100%
(22)	MINOR OFFICE EQUIP/FUR	5020	300		22-	322	8%	7%	(36)	-12%
	PHOTO SUPPLIES	5040								
	SUBSCRIPTIONS,MAGS,MAP	5050	165			165	8%	0%	(165)	-100%
	BOOKS	5070	280			280	8%	0%	(280)	-100%
	COMPUTER SUPPLIES	5080								
---			---	---	---	---	---	---	---	---
(22)	**OFFICE SUPPLIES**		**1,895**		**22-**	**1,917**	**8%**	**1%**	**(1,631)**	**-86%**
	OPERATING SUPPLIES									
	CLEANING/JANITORIAL SP	5100								
	HOUSEHOLD SUPPLIES	5110								
	MEDICAL SUPPLIES	5120	150			150	8%	0%	(150)	-100%
	GAS AND OIL	5250	1,900			1,900	8%	0%	(1,900)	-100%
	LUBRICANTS	5255								

CITY OF HATTIESBURG
001081 - GENERAL FUND-LOSS CONTROL
EXPENDITURE REPORT
1 Months Ending 10/31/12

THIS MONTH ACTUAL		OBJ/SUB	ANNUAL BUDGET	OPEN PO & CONTRACTS	YTD ACTUAL	REMAINING BALANCE	PERCENT PLAN	PERCENT ACTUAL	....PROJECTED.... OVER/UNDER	%
217	WEARING APPAREL	5355	300		217	83	8%	72%	2,304	768%
	MINOR EQUIPMENT	5460	500			500	8%	0%	(500)	-100%
	OTHER OPERATING MATL/S	5590								
---			---	---	---	---	---	---	---	---
217	**OPERATING SUPPLIES**		**2,850**		**217**	**2,633**	**8%**	**8%**	**(246)**	**-9%**
	REPAIR & MAINTENANCE SP									
	BUILDING MATERIALS & S	5600								
	MTR VEHICLE REP. PTS/S	5700	400			400	8%	0%	(400)	-100%
	COMMUNICATION REPAIR P	5750	180			180	8%	0%	(180)	-100%
	OTHER REPAIR/MAINT. SP	5990	180			180	8%	0%	(180)	-100%
---			---	---	---	---	---	---	---	---
	REPAIR & MAINTENANCE		**760**			**760**	**8%**	**0%**	**(760)**	**-100%**
---			---	---	---	---	---	---	---	---
195	**SUPPLIES AND EXPENSES**		**5,505**		**195**	**5,310**	**8%**	**4%**	**(3,165)**	**-57%**
	_____									
	COMMUNICATIONS									
50	TELEPHONE AND TELEGRAP	6060	760		50	710	8%	7%	(160)	-21%
	POSTAGE	6070								
---			---	---	---	---	---	---	---	---
50	**COMMUNICATIONS**		**760**		**50**	**710**	**8%**	**7%**	**(160)**	**-21%**
	TRANSPORTATION									
	TRAVEL EXPENSE	6110								
	FREIGHT	6120								
	MESSENGER/EXPRESS SERV	6130								
---			---	---	---	---	---	---	---	---
	TRANSPORTATION									
	ADVERTISING									
	ADVERTISING	6150								
---			---	---	---	---	---	---	---	---
	ADVERTISING									
	PRINTING AND BINDING									
	PRINTING	6200								
	FILM PROCESSING	6240								
---			---	---	---	---	---	---	---	---
	PRINTING AND BINDING									
	INSURANCE									
	AUTOMOBILE INSURANCE	6265								

CITY OF HATTIESBURG
001081 - GENERAL FUND-LOSS CONTROL
EXPENDITURE REPORT
1 Months Ending 10/31/12

THIS MONTH ACTUAL		OBJ/SUB	ANNUAL BUDGET	OPEN PO & CONTRACTS	YTD ACTUAL	REMAINING BALANCE	PERCENT PLAN	PERCENT ACTUAL	....PROJECTED.... OVER/UNDER	%
	SURETY AND FORGERY BON	6270								
	INSURANCE									
	REPR/MAINT-OUTSIDE LABO									
	OFFICE EQUIPMENT R&M	6365								
	HOUSEHOLD EQUIPMENT R&	6370								
	MOTOR VEHICLE EQ. R&M	6384	300			300	8%	0%	(300)	-100%
	COMMUNICATION EQ. R&M	6390								
	CLEANING AND PAINTING	6392								
	OTHER REPAIRS AND MAIN	6399	1,885			1,885	8%	0%	(1,885)	-100%
	REPR/MAINT-OUTSIDE L		**2,185**			**2,185**	**8%**	**0%**	**(2,185)**	**-100%**
	RENTALS									
	OTHER RENT	6449								
	RENTALS									
	OTHER SERVICES & CHARGE									
	DUES AND MEMBERSHIPS	6840								
	REGISTRATION FEE/TUITI	6845								
	SERVICES NOT SPECIFIED	6999	1,900			1,900	8%	0%	(1,900)	-100%
	OTHER SERVICES & CHA		**1,900**			**1,900**	**8%**	**0%**	**(1,900)**	**-100%**
50	**OTHER SERVICES & CHAR**		**4,845**		**50**	**4,795**	**8%**	**1%**	**(4,245)**	**-88%**
	MACHINERY AND EQUIPMENT									
	OFFICE FURN/EQUIP.	7325								
	DATA PROCESSING EQUIP.	7327								
	COMMUNICATION EQUIPMEN	7355								
	OTHER EQUIPMENT	7399								
	MACHINERY AND EQUIPM									
	VEHICLES									
	AUTOMOBILES	7400								
	VEHICLES									

			CITY OF HATTIESBURG							
	001081 - GENERAL FUND-LOSS CONTROL		EXPENDITURE REPORT							
			1 Months Ending 10/31/12							
THIS MONTH			ANNUAL	OPEN PO	YTD	REMAINING	PERCENT		....PROJECTED....	
ACTUAL		OBJ/SUB	BUDGET	& CONTRACTS	ACTUAL	BALANCE	PLAN	ACTUAL	OVER/UNDER	%
	CAPITAL OUTLAY									
----------			---------	---------	---------	---------	-----	-----	--------	-----
8,225	**EXPENDITURES**		**115,079**		**8,225**	**106,854**	**8%**	**7%**	**(16,379)**	**-14%**

CITY OF HATTIESBURG
001090 - GENERAL FUND-URBAN DEVELOPMT
EXPENDITURE REPORT
1 Months Ending 10/31/12

THIS MONTH ACTUAL		OBJ/SUB	ANNUAL BUDGET	OPEN PO & CONTRACTS	YTD ACTUAL	REMAINING BALANCE	PERCENT PLAN	PERCENT ACTUAL	....PROJECTED.... OVER/UNDER	%
	SALARIES									
21,135	REGULAR WAGES	4000	331,426		21,135	310,291	8%	6%	(77,806)	-23%
	DISASTER RECOVERY WAGE	4010								
	OVERTIME	4300								
	DISASTER RECOVERY OVER	4310								
---			---	---	---	---	---	---	---	---
21,135	**SALARIES**		**331,426**		**21,135**	**310,291**	**8%**	**6%**	**(77,806)**	**-23%**
	EMPLOYEE BENEFITS									
3,014	STATE RETIREMENT	4600	47,260		3,014	44,246	8%	6%	(11,092)	-23%
1,596	F.I.C.A. TAXES	4700	25,360		1,596	23,764	8%	6%	(6,208)	-24%
3,492	HOSPITALIZATION INS.	4800	52,200		3,492	48,708	8%	7%	(10,296)	-20%
	UNEMPLOYMENT BENEFITS	4900								
	WORKMAN'S COMPENSATION	4910	2,870			2,870	8%	0%	(2,870)	-100%
---			---	---	---	---	---	---	---	---
8,102	**EMPLOYEE BENEFITS**		**127,690**		**8,102**	**119,588**	**8%**	**6%**	**(30,466)**	**-24%**
---			---	---	---	---	---	---	---	---
29,236	**PERSONAL SERVICES**		**459,116**		**29,236**	**429,880**	**8%**	**6%**	**(108,284)**	**-24%**
	OFFICE SUPPLIES									
	PAPER	5003	700			700	8%	0%	(700)	-100%
	PRINTED FORMS	5005								
483	OTHER EXPENDABLE OFF.S	5010	4,610		483	4,127	8%	10%	1,186	26%
82	N.I.P. SUPPLIES	5011	13,400		82	13,318	8%	1%	(12,416)	-93%
	CITIZENS CORPS GRANT S	5012								
	MIDTOWN STUDY GRANT SU	5013	1,500			1,500	8%	0%	(1,500)	-100%
164	MINOR OFFICE EQUIP/FUR	5020	1,500	100	164	1,236	8%	11%	468	31%
	PHOTO SUPPLIES	5040								
	SUBSCRIPTIONS,MAGS,MAP	5050								
539	BOOKS	5070	400		539	(139)	8%	135%	6,068	517%
(363)	COMPUTER SUPPLIES	5080	1,000		363-	1,363	8%	36%	3,356	336%
---			---	---	---	---	---	---	---	---
905	**OFFICE SUPPLIES**		**23,110**	**100**	**905**	**22,105**	**8%**	**4%**	**(12,250)**	**-53%**
	OPERATING SUPPLIES									
72	FOOD	5115	500		72	428	8%	14%	364	73%
	GAS AND OIL	5250	2,000			2,000	8%	0%	(2,000)	-100%

CITY OF HATTIESBURG
001090 - GENERAL FUND-URBAN DEVELOPMT
EXPENDITURE REPORT
1 Months Ending 10/31/12

THIS MONTH ACTUAL		OBJ/SUB	ANNUAL BUDGET	OPEN PO & CONTRACTS	YTD ACTUAL	REMAINING BALANCE	PERCENT PLAN	PERCENT ACTUAL	....PROJECTED.... OVER/UNDER	%
	LUBRICANTS	5255								
	MINOR EQUIPMENT	5460	100			100	8%	0%	(100)	-100%
	OTHER OPERATING MATL/S	5590	500			500	8%	0%	(500)	-100%
---			---	---	---	---	---	---	---	---
72	**OPERATING SUPPLIES**		**3,100**		**72**	**3,028**	**8%**	**2%**	**(2,236)**	**-72%**
	REPAIR & MAINTENANCE SP									
	BUILDING MATERIALS & S	5600								
	PAINT AND PAINTING SPL	5650	600			600	8%	0%	(600)	-100%
	MTR VEHICLE REP. PTS/S	5700	150			150	8%	0%	(150)	-100%
	OTHER REPAIR/MAINT. SP	5990								
---			---	---	---	---	---	---	---	---
	REPAIR & MAINTENANCE		**750**			**750**	**8%**	**0%**	**(750)**	**-100%**
---			---	---	---	---	---	---	---	---
977	**SUPPLIES AND EXPENSES**		**26,960**	**100**	**977**	**25,883**	**8%**	**4%**	**(15,236)**	**-57%**
	_____									
	PROFESSIONAL SERVICES									
	ENGINEERING	6015								
	CONSULTANT SERV/SURVEY	6020	100,000			100,000	8%	0%	(100,000)	-100%
	CONSULTANT SERV-MIDTOW	6022	49,872			49,872	8%	0%	(49,872)	-100%
	ABSTRACTING & RECORDIN	6023								
	LEGAL	6025								
	OTHER PROFESSIONAL SER	6049	6,500			6,500	8%	0%	(6,500)	-100%
---			---	---	---	---	---	---	---	---
	PROFESSIONAL SERVICE		**156,372**			**156,372**	**8%**	**0%**	**(156,372)**	**-100%**
	COMMUNICATIONS									
213	TELEPHONE AND TELEGRAP	6060	2,000		213	1,787	8%	11%	556	28%
	POSTAGE	6070	100			100	8%	0%	(100)	-100%
---			---	---	---	---	---	---	---	---
213	**COMMUNICATIONS**		**2,100**		**213**	**1,887**	**8%**	**10%**	**456**	**22%**
	TRANSPORTATION									
	TRAVEL EXPENSE	6110	6,650			6,650	8%	0%	(6,650)	-100%
	TRVL EXP-MIDTOWN STDY	6111	4,102			4,102	8%	0%	(4,102)	-100%
	FREIGHT	6120								
16	MESSENGER/EXPRESS SERV	6130	100		16	84	8%	16%	92	92%
---			---	---	---	---	---	---	---	---
16	**TRANSPORTATION**		**10,852**		**16**	**10,836**	**8%**	**0%**	**(10,660)**	**-98%**
	ADVERTISING									

			CITY OF HATTIESBURG							
	001090 - GENERAL FUND-URBAN DEVELOPMT		EXPENDITURE REPORT							
			1 Months Ending 10/31/12							
THIS MONTH			ANNUAL	OPEN PO	YTD	REMAINING	PERCENT		....PROJECTED....	
ACTUAL		OBJ/SUB	BUDGET	& CONTRACTS	ACTUAL	BALANCE	PLAN	ACTUAL	OVER/UNDER	%
	ADVERTISING	6150								
---			---	---	---	---	---	---	---	---
	ADVERTISING									
	PRINTING AND BINDING									
2,372	PRINTING	6200	5,917		2,372	3,545	8%	40%	22,547	381%
	PRINTING-GRANT RELATED	6202								
	BLUELINES	6210								
	FILM PROCESSING	6240								
---			---	---	---	---	---	---	---	---
2,372	**PRINTING AND BINDING**		**5,917**		**2,372**	**3,545**	**8%**	**40%**	**22,547**	**381%**
	INSURANCE									
	AUTOMOBILE INSURANCE	6265								
	SURETY AND FORGERY BON	6270								
---			---	---	---	---	---	---	---	---
	INSURANCE									
	REPR/MAINT-OUTSIDE LABO									
	BUILDING R&M	6350								
	OFFICE EQUIPMENT R&M	6365								
	MOTOR VEHICLE EQ. R&M	6384								
	SIGN PAINTING	6396								
	OTHER REPAIRS AND MAIN	6399								
---			---	---	---	---	---	---	---	---
	REPR/MAINT-OUTSIDE L									
	RENTALS									
	OFFICE EQUIPMENT RENT	6410	1,600			1,600	8%	0%	(1,600)	-100%
	OTHER RENT	6449								
---			---	---	---	---	---	---	---	---
	RENTALS		**1,600**			**1,600**	**8%**	**0%**	**(1,600)**	**-100%**
	OTHER SERVICES & CHARGE									
	EXHIBITIONS & PROMOTIO	6500								
	DUES AND MEMBERSHIPS	6840	1,500			1,500	8%	0%	(1,500)	-100%
	REGISTRATION FEE/TUITI	6845	2,500			2,500	8%	0%	(2,500)	-100%
	SERVICES NOT SPECIFIED	6999								
---			---	---	---	---	---	---	---	---
	OTHER SERVICES & CHA		**4,000**			**4,000**	**8%**	**0%**	**(4,000)**	**-100%**
---			---	---	---	---	---	---	---	---
2,601	**OTHER SERVICES & CHAR**		**180,841**		**2,601**	**178,240**	**8%**	**1%**	**(149,629)**	**-83%**

			CITY OF HATTIESBURG							
	001090 - GENERAL FUND-URBAN DEVELOPMT		EXPENDITURE REPORT							
			1 Months Ending 10/31/12							
THIS MONTH			ANNUAL	OPEN PO	YTD	REMAINING	PERCENT		....PROJECTED....	
ACTUAL		OBJ/SUB	BUDGET	& CONTRACTS	ACTUAL	BALANCE	PLAN	ACTUAL	OVER/UNDER	%
	_____									
	MACHINERY AND EQUIPMENT									
	PHOTOGRAPHIC EQUIP.	7308								
	OFFICE FURN/EQUIP.	7325								
	DATA PROCESSING EQUIP.	7327								
---			---	---	---	---	---	---	---	---
	MACHINERY AND EQUIPM									
	VEHICLES									
	AUTOMOBILES	7400								
	PICK UP TRUCKS	7420								
---			---	---	---	---	---	---	---	---
	VEHICLES									
---			---	---	---	---	---	---	---	---
	CAPITAL OUTLAY									
---			---	---	---	---	---	---	---	---
32,815	**EXPENDITURES**		**666,917**	**100**	**32,815**	**634,002**	**8%**	**5%**	**(273,137)**	**-41%**

CITY OF HATTIESBURG
001091 - GENERAL FUND-INFO TECHNOLOGY
EXPENDITURE REPORT
1 Months Ending 10/31/12

THIS MONTH ACTUAL		OBJ/SUB	ANNUAL BUDGET	OPEN PO & CONTRACTS	YTD ACTUAL	REMAINING BALANCE	PERCENT PLAN	PERCENT ACTUAL	....PROJECTED.... OVER/UNDER	%
	SALARIES									
21,884	REGULAR WAGES	4000	284,494		21,884	262,610	8%	8%	(21,886)	-8%
	DISASTER RECOVERY WAGE	4010								
	OVERTIME	4300								
	DISASTER RECOVERY OVER	4310								
---			---	---	---	---	---	---	---	---
21,884	**SALARIES**		**284,494**		**21,884**	**262,610**	**8%**	**8%**	**(21,886)**	**-8%**
	EMPLOYEE BENEFITS									
3,121	STATE RETIREMENT	4600	40,570		3,121	37,449	8%	8%	(3,118)	-8%
1,596	F.I.C.A. TAXES	4700	21,770		1,596	20,174	8%	7%	(2,618)	-12%
3,104	HOSPITALIZATION INS.	4800	36,540		3,104	33,436	8%	8%	708	2%
	UNEMPLOYMENT BENEFITS	4900								
	WORKMAN'S COMPENSATION	4910	980			980	8%	0%	(980)	-100%
---			---	---	---	---	---	---	---	---
7,821	**EMPLOYEE BENEFITS**		**99,860**		**7,821**	**92,039**	**8%**	**8%**	**(6,008)**	**-6%**
---			---	---	---	---	---	---	---	---
29,705	**PERSONAL SERVICES**		**384,354**		**29,705**	**354,649**	**8%**	**8%**	**(27,894)**	**-7%**
	OFFICE SUPPLIES									
	PAPER	5003	600			600	8%	0%	(600)	-100%
	PRINTED FORMS	5005								
	OTHER EXPENDABLE OFF.S	5010	2,000			2,000	8%	0%	(2,000)	-100%
	MINOR OFFICE EQUIP/FUR	5020	800			800	8%	0%	(800)	-100%
	SUBSCRIPTIONS,MAGS,MAP	5050								
	BOOKS	5070								
2,674	COMPUTER SUPPLIES	5080	40,000	2,430	2,674	34,896	8%	7%	(7,912)	-20%
	COMPUTR SUP-PURCHASE C	5081								
---			---	---	---	---	---	---	---	---
2,674	**OFFICE SUPPLIES**		**43,400**	**2,430**	**2,674**	**38,296**	**8%**	**6%**	**(11,312)**	**-26%**
	OPERATING SUPPLIES									
	GAS AND OIL	5250	800			800	8%	0%	(800)	-100%
	UNIFORMS, BADGES, ETC.	5350								
	MINOR EQUIPMENT	5460								
	OTHER OPERATING MATL/S	5590								
---			---	---	---	---	---	---	---	---

CITY OF HATTIESBURG
001091 - GENERAL FUND-INFO TECHNOLOGY
EXPENDITURE REPORT
1 Months Ending 10/31/12

THIS MONTH ACTUAL		OBJ/SUB	ANNUAL BUDGET	OPEN PO & CONTRACTS	YTD ACTUAL	REMAINING BALANCE	PERCENT PLAN	PERCENT ACTUAL	....PROJECTED.... OVER/UNDER	%
	OPERATING SUPPLIES		**800**			**800**	**8%**	**0%**	**(800)**	**-100%**
	REPAIR & MAINTENANCE SP									
	BUILDING MATERIALS & S	5600								
	MTR VEHICLE REP. PTS/S	5700	750			750	8%	0%	(750)	-100%
	MINOR COMPUTER EQUIP.	5800	2,000			2,000	8%	0%	(2,000)	-100%
---			---	---	---	---	---	---	---	---
	REPAIR & MAINTENANCE		**2,750**			**2,750**	**8%**	**0%**	**(2,750)**	**-100%**
---			---	---	---	---	---	---	---	---
2,674	**SUPPLIES AND EXPENSES**		**46,950**	**2,430**	**2,674**	**41,846**	**8%**	**6%**	**(14,862)**	**-32%**
	_____									
	PROFESSIONAL SERVICES									
4,254	DATA PROCESSING	6035	30,000		4,254	25,747	8%	14%	21,048	70%
	OTHER PROFESSIONAL SER	6049	5,000			5,000	8%	0%	(5,000)	-100%
---			---	---	---	---	---	---	---	---
4,254	**PROFESSIONAL SERVICE**		**35,000**		**4,254**	**30,747**	**8%**	**12%**	**16,048**	**46%**
	COMMUNICATIONS									
331	TELEPHONE AND TELEGRAP	6060	3,600		331	3,269	8%	9%	372	10%
7,164	NETWORK	6068	185,000		7,164	177,836	8%	4%	(99,032)	-54%
124	NETWORK WIRELESS	6069	4,000		124	3,876	8%	3%	(2,512)	-63%
	POSTAGE	6070								
---			---	---	---	---	---	---	---	---
7,620	**COMMUNICATIONS**		**192,600**		**7,620**	**184,980**	**8%**	**4%**	**(101,160)**	**-53%**
	TRANSPORTATION									
	TRAVEL EXPENSE	6110								
	FREIGHT	6120	300			300	8%	0%	(300)	-100%
	MESSENGER/EXPRESS SERV	6130	100			100	8%	0%	(100)	-100%
---			---	---	---	---	---	---	---	---
	TRANSPORTATION		**400**			**400**	**8%**	**0%**	**(400)**	**-100%**
	ADVERTISING									
	ADVERTISING	6150								
---			---	---	---	---	---	---	---	---
	ADVERTISING									
	PRINTING AND BINDING									
	PRINTING	6200								
	BINDING	6205								
---			---	---	---	---	---	---	---	---
	PRINTING AND BINDING									

CITY OF HATTIESBURG
001091 - GENERAL FUND-INFO TECHNOLOGY
EXPENDITURE REPORT
1 Months Ending 10/31/12

THIS MONTH ACTUAL		OBJ/SUB	ANNUAL BUDGET	OPEN PO & CONTRACTS	YTD ACTUAL	REMAINING BALANCE	PERCENT PLAN	PERCENT ACTUAL	....PROJECTED.... OVER/UNDER	%
	INSURANCE									
	PUBLIC LIAB/PROPERTY D	6255								
---			---	---	---	---	---	---	---	---
	INSURANCE									
	REPR/MAINT-OUTSIDE LABO									
	ELECTRICAL R&M	6355								
	OFFICE EQUIPMENT R&M	6365	43,150	4,810		38,340	8%	0%	(43,150)	-100%
	MOTOR VEHICLE EQ. R&M	6384	1,000			1,000	8%	0%	(1,000)	-100%
	TOW IN CHARGES	6398								
---			---	---	---	---	---	---	---	---
	REPR/MAINT-OUTSIDE L		**44,150**	**4,810**		**39,340**	**8%**	**0%**	**(44,150)**	**-100%**
	RENTALS									
	OFFICE EQUIPMENT RENT	6410								
	OTHER RENT	6449								
---			---	---	---	---	---	---	---	---
	RENTALS									
	OTHER SERVICES & CHARGE									
	DUES AND MEMBERSHIPS	6840								
	REGISTRATION FEE/TUITI	6845								
	SERVICES NOT SPECIFIED	6999								
---			---	---	---	---	---	---	---	---
	OTHER SERVICES & CHA									
---			---	---	---	---	---	---	---	---
11,873	**OTHER SERVICES & CHAR**		**272,150**	**4,810**	**11,873**	**255,467**	**8%**	**4%**	**(129,674)**	**-48%**
	_____									
	MACHINERY AND EQUIPMENT									
	OFFICE FURN/EQUIP.	7325								
30,460	DATA PROCESSING EQUIP.	7327	80,000	48,549	30,460	991	8%	38%	285,520	357%
	FINANCIAL SOFTWARE	7328								
	DOM PREP GRANT 06HS205	7332								
	PUBLIC SAFETY SOFTWARE	7333	165,000			165,000	8%	0%	(165,000)	-100%
	COMMUNICATION EQUIPMEN	7355								
	OTHER EQUIPMENT	7399								
---			---	---	---	---	---	---	---	---
30,460	**MACHINERY AND EQUIPM**		**245,000**	**48,549**	**30,460**	**165,991**	**8%**	**12%**	**120,520**	**49%**
	VEHICLES									
	AUTOMOBILES	7400								

			CITY OF HATTIESBURG							
	001091 - GENERAL FUND-INFO TECHNOLOGY		EXPENDITURE REPORT							
			1 Months Ending 10/31/12							
THIS MONTH			ANNUAL	OPEN PO	YTD	REMAINING	PERCENT		....PROJECTED....	
ACTUAL		OBJ/SUB	BUDGET	& CONTRACTS	ACTUAL	BALANCE	PLAN	ACTUAL	OVER/UNDER	%
---			---	---	---	---	---	---	---	---
	VEHICLES									
---			---	---	---	---	---	---	---	---
30,460	**CAPITAL OUTLAY**		**245,000**	**48,549**	**30,460**	**165,991**	**8%**	**12%**	**120,520**	**49%**
---			---	---	---	---	---	---	---	---
74,712	**EXPENDITURES**		**948,454**	**55,789**	**74,712**	**817,953**	**8%**	**8%**	**(51,910)**	**-5%**

			CITY OF HATTIESBURG							
	001092 - GENERAL FUND-GEN.GOVT.BLDG		EXPENDITURE REPORT							
			1 Months Ending 10/31/12							
THIS MONTH			ANNUAL	OPEN PO	YTD	REMAINING	PERCENT		....PROJECTED....	
ACTUAL		OBJ/SUB	BUDGET	& CONTRACTS	ACTUAL	BALANCE	PLAN	ACTUAL	OVER/UNDER	%
	_____									
	_____									
	SALARIES									
	REGULAR WAGES	4000								
	OVERTIME	4300								
---			---	---	---	---	---	---	---	---
	SALARIES									
	EMPLOYEE BENEFITS									
	STATE RETIREMENT	4600								
	F.I.C.A. TAXES	4700								
	HOSPITALIZATION INS.	4800								
	UNEMPLOYMENT BENEFITS	4900								
	WORKMAN'S COMPENSATION	4910								
---			---	---	---	---	---	---	---	---
	EMPLOYEE BENEFITS									
---			---	---	---	---	---	---	---	---
	PERSONAL SERVICES									
	_____									
	OFFICE SUPPLIES									
	PAPER	5003								
	PRINTED FORMS	5005								
	OTHER EXPENDABLE OFF.S	5010	238			238	8%	0%	(238)	-100%
---			---	---	---	---	---	---	---	---
	OFFICE SUPPLIES		**238**			**238**	**8%**	**0%**	**(238)**	**-100%**
	OPERATING SUPPLIES									
	CLEANING/JANITORIAL SP	5100	3,000			3,000	8%	0%	(3,000)	-100%
	HOUSEHOLD SUPPLIES	5110								
	FOOD	5115								
	MEDICAL SUPPLIES	5120								
	CHEMICALS	5130	2,280			2,280	8%	0%	(2,280)	-100%
	DIESEL FUEL	5257								
488	HORT./LANDSCAPING SPLY	5440	1,500		488	1,013	8%	33%	4,356	290%
	HAND TOOLS	5450	47			47	8%	0%	(47)	-100%
60	MINOR EQUIPMENT	5460	2,350		60	2,290	8%	3%	(1,630)	-69%
	OTHER OPERATING MATL/S	5590	8,500	99		8,401	8%	0%	(8,500)	-100%
---			---	---	---	---	---	---	---	---
548	**OPERATING SUPPLIES**		**17,677**	**99**	**548**	**17,031**	**8%**	**3%**	**(11,101)**	**-63%**

			CITY OF HATTIESBURG							
	001092 - GENERAL FUND-GEN.GOVT.BLDG		EXPENDITURE REPORT							
			1 Months Ending 10/31/12							
THIS MONTH			ANNUAL	OPEN PO	YTD	REMAINING	PERCENT		....PROJECTED....	
ACTUAL		OBJ/SUB	BUDGET	& CONTRACTS	ACTUAL	BALANCE	PLAN	ACTUAL	OVER/UNDER	%
	REPAIR & MAINTENANCE SP									
	BUILDING MATERIALS & S	5600	1,900			1,900	8%	0%	(1,900)	-100%
37	ELECTRICAL SUPPLIES	5605	3,800		37	3,763	8%	1%	(3,356)	-88%
247	PLUMBING SUPPLIES	5610	1,425		247	1,178	8%	17%	1,539	108%
	PAINT AND PAINTING SPL	5650	1,900			1,900	8%	0%	(1,900)	-100%
	OTHER REPAIR/MAINT. SP	5990	95			95	8%	0%	(95)	-100%
---			---	---	---	---	---	---	---	---
284	**REPAIR & MAINTENANCE**		**9,120**		**284**	**8,836**	**8%**	**3%**	**(5,712)**	**-63%**
---			---	---	---	---	---	---	---	---
831	**SUPPLIES AND EXPENSES**		**27,035**	**99**	**831**	**26,105**	**8%**	**3%**	**(17,063)**	**-63%**
	PROFESSIONAL SERVICES									
	BUILDING SECURITY	6021	4,000			4,000	8%	0%	(4,000)	-100%
	OTHER PROFESSIONAL SER	6049	32,300			32,300	8%	0%	(32,300)	-100%
---			---	---	---	---	---	---	---	---
	PROFESSIONAL SERVICE		**36,300**			**36,300**	**8%**	**0%**	**(36,300)**	**-100%**
	COMMUNICATIONS									
	TELEPHONE AND TELEGRAP	6060								
	TELEPHONE-EATON SCHOOL	6060 GRANT								
---			---	---	---	---	---	---	---	---
	COMMUNICATIONS									
	TRANSPORTATION									
	FREIGHT	6120								
	MESSENGER/EXPRESS SERV	6130								
---			---	---	---	---	---	---	---	---
	TRANSPORTATION									
	INSURANCE									
	PUBLIC LIAB/PROPERTY D	6255								
	BOILER MACHINERY	6260								
---			---	---	---	---	---	---	---	---
	INSURANCE									
	UTILITIES									
26	GAS	6300	5,000		26	4,974	8%	1%	(4,688)	-94%
	GAS-TRAIN DEPOT	6300 DEPOT								
	GAS-EATON SCHOOL	6300 GRANT								
3,627	ELECTRICITY	6305	50,000		3,627	46,373	8%	7%	(6,476)	-13%
	ELECTRICITY-TRAIN DEPO	6305 DEPOT								

			CITY OF HATTIESBURG							
	001092 - GENERAL FUND-GEN.GOVT.BLDG		EXPENDITURE REPORT							
			1 Months Ending 10/31/12							
THIS MONTH			ANNUAL	OPEN PO	YTD	REMAINING	PERCENT		....PROJECTED....	
ACTUAL		OBJ/SUB	BUDGET	& CONTRACTS	ACTUAL	BALANCE	PLAN	ACTUAL	OVER/UNDER	%
	ELECTRICITY-EATON SCHO	6305 GRANT								
---			---	---	---	---	---	---	---	---
3,653	**UTILITIES**		**55,000**		**3,653**	**51,347**	**8%**	**7%**	**(11,164)**	**-20%**
	REPR/MAINT-OUTSIDE LABO									
	BUILDING R&M	6350	8,963	1,400		7,563	8%	0%	(8,963)	-100%
	ELECTRICAL R&M	6355	1,520			1,520	8%	0%	(1,520)	-100%
	PLUMBING EQUIPMENT R&M	6357	475			475	8%	0%	(475)	-100%
	HOUSEHOLD EQUIPMENT R&	6370	1,600			1,600	8%	0%	(1,600)	-100%
	FIXED EQUIPMENT R&M	6380	15,900			15,900	8%	0%	(15,900)	-100%
	MINOR EQUIPMENT R&M	6382								
	CLEANING AND PAINTING	6392	3,705			3,705	8%	0%	(3,705)	-100%
	EXTERMINATION-DEPOT	6393								
	DISINFECT./EXTERMINATI	6394	800			800	8%	0%	(800)	-100%
	OTHER REPAIRS AND MAIN	6399	570			570	8%	0%	(570)	-100%
---			---	---	---	---	---	---	---	---
	REPR/MAINT-OUTSIDE L		**33,533**	**1,400**		**32,133**	**8%**	**0%**	**(33,533)**	**-100%**
	RENTALS									
	MOP-MAT-RAG RENT	6435								
	OTHER RENT	6449								
---			---	---	---	---	---	---	---	---
	RENTALS									
	OTHER SERVICES & CHARGE									
	CUSTODIAL SERVICE	6870								
---			---	---	---	---	---	---	---	---
	OTHER SERVICES & CHA									
---			---	---	---	---	---	---	---	---
3,653	**OTHER SERVICES & CHAR**		**124,833**	**1,400**	**3,653**	**119,780**	**8%**	**3%**	**(80,997)**	**-65%**
	_____									
	BUILDING/BLD IMPROVEMEN									
	BUILDINGS	7100								
	FIRST BAPTIST CHURCH	7100 13								
---			---	---	---	---	---	---	---	---
	BUILDINGS									
---			---	---	---	---	---	---	---	---
	BUILDING/BLD IMPROVE									
	IMPROVEMENT OTHER THAN									
	LANDSCAPING	7250								

			CITY OF HATTIESBURG							
	001092 - GENERAL FUND-GEN.GOVT.BLDG		EXPENDITURE REPORT							
			1 Months Ending 10/31/12							
THIS MONTH			ANNUAL	OPEN PO	YTD	REMAINING	PERCENT		....PROJECTED....	
ACTUAL		OBJ/SUB	BUDGET	& CONTRACTS	ACTUAL	BALANCE	PLAN	ACTUAL	OVER/UNDER	%
	OTHER IMPROVEMENTS	7295								
---			---	---	---	---	---	---	---	---
	IMPROVEMENT OTHER TH									
	MACHINERY AND EQUIPMENT									
	HOUSEHOLD FURN/EQUIP.	7320								
	OTHER EQUIPMENT	7399								
---			---	---	---	---	---	---	---	---
	MACHINERY AND EQUIPM									
---			---	---	---	---	---	---	---	---
	CAPITAL OUTLAY									
---			---	---	---	---	---	---	---	---
4,485	**EXPENDITURES**		**151,868**	**1,499**	**4,485**	**145,885**	**8%**	**3%**	**(98,048)**	**-65%**

			CITY OF HATTIESBURG							
	001093 - GENERAL FD-INTERMODALFAC O&M		EXPENDITURE REPORT							
			1 Months Ending 10/31/12							
THIS MONTH			ANNUAL	OPEN PO	YTD	REMAINING	PERCENT		....PROJECTED....	
ACTUAL		OBJ/SUB	BUDGET	& CONTRACTS	ACTUAL	BALANCE	PLAN	ACTUAL	OVER/UNDER	%
	SALARIES									
	REGULAR WAGES	4000								
	OVERTIME	4300								
	SALARIES									
	EMPLOYEE BENEFITS									
	STATE RETIREMENT	4600								
	F.I.C.A. TAXES	4700								
	HOSPITALIZATION INS.	4800								
	UNEMPLOYMENT BENEFITS	4900								
	WORKMAN'S COMPENSATION	4910								
	EMPLOYEE BENEFITS									
	PERSONAL SERVICES									
	OFFICE SUPPLIES									
	PAPER	5003								
	PRINTED FORMS	5005								
	OTHER EXPENDABLE OFF.S	5010								
	MINOR OFFICE EQUIP/FUR	5020								
	SUBSCRIPTIONS,MAGS,MAP	5050								
	BOOKS	5070								
	COMPUTER SUPPLIES	5080								
	OFFICE SUPPLIES									
	OPERATING SUPPLIES									
422	CLEANING/JANITORIAL SP	5100	2,000	713	422	865	8%	21%	3,064	153%
	GAS AND OIL	5250								
	LUBRICANTS	5255								
	HORT./LANDSCAPING SPLY	5440	1,000			1,000	8%	0%	(1,000)	-100%
	MINOR EQUIPMENT	5460	2,500			2,500	8%	0%	(2,500)	-100%
	OTHER OPERATING MATL/S	5590	1,000			1,000	8%	0%	(1,000)	-100%
422	**OPERATING SUPPLIES**		**6,500**	**713**	**422**	**5,365**	**8%**	**6%**	**(1,436)**	**-22%**

CITY OF HATTIESBURG
001093 - GENERAL FD-INTERMODALFAC O&M
EXPENDITURE REPORT
1 Months Ending 10/31/12

THIS MONTH ACTUAL		OBJ/SUB	ANNUAL BUDGET	OPEN PO & CONTRACTS	YTD ACTUAL	REMAINING BALANCE	PERCENT PLAN	PERCENT ACTUAL	....PROJECTED.... OVER/UNDER	%
	REPAIR & MAINTENANCE SP									
	BUILDING MATERIALS & S	5600	500			500	8%	0%	(500)	-100%
215	ELECTRICAL SUPPLIES	5605	3,500		215	3,285	8%	6%	(920)	-26%
	PLUMBING SUPPLIES	5610	1,500			1,500	8%	0%	(1,500)	-100%
	PAINT AND PAINTING SPL	5650								
	MTR VEHICLE REP. PTS/S	5700								
	AGRICLTRL REPAIR PTS/S	5755								
535	OTHER REPAIR/MAINT. SP	5990	1,500		535	965	8%	36%	4,920	328%
---			---	---	---	---	---	---	---	---
750	**REPAIR & MAINTENANCE**		**7,000**		**750**	**6,250**	**8%**	**11%**	**2,000**	**29%**
---			---	---	---	---	---	---	---	---
1,172	**SUPPLIES AND EXPENSES**		**13,500**	**713**	**1,172**	**11,615**	**8%**	**9%**	**564**	**4%**
	_____									
	PROFESSIONAL SERVICES									
	BUILDING SECURITY	6021								
	OTHER PROFESSIONAL SER	6049								
---			---	---	---	---	---	---	---	---
	PROFESSIONAL SERVICE									
	COMMUNICATIONS									
	TELEPHONE AND TELEGRAP	6060								
	POSTAGE	6070								
---			---	---	---	---	---	---	---	---
	COMMUNICATIONS									
	TRANSPORTATION									
	TRAVEL EXPENSE	6110								
	FREIGHT	6120								
	MESSENGER/EXPRESS SERV	6130								
---			---	---	---	---	---	---	---	---
	TRANSPORTATION									
	ADVERTISING									
	ADVERTISING	6150								
---			---	---	---	---	---	---	---	---
	ADVERTISING									
	PRINTING AND BINDING									
	PRINTING	6200								
---			---	---	---	---	---	---	---	---
	PRINTING AND BINDING									

CITY OF HATTIESBURG
001093 - GENERAL FD-INTERMODALFAC O&M
EXPENDITURE REPORT
1 Months Ending 10/31/12

THIS MONTH ACTUAL		OBJ/SUB	ANNUAL BUDGET	OPEN PO & CONTRACTS	YTD ACTUAL	REMAINING BALANCE	PERCENT PLAN	PERCENT ACTUAL	....PROJECTED.... OVER/UNDER	%
	INSURANCE									
	AUTOMOBILE INSURANCE	6265								
	SURETY AND FORGERY BON	6270								
---			---	---	---	---	---	---	---	---
	INSURANCE									
	UTILITIES									
	GAS	6300								
2,283	ELECTRICITY	6305	42,000		2,283	39,717	8%	5%	(14,604)	-35%
---			---	---	---	---	---	---	---	---
2,283	**UTILITIES**		**42,000**		**2,283**	**39,717**	**8%**	**5%**	**(14,604)**	**-35%**
	REPR/MAINT-OUTSIDE LABO									
	BUILDING R&M	6350	68,000			68,000	8%	0%	(68,000)	-100%
	ELECTRICAL R&M	6355	2,140			2,140	8%	0%	(2,140)	-100%
	PLUMBING EQUIPMENT R&M	6357	2,000			2,000	8%	0%	(2,000)	-100%
	OFFICE EQUIPMENT R&M	6365	1,500			1,500	8%	0%	(1,500)	-100%
	MOTOR VEHICLE EQ. R&M	6384								
	DISINFECT./EXTERMINATI	6394	2,700			2,700	8%	0%	(2,700)	-100%
	SIGN PAINTING	6396								
	OTHER REPAIRS AND MAIN	6399	6,000			6,000	8%	0%	(6,000)	-100%
---			---	---	---	---	---	---	---	---
	REPR/MAINT-OUTSIDE L		**82,340**			**82,340**	**8%**	**0%**	**(82,340)**	**-100%**
	RENTALS									
	UNIFORM RENT	6430								
	OTHER RENT	6449								
---			---	---	---	---	---	---	---	---
	RENTALS									
	OTHER SERVICES & CHARGE									
	EXHIBITIONS & PROMOTIO	6500								
	DUES AND MEMBERSHIPS	6840								
	REGISTRATION FEE/TUITI	6845								
	CUSTODIAL SERVICE	6870								
	SERVICES NOT SPECIFIED	6999								
---			---	---	---	---	---	---	---	---
	OTHER SERVICES & CHA									
---			---	---	---	---	---	---	---	---
2,283	**OTHER SERVICES & CHAR**		**124,340**		**2,283**	**122,057**	**8%**	**2%**	**(96,944)**	**-78%**

			CITY OF HATTIESBURG							
	001093 - GENERAL FD-INTERMODALFAC O&M		EXPENDITURE REPORT							
			1 Months Ending 10/31/12							
THIS MONTH			ANNUAL	OPEN PO	YTD	REMAINING	PERCENT		....PROJECTED....	
ACTUAL		OBJ/SUB	BUDGET	& CONTRACTS	ACTUAL	BALANCE	PLAN	ACTUAL	OVER/UNDER	%
	MACHINERY AND EQUIPMENT									
	OFFICE FURN/EQUIP.	7325								
	DATA PROCESSING EQUIP.	7327								
---			---	---	---	---	---	---	---	---
	MACHINERY AND EQUIPM									
---			---	---	---	---	---	---	---	---
	CAPITAL OUTLAY									
---			---	---	---	---	---	---	---	---
3,455	**EXPENDITURES**		**137,840**	**713**	**3,455**	**133,672**	**8%**	**3%**	**(96,380)**	**-70%**

CITY OF HATTIESBURG
001094 - GENERAL FUND-METRPLTNPLANG.
EXPENDITURE REPORT
1 Months Ending 10/31/12

THIS MONTH ACTUAL		OBJ/SUB	ANNUAL BUDGET	OPEN PO & CONTRACTS	YTD ACTUAL	REMAINING BALANCE	PERCENT PLAN	PERCENT ACTUAL	....PROJECTED.... OVER/UNDER	%
	SALARIES									
11,678	REGULAR WAGES	4000	154,196		11,678	142,518	8%	8%	(14,060)	-9%
	DISASTER RECOVERY WAGE	4010								
	OVERTIME	4300								
	DISASTER RECOVERY OVER	4310								
11,678	**SALARIES**		**154,196**		**11,678**	**142,518**	**8%**	**8%**	**(14,060)**	**-9%**
	EMPLOYEE BENEFITS									
1,585	STATE RETIREMENT	4600	22,000		1,585	20,415	8%	7%	(2,980)	-14%
876	F.I.C.A. TAXES	4700	11,800		876	10,924	8%	7%	(1,288)	-11%
1,552	HOSPITALIZATION INS.	4800	20,880		1,552	19,328	8%	7%	(2,256)	-11%
	UNEMPLOYMENT BENEFITS	4900								
	WORKMAN'S COMPENSATION	4910	535			535	8%	0%	(535)	-100%
4,013	**EMPLOYEE BENEFITS**		**55,215**		**4,013**	**51,202**	**8%**	**7%**	**(7,059)**	**-13%**
15,692	**PERSONAL SERVICES**		**209,411**		**15,692**	**193,719**	**8%**	**7%**	**(21,107)**	**-10%**
	OFFICE SUPPLIES									
	PAPER	5003	1,000			1,000	8%	0%	(1,000)	-100%
	PRINTED FORMS	5005								
251	OTHER EXPENDABLE OFF.S	5010	1,500	692	251	557	8%	17%	1,512	101%
	MINOR OFFICE EQUIP/FUR	5020								
	PHOTO SUPPLIES	5040								
	SUBSCRIPTIONS,MAGS,MAP	5050								
	BOOKS	5070								
	COMPUTER SUPPLIES	5080	3,000			3,000	8%	0%	(3,000)	-100%
251	**OFFICE SUPPLIES**		**5,500**	**692**	**251**	**4,557**	**8%**	**5%**	**(2,488)**	**-45%**
	OPERATING SUPPLIES									
60	FOOD	5115	500		60	440	8%	12%	220	44%
	MINOR EQUIPMENT	5460	300			300	8%	0%	(300)	-100%
60	**OPERATING SUPPLIES**		**800**		**60**	**740**	**8%**	**8%**	**(80)**	**-10%**

			CITY OF HATTIESBURG							
	001094 - GENERAL FUND-METRPLTNPLANG.		EXPENDITURE REPORT							
			1 Months Ending 10/31/12							
THIS MONTH			ANNUAL	OPEN PO	YTD	REMAINING	PERCENT		....PROJECTED....	
ACTUAL		OBJ/SUB	BUDGET	& CONTRACTS	ACTUAL	BALANCE	PLAN	ACTUAL	OVER/UNDER	%
311	**SUPPLIES AND EXPENSES**		**6,300**	**692**	**311**	**5,297**	**8%**	**5%**	**(2,568)**	**-41%**
	PROFESSIONAL SERVICES									
	ENGINEERING	6015								
	CONSULTANT SERV/SURVEY	6020								
	ABSTRACTING & RECORDIN	6023								
	LEGAL	6025								
	OTHER PROFESSIONAL SER	6049								
	PROFESSIONAL SERVICE									
	COMMUNICATIONS									
	TELEPHONE AND TELEGRAP	6060								
	POSTAGE	6070								
	COMMUNICATIONS									
	TRANSPORTATION									
	TRAVEL EXPENSE	6110	5,000			5,000	8%	0%	(5,000)	-100%
	FREIGHT	6120								
	MESSENGER/EXPRESS SERV	6130	100			100	8%	0%	(100)	-100%
	TRANSPORTATION		**5,100**			**5,100**	**8%**	**0%**	**(5,100)**	**-100%**
	ADVERTISING									
	ADVERTISING	6150								
	ADVERTISING									
	PRINTING AND BINDING									
	PRINTING	6200								
	BLUELINES	6210								
	FILM PROCESSING	6240								
	PRINTING AND BINDING									
	REPR/MAINT-OUTSIDE LABO									
15	OFFICE EQUIPMENT R&M	6365	792	792	15	(15)	8%	2%	(612)	-77%
15	**REPR/MAINT-OUTSIDE L**		**792**	**792**	**15**	**(15)**	**8%**	**2%**	**(612)**	**-77%**
	OTHER SERVICES & CHARGE									
	DUES AND MEMBERSHIPS	6840	208			208	8%	0%	(208)	-100%

			CITY OF HATTIESBURG							
	001094 - GENERAL FUND-METRPLTNPLANG.		EXPENDITURE REPORT							
			1 Months Ending 10/31/12							
THIS MONTH			ANNUAL	OPEN PO	YTD	REMAINING	PERCENT		....PROJECTED....	
ACTUAL		OBJ/SUB	BUDGET	& CONTRACTS	ACTUAL	BALANCE	PLAN	ACTUAL	OVER/UNDER	%
	REGISTRATION FEE/TUITI	6845	500			500	8%	0%	(500)	-100%
	SERVICES NOT SPECIFIED	6999								
---			---	---	---	---	---	---	---	---
	OTHER SERVICES & CHA		**708**			**708**	**8%**	**0%**	**(708)**	**-100%**
---			---	---	---	---	---	---	---	---
15	**OTHER SERVICES & CHAR**		**6,600**	**792**	**15**	**5,793**	**8%**	**0%**	**(6,420)**	**-97%**
	MACHINERY AND EQUIPMENT									
	OFFICE FURN/EQUIP.	7325								
	DATA PROCESSING EQUIP.	7327	500			500	8%	0%	(500)	-100%
---			---	---	---	---	---	---	---	---
	MACHINERY AND EQUIPM		**500**			**500**	**8%**	**0%**	**(500)**	**-100%**
	VEHICLES									
	AUTOMOBILES	7400								
---			---	---	---	---	---	---	---	---
	VEHICLES									
---			---	---	---	---	---	---	---	---
	CAPITAL OUTLAY		**500**			**500**	**8%**	**0%**	**(500)**	**-100%**
---			---	---	---	---	---	---	---	---
16,017	**EXPENDITURES**		**222,811**	**1,484**	**16,017**	**205,310**	**8%**	**7%**	**(30,607)**	**-14%**

CITY OF HATTIESBURG
001095 - GENERAL FUND-G/G INS.OTH SER
EXPENDITURE REPORT
1 Months Ending 10/31/12

THIS MONTH ACTUAL		OBJ/SUB	ANNUAL BUDGET	OPEN PO & CONTRACTS	YTD ACTUAL	REMAINING BALANCE	PERCENT PLAN	PERCENT ACTUAL	....PROJECTED.... OVER/UNDER	%
	SALARIES									
	REGULAR WAGES	4000								
101	OVERTIME	4300	2,500		101	2,399	8%	4%	(1,288)	-52%
---			---	---	---	---	---	---	---	---
101	**SALARIES**		**2,500**		**101**	**2,399**	**8%**	**4%**	**(1,288)**	**-52%**
	EMPLOYEE BENEFITS									
14	STATE RETIREMENT	4600	360		14	346	8%	4%	(192)	-53%
7	F.I.C.A. TAXES	4700	191		7	184	8%	4%	(107)	-56%
29	HOSPITALIZATION INS.	4800	120		29	91	8%	24%	228	190%
	UNEMPLOYMENT BENEFITS	4900								
	WORKMAN'S COMPENSATION	4910								
---			---	---	---	---	---	---	---	---
51	**EMPLOYEE BENEFITS**		**671**		**51**	**620**	**8%**	**8%**	**(59)**	**-9%**
---			---	---	---	---	---	---	---	---
152	**PERSONAL SERVICES**		**3,171**		**152**	**3,019**	**8%**	**5%**	**(1,347)**	**-42%**
	OFFICE SUPPLIES									
	PAPER	5003	1,000			1,000	8%	0%	(1,000)	-100%
	PRINTED FORMS	5005								
---			---	---	---	---	---	---	---	---
	OFFICE SUPPLIES		**1,000**			**1,000**	**8%**	**0%**	**(1,000)**	**-100%**
	OPERATING SUPPLIES									
	FOOD	5115								
	DIESEL FUEL	5257								
	WEARING APPAREL	5355								
	OTHER OPERATING MATL/S	5590	200			200	8%	0%	(200)	-100%
	UNALLOC. PETROLEUM PRO	5599								
---			---	---	---	---	---	---	---	---
	OPERATING SUPPLIES		**200**			**200**	**8%**	**0%**	**(200)**	**-100%**
	REPAIR & MAINTENANCE SP									
	OTHER REPAIR/MAINT. SP	5990								
---			---	---	---	---	---	---	---	---
	REPAIR & MAINTENANCE									
---			---	---	---	---	---	---	---	---
	SUPPLIES AND EXPENSES		**1,200**			**1,200**	**8%**	**0%**	**(1,200)**	**-100%**

			CITY OF HATTIESBURG							
	001095 - GENERAL FUND-G/G INS.OTH SER		EXPENDITURE REPORT							
			1 Months Ending 10/31/12							
THIS MONTH			ANNUAL	OPEN PO	YTD	REMAINING	PERCENT		....PROJECTED....	
ACTUAL		OBJ/SUB	BUDGET	& CONTRACTS	ACTUAL	BALANCE	PLAN	ACTUAL	OVER/UNDER	%
	PROFESSIONAL SERVICES									
	AUDITING AND ACCOUNTIN	6010								
	TITLE OPINIONS	6016								
	APPRAISAL	6017								
	CONSULTANT SERV/SURVEY	6020								
12,000	CONSULTANT-TWIN FORKS	6020 01	140,000		12,000	128,000	8%	9%	4,000	3%
	CONSULTANT-GORDONS CRK	6020 05	32,568			32,568	8%	0%	(32,568)	-100%
1,666	LEGAL	6025	60,000		1,666	58,334	8%	3%	(40,008)	-67%
	CAFE PLAN-ADMIN.COSTS	6026	4,500			4,500	8%	0%	(4,500)	-100%
3,090	MEDICAL	6027	37,500	3,570	3,090	30,840	8%	8%	(420)	-1%
	UNALLOC.WELLNESS/HOSP.	6028	200			200	8%	0%	(200)	-100%
	IN-SERVICE TRAINING	6029	1,500			1,500	8%	0%	(1,500)	-100%
	ENTERTAINMENT	6033								
	DATA PROCESSING	6035								
	EMER.SHELTER/MDA GRANT	6040	75,000			75,000	8%	0%	(75,000)	-100%
	I.P.-HYBERPLASTIC/MDA	6041								
	COPS-SECURE SCHLS/OJP	6042								
	VISITORS' CTR/MDOT GRA	6046								
6,971	OTHER PROFESSIONAL SER	6049	175,000		6,971	168,029	8%	4%	(91,348)	-52%
---			---	---	---	---	---	---	---	---
23,727	**PROFESSIONAL SERVICE**		**526,268**	**3,570**	**23,727**	**498,971**	**8%**	**5%**	**(241,544)**	**-46%**
	COMMUNICATIONS									
	TELEPHONE AND TELEGRAP	6060	100,000	2,664		97,336	8%	0%	(100,000)	-100%
	TELEPHONE RENT	6065								
	POSTAGE	6070	51,500			51,500	8%	0%	(51,500)	-100%
---			---	---	---	---	---	---	---	---
	COMMUNICATIONS		**151,500**	**2,664**		**148,836**	**8%**	**0%**	**(151,500)**	**-100%**
	TRANSPORTATION									
1,426	TRAVEL EXPENSE	6110	8,000		1,426	6,574	8%	18%	9,112	114%
	MESSENGER/EXPRESS SERV	6130								
---			---	---	---	---	---	---	---	---
1,426	**TRANSPORTATION**		**8,000**		**1,426**	**6,574**	**8%**	**18%**	**9,112**	**114%**
	ADVERTISING									
	UNALLOCATED ADVERTISIN	6155	17,600			17,600	8%	0%	(17,600)	-100%
---			---	---	---	---	---	---	---	---
	ADVERTISING		**17,600**			**17,600**	**8%**	**0%**	**(17,600)**	**-100%**

			CITY OF HATTIESBURG							
	001095 - GENERAL FUND-G/G INS.OTH SER		EXPENDITURE REPORT							
			1 Months Ending 10/31/12							
THIS MONTH			ANNUAL	OPEN PO	YTD	REMAINING	PERCENT		....PROJECTED....	
ACTUAL		OBJ/SUB	BUDGET	& CONTRACTS	ACTUAL	BALANCE	PLAN	ACTUAL	OVER/UNDER	%
	PRINTING AND BINDING									
	PRINTING	6200	3,000			3,000	8%	0%	(3,000)	-100%
	BINDING	6205								
---			---	---	---	---	---	---	---	---
	PRINTING AND BINDING		**3,000**			**3,000**	**8%**	**0%**	**(3,000)**	**-100%**
	INSURANCE									
	FIRE & EXTENDED COVERA	6250	166,000			166,000	8%	0%	(166,000)	-100%
	PUBLIC LIAB/PROPERTY D	6255	550,000			550,000	8%	0%	(550,000)	-100%
	BOILER MACHINERY	6260								
375	SURETY AND FORGERY BON	6270	500		375	125	8%	75%	4,000	800%
	OTHER INSURANCE	6299	2,200			2,200	8%	0%	(2,200)	-100%
---			---	---	---	---	---	---	---	---
375	**INSURANCE**		**718,700**		**375**	**718,325**	**8%**	**0%**	**(714,200)**	**-99%**
	REPR/MAINT-OUTSIDE LABO									
	OFFICE EQUIPMENT R&M	6365								
	MOTOR VEHICLE EQ. R&M	6384								
	COMMUNICATION EQ. R&M	6390								
	OTHER REPAIRS AND MAIN	6399	600			600	8%	0%	(600)	-100%
	OTHER REPAIRS AND MAIN	6399 FBC								
---			---	---	---	---	---	---	---	---
	REPR/MAINT-OUTSIDE L		**600**			**600**	**8%**	**0%**	**(600)**	**-100%**
	OTHER SERVICES & CHARGE									
	SETTLEMT OF DAMAGE CLA	6700	75,000			75,000	8%	0%	(75,000)	-100%
	LATE PAYMENT CHARGE	6705	3,200			3,200	8%	0%	(3,200)	-100%
	COURT COSTS	6710								
	THEFT LOSS	6818								
3,780	PROP.TAX COLL. FEES .0	6830	50,000		3,780	46,220	8%	8%	(4,640)	-9%
1	PROP.TAX COLL. FEES.00	6831	58,500		1	58,499	8%	0%	(58,488)	-100%
131	BANK SERV/TRF FEE	6832	2,100		131	1,969	8%	6%	(528)	-25%
14,122	DUES AND MEMBERSHIPS	6840	25,000		14,122	10,878	8%	56%	144,464	578%
504	REGISTRATION FEE/TUITI	6845	6,800		504	6,296	8%	7%	(752)	-11%
	PROPERTY TAXES	6995	1,900			1,900	8%	0%	(1,900)	-100%
3,000	LOBBYING	6998	36,000		3,000	33,000	8%	8%		0%
	SERVICES NOT SPECIFIED	6999	50,000			50,000	8%	0%	(50,000)	-100%
---			---	---	---	---	---	---	---	---
21,539	**OTHER SERVICES & CHA**		**308,500**		**21,539**	**286,961**	**8%**	**7%**	**(50,032)**	**-16%**
---			---	---	---	---	---	---	---	---

			CITY OF HATTIESBURG							
	001095 - GENERAL FUND-G/G INS.OTH SER		EXPENDITURE REPORT							
			1 Months Ending 10/31/12							
THIS MONTH			ANNUAL	OPEN PO	YTD	REMAINING	PERCENT		....PROJECTED....	
ACTUAL		OBJ/SUB	BUDGET	& CONTRACTS	ACTUAL	BALANCE	PLAN	ACTUAL	OVER/UNDER	%
47,067	**OTHER SERVICES & CHAR**		**1,734,168**	**6,234**	**47,067**	**1,680,867**	**8%**	**3%**	**(1,169,364)**	**-67%**
	MACHINERY AND EQUIPMENT									
	OFFICE FURN/EQUIP.	7325								
	DATA PROCESSING EQUIP.	7327								
	COMMUNICATION EQUIPMEN	7355								
---			---	---	---	---	---	---	---	---
	MACHINERY AND EQUIPM									
	VEHICLES									
	AUTOMOBILES	7400								
---			---	---	---	---	---	---	---	---
	VEHICLES									
---			---	---	---	---	---	---	---	---
	CAPITAL OUTLAY									
---			---	---	---	---	---	---	---	---
47,219	**EXPENDITURES**		**1,738,539**	**6,234**	**47,219**	**1,685,086**	**8%**	**3%**	**(1,171,911)**	**-67%**

			CITY OF HATTIESBURG							
	001096 - GENERAL FUND-FED PROGADMIN		EXPENDITURE REPORT							
			1 Months Ending 10/31/12							
THIS MONTH			ANNUAL	OPEN PO	YTD	REMAINING	PERCENT		....PROJECTED....	
ACTUAL		OBJ/SUB	BUDGET	& CONTRACTS	ACTUAL	BALANCE	PLAN	ACTUAL	OVER/UNDER	%
	SALARIES									
3,031	REGULAR WAGES	4000	99,409		3,031	96,378	8%	3%	(63,037)	-63%
	DISASTER RECOVERY WAGE	4010								
	OVERTIME	4300								
	DISASTER RECOVERY OVER	4310								
---			---	---	---	---	---	---	---	---
3,031	**SALARIES**		**99,409**		**3,031**	**96,378**	**8%**	**3%**	**(63,037)**	**-63%**
	EMPLOYEE BENEFITS									
432	STATE RETIREMENT	4600	14,180		432	13,748	8%	3%	(8,996)	-63%
206	F.I.C.A. TAXES	4700	7,610		206	7,404	8%	3%	(5,138)	-68%
388	HOSPITALIZATION INS.	4800	10,440		388	10,052	8%	4%	(5,784)	-55%
	UNEMPLOYMENT BENEFITS	4900								
	WORKMAN'S COMPENSATION	4910	545			545	8%	0%	(545)	-100%
---			---	---	---	---	---	---	---	---
1,026	**EMPLOYEE BENEFITS**		**32,775**		**1,026**	**31,749**	**8%**	**3%**	**(20,463)**	**-62%**
---			---	---	---	---	---	---	---	---
4,058	**PERSONAL SERVICES**		**132,184**		**4,058**	**128,126**	**8%**	**3%**	**(83,488)**	**-63%**
	OFFICE SUPPLIES									
	PAPER	5003								
	PRINTED FORMS	5005								
	OTHER EXPENDABLE OFF.S	5010	350			350	8%	0%	(350)	-100%
	MINOR OFFICE EQUIP/FUR	5020								
	MICROFILM SUPPLIES	5030								
	SUBSCRIPTIONS,MAGS,MAP	5050	500			500	8%	0%	(500)	-100%
	BOOKS	5070								
	COMPUTER SUPPLIES	5080								
---			---	---	---	---	---	---	---	---
	OFFICE SUPPLIES		**850**			**850**	**8%**	**0%**	**(850)**	**-100%**
	OPERATING SUPPLIES									
	CLEANING/JANITORIAL SP	5100								
	FOOD	5115	1,200			1,200	8%	0%	(1,200)	-100%
55	GAS AND OIL	5250	2,050		55	1,995	8%	3%	(1,390)	-68%
	MINOR EQUIPMENT	5460								
	OTHER OPERATING MATL/S	5590								

			CITY OF HATTIESBURG							
	001096 - GENERAL FUND-FED PROGADMIN		EXPENDITURE REPORT							
			1 Months Ending 10/31/12							
THIS MONTH			ANNUAL	OPEN PO	YTD	REMAINING	PERCENT		....PROJECTED....	
ACTUAL		OBJ/SUB	BUDGET	& CONTRACTS	ACTUAL	BALANCE	PLAN	ACTUAL	OVER/UNDER	%
	OTHER OPER.MATL-BROWNS	5591	4,920			4,920	8%	0%	(4,920)	-100%
---			---	---	---	---	---	---	---	---
55	**OPERATING SUPPLIES**		**8,170**		**55**	**8,115**	**8%**	**1%**	**(7,510)**	**-92%**
	REPAIR & MAINTENANCE SP									
	BUILDING MATERIALS & S	5600								
	MTR VEHICLE REP. PTS/S	5700	150			150	8%	0%	(150)	-100%
	MINOR COMPUTER EQUIP.	5800								
	OTHER REPAIR/MAINT. SP	5990								
---			---	---	---	---	---	---	---	---
	REPAIR & MAINTENANCE		**150**			**150**	**8%**	**0%**	**(150)**	**-100%**
---			---	---	---	---	---	---	---	---
55	**SUPPLIES AND EXPENSES**		**9,170**		**55**	**9,115**	**8%**	**1%**	**(8,510)**	**-93%**
	_____									
	PROFESSIONAL SERVICES									
	CONSULTANT SERV-BROWNS	6020								
	DATA PROCESSING	6035								
	MICROFILM PROCESSING	6037								
	OTHER PROFESSIONAL SER	6049								
---			---	---	---	---	---	---	---	---
	PROFESSIONAL SERVICE									
	COMMUNICATIONS									
50	TELEPHONE AND TELEGRAP	6060	750		50	700	8%	7%	(150)	-20%
76	POSTAGE	6070	100		76	24	8%	76%	812	812%
---			---	---	---	---	---	---	---	---
126	**COMMUNICATIONS**		**850**		**126**	**724**	**8%**	**15%**	**662**	**78%**
	TRANSPORTATION									
	TRAVEL EXPENSE	6110	1,000			1,000	8%	0%	(1,000)	-100%
	TRVL EXP-BROWNSFIELD P	6116	4,000			4,000	8%	0%	(4,000)	-100%
	FREIGHT	6120								
	MESSENGER/EXPRESS SERV	6130								
---			---	---	---	---	---	---	---	---
	TRANSPORTATION		**5,000**			**5,000**	**8%**	**0%**	**(5,000)**	**-100%**
	ADVERTISING									
25	ADVERTISING	6150	100		25	75	8%	25%	200	200%
---			---	---	---	---	---	---	---	---
25	**ADVERTISING**		**100**		**25**	**75**	**8%**	**25%**	**200**	**200%**
	PRINTING AND BINDING									

CITY OF HATTIESBURG
001096 - GENERAL FUND-FED PROGADMIN
EXPENDITURE REPORT
1 Months Ending 10/31/12

THIS MONTH ACTUAL		OBJ/SUB	ANNUAL BUDGET	OPEN PO & CONTRACTS	YTD ACTUAL	REMAINING BALANCE	PERCENT PLAN	PERCENT ACTUAL	....PROJECTED.... OVER/UNDER	%
	PRINTING	6200								
	BINDING	6205								
---			---	---	---	---	---	---	---	---
	PRINTING AND BINDING									
	INSURANCE									
	SURETY AND FORGERY BON	6270								
---			---	---	---	---	---	---	---	---
	INSURANCE									
	REPR/MAINT-OUTSIDE LABO									
	BUILDING R&M	6350								
	OFFICE EQUIPMENT R&M	6365								
	MOTOR VEHICLE EQ. R&M	6384	200			200	8%	0%	(200)	-100%
	OTHER REPAIRS AND MAIN	6399								
---			---	---	---	---	---	---	---	---
	REPR/MAINT-OUTSIDE L		**200**			**200**	**8%**	**0%**	**(200)**	**-100%**
	RENTALS									
	OFFICE EQUIPMENT RENT	6410								
	OTHER RENT	6449								
---			---	---	---	---	---	---	---	---
	RENTALS									
	OTHER SERVICES & CHARGE									
	DUES AND MEMBERSHIPS	6840								
	REGISTRATION FEE/TUITI	6845	250			250	8%	0%	(250)	-100%
	SERVICES NOT SPECIFIED	6999								
---			---	---	---	---	---	---	---	---
	OTHER SERVICES & CHA		**250**			**250**	**8%**	**0%**	**(250)**	**-100%**
---			---	---	---	---	---	---	---	---
151	**OTHER SERVICES & CHAR**		**6,400**		**151**	**6,249**	**8%**	**2%**	**(4,588)**	**-72%**
	_____									
	ENVIRON PROJ-BROWNSFI	7296 04								
	MACHINERY AND EQUIPMENT									
	OFFICE FURN/EQUIP.	7325								
	DATA PROCESSING EQUIP.	7327								
	OTHER EQUIPMENT	7399								
---			---	---	---	---	---	---	---	---
	MACHINERY AND EQUIPM									
---			---	---	---	---	---	---	---	---

			CITY OF HATTIESBURG							
	001096 - GENERAL FUND-FED PROGADMIN		EXPENDITURE REPORT							
			1 Months Ending 10/31/12							
THIS MONTH			ANNUAL	OPEN PO	YTD	REMAINING	PERCENT		....PROJECTED....	
ACTUAL		OBJ/SUB	BUDGET	& CONTRACTS	ACTUAL	BALANCE	PLAN	ACTUAL	OVER/UNDER	%
	CAPITAL OUTLAY									
----------			---------	---------	---------	---------	-----	-----	--------	-----
4,264	**EXPENDITURES**		**147,754**		**4,264**	**143,490**	**8%**	**3%**	**(96,586)**	**-65%**

CITY OF HATTIESBURG
001100 - GENERAL FUND-POLICE/PUB.SFTY
EXPENDITURE REPORT
1 Months Ending 10/31/12

THIS MONTH ACTUAL		OBJ/SUB	ANNUAL BUDGET	OPEN PO & CONTRACTS	YTD ACTUAL	REMAINING BALANCE	PERCENT PLAN	PERCENT ACTUAL	....PROJECTED.... OVER/UNDER	%
	SALARIES									
418,844	REGULAR WAGES	4000	6,120,005		418,844	5,701,161	8%	7%	(1,093,877)	-18%
94	DISASTER RECOVERY WAGE	4010			94	(94)			1,128	
23,671	OVERTIME	4300	500,000		23,671	476,329	8%	5%	(215,948)	-43%
	DISASTER RECOVERY OVER	4310								
442,609	**SALARIES**		**6,620,005**		**442,609**	**6,177,396**	**8%**	**7%**	**(1,308,697)**	**-20%**
	EMPLOYEE BENEFITS									
61,992	STATE RETIREMENT	4600	944,030		61,992	882,038	8%	7%	(200,126)	-21%
32,663	F.I.C.A. TAXES	4700	506,440		32,663	473,777	8%	6%	(114,484)	-23%
60,920	HOSPITALIZATION INS.	4800	923,940		60,920	863,020	8%	7%	(192,900)	-21%
	UNEMPLOYMENT BENEFITS	4900	16,000			16,000	8%	0%	(16,000)	-100%
	WORKMAN'S COMPENSATION	4910	140,000			140,000	8%	0%	(140,000)	-100%
155,575	**EMPLOYEE BENEFITS**		**2,530,410**		**155,575**	**2,374,835**	**8%**	**6%**	**(663,510)**	**-26%**
598,183	**PERSONAL SERVICES**		**9,150,415**		**598,183**	**8,552,232**	**8%**	**7%**	**(1,972,219)**	**-22%**
	OFFICE SUPPLIES									
	PAPER	5003	4,866	240		4,626	8%	0%	(4,866)	-100%
	PRINTED FORMS	5005								
317	OTHER EXPENDABLE OFF.S	5010	10,000	329	317	9,354	8%	3%	(6,196)	-62%
468	EXPENDABLE OFF.SPL-LIF	5012	4,800		468	4,332	8%	10%	816	17%
	MINOR OFFICE EQUIP/FUR	5020	1,000	149		851	8%	0%	(1,000)	-100%
	MICROFILM SUPPLIES	5030								
	PHOTO SUPPLIES	5040								
	SUBSCRIPTIONS,MAGS,MAP	5050	10,800			10,800	8%	0%	(10,800)	-100%
573	BOOKS	5070	2,000		573	1,427	8%	29%	4,876	244%
149	COMPUTER SUPPLIES	5080	24,525		149	24,376	8%	1%	(22,737)	-93%
	COMPUTR SUP-LLEBG '01	5081								
	COMPUTR SUP-COPS MORE'	5082								
1,506	**OFFICE SUPPLIES**		**57,991**	**718**	**1,506**	**55,766**	**8%**	**3%**	**(39,919)**	**-69%**
	OPERATING SUPPLIES									
2,245	CLEANING/JANITORIAL SP	5100	15,000		2,245	12,755	8%	15%	11,940	80%

			CITY OF HATTIESBURG							
	001100 - GENERAL FUND-POLICE/PUB.SFTY		EXPENDITURE REPORT							
			1 Months Ending 10/31/12							
THIS MONTH			ANNUAL	OPEN PO	YTD	REMAINING	PERCENT		....PROJECTED....	
ACTUAL		OBJ/SUB	BUDGET	& CONTRACTS	ACTUAL	BALANCE	PLAN	ACTUAL	OVER/UNDER	%
	HOUSEHOLD SUPPLIES	5110								
	FOOD	5115	1,250			1,250	8%	0%	(1,250)	-100%
	MEDICAL SUPPLIES	5120								
	CHEMICALS	5130								
580	FEED FOR ANIMALS	5150	4,500		580	3,920	8%	13%	2,460	55%
6,998	GAS AND OIL	5250	380,000		6,998	373,002	8%	2%	(296,024)	-78%
	LUBRICANTS	5255								
	DIESEL FUEL	5257	6,500			6,500	8%	0%	(6,500)	-100%
	OTHER FUEL	5260								
11,095	UNIFORMS, BADGES, ETC.	5350	84,000	12,784	11,095	60,120	8%	13%	49,140	59%
	WEARING APPAREL	5355	24,000	6,034		17,966	8%	0%	(24,000)	-100%
	ASPHALT & ASPHALT PROD	5400								
	CONCRETE, CEMENT, ETC.	5405								
	HORT./LANDSCAPING SPLY	5440								
	HAND TOOLS	5450								
1,165	MINOR EQUIPMENT	5460	20,000		1,165	18,835	8%	6%	(6,020)	-30%
	MINOR EQUIP-LLEBG '03	5461								
	MINOR EQUIP-BYRNE GRAN	5463								
	MINOR EQ-LLEBG/BYRNE'0	5464								
894	OTHER OPERATING MATL/S	5590	24,000	160	894	22,946	8%	4%	(13,272)	-55%
	OTHER OPER.MATL-METH.G	5591								
	OTHER OPER.MATLS-PRO S	5592								
	OTHER OPER.-ALCOHOL CN	5593								
	OTHER OPER-VICTIM ADVO	5594								
	OTHER OPER-LAW ENF.LIA	5596								
---			---	---	---	---	---	---	---	---
22,976	**OPERATING SUPPLIES**		**559,250**	**18,978**	**22,976**	**517,296**	**8%**	**4%**	**(283,538)**	**-51%**
	REPAIR & MAINTENANCE SP									
192	BUILDING MATERIALS & S	5600	3,000		192	2,808	8%	6%	(696)	-23%
	ELECTRICAL SUPPLIES	5605	2,000	300		1,700	8%	0%	(2,000)	-100%
	PLUMBING SUPPLIES	5610								
8	PAINT AND PAINTING SPL	5650	1,500	400	8	1,092	8%	1%	(1,404)	-94%
10,487	MTR VEHICLE REP. PTS/S	5700	105,900	3,137	10,487	92,276	8%	10%	19,944	19%
736	COMMUNICATION REPAIR P	5750	5,000	495	736	3,769	8%	15%	3,832	77%
	AGRICLTRL REPAIR PTS/S	5755								
	EXPENDABLE WELDING SPL	5770								
	MINOR COMPUTER EQUIP.	5800								

CITY OF HATTIESBURG
001100 - GENERAL FUND-POLICE/PUB.SFTY
EXPENDITURE REPORT
1 Months Ending 10/31/12

THIS MONTH ACTUAL		OBJ/SUB	ANNUAL BUDGET	OPEN PO & CONTRACTS	YTD ACTUAL	REMAINING BALANCE	PERCENT PLAN	PERCENT ACTUAL	....PROJECTED.... OVER/UNDER	%
844	OTHER REPAIR/MAINT. SP	5990	12,000	500	844	10,656	8%	7%	(1,872)	-16%
	REPR SPLY-8/29/05 STOR	5995								
---			---	---	---	---	---	---	---	---
12,267	**REPAIR & MAINTENANCE**		**129,400**	**4,832**	**12,267**	**112,302**	**8%**	**9%**	**17,804**	**14%**
---			---	---	---	---	---	---	---	---
36,749	**SUPPLIES AND EXPENSES**		**746,641**	**24,528**	**36,749**	**685,364**	**8%**	**5%**	**(305,653)**	**-41%**
	_____									
	PROFESSIONAL SERVICES									
	LEGAL	6025								
	MEDICAL	6027	40,000			40,000	8%	0%	(40,000)	-100%
	VETERINARIAN	6030	3,500			3,500	8%	0%	(3,500)	-100%
	ENTERTAINMENT	6033								
	DATA PROCESSING	6035								
	MICROFILM PROCESSING	6037								
	METRO CRIME STOPPERS	6039								
	OTHER PROF.-ALCOHOL CN	6047								
	OTHER PROF.-VICTIM'S A	6048								
235	OTHER PROFESSIONAL SER	6049	15,000		235	14,765	8%	2%	(12,180)	-81%
	POL.LATERAL TRNG FEE	6049 26								
---			---	---	---	---	---	---	---	---
235	**PROFESSIONAL SERVICE**		**58,500**		**235**	**58,265**	**8%**	**0%**	**(55,680)**	**-95%**
	COMMUNICATIONS									
1,987	TELEPHONE AND TELEGRAP	6060	30,000		1,987	28,013	8%	7%	(6,156)	-21%
	TELEPHONE-GRANT	6060 GRANT								
	TELEPHONE RENT	6065								
3,312	NETWORK WIRELESS	6069	30,000		3,312	26,688	8%	11%	9,744	32%
	POSTAGE	6070	200			200	8%	0%	(200)	-100%
	OTHER COMMUNICATION EX	6099								
---			---	---	---	---	---	---	---	---
5,299	**COMMUNICATIONS**		**60,200**		**5,299**	**54,901**	**8%**	**9%**	**3,388**	**6%**
	TRANSPORTATION									
	TRAVEL EXPENSE	6110	11,000			11,000	8%	0%	(11,000)	-100%
	TRVL EXP-TRAFFIC GRANT	6111								
	TRVL EXP-VICTIM'S ADV	6112								
	TRVL EXP-TERRORISM PRE	6113								
	TRAVEL EXP-PROJ SAFE N	6114								
	TRVL/TRNG-COP'S METH G	6116								

			CITY OF HATTIESBURG							
	001100 - GENERAL FUND-POLICE/PUB.SFTY		EXPENDITURE REPORT							
			1 Months Ending 10/31/12							
THIS MONTH			ANNUAL	OPEN PO	YTD	REMAINING	PERCENT		....PROJECTED....	
ACTUAL		OBJ/SUB	BUDGET	& CONTRACTS	ACTUAL	BALANCE	PLAN	ACTUAL	OVER/UNDER	%
	TRVL EXP-LAW ENF LIAIS	6118								
	TRVL EXP-ALCOHOL GRANT	6119	2,000			2,000	8%	0%	(2,000)	-100%
	FREIGHT	6120								
92	MESSENGER/EXPRESS SERV	6130	1,000		92	908	8%	9%	104	10%
---			---	---	---	---	---	---	---	---
92	**TRANSPORTATION**		**14,000**		**92**	**13,908**	**8%**	**1%**	**(12,896)**	**-92%**
	ADVERTISING									
	ADVERTISING	6150								
---			---	---	---	---	---	---	---	---
	ADVERTISING									
	PRINTING AND BINDING									
	PRINTING	6200	4,000			4,000	8%	0%	(4,000)	-100%
	BINDING	6205								
	FILM PROCESSING	6240								
---			---	---	---	---	---	---	---	---
	PRINTING AND BINDING		**4,000**			**4,000**	**8%**	**0%**	**(4,000)**	**-100%**
	INSURANCE									
	FIRE & EXTENDED COVERA	6250								
	PUBLIC LIAB/PROPERTY D	6255								
	BOILER MACHINERY	6260								
	AUTOMOBILE INSURANCE	6265	13,000			13,000	8%	0%	(13,000)	-100%
200	SURETY AND FORGERY BON	6270	650		200	450	8%	31%	1,750	269%
	OTHER INSURANCE	6299								
---			---	---	---	---	---	---	---	---
200	**INSURANCE**		**13,650**		**200**	**13,450**	**8%**	**1%**	**(11,250)**	**-82%**
	UTILITIES									
163	GAS	6300	7,000		163	6,837	8%	2%	(5,044)	-72%
6,781	ELECTRICITY	6305	88,000		6,781	81,219	8%	8%	(6,628)	-8%
---			---	---	---	---	---	---	---	---
6,945	**UTILITIES**		**95,000**		**6,945**	**88,055**	**8%**	**7%**	**(11,660)**	**-12%**
	REPR/MAINT-OUTSIDE LABO									
	BUILDING R&M	6350								
	8/29/05 STORM REPAIRS	6353								
	ELECTRICAL R&M	6355								
	PLUMBING EQUIPMENT R&M	6357								
6,042	OFFICE EQUIPMENT R&M	6365	40,000	3,444	6,042	30,514	8%	15%	32,504	81%
	OFF.EQ.R&M-COPS MORE	6366								

			CITY OF HATTIESBURG							
	001100 - GENERAL FUND-POLICE/PUB.SFTY		EXPENDITURE REPORT							
			1 Months Ending 10/31/12							
THIS MONTH			ANNUAL	OPEN PO	YTD	REMAINING	PERCENT		....PROJECTED....	
ACTUAL		OBJ/SUB	BUDGET	& CONTRACTS	ACTUAL	BALANCE	PLAN	ACTUAL	OVER/UNDER	%
	HOUSEHOLD EQUIPMENT R&	6370								
12,100	FIXED EQUIPMENT R&M	6380	30,000		12,100	17,900	8%	40%	115,200	384%
	MINOR EQUIPMENT R&M	6382								
8,075	MOTOR VEHICLE EQ. R&M	6384	90,000		8,075	81,925	8%	9%	6,900	8%
	AGRICULTURAL EQ. R&M	6387								
321	COMMUNICATION EQ. R&M	6390	2,000		321	1,679	8%	16%	1,852	93%
	CLEANING AND PAINTING	6392								
	DISINFECT./EXTERMINATI	6394	700			700	8%	0%	(700)	-100%
	SIGN PAINTING	6396								
295	TOW IN CHARGES	6398	6,500		295	6,205	8%	5%	(2,960)	-46%
	OTHER REPAIRS AND MAIN	6399								
---			---	---	---	---	---	---	---	---
26,833	**REPR/MAINT-OUTSIDE L**		**169,200**	**3,444**	**26,833**	**138,923**	**8%**	**16%**	**152,796**	**90%**
	RENTALS									
518	OFFICE EQUIPMENT RENT	6410	6,216		518	5,698	8%	8%		0%
	MOTORCYCLE RENT	6417	43,200			43,200	8%	0%	(43,200)	-100%
59	CYLINDER RENT	6425	600		59	541	8%	10%	108	18%
	UNIFORM RENT	6430								
	MOP-MAT-RAG RENT	6435								
	OTHER RENT	6449								
---			---	---	---	---	---	---	---	---
577	**RENTALS**		**50,016**		**577**	**49,439**	**8%**	**1%**	**(43,092)**	**-86%**
	OTHER SERVICES & CHARGE									
	EXHIBITIONS & PROMOTIO	6500								
	SETTLEMT OF DAMAGE CLA	6700								
	COURT COSTS	6710								
	JAIL EXPENSE	6815								
	EVIDENCE BUY MONEY	6817								
	THEFT LOSS	6818								
	CASH OVERAGE/SHORTAGE	6819								
	BANK SERV/TRF FEE	6832								
	REFUNDS	6835								
	POLICE FINE REFUNDS	6835 PF								
---			---	---	---	---	---	---	---	---
	REFUNDS									
205	NSF CHECKS	6836	5,000		205	4,796	8%	4%	(2,540)	-51%
	DUES AND MEMBERSHIPS	6840	6,225			6,225	8%	0%	(6,225)	-100%

			CITY OF HATTIESBURG							
	001100 - GENERAL FUND-POLICE/PUB.SFTY		EXPENDITURE REPORT							
			1 Months Ending 10/31/12							
THIS MONTH			ANNUAL	OPEN PO	YTD	REMAINING	PERCENT		....PROJECTED....	
ACTUAL		OBJ/SUB	BUDGET	& CONTRACTS	ACTUAL	BALANCE	PLAN	ACTUAL	OVER/UNDER	%
	REGISTRATION FEE/TUITI	6845	8,500			8,500	8%	0%	(8,500)	-100%
	LAUNDRY	6850								
	SERVICES NOT SPECIFIED	6999								
---			---	---	---	---	---	---	---	---
205	**OTHER SERVICES & CHA**		**19,725**		**205**	**19,521**	**8%**	**1%**	**(17,265)**	**-88%**
---			---	---	---	---	---	---	---	---
40,386	**OTHER SERVICES & CHAR**		**484,291**	**3,444**	**40,386**	**440,461**	**8%**	**8%**	**341**	**0%**
	BUILDING/BLD IMPROVEMEN									
	BUILDINGS	7100								
	POLICE SERV CTR BLDG	7100 22								
---			---	---	---	---	---	---	---	---
	BUILDINGS									
	BUILDING IMPROVEMENTS	7150								
	POLICE COMPLEX	7150 07								
	DEPOT SUBSTATION	7150 37								
	MOBILE ST SUBSTATION	7150 39								
	PALMERS CROSSING SUBS	7150 40								
---			---	---	---	---	---	---	---	---
	BUILDING IMPROVEMEN									
---			---	---	---	---	---	---	---	---
	BUILDING/BLD IMPROVE									
	IMPROVEMENT OTHER THAN									
	PARKING LOT/DRIVEWAY	7227								
	LANDSCAPING	7250								
	OTHER IMPROVEMENTS	7295								
---			---	---	---	---	---	---	---	---
	IMPROVEMENT OTHER TH									
	MACHINERY AND EQUIPMENT									
	8/29/05 STORM EQUIP	7302								
	EQUIP-METH GRANT	7303								
	EQUIP-DOMESTIC PREP	7312								
	EQUIP-HOMELAND SECURIT	7313								
	EQUIP-TERRORISM PREVEN	7314								
	EQUIP-TERRORISM '05	7316								
	EQ-DOMESTIC PREP'05	7318								
	EQUIP-PROJ SAFE NEIGHB	7319								

			CITY OF HATTIESBURG							
	001100 - GENERAL FUND-POLICE/PUB.SFTY		EXPENDITURE REPORT							
			1 Months Ending 10/31/12							
THIS MONTH			ANNUAL	OPEN PO	YTD	REMAINING	PERCENT		....PROJECTED....	
ACTUAL		OBJ/SUB	BUDGET	& CONTRACTS	ACTUAL	BALANCE	PLAN	ACTUAL	OVER/UNDER	%
	HOUSEHOLD FURN/EQUIP.	7320								
29,609	EQUIP-BYRNE '11	7323	83,000	50,219	29,609	3,172	8%	36%	272,308	328%
	EQUIP-BYRNE '12	7324								
	OFFICE FURN/EQUIP.	7325								
	COPS TECH GRANT EQUIP	7326								
	DATA PROCESSING EQUIP.	7327								
	FEMA-EMER.WARNING SIRE	7330								
	EQUIP-JUSTICE ASSIST G	7331								
	COMMUNICATION EQUIPMEN	7355								
	TRAFFIC CONTROL EQUIP.	7360								
	EQUIP-BYRNE '09	7375								
	OTHER EQUIP-STOP VIOL	7397								
	OTHER EQUIP-ALCOHOL GR	7398	1,440			1,440	8%	0%	(1,440)	-100%
	OTHER EQUIPMENT	7399								
---			---	---	---	---	---	---	---	---
29,609	**MACHINERY AND EQUIPM**		**84,440**	**50,219**	**29,609**	**4,612**	**8%**	**35%**	**270,868**	**321%**
	VEHICLES									
	AUTOMOBILES	7400	480,000			480,000	8%	0%	(480,000)	-100%
	AUTOMOBILES-METH GRANT	7401								
	AUTOMOBILES-BYRNE GRAN	7402								
	MOTORCYCLES	7405								
	PICK UP TRUCKS	7420								
---			---	---	---	---	---	---	---	---
	VEHICLES		**480,000**			**480,000**	**8%**	**0%**	**(480,000)**	**-100%**
	OTHER									
	ZOOLOGICAL ANIMALS	7505								
---			---	---	---	---	---	---	---	---
	OTHER									
---			---	---	---	---	---	---	---	---
29,609	**CAPITAL OUTLAY**		**564,440**	**50,219**	**29,609**	**484,612**	**8%**	**5%**	**(209,132)**	**-37%**
---			---	---	---	---	---	---	---	---
704,927	**EXPENDITURES**		**10,945,787**	**78,191**	**704,927**	**10,162,668**	**8%**	**6%**	**(2,486,663)**	**-23%**

CITY OF HATTIESBURG
001131 - GENERAL FUND-JOINT P&FTRNG.
EXPENDITURE REPORT
1 Months Ending 10/31/12

THIS MONTH ACTUAL		OBJ/SUB	ANNUAL BUDGET	OPEN PO & CONTRACTS	YTD ACTUAL	REMAINING BALANCE	PERCENT PLAN	PERCENT ACTUAL	....PROJECTED.... OVER/UNDER	%
	SALARIES									
1,695	REGULAR WAGES	4000	22,040		1,695	20,345	8%	8%	(1,700)	-8%
	DISASTER RECOVERY WAGE	4010								
	OVERTIME	4300	1,000			1,000	8%	0%	(1,000)	-100%
	DISASTER RECOVERY OVER	4310								
---			---	---	---	---	---	---	---	---
1,695	**SALARIES**		**23,040**		**1,695**	**21,345**	**8%**	**7%**	**(2,700)**	**-12%**
	EMPLOYEE BENEFITS									
242	STATE RETIREMENT	4600	3,290		242	3,048	8%	7%	(386)	-12%
128	F.I.C.A. TAXES	4700	1,770		128	1,642	8%	7%	(234)	-13%
388	HOSPITALIZATION INS.	4800	5,220		388	4,832	8%	7%	(564)	-11%
	UNEMPLOYMENT BENEFITS	4900								
	WORKMAN'S COMPENSATION	4910	113			113	8%	0%	(113)	-100%
---			---	---	---	---	---	---	---	---
758	**EMPLOYEE BENEFITS**		**10,393**		**758**	**9,635**	**8%**	**7%**	**(1,297)**	**-12%**
---			---	---	---	---	---	---	---	---
2,453	**PERSONAL SERVICES**		**33,433**		**2,453**	**30,980**	**8%**	**7%**	**(3,997)**	**-12%**
	OFFICE SUPPLIES									
	PAPER	5003	600			600	8%	0%	(600)	-100%
	PRINTED FORMS	5005	600			600	8%	0%	(600)	-100%
51	OTHER EXPENDABLE OFF.S	5010	3,000	295	51	2,654	8%	2%	(2,388)	-80%
	SPLY-RRT COORDINATOR	5013	300			300	8%	0%	(300)	-100%
231	MINOR OFFICE EQUIP/FUR	5020	3,000		231	2,769	8%	8%	(228)	-8%
	CASSETTES, TAPES	5035								
	PHOTO SUPPLIES	5040	500			500	8%	0%	(500)	-100%
	SUBSCRIPTIONS,MAGS,MAP	5050	800	49		751	8%	0%	(800)	-100%
	BOOKS-POLICE	5070	1,200			1,200	8%	0%	(1,200)	-100%
	BOOKS-FIRE	5071	3,000			3,000	8%	0%	(3,000)	-100%
	COMPUTER SUPPLIES	5080	1,200			1,200	8%	0%	(1,200)	-100%
---			---	---	---	---	---	---	---	---
282	**OFFICE SUPPLIES**		**14,200**	**344**	**282**	**13,574**	**8%**	**2%**	**(10,816)**	**-76%**
	OPERATING SUPPLIES									
	CLEANING/JANITORIAL SP	5100	3,000	324		2,676	8%	0%	(3,000)	-100%
	HOUSEHOLD SUPPLIES	5110	1,500			1,500	8%	0%	(1,500)	-100%

CITY OF HATTIESBURG
001131 - GENERAL FUND-JOINT P&FTRNG.
EXPENDITURE REPORT
1 Months Ending 10/31/12

THIS MONTH ACTUAL		OBJ/SUB	ANNUAL BUDGET	OPEN PO & CONTRACTS	YTD ACTUAL	REMAINING BALANCE	PERCENT PLAN	PERCENT ACTUAL	....PROJECTED.... OVER/UNDER	%
20	FOOD	5115	2,000		20	1,980	8%	1%	(1,760)	-88%
	MEDICAL SUPPLIES	5120	2,000			2,000	8%	0%	(2,000)	-100%
	GAS AND OIL	5250	2,000			2,000	8%	0%	(2,000)	-100%
	WEARING APPAREL-POLICE	5355	2,500			2,500	8%	0%	(2,500)	-100%
	WEARING APPAREL-FIRE	5356	2,500			2,500	8%	0%	(2,500)	-100%
	ASPHALT & ASPHALT PROD	5400								
	CONCRETE, CEMENT, ETC.	5405	12,000			12,000	8%	0%	(12,000)	-100%
	BRICK,STONE,MORTAR,ETC	5410								
	SAND,CLAY,GRVL,FILL DI	5415	5,000			5,000	8%	0%	(5,000)	-100%
	HORT./LANDSCAPING SPLY	5440	500			500	8%	0%	(500)	-100%
	HAND TOOLS	5450	1,000			1,000	8%	0%	(1,000)	-100%
	MINOR EQUIPMENT-POLICE	5460	8,000	5,645		2,355	8%	0%	(8,000)	-100%
	MINOR EQUIPMENT-FIRE	5462	9,000			9,000	8%	0%	(9,000)	-100%
	MINOR EQUIP-REGIONAL R	5463	5,000			5,000	8%	0%	(5,000)	-100%
	SWIFT WATER RESCUE SUP	5465	1,500	196		1,304	8%	0%	(1,500)	-100%
	HAZ.MAT SUPPLIES	5466	10,000			10,000	8%	0%	(10,000)	-100%
	P&F CLASSES-(FEE) SUPP	5469								
	OTHER OPER.MATL-POLICE	5590	30,000	4,945		25,055	8%	0%	(30,000)	-100%
1,962	OTHER OPER.MATL-FIRE	5591	16,000	729	1,962	13,309	8%	12%	7,544	47%
---			---	---	---	---	---	---	---	---
1,982	**OPERATING SUPPLIES**		**113,500**	**11,839**	**1,982**	**99,679**	**8%**	**2%**	**(89,716)**	**-79%**
	REPAIR & MAINTENANCE SP									
	BUILDING MATERIALS & S	5600	6,000			6,000	8%	0%	(6,000)	-100%
	ELECTRICAL SUPPLIES	5605	1,800			1,800	8%	0%	(1,800)	-100%
442	PLUMBING SUPPLIES	5610	1,200		442	758	8%	37%	4,104	342%
	PAINT AND PAINTING SPL	5650	1,500			1,500	8%	0%	(1,500)	-100%
	MTR VEHICLE REP. PTS/S	5700	1,068			1,068	8%	0%	(1,068)	-100%
566	OTHER REPAIR/MAINT. SP	5990	7,100		566	6,534	8%	8%	(308)	-4%
---			---	---	---	---	---	---	---	---
1,008	**REPAIR & MAINTENANCE**		**18,668**		**1,008**	**17,660**	**8%**	**5%**	**(6,572)**	**-35%**
---			---	---	---	---	---	---	---	---
3,272	**SUPPLIES AND EXPENSES**		**146,368**	**12,183**	**3,272**	**130,913**	**8%**	**2%**	**(107,104)**	**-73%**
	_____									
	PROFESSIONAL SERVICES									
	MEDICAL	6027	200			200	8%	0%	(200)	-100%
	P&F CLASSES-(FEE) SERV	6045	100			100	8%	0%	(100)	-100%
	OTHER PROFESSIONAL SER	6049	1,000			1,000	8%	0%	(1,000)	-100%

			CITY OF HATTIESBURG							
	001131 - GENERAL FUND-JOINT P&FTRNG.		EXPENDITURE REPORT							
			1 Months Ending 10/31/12							
THIS MONTH			ANNUAL	OPEN PO	YTD	REMAINING	PERCENT		....PROJECTED....	
ACTUAL		OBJ/SUB	BUDGET	& CONTRACTS	ACTUAL	BALANCE	PLAN	ACTUAL	OVER/UNDER	%
	RRT PLANNING-HOMELAND	6049 21								
12,960	RRT TRAINING-HOMELAND	6049 22	43,920		12,960	30,960	8%	30%	111,600	254%
	H'BURG HIGH-HOMELAND	6049 23								
	MGMT/ADMIN-HOMELAND S	6049 24								
	OTHER-CITY HOMELAND S	6049 25								
	OTHER	6049 99								
---			---	---	---	---	---	---	---	---
12,960	**OTHER PROFESSIONAL**		**44,920**		**12,960**	**31,960**	**8%**	**29%**	**110,600**	**246%**
---			---	---	---	---	---	---	---	---
12,960	**PROFESSIONAL SERVICE**		**45,220**		**12,960**	**32,260**	**8%**	**29%**	**110,300**	**244%**
	COMMUNICATIONS									
	TELEPHONE AND TELEGRAP	6060	500	450		50	8%	0%	(500)	-100%
	TELEPHONE-RRT COORDINA	6060 GRANT	200			200	8%	0%	(200)	-100%
	POSTAGE	6070	100			100	8%	0%	(100)	-100%
---			---	---	---	---	---	---	---	---
	COMMUNICATIONS		**800**	**450**		**350**	**8%**	**0%**	**(800)**	**-100%**
	TRANSPORTATION									
	TRVL EXP-POLICE	6110	8,000			8,000	8%	0%	(8,000)	-100%
690	TRVL EXP-FIRE	6111	8,000		690	7,310	8%	9%	280	4%
	TRVL EXP-RRT COORDINAT	6112	1,212			1,212	8%	0%	(1,212)	-100%
	TRVL EXP-RESPONSE TEAM	6116	1,000			1,000	8%	0%	(1,000)	-100%
	FREIGHT	6120	300			300	8%	0%	(300)	-100%
---			---	---	---	---	---	---	---	---
690	**TRANSPORTATION**		**18,512**		**690**	**17,822**	**8%**	**4%**	**(10,232)**	**-55%**
	ADVERTISING									
	ADVERTISING	6150								
---			---	---	---	---	---	---	---	---
	ADVERTISING									
	PRINTING AND BINDING									
	PRINTING	6200								
	FILM PROCESSING	6240								
---			---	---	---	---	---	---	---	---
	PRINTING AND BINDING									
	INSURANCE									
	BOILER MACHINERY	6260								
	SURETY AND FORGERY BON	6270								
	OTHER INSURANCE	6299								

CITY OF HATTIESBURG
001131 - GENERAL FUND-JOINT P&FTRNG.
EXPENDITURE REPORT
1 Months Ending 10/31/12

THIS MONTH ACTUAL		OBJ/SUB	ANNUAL BUDGET	OPEN PO & CONTRACTS	YTD ACTUAL	REMAINING BALANCE	PERCENT PLAN	PERCENT ACTUAL	....PROJECTED.... OVER/UNDER	%
	INSURANCE									
	UTILITIES									
89	GAS	6300	5,000		89	4,911	8%	2%	(3,932)	-79%
1,506	ELECTRICITY	6305	19,232		1,506	17,726	8%	8%	(1,160)	-6%
	WATER	6315								
1,595	**UTILITIES**		**24,232**		**1,595**	**22,637**	**8%**	**7%**	**(5,092)**	**-21%**
	REPR/MAINT-OUTSIDE LABO									
	BUILDING R&M	6350	3,000			3,000	8%	0%	(3,000)	-100%
	OFFICE EQUIPMENT R&M	6365	1,500			1,500	8%	0%	(1,500)	-100%
	MINOR EQUIPMENT R&M	6382	600	131		469	8%	0%	(600)	-100%
	MOTOR VEHICLE EQ. R&M	6384	800			800	8%	0%	(800)	-100%
	CLEANING AND PAINTING	6392	400			400	8%	0%	(400)	-100%
	DISINFECT./EXTERMINATI	6394	1,300			1,300	8%	0%	(1,300)	-100%
	OTHER REPAIRS AND MAIN	6399	5,100			5,100	8%	0%	(5,100)	-100%
	REPR/MAINT-OUTSIDE L		**12,700**	**131**		**12,569**	**8%**	**0%**	**(12,700)**	**-100%**
	RENTALS									
995	OTHER RENT	6449	3,500		995	2,505	8%	28%	8,440	241%
995	**RENTALS**		**3,500**		**995**	**2,505**	**8%**	**28%**	**8,440**	**241%**
	OTHER SERVICES & CHARGE									
	PETTY CASH LOSS/STORM	6818								
	DUES AND MEMBERSHIPS	6840	500			500	8%	0%	(500)	-100%
295	REGISTRATN FEE-POLICE	6845	8,500	1,275	295	6,930	8%	3%	(4,960)	-58%
715	REGISTRATN FEE-FIRE	6846	8,500		715	7,785	8%	8%	80	1%
	SERVICES NOT SPECIFIED	6999	300			300	8%	0%	(300)	-100%
1,010	**OTHER SERVICES & CHA**		**17,800**	**1,275**	**1,010**	**15,515**	**8%**	**6%**	**(5,680)**	**-32%**
17,250	**OTHER SERVICES & CHAR**		**122,764**	**1,856**	**17,250**	**103,658**	**8%**	**14%**	**84,236**	**69%**
	BUILDING/BLD IMPROVEMEN									
	BUILDING IMPROVEMENTS	7150								
38,500	P&F TRAINING BLDG	7150 34		36,194	38,500	(74,694)			462,000	

			CITY OF HATTIESBURG							
	001131 - GENERAL FUND-JOINT P&FTRNG.		EXPENDITURE REPORT							
			1 Months Ending 10/31/12							
THIS MONTH			ANNUAL	OPEN PO	YTD	REMAINING	PERCENT		....PROJECTED....	
ACTUAL		OBJ/SUB	BUDGET	& CONTRACTS	ACTUAL	BALANCE	PLAN	ACTUAL	OVER/UNDER	%
38,500	**BUILDING IMPROVEMEN**			**36,194**	**38,500**	**(74,694)**			**462,000**	
---			---	---	---	---	---	---	---	---
38,500	**BUILDING/BLD IMPROVE**			**36,194**	**38,500**	**(74,694)**			**462,000**	
	IMPROVEMENT OTHER THAN									
	PARKING LOT/DRIVEWAY	7227								
---			---	---	---	---	---	---	---	---
	IMPROVEMENT OTHER TH									
	MACHINERY AND EQUIPMENT									
	EQUIP-RESPONSE TEAM'07	7311								
	EQUIP-RESPONSE TEAM'04	7314								
	EQUIP-CITY HOMELAND SE	7316								
	OFFICE FURN/EQUIP.	7325								
	COMMUNICATION EQUIPMEN	7355								
	TRAFFIC CONTROL EQUIP.	7360								
	OTHER EQUIP-HAZ.MAT	7398								
	OTHER EQUIPMENT	7399								
---			---	---	---	---	---	---	---	---
	MACHINERY AND EQUIPM									
	VEHICLES									
	AUTOMOBILES	7400								
	BUSES	7410								
---			---	---	---	---	---	---	---	---
	VEHICLES									
---			---	---	---	---	---	---	---	---
38,500	**CAPITAL OUTLAY**			**36,194**	**38,500**	**(74,694)**			**462,000**	
---			---	---	---	---	---	---	---	---
61,476	**EXPENDITURES**		**302,565**	**50,233**	**61,476**	**190,857**	**8%**	**20%**	**435,147**	**144%**

			CITY OF HATTIESBURG							
	001160 - GENERAL FUND-FIRE DIVISION		EXPENDITURE REPORT							
			1 Months Ending 10/31/12							
THIS MONTH			ANNUAL	OPEN PO	YTD	REMAINING	PERCENT		....PROJECTED....	
ACTUAL		OBJ/SUB	BUDGET	& CONTRACTS	ACTUAL	BALANCE	PLAN	ACTUAL	OVER/UNDER	%
	SALARIES									
325,483	REGULAR WAGES	4000	4,520,628		325,483	4,195,145	8%	7%	(614,832)	-14%
3,449	DISASTER RECOVERY WAGE	4010			3,449	(3,449)			41,388	
33,751	OVERTIME	4300	226,500		33,751	192,749	8%	15%	178,512	79%
	DISASTER RECOVERY OVER	4310								
---			---	---	---	---	---	---	---	---
362,683	**SALARIES**		**4,747,128**		**362,683**	**4,384,445**	**8%**	**8%**	**(394,932)**	**-8%**
	EMPLOYEE BENEFITS									
49,985	STATE RETIREMENT	4600	678,150		49,985	628,165	8%	7%	(78,330)	-12%
25,460	F.I.C.A. TAXES	4700	363,810		25,460	338,350	8%	7%	(58,290)	-16%
44,996	HOSPITALIZATION INS.	4800	652,500		44,996	607,504	8%	7%	(112,548)	-17%
	UNEMPLOYMENT BENEFITS	4900								
	WORKMAN'S COMPENSATION	4910	165,000			165,000	8%	0%	(165,000)	-100%
---			---	---	---	---	---	---	---	---
120,440	**EMPLOYEE BENEFITS**		**1,859,460**		**120,440**	**1,739,020**	**8%**	**6%**	**(414,180)**	**-22%**
---			---	---	---	---	---	---	---	---
483,124	**PERSONAL SERVICES**		**6,606,588**		**483,124**	**6,123,464**	**8%**	**7%**	**(809,100)**	**-12%**
	OFFICE SUPPLIES									
198	PAPER	5003	500		198	302	8%	40%	1,876	375%
	PRINTED FORMS	5005	500			500	8%	0%	(500)	-100%
1,189	OTHER EXPENDABLE OFF.S	5010	3,207		1,189	2,018	8%	37%	11,061	345%
46	MINOR OFFICE EQUIP/FUR	5020	9,750		46	9,704	8%	0%	(9,198)	-94%
	CASSETTES, TAPES	5035								
	PHOTO SUPPLIES	5040								
	SUBSCRIPTIONS,MAGS,MAP	5050	160			160	8%	0%	(160)	-100%
	BOOKS	5070	1,000	729		271	8%	0%	(1,000)	-100%
	COMPUTER SUPPLIES	5080	1,000			1,000	8%	0%	(1,000)	-100%
---			---	---	---	---	---	---	---	---
1,433	**OFFICE SUPPLIES**		**16,117**	**729**	**1,433**	**13,955**	**8%**	**9%**	**1,079**	**7%**
	OPERATING SUPPLIES									
3,406	CLEANING/JANITORIAL SP	5100	12,000	642	3,406	7,952	8%	28%	28,872	241%
	HOUSEHOLD SUPPLIES	5110	3,000			3,000	8%	0%	(3,000)	-100%
	FOOD	5115	400			400	8%	0%	(400)	-100%
1,464	MEDICAL SUPPLIES	5120	5,470		1,464	4,006	8%	27%	12,098	221%

CITY OF HATTIESBURG
001160 - GENERAL FUND-FIRE DIVISION
EXPENDITURE REPORT
1 Months Ending 10/31/12

THIS MONTH ACTUAL		OBJ/SUB	ANNUAL BUDGET	OPEN PO & CONTRACTS	YTD ACTUAL	REMAINING BALANCE	PERCENT PLAN	PERCENT ACTUAL	....PROJECTED.... OVER/UNDER	%
	LABORATORY SUPPLIES	5125								
	CHEMICALS	5130								
177	GAS AND OIL	5250	21,000		177	20,823	8%	1%	(18,876)	-90%
	LUBRICANTS	5255	2,214			2,214	8%	0%	(2,214)	-100%
2,041	DIESEL FUEL	5257	85,000		2,041	82,959	8%	2%	(60,508)	-71%
	OTHER FUEL	5260	200			200	8%	0%	(200)	-100%
	UNIFORMS, BADGES, ETC.	5350	48,000	1,040		46,960	8%	0%	(48,000)	-100%
1,413	WEARING APPAREL	5355	15,000		1,413	13,587	8%	9%	1,956	13%
	ASPHALT & ASPHALT PROD	5400								
	CONCRETE, CEMENT, ETC.	5405	25,000			25,000	8%	0%	(25,000)	-100%
	HORT./LANDSCAPING SPLY	5440	400			400	8%	0%	(400)	-100%
	HAND TOOLS	5450	2,600			2,600	8%	0%	(2,600)	-100%
796	MINOR EQUIPMENT	5460	9,000		796	8,204	8%	9%	552	6%
	MINOR FIRE FIGHTING EQ	5462	10,000	627		9,373	8%	0%	(10,000)	-100%
	SWIFT WATER RESCUE SUP	5465								
	FIRE HOSE	5470	6,000			6,000	8%	0%	(6,000)	-100%
	RECREATIONAL SUPPLIES	5510								
(10)	SFTY/FIRE P/MATL CONTR	5535	4,000		10-	4,010	8%	0%	(3,880)	-97%
59	OTHER OPERATING MATL/S	5590	3,000		59	2,941	8%	2%	(2,292)	-76%
---			---	---	---	---	---	---	---	---
9,346	**OPERATING SUPPLIES**		**252,284**	**2,309**	**9,346**	**240,629**	**8%**	**4%**	**(140,132)**	**-56%**
	REPAIR & MAINTENANCE SP									
221	BUILDING MATERIALS & S	5600	15,000	484	221	14,295	8%	1%	(12,348)	-82%
744	ELECTRICAL SUPPLIES	5605	3,500		744	2,756	8%	21%	5,428	155%
10	PLUMBING SUPPLIES	5610	1,550		10	1,540	8%	1%	(1,430)	-92%
158	PAINT AND PAINTING SPL	5650	2,200		158	2,042	8%	7%	(304)	-14%
6,623	MTR VEHICLE REP. PTS/S	5700	60,000	1,761	6,623	51,616	8%	11%	19,476	32%
	COMMUNICATION REPAIR P	5750	5,000			5,000	8%	0%	(5,000)	-100%
	AGRICLTRL REPAIR PTS/S	5755	100			100	8%	0%	(100)	-100%
	SCBA REPAIR PTS/SPL	5756	10,104			10,104	8%	0%	(10,104)	-100%
	MINOR COMPUTER EQUIP.	5800	2,700	74		2,626	8%	0%	(2,700)	-100%
	OTHER REPAIR/MAINT. SP	5990	300			300	8%	0%	(300)	-100%
	REPR SPLY-8/29/05 STOR	5995								
---			---	---	---	---	---	---	---	---
7,757	**REPAIR & MAINTENANCE**		**100,454**	**2,319**	**7,757**	**90,379**	**8%**	**8%**	**(7,370)**	**-7%**
---			---	---	---	---	---	---	---	---
18,536	**SUPPLIES AND EXPENSES**		**368,855**	**5,357**	**18,536**	**344,962**	**8%**	**5%**	**(146,423)**	**-40%**

			CITY OF HATTIESBURG							
	001160 - GENERAL FUND-FIRE DIVISION		EXPENDITURE REPORT							
			1 Months Ending 10/31/12							
THIS MONTH			ANNUAL	OPEN PO	YTD	REMAINING	PERCENT		....PROJECTED....	
ACTUAL		OBJ/SUB	BUDGET	& CONTRACTS	ACTUAL	BALANCE	PLAN	ACTUAL	OVER/UNDER	%
	PROFESSIONAL SERVICES									
	APPRAISAL	6017								
	MEDICAL	6027	36,950			36,950	8%	0%	(36,950)	-100%
	ENTERTAINMENT	6033								
750	OTHER PROFESSIONAL SER	6049	12,000		750	11,250	8%	6%	(3,000)	-25%
---			---	---	---	---	---	---	---	---
750	**PROFESSIONAL SERVICE**		**48,950**		**750**	**48,200**	**8%**	**2%**	**(39,950)**	**-82%**
	COMMUNICATIONS									
506	TELEPHONE AND TELEGRAP	6060	6,600		506	6,094	8%	8%	(528)	-8%
	NETWORK	6068								
	NETWORK WIRELESS-GRANT	6069								
	POSTAGE	6070	50			50	8%	0%	(50)	-100%
---			---	---	---	---	---	---	---	---
506	**COMMUNICATIONS**		**6,650**		**506**	**6,144**	**8%**	**8%**	**(578)**	**-9%**
	TRANSPORTATION									
	TRAVEL EXPENSE	6110	10,000			10,000	8%	0%	(10,000)	-100%
	FREIGHT	6120	150			150	8%	0%	(150)	-100%
	MESSENGER/EXPRESS SERV	6130								
---			---	---	---	---	---	---	---	---
	TRANSPORTATION		**10,150**			**10,150**	**8%**	**0%**	**(10,150)**	**-100%**
	ADVERTISING									
1,600	ADVERTISING	6150	2,247		1,600	647	8%	71%	16,953	754%
---			---	---	---	---	---	---	---	---
1,600	**ADVERTISING**		**2,247**		**1,600**	**647**	**8%**	**71%**	**16,953**	**754%**
	PRINTING AND BINDING									
	PRINTING	6200	870	142		728	8%	0%	(870)	-100%
	FILM PROCESSING	6240								
---			---	---	---	---	---	---	---	---
	PRINTING AND BINDING		**870**	**142**		**728**	**8%**	**0%**	**(870)**	**-100%**
	INSURANCE									
	PUBLIC LIAB/PROPERTY D	6255								
	BOILER MACHINERY	6260								
	AUTOMOBILE INSURANCE	6265								
	SURETY AND FORGERY BON	6270	50			50	8%	0%	(50)	-100%
	OTHER INSURANCE	6299								
---			---	---	---	---	---	---	---	---

			CITY OF HATTIESBURG							
	001160 - GENERAL FUND-FIRE DIVISION		EXPENDITURE REPORT							
			1 Months Ending 10/31/12							
THIS MONTH			ANNUAL	OPEN PO	YTD	REMAINING	PERCENT		....PROJECTED....	
ACTUAL		OBJ/SUB	BUDGET	& CONTRACTS	ACTUAL	BALANCE	PLAN	ACTUAL	OVER/UNDER	%
	INSURANCE		**50**			**50**	**8%**	**0%**	**(50)**	**-100%**
	UTILITIES									
370	GAS	6300	19,000		370	18,630	8%	2%	(14,560)	-77%
5,886	ELECTRICITY	6305	70,000		5,886	64,114	8%	8%	632	1%
29	WATER	6315	325		29	296	8%	9%	23	7%
---			---	---	---	---	---	---	---	---
6,285	**UTILITIES**		**89,325**		**6,285**	**83,040**	**8%**	**7%**	**(13,905)**	**-16%**
	REPR/MAINT-OUTSIDE LABO									
6,250	BUILDING R&M	6350	78,188	2,000	6,250	69,938	8%	8%	(3,188)	-4%
	8/29/05 STORM REPAIRS	6353								
	ELECTRICAL R&M	6355	200			200	8%	0%	(200)	-100%
	PLUMBING EQUIPMENT R&M	6357	1,600			1,600	8%	0%	(1,600)	-100%
	STREETS & STRUCTURES R	6360								
196	OFFICE EQUIPMENT R&M	6365	1,870		196	1,674	8%	10%	482	26%
	HOUSEHOLD EQUIPMENT R&	6370	2,400	1,170		1,230	8%	0%	(2,400)	-100%
	FIXED EQUIPMENT R&M	6380	725			725	8%	0%	(725)	-100%
38	MINOR EQUIPMENT R&M	6382	1,000	183	38	779	8%	4%	(544)	-54%
5,571	MOTOR VEHICLE EQ. R&M	6384	40,000		5,571	34,429	8%	14%	26,852	67%
	AGRICULTURAL EQ. R&M	6387	500			500	8%	0%	(500)	-100%
	SCBA EQUIP. R&M	6389	9,300			9,300	8%	0%	(9,300)	-100%
515	COMMUNICATION EQ. R&M	6390	6,000	864	515	4,622	8%	9%	180	3%
	DISINFECT./EXTERMINATI	6394	2,000			2,000	8%	0%	(2,000)	-100%
	SIGN PAINTING	6396								
125	TOW IN CHARGES	6398	1,150		125	1,025	8%	11%	350	30%
	OTHER REPAIRS AND MAIN	6399	4,430			4,430	8%	0%	(4,430)	-100%
---			---	---	---	---	---	---	---	---
12,695	**REPR/MAINT-OUTSIDE L**		**149,363**	**4,217**	**12,695**	**132,451**	**8%**	**8%**	**2,977**	**2%**
	RENTALS									
	OFFICE EQUIPMENT RENT	6410	200			200	8%	0%	(200)	-100%
	MACHINERY RENT	6420	890			890	8%	0%	(890)	-100%
98	CYLINDER RENT	6425	2,600		98	2,502	8%	4%	(1,424)	-55%
	UNIFORM RENT	6430								
	MOP-MAT-RAG RENT	6435								
	OTHER RENT	6449								
---			---	---	---	---	---	---	---	---
98	**RENTALS**		**3,690**		**98**	**3,592**	**8%**	**3%**	**(2,514)**	**-68%**
	OTHER SERVICES & CHARGE									

			CITY OF HATTIESBURG							
	001160 - GENERAL FUND-FIRE DIVISION		EXPENDITURE REPORT							
			1 Months Ending 10/31/12							
THIS MONTH			ANNUAL	OPEN PO	YTD	REMAINING	PERCENT		....PROJECTED....	
ACTUAL		OBJ/SUB	BUDGET	& CONTRACTS	ACTUAL	BALANCE	PLAN	ACTUAL	OVER/UNDER	%
	DUES AND MEMBERSHIPS	6840	1,450			1,450	8%	0%	(1,450)	-100%
	REGISTRATION FEE/TUITI	6845	1,000			1,000	8%	0%	(1,000)	-100%
	LAUNDRY	6850	100			100	8%	0%	(100)	-100%
	SERVICES NOT SPECIFIED	6999	3,250			3,250	8%	0%	(3,250)	-100%
---			---	---	---	---	---	---	---	---
	OTHER SERVICES & CHA		**5,800**			**5,800**	**8%**	**0%**	**(5,800)**	**-100%**
---			---	---	---	---	---	---	---	---
21,934	**OTHER SERVICES & CHAR**		**317,095**	**4,359**	**21,934**	**290,802**	**8%**	**7%**	**(53,887)**	**-17%**
	BUILDING/BLD IMPROVEMEN									
	BUILDINGS	7100								
	FIRE STATION-PW8294	7100 20								
	FIRE STATION-CDBG	7100 21								
	STORAGE BUILDING	7100 23								
---			---	---	---	---	---	---	---	---
	BUILDINGS									
---			---	---	---	---	---	---	---	---
	BUILDING/BLD IMPROVE									
	IMPROVEMENT OTHER THAN									
	PARKING LOT/DRIVEWAY	7227								
	LANDSCAPING	7250								
	OTHER IMPROVEMENTS	7295								
---			---	---	---	---	---	---	---	---
	IMPROVEMENT OTHER TH									
	MACHINERY AND EQUIPMENT									
	8/29/05 STORM EQUIP	7302								
	LABORATORY	7310								
	FIRE FIGHTING	7315								
	EQUIP-SCBA-'11 AF GRAN	7317								
	HOUSEHOLD FURN/EQUIP.	7320								
	OFFICE FURN/EQUIP.	7325								
	DATA PROCESSING EQUIP.	7327								
	EQ-WIRELESS NETWORK GR	7331								
	AGRICULTURAL EQUIPMENT	7335								
	COMMUNICATION EQUIPMEN	7355								
	TRAFFIC CONTROL EQUIP.	7360								
	HYDRANTS & METERS	7365								

			CITY OF HATTIESBURG							
	001160 - GENERAL FUND-FIRE DIVISION		EXPENDITURE REPORT							
			1 Months Ending 10/31/12							
THIS MONTH			ANNUAL	OPEN PO	YTD	REMAINING	PERCENT		....PROJECTED....	
ACTUAL		OBJ/SUB	BUDGET	& CONTRACTS	ACTUAL	BALANCE	PLAN	ACTUAL	OVER/UNDER	%
	OTHER EQUIPMENT	7399								
---			---	---	---	---	---	---	---	---
	MACHINERY AND EQUIPM									
	VEHICLES									
	AUTOMOBILES	7400								
	PICK UP TRUCKS	7420								
	HEAVY TRUCKS	7430								
---			---	---	---	---	---	---	---	---
	VEHICLES									
---			---	---	---	---	---	---	---	---
	CAPITAL OUTLAY									
---			---	---	---	---	---	---	---	---
523,594	**EXPENDITURES**		**7,292,538**	**9,716**	**523,594**	**6,759,228**	**8%**	**7%**	**(1,009,410)**	**-14%**

			CITY OF HATTIESBURG							
	001180 - GENERAL FUND-LAND DEVEL.ADM.		EXPENDITURE REPORT							
			1 Months Ending 10/31/12							
THIS MONTH			ANNUAL	OPEN PO	YTD	REMAINING	PERCENT		....PROJECTED....	
ACTUAL		OBJ/SUB	BUDGET	& CONTRACTS	ACTUAL	BALANCE	PLAN	ACTUAL	OVER/UNDER	%
	SALARIES									
28,406	REGULAR WAGES	4000	377,159		28,406	348,753	8%	8%	(36,287)	-10%
	DISASTER RECOVERY WAGE	4010								
	OVERTIME	4300								
	DISASTER RECOVERY OVER	4310								
---			---	---	---	---	---	---	---	---
28,406	**SALARIES**		**377,159**		**28,406**	**348,753**	**8%**	**8%**	**(36,287)**	**-10%**
	EMPLOYEE BENEFITS									
4,051	STATE RETIREMENT	4600	53,795		4,051	49,744	8%	8%	(5,183)	-10%
2,123	F.I.C.A. TAXES	4700	28,860		2,123	26,737	8%	7%	(3,384)	-12%
5,432	HOSPITALIZATION INS.	4800	73,080		5,432	67,648	8%	7%	(7,896)	-11%
	UNEMPLOYMENT BENEFITS	4900	4,800			4,800	8%	0%	(4,800)	-100%
	WORKMAN'S COMPENSATION	4910	5,000			5,000	8%	0%	(5,000)	-100%
---			---	---	---	---	---	---	---	---
11,606	**EMPLOYEE BENEFITS**		**165,535**		**11,606**	**153,929**	**8%**	**7%**	**(26,263)**	**-16%**
---			---	---	---	---	---	---	---	---
40,013	**PERSONAL SERVICES**		**542,694**		**40,013**	**502,681**	**8%**	**7%**	**(62,538)**	**-12%**
	OFFICE SUPPLIES									
578	PAPER	5003	1,800		578	1,222	8%	32%	5,136	285%
35	PRINTED FORMS	5005	1,200		35	1,165	8%	3%	(780)	-65%
683	OTHER EXPENDABLE OFF.S	5010	2,900		683	2,217	8%	24%	5,296	183%
	MINOR OFFICE EQUIP/FUR	5020	1,700			1,700	8%	0%	(1,700)	-100%
216	PHOTO SUPPLIES	5040	500		216	284	8%	43%	2,092	418%
	SUBSCRIPTIONS,MAGS,MAP	5050	500			500	8%	0%	(500)	-100%
57	BOOKS	5070	1,200		57	1,143	8%	5%	(516)	-43%
	COMPUTER SUPPLIES	5080	5,497			5,497	8%	0%	(5,497)	-100%
---			---	---	---	---	---	---	---	---
1,569	**OFFICE SUPPLIES**		**15,297**		**1,569**	**13,728**	**8%**	**10%**	**3,531**	**23%**
	OPERATING SUPPLIES									
	FOOD	5115	450			450	8%	0%	(450)	-100%
72	GAS AND OIL	5250	11,300		72	11,228	8%	1%	(10,436)	-92%
	LUBRICANTS	5255								
	WEARING APPAREL	5355	550			550	8%	0%	(550)	-100%
	MINOR EQUIPMENT	5460	100			100	8%	0%	(100)	-100%

CITY OF HATTIESBURG
001180 - GENERAL FUND-LAND DEVEL.ADM.
EXPENDITURE REPORT
1 Months Ending 10/31/12

THIS MONTH ACTUAL		OBJ/SUB	ANNUAL BUDGET	OPEN PO & CONTRACTS	YTD ACTUAL	REMAINING BALANCE	PERCENT PLAN	PERCENT ACTUAL	....PROJECTED.... OVER/UNDER	%
	OTHER OPERATING MATL/S	5590								
---			---	---	---	---	---	---	---	---
72	**OPERATING SUPPLIES**		**12,400**		**72**	**12,328**	**8%**	**1%**	**(11,536)**	**-93%**
	REPAIR & MAINTENANCE SP									
	BUILDING MATERIALS & S	5600	100			100	8%	0%	(100)	-100%
	PAINT AND PAINTING SPL	5650								
287	MTR VEHICLE REP. PTS/S	5700	3,100		287	2,813	8%	9%	344	11%
	COMMUNICATION REPAIR P	5750	500			500	8%	0%	(500)	-100%
---			---	---	---	---	---	---	---	---
287	**REPAIR & MAINTENANCE**		**3,700**		**287**	**3,413**	**8%**	**8%**	**(256)**	**-7%**
---			---	---	---	---	---	---	---	---
1,927	**SUPPLIES AND EXPENSES**		**31,397**		**1,927**	**29,470**	**8%**	**6%**	**(8,273)**	**-26%**
	_____									
	PROFESSIONAL SERVICES									
	DEMOLITION	6013								
	ASBESTOS REMOVAL	6014	11,000			11,000	8%	0%	(11,000)	-100%
2,550	TITLE OPINIONS	6016	14,000		2,550	11,450	8%	18%	16,600	119%
	LOT CLEARING	6018								
	MEDICAL	6027								
200	OTHER PROFESSIONAL SER	6049	3,000		200	2,800	8%	7%	(600)	-20%
---			---	---	---	---	---	---	---	---
2,750	**PROFESSIONAL SERVICE**		**28,000**		**2,750**	**25,250**	**8%**	**10%**	**5,000**	**18%**
	COMMUNICATIONS									
306	TELEPHONE AND TELEGRAP	6060	4,775		306	4,469	8%	6%	(1,103)	-23%
	POSTAGE	6070	500			500	8%	0%	(500)	-100%
---			---	---	---	---	---	---	---	---
306	**COMMUNICATIONS**		**5,275**		**306**	**4,969**	**8%**	**6%**	**(1,603)**	**-30%**
	TRANSPORTATION									
534	TRAVEL EXPENSE	6110	5,500		534	4,966	8%	10%	908	17%
	FREIGHT	6120								
	MESSENGER/EXPRESS SERV	6130								
---			---	---	---	---	---	---	---	---
534	**TRANSPORTATION**		**5,500**		**534**	**4,966**	**8%**	**10%**	**908**	**17%**
	ADVERTISING									
	ADVERTISING	6150								
---			---	---	---	---	---	---	---	---
	ADVERTISING									

			CITY OF HATTIESBURG							
	001180 - GENERAL FUND-LAND DEVEL.ADM.		EXPENDITURE REPORT							
			1 Months Ending 10/31/12							
THIS MONTH			ANNUAL	OPEN PO	YTD	REMAINING	PERCENT		....PROJECTED....	
ACTUAL		OBJ/SUB	BUDGET	& CONTRACTS	ACTUAL	BALANCE	PLAN	ACTUAL	OVER/UNDER	%
	PRINTING AND BINDING									
	PRINTING	6200								
	FILM PROCESSING	6240								
---			---	---	---	---	---	---	---	---
	PRINTING AND BINDING									
	INSURANCE									
	AUTOMOBILE INSURANCE	6265								
	SURETY AND FORGERY BON	6270								
---			---	---	---	---	---	---	---	---
	INSURANCE									
	REPR/MAINT-OUTSIDE LABO									
	OFFICE EQUIPMENT R&M	6365	1,100			1,100	8%	0%	(1,100)	-100%
	MOTOR VEHICLE EQ. R&M	6384	9,197			9,197	8%	0%	(9,197)	-100%
	COMMUNICATION EQ. R&M	6390	600			600	8%	0%	(600)	-100%
	CLEANING AND PAINTING	6392								
	SIGN PAINTING	6396								
	TOW IN CHARGES	6398	500			500	8%	0%	(500)	-100%
---			---	---	---	---	---	---	---	---
	REPR/MAINT-OUTSIDE L		**11,397**			**11,397**	**8%**	**0%**	**(11,397)**	**-100%**
	RENTALS									
	OTHER RENT	6449								
---			---	---	---	---	---	---	---	---
	RENTALS									
	OTHER SERVICES & CHARGE									
	DUES AND MEMBERSHIPS	6840	2,400			2,400	8%	0%	(2,400)	-100%
638	REGISTRATION FEE/TUITI	6845	3,000		638	2,362	8%	21%	4,656	155%
---			---	---	---	---	---	---	---	---
638	**OTHER SERVICES & CHA**		**5,400**		**638**	**4,762**	**8%**	**12%**	**2,256**	**42%**
---			---	---	---	---	---	---	---	---
4,228	**OTHER SERVICES & CHAR**		**55,572**		**4,228**	**51,344**	**8%**	**8%**	**(4,836)**	**-9%**
	MACHINERY AND EQUIPMENT									
	OFFICE FURN/EQUIP.	7325								
	DATA PROCESSING EQUIP.	7327								
	COMMUNICATION EQUIPMEN	7355								
---			---	---	---	---	---	---	---	---
	MACHINERY AND EQUIPM									

			CITY OF HATTIESBURG							
	001180 - GENERAL FUND-LAND DEVEL.ADM.		EXPENDITURE REPORT							
			1 Months Ending 10/31/12							
THIS MONTH			ANNUAL	OPEN PO	YTD	REMAINING	PERCENT		....PROJECTED....	
ACTUAL		OBJ/SUB	BUDGET	& CONTRACTS	ACTUAL	BALANCE	PLAN	ACTUAL	OVER/UNDER	%
	VEHICLES									
	AUTOMOBILES	7400	42,000			42,000	8%	0%	(42,000)	-100%
	PICK UP TRUCKS	7420								
---			---	---	---	---	---	---	---	---
	VEHICLES		**42,000**			**42,000**	**8%**	**0%**	**(42,000)**	**-100%**
---			---	---	---	---	---	---	---	---
	CAPITAL OUTLAY		**42,000**			**42,000**	**8%**	**0%**	**(42,000)**	**-100%**
---			---	---	---	---	---	---	---	---
46,167	**EXPENDITURES**		**671,663**		**46,167**	**625,496**	**8%**	**7%**	**(117,659)**	**-18%**

			CITY OF HATTIESBURG							
	001190 - GENERAL FUND-P/S CONTRAC.SER		EXPENDITURE REPORT							
			1 Months Ending 10/31/12							
THIS MONTH			ANNUAL	OPEN PO	YTD	REMAINING	PERCENT		....PROJECTED....	
ACTUAL		OBJ/SUB	BUDGET	& CONTRACTS	ACTUAL	BALANCE	PLAN	ACTUAL	OVER/UNDER	%
	SALARIES									
	REGULAR WAGES	4000								
15,637	OVERTIME	4300	130,000		15,637	114,363	8%	12%	57,644	44%
15,637	**SALARIES**		**130,000**		**15,637**	**114,363**	**8%**	**12%**	**57,644**	**44%**
	EMPLOYEE BENEFITS									
2,226	STATE RETIREMENT	4600	18,540		2,226	16,314	8%	12%	8,172	44%
1,133	F.I.C.A. TAXES	4700	9,945		1,133	8,812	8%	11%	3,651	37%
1,560	HOSPITALIZATION INS.	4800	4,455		1,560	2,895	8%	35%	14,265	320%
4,918	**EMPLOYEE BENEFITS**		**32,940**		**4,918**	**28,022**	**8%**	**15%**	**26,076**	**79%**
20,555	**PERSONAL SERVICES**		**162,940**		**20,555**	**142,385**	**8%**	**13%**	**83,720**	**51%**
	PROFESSIONAL SERVICES									
43,456	MEDICAL	6027	150,000		43,456	106,544	8%	29%	371,472	248%
	OTHER PROF.-JAIL DIV G	6048								
43,456	**PROFESSIONAL SERVICE**		**150,000**		**43,456**	**106,544**	**8%**	**29%**	**371,472**	**248%**
	OTHER SERVICES & CHARGE									
96,855	JAIL EXPENSE	6815	1,200,000		96,855	1,103,145	8%	8%	(37,740)	-3%
	DISTRICT ATT'Y SUBSIDY	6816								
	JAIL IMPR-CITY SHARE	6826								
	AMBULANCE SERV.CONTRIB	6860								
	EMERGENCY MGMT.CONTRIB	6865	101,000			101,000	8%	0%	(101,000)	-100%
	USM CITIZEN CORPS COUN	6866								
	USM TITLE V CONTRACT	6867								
11,379	JUVENILLE ACCT.INCENTI	6868	61,445		11,379	50,066	8%	19%	75,103	122%
	METH GRANT CONTRACT	6869								
	SERVICES NOT SPECIFIED	6999								
108,233	**OTHER SERVICES & CHA**		**1,362,445**		**108,233**	**1,254,212**	**8%**	**8%**	**(63,649)**	**-5%**
151,690	**OTHER SERVICES & CHAR**		**1,512,445**		**151,690**	**1,360,755**	**8%**	**10%**	**307,835**	**20%**

			CITY OF HATTIESBURG							
	001190 - GENERAL FUND-P/S CONTRAC.SER		EXPENDITURE REPORT							
			1 Months Ending 10/31/12							
THIS MONTH			ANNUAL	OPEN PO	YTD	REMAINING	PERCENT		....PROJECTED....	
ACTUAL		OBJ/SUB	BUDGET	& CONTRACTS	ACTUAL	BALANCE	PLAN	ACTUAL	OVER/UNDER	%
	VEHICLES									
	AUTOMOBILES	7400								
---			---	---	---	---	---	---	---	---
	VEHICLES									
---			---	---	---	---	---	---	---	---
	CAPITAL OUTLAY									
---			---	---	---	---	---	---	---	---
172,245	**EXPENDITURES**		**1,675,385**		**172,245**	**1,503,140**	**8%**	**10%**	**391,555**	**23%**

CITY OF HATTIESBURG
001191 - GENERAL FUND-TRAFFIC MAINT.
EXPENDITURE REPORT
1 Months Ending 10/31/12

THIS MONTH ACTUAL		OBJ/SUB	ANNUAL BUDGET	OPEN PO & CONTRACTS	YTD ACTUAL	REMAINING BALANCE	PERCENT PLAN	PERCENT ACTUAL	....PROJECTED.... OVER/UNDER	%
	SALARIES									
15,749	REGULAR WAGES	4000	236,975		15,749	221,226	8%	7%	(47,987)	-20%
	DISASTER RECOVERY WAGE	4010								
1,649	OVERTIME	4300	10,000		1,649	8,351	8%	16%	9,788	98%
	DISASTER RECOVERY OVER	4310								
17,398	**SALARIES**		**246,975**		**17,398**	**229,577**	**8%**	**7%**	**(38,199)**	**-15%**
	EMPLOYEE BENEFITS									
2,481	STATE RETIREMENT	4600	35,230		2,481	32,749	8%	7%	(5,458)	-15%
1,291	F.I.C.A. TAXES	4700	18,900		1,291	17,609	8%	7%	(3,408)	-18%
3,104	HOSPITALIZATION INS.	4800	46,980		3,104	43,876	8%	7%	(9,732)	-21%
	UNEMPLOYMENT BENEFITS	4900								
	WORKMAN'S COMPENSATION	4910	12,875			12,875	8%	0%	(12,875)	-100%
6,876	**EMPLOYEE BENEFITS**		**113,985**		**6,876**	**107,109**	**8%**	**6%**	**(31,473)**	**-28%**
24,274	**PERSONAL SERVICES**		**360,960**		**24,274**	**336,686**	**8%**	**7%**	**(69,672)**	**-19%**
	OFFICE SUPPLIES									
	PAPER	5003								
	PRINTED FORMS	5005								
	OTHER EXPENDABLE OFF.S	5010	1,800			1,800	8%	0%	(1,800)	-100%
	MINOR OFFICE EQUIP/FUR	5020	33			33	8%	0%	(33)	-100%
	PHOTO SUPPLIES	5040								
	SUBSCRIPTIONS,MAGS,MAP	5050								
285	BOOKS	5070	500		285	215	8%	57%	2,920	584%
	COMPUTER SUPPLIES	5080	682			682	8%	0%	(682)	-100%
285	**OFFICE SUPPLIES**		**3,015**		**285**	**2,730**	**8%**	**9%**	**405**	**13%**
	OPERATING SUPPLIES									
	CLEANING/JANITORIAL SP	5100	150			150	8%	0%	(150)	-100%
	HOUSEHOLD SUPPLIES	5110	1,350			1,350	8%	0%	(1,350)	-100%
	FOOD	5115								
	MEDICAL SUPPLIES	5120	50			50	8%	0%	(50)	-100%
	CHEMICALS	5130	600			600	8%	0%	(600)	-100%

CITY OF HATTIESBURG
001191 - GENERAL FUND-TRAFFIC MAINT.
EXPENDITURE REPORT
1 Months Ending 10/31/12

THIS MONTH ACTUAL		OBJ/SUB	ANNUAL BUDGET	OPEN PO & CONTRACTS	YTD ACTUAL	REMAINING BALANCE	PERCENT PLAN	PERCENT ACTUAL	....PROJECTED.... OVER/UNDER	%
	GAS AND OIL	5250	28,000			28,000	8%	0%	(28,000)	-100%
	LUBRICANTS	5255	100			100	8%	0%	(100)	-100%
	DIESEL FUEL	5257	2,000			2,000	8%	0%	(2,000)	-100%
	WEARING APPAREL	5355	600			600	8%	0%	(600)	-100%
	ASPHALT & ASPHALT PROD	5400								
	CONCRETE, CEMENT, ETC.	5405	1,000			1,000	8%	0%	(1,000)	-100%
	SAND,CLAY,GRVL,FILL DI	5415								
	HORT./LANDSCAPING SPLY	5440								
	HAND TOOLS	5450	2,300			2,300	8%	0%	(2,300)	-100%
681	MINOR EQUIPMENT	5460	13,000		681	12,319	8%	5%	(4,828)	-37%
1,333	TRAFFIC CONTROL EQ. SP	5540	40,549		1,333	39,216	8%	3%	(24,553)	-61%
	TRAFFIC SIGNS	5545	20,000	337		19,663	8%	0%	(20,000)	-100%
	STREET MARKING SUPPLIE	5550	2,800			2,800	8%	0%	(2,800)	-100%
55	OTHER OPERATING MATL/S	5590	150		55	95	8%	37%	510	340%
---			---	---	---	---	---	---	---	---
2,068	**OPERATING SUPPLIES**		**112,649**	**337**	**2,068**	**110,244**	**8%**	**2%**	**(87,833)**	**-78%**
	REPAIR & MAINTENANCE SP									
(190)	BUILDING MATERIALS & S	5600	3,000		190-	3,190	8%	6%	(720)	-24%
	ELECTRICAL SUPPLIES	5605	4,000			4,000	8%	0%	(4,000)	-100%
	STRUCTURAL STEEL & IRO	5620	1,500			1,500	8%	0%	(1,500)	-100%
1,050	PAINT AND PAINTING SPL	5650	7,880		1,050	6,830	8%	13%	4,720	60%
23	MTR VEHICLE REP. PTS/S	5700	4,000		23	3,977	8%	1%	(3,724)	-93%
	COMMUNICATION REPAIR P	5750	1,000			1,000	8%	0%	(1,000)	-100%
	OTHER REPAIR/MAINT. SP	5990	500			500	8%	0%	(500)	-100%
---			---	---	---	---	---	---	---	---
883	**REPAIR & MAINTENANCE**		**21,880**		**883**	**20,997**	**8%**	**4%**	**(11,284)**	**-52%**
---			---	---	---	---	---	---	---	---
3,236	**SUPPLIES AND EXPENSES**		**137,544**	**337**	**3,236**	**133,971**	**8%**	**2%**	**(98,712)**	**-72%**
	PROFESSIONAL SERVICES									
	MEDICAL	6027								
---			---	---	---	---	---	---	---	---
	PROFESSIONAL SERVICE									
	COMMUNICATIONS									
50	TELEPHONE AND TELEGRAP	6060	1,000		50	950	8%	5%	(400)	-40%
	POSTAGE	6070								
---			---	---	---	---	---	---	---	---

CITY OF HATTIESBURG
001191 - GENERAL FUND-TRAFFIC MAINT.
EXPENDITURE REPORT
1 Months Ending 10/31/12

THIS MONTH ACTUAL		OBJ/SUB	ANNUAL BUDGET	OPEN PO & CONTRACTS	YTD ACTUAL	REMAINING BALANCE	PERCENT PLAN	PERCENT ACTUAL	....PROJECTED.... OVER/UNDER	%
50	**COMMUNICATIONS**		**1,000**		**50**	**950**	**8%**	**5%**	**(400)**	**-40%**
	TRANSPORTATION									
	TRAVEL EXPENSE	6110	2,042			2,042	8%	0%	(2,042)	-100%
	FREIGHT	6120	150			150	8%	0%	(150)	-100%
	MESSENGER/EXPRESS SERV	6130								
---			---	---	---	---	---	---	---	---
	TRANSPORTATION		**2,192**			**2,192**	**8%**	**0%**	**(2,192)**	**-100%**
	ADVERTISING									
	ADVERTISING	6150								
---			---	---	---	---	---	---	---	---
	ADVERTISING									
	INSURANCE									
	PUBLIC LIAB/PROPERTY D	6255								
	AUTOMOBILE INSURANCE	6265								
	SURETY AND FORGERY BON	6270								
---			---	---	---	---	---	---	---	---
	INSURANCE									
	UTILITIES									
24	GAS	6300	2,000		24	1,976	8%	1%	(1,712)	-86%
1,211	ELECTRICITY	6305	14,000		1,211	12,789	8%	9%	532	4%
	TRAFFIC LIGHT ELECTRIC	6310								
---			---	---	---	---	---	---	---	---
1,235	**UTILITIES**		**16,000**		**1,235**	**14,765**	**8%**	**8%**	**(1,180)**	**-7%**
	REPR/MAINT-OUTSIDE LABO									
	BUILDING R&M	6350	3,650			3,650	8%	0%	(3,650)	-100%
	STREETS & STRUCTURES R	6360	135			135	8%	0%	(135)	-100%
	OFFICE EQUIPMENT R&M	6365	500			500	8%	0%	(500)	-100%
	TRAFFIC CONTROL EQ. R&	6375	500			500	8%	0%	(500)	-100%
	FIXED EQUIPMENT R&M	6380								
99	MINOR EQUIPMENT R&M	6382	450		99	351	8%	22%	738	164%
717	MOTOR VEHICLE EQ. R&M	6384	12,000		717	11,283	8%	6%	(3,396)	-28%
	COMMUNICATION EQ. R&M	6390	1,350			1,350	8%	0%	(1,350)	-100%
	DISINFECT./EXTERMINATI	6394	614			614	8%	0%	(614)	-100%
	SIGN PAINTING	6396	150			150	8%	0%	(150)	-100%
	TOW IN CHARGES	6398	200			200	8%	0%	(200)	-100%
	OTHER REPAIRS AND MAIN	6399	51			51	8%	0%	(51)	-100%
---			---	---	---	---	---	---	---	---

CITY OF HATTIESBURG
001191 - GENERAL FUND-TRAFFIC MAINT.
EXPENDITURE REPORT
1 Months Ending 10/31/12

THIS MONTH ACTUAL		OBJ/SUB	ANNUAL BUDGET	OPEN PO & CONTRACTS	YTD ACTUAL	REMAINING BALANCE	PERCENT PLAN	PERCENT ACTUAL	....PROJECTED.... OVER/UNDER	%
816	**REPR/MAINT-OUTSIDE L**		**19,600**		**816**	**18,784**	**8%**	**4%**	**(9,808)**	**-50%**
	RENTALS									
	MACHINERY RENT	6420								
	CYLINDER RENT	6425								
96	UNIFORM RENT	6430	950		96	854	8%	10%	202	21%
	MOP-MAT-RAG RENT	6435								
	OTHER RENT	6449	750			750	8%	0%	(750)	-100%
---			---	---	---	---	---	---	---	---
96	**RENTALS**		**1,700**		**96**	**1,604**	**8%**	**6%**	**(548)**	**-32%**
	OTHER SERVICES & CHARGE									
255	DUES AND MEMBERSHIPS	6840	1,000		255	745	8%	26%	2,060	206%
	REGISTRATION FEE/TUITI	6845	3,000			3,000	8%	0%	(3,000)	-100%
	LAUNDRY	6850								
	SERVICES NOT SPECIFIED	6999								
---			---	---	---	---	---	---	---	---
255	**OTHER SERVICES & CHA**		**4,000**		**255**	**3,745**	**8%**	**6%**	**(940)**	**-24%**
---			---	---	---	---	---	---	---	---
2,452	**OTHER SERVICES & CHAR**		**44,492**		**2,452**	**42,040**	**8%**	**6%**	**(15,068)**	**-34%**
	_____									
	BUILDING/BLD IMPROVEMEN									
	BUILDING IMPROVEMENTS	7150								
	RENOVATE WALNUT ST.BL	7150 22								
	TRAFFIC SHOP IMPROVEM	7150 32								
---			---	---	---	---	---	---	---	---
	BUILDING IMPROVEMEN									
---			---	---	---	---	---	---	---	---
	BUILDING/BLD IMPROVE									
	MACHINERY AND EQUIPMENT									
	HOUSEHOLD FURN/EQUIP.	7320								
	OFFICE FURN/EQUIP.	7325								
	DATA PROCESSING EQUIP.	7327	3,500			3,500	8%	0%	(3,500)	-100%
	COMMUNICATION EQUIPMEN	7355	3,050			3,050	8%	0%	(3,050)	-100%
	TRAFFIC CONTROL EQUIP.	7360	18,000			18,000	8%	0%	(18,000)	-100%
	OTHER EQUIPMENT	7399	13,000			13,000	8%	0%	(13,000)	-100%
---			---	---	---	---	---	---	---	---
	MACHINERY AND EQUIPM		**37,550**			**37,550**	**8%**	**0%**	**(37,550)**	**-100%**
	VEHICLES									

			CITY OF HATTIESBURG							
	001191 - GENERAL FUND-TRAFFIC MAINT.		EXPENDITURE REPORT							
			1 Months Ending 10/31/12							
THIS MONTH			ANNUAL	OPEN PO	YTD	REMAINING	PERCENT		....PROJECTED....	
ACTUAL		OBJ/SUB	BUDGET	& CONTRACTS	ACTUAL	BALANCE	PLAN	ACTUAL	OVER/UNDER	%
	AUTOMOBILES	7400								
	PICK UP TRUCKS	7420								
	HEAVY TRUCKS	7430								
	SPECIAL TRUCKS	7450		85,173		(85,173)				
---			---	---	---	---	---	---	---	---
	VEHICLES			**85,173**		**(85,173)**				
---			---	---	---	---	---	---	---	---
	CAPITAL OUTLAY		**37,550**	**85,173**		**(47,623)**	**8%**	**0%**	**(37,550)**	**-100%**
---			---	---	---	---	---	---	---	---
29,962	**EXPENDITURES**		**580,546**	**85,510**	**29,962**	**465,074**	**8%**	**5%**	**(221,002)**	**-38%**

CITY OF HATTIESBURG
001201 - GENERAL FUND-STREET DIV.
EXPENDITURE REPORT
1 Months Ending 10/31/12

THIS MONTH ACTUAL		OBJ/SUB	ANNUAL BUDGET	OPEN PO & CONTRACTS	YTD ACTUAL	REMAINING BALANCE	PERCENT PLAN	PERCENT ACTUAL	....PROJECTED.... OVER/UNDER	%
	SALARIES									
68,184	REGULAR WAGES	4000	1,108,758		68,184	1,040,574	8%	6%	(290,550)	-26%
93	DISASTER RECOVERY WAGE	4010			93	(93)			1,116	
2,380	OVERTIME	4300	20,000		2,380	17,620	8%	12%	8,560	43%
	DISASTER RECOVERY OVER	4310								
70,657	**SALARIES**		**1,128,758**		**70,657**	**1,058,101**	**8%**	**6%**	**(280,874)**	**-25%**
	EMPLOYEE BENEFITS									
10,076	STATE RETIREMENT	4600	160,965		10,076	150,889	8%	6%	(40,053)	-25%
5,335	F.I.C.A. TAXES	4700	86,352		5,335	81,017	8%	6%	(22,332)	-26%
13,585	HOSPITALIZATION INS.	4800	261,000		13,585	247,415	8%	5%	(97,980)	-38%
	UNEMPLOYMENT BENEFITS	4900	2,100			2,100	8%	0%	(2,100)	-100%
	WORKMAN'S COMPENSATION	4910	50,000			50,000	8%	0%	(50,000)	-100%
28,996	**EMPLOYEE BENEFITS**		**560,417**		**28,996**	**531,421**	**8%**	**5%**	**(212,465)**	**-38%**
99,652	**PERSONAL SERVICES**		**1,689,175**		**99,652**	**1,589,523**	**8%**	**6%**	**(493,351)**	**-29%**
	OFFICE SUPPLIES									
	PAPER	5003								
	PRINTED FORMS	5005								
146	OTHER EXPENDABLE OFF.S	5010	200		146	54	8%	73%	1,552	776%
	MINOR OFFICE EQUIP/FUR	5020								
	SUBSCRIPTIONS,MAGS,MAP	5050								
146	**OFFICE SUPPLIES**		**200**		**146**	**54**	**8%**	**73%**	**1,552**	**776%**
	OPERATING SUPPLIES									
168	CLEANING/JANITORIAL SP	5100	2,000		168	1,832	8%	8%	16	1%
	HOUSEHOLD SUPPLIES	5110	3,500			3,500	8%	0%	(3,500)	-100%
	FOOD	5115								
	MEDICAL SUPPLIES	5120								
	CHEMICALS	5130	1,500			1,500	8%	0%	(1,500)	-100%
2,542	GAS AND OIL	5250	70,000		2,542	67,458	8%	4%	(39,496)	-56%
	LUBRICANTS	5255	5,000			5,000	8%	0%	(5,000)	-100%
	DIESEL FUEL	5257	94,000			94,000	8%	0%	(94,000)	-100%

CITY OF HATTIESBURG
001201 - GENERAL FUND-STREET DIV.
EXPENDITURE REPORT
1 Months Ending 10/31/12

THIS MONTH ACTUAL		OBJ/SUB	ANNUAL BUDGET	OPEN PO & CONTRACTS	YTD ACTUAL	REMAINING BALANCE	PERCENT PLAN	PERCENT ACTUAL	....PROJECTED.... OVER/UNDER	%
	WEARING APPAREL	5355	2,600			2,600	8%	0%	(2,600)	-100%
	ASPHALT & ASPHALT PROD	5400	8,000			8,000	8%	0%	(8,000)	-100%
641	CONCRETE, CEMENT, ETC.	5405	42,050	3,925	641	37,484	8%	2%	(34,358)	-82%
	BRICK,STONE,MORTAR,ETC	5410	6,000	2,700		3,300	8%	0%	(6,000)	-100%
3,500	SAND,CLAY,GRVL,FILL DI	5415	50,000		3,500	46,500	8%	7%	(8,000)	-16%
	DRAINAGE PIPE & CULVER	5420	12,000			12,000	8%	0%	(12,000)	-100%
360	HORT./LANDSCAPING SPLY	5440	10,000		360	9,640	8%	4%	(5,680)	-57%
	HAND TOOLS	5450	3,000			3,000	8%	0%	(3,000)	-100%
40	MINOR EQUIPMENT	5460	7,500		40	7,460	8%	1%	(7,020)	-94%
	STREET MARKING SUPPLIE	5550								
1,109	OTHER OPERATING MATL/S	5590	7,500	200	1,109	6,191	8%	15%	5,808	77%
---			---	---	---	---	---	---	---	---
8,361	**OPERATING SUPPLIES**		**324,650**	**6,825**	**8,361**	**309,464**	**8%**	**3%**	**(224,318)**	**-69%**
	REPAIR & MAINTENANCE SP									
	BUILDING MATERIALS & S	5600	23,000			23,000	8%	0%	(23,000)	-100%
	ELECTRICAL SUPPLIES	5605	7,500			7,500	8%	0%	(7,500)	-100%
67	PLUMBING SUPPLIES	5610	1,000		67	933	8%	7%	(196)	-20%
1,038	STRUCTURAL STEEL & IRO	5620	8,500		1,038	7,462	8%	12%	3,956	47%
	PAINT AND PAINTING SPL	5650	8,700			8,700	8%	0%	(8,700)	-100%
7,910	MTR VEHICLE REP. PTS/S	5700	85,000	1,674	7,910	75,416	8%	9%	9,920	12%
80	COMMUNICATION REPAIR P	5750	1,000		80	920	8%	8%	(40)	-4%
	AGRICLTRL REPAIR PTS/S	5755	6,000			6,000	8%	0%	(6,000)	-100%
	OTHER REPAIR/MAINT. SP	5990	700			700	8%	0%	(700)	-100%
---			---	---	---	---	---	---	---	---
9,094	**REPAIR & MAINTENANCE**		**141,400**	**1,674**	**9,094**	**130,632**	**8%**	**6%**	**(32,272)**	**-23%**
---			---	---	---	---	---	---	---	---
17,601	**SUPPLIES AND EXPENSES**		**466,250**	**8,499**	**17,601**	**440,150**	**8%**	**4%**	**(255,038)**	**-55%**
	_____									
	PROFESSIONAL SERVICES									
	LOT CLEARING	6018								
	MEDICAL	6027								
12,516	OTHER PROFESSIONAL SER	6049	45,000		12,516	32,484	8%	28%	105,192	234%
---			---	---	---	---	---	---	---	---
12,516	**PROFESSIONAL SERVICE**		**45,000**		**12,516**	**32,484**	**8%**	**28%**	**105,192**	**234%**
	TRANSPORTATION									
	TRAVEL EXPENSE	6110	4,285			4,285	8%	0%	(4,285)	-100%
	FREIGHT	6120								

			CITY OF HATTIESBURG							
	001201 - GENERAL FUND-STREET DIV.		EXPENDITURE REPORT							
			1 Months Ending 10/31/12							
THIS MONTH			ANNUAL	OPEN PO	YTD	REMAINING	PERCENT		....PROJECTED....	
ACTUAL		OBJ/SUB	BUDGET	& CONTRACTS	ACTUAL	BALANCE	PLAN	ACTUAL	OVER/UNDER	%
	MESSENGER/EXPRESS SERV	6130								
---			---	---	---	---	---	---	---	---
	TRANSPORTATION		**4,285**			**4,285**	**8%**	**0%**	**(4,285)**	**-100%**
	ADVERTISING									
	ADVERTISING	6150								
---			---	---	---	---	---	---	---	---
	ADVERTISING									
	PRINTING AND BINDING									
	PRINTING	6200								
---			---	---	---	---	---	---	---	---
	PRINTING AND BINDING									
	INSURANCE									
	PUBLIC LIAB/PROPERTY D	6255								
	AUTOMOBILE INSURANCE	6265								
---			---	---	---	---	---	---	---	---
	INSURANCE									
	UTILITIES									
	ELECTRICITY	6305								
---			---	---	---	---	---	---	---	---
	UTILITIES									
	REPR/MAINT-OUTSIDE LABO									
	BUILDING R&M	6350								
	ELECTRICAL R&M	6355								
	PLUMBING EQUIPMENT R&M	6357								
	STREETS & STRUCTURES R	6360								
	MISC PAVING	6360 01								
	VENETIAN WAY AREA	6360 02								
	S 27TH/O'FERRELL AREA	6360 03								
	W 4TH-COLUMBIA ST ARE	6360 04								
	MCINNIS LOOP/CAMBRIDG	6360 05								
	DABBS ST/MLK AREA	6360 06								
	S 40TH/BONHOMIE	6360 07								
	STANLEY/HWY 42 AREA	6360 08								
	PINE HILLS/SANDLEWOOD	6360 09								
	N 35TH/USM AREA	6360 10								
	S 36TH/MAMIE ST AREA	6360 11								
	S 34TH/MANDALAY AREA	6360 12								

			CITY OF HATTIESBURG							
	001201 - GENERAL FUND-STREET DIV.		EXPENDITURE REPORT							
			1 Months Ending 10/31/12							
THIS MONTH			ANNUAL	OPEN PO	YTD	REMAINING	PERCENT		....PROJECTED....	
ACTUAL		OBJ/SUB	BUDGET	& CONTRACTS	ACTUAL	BALANCE	PLAN	ACTUAL	OVER/UNDER	%
	S H'BURG/S CHANCELLOR	6360 13								
	BROAD ST/CAPITAL ST A	6360 14								
	MOBILE/BOUIE ST AREA	6360 15								
	CHALMETTE/WINDGATE	6360 16								
	HONEYSUCKLE/DOGWOOD	6360 17								
	ADELINE/S 16TH AREA	6360 18								
	DUMAS/FLORENCE ST ARE	6360 19								
	S 16TH/CORRINE ST ARE	6360 20								
	ACADEMY DR-BLC AIRPOR	6360 21								
	COTTAGES AT TURTLE CR	6360 22								
	CLASSIC DR/J ED TURNE	6360 23								
	E 5TH ST/E 6TH ST ARE	6360 24								
	HALL/ELIZABETH AVE	6360 25								
	MANDALAY/HILLENDALE	6360 26								
	ARLINGTON LOOP/S 34TH	6360 27								
	N. 31st Ave/HILLSIDE	6360 28								
	DWNTWN AREA VAR STS &	6360 29								
	LONG RANGE PAVING PLA	6360 99								
---			---	---	---	---	---	---	---	---
	STREETS & STRUCTURE									
	FIXED EQUIPMENT R&M	6380	1,000			1,000	8%	0%	(1,000)	-100%
	MINOR EQUIPMENT R&M	6382	1,500			1,500	8%	0%	(1,500)	-100%
4,149	MOTOR VEHICLE EQ. R&M	6384	90,000	1,272	4,149	84,579	8%	5%	(40,212)	-45%
	AGRICULTURAL EQ. R&M	6387								
	COMMUNICATION EQ. R&M	6390								
	SIGN PAINTING	6396								
	TOW IN CHARGES	6398	700			700	8%	0%	(700)	-100%
	OTHER REPAIRS AND MAIN	6399	500			500	8%	0%	(500)	-100%
---			---	---	---	---	---	---	---	---
4,149	**REPR/MAINT-OUTSIDE L**		**93,700**	**1,272**	**4,149**	**88,279**	**8%**	**4%**	**(43,912)**	**-47%**
	RENTALS									
	AUTOMOTIVE EQ. RENT	6415								
	MACHINERY RENT	6420	74,000			74,000	8%	0%	(74,000)	-100%
560	UNIFORM RENT	6430	5,471		560	4,911	8%	10%	1,249	23%
	OTHER RENT	6449	7,000			7,000	8%	0%	(7,000)	-100%
---			---	---	---	---	---	---	---	---
560	**RENTALS**		**86,471**		**560**	**85,911**	**8%**	**1%**	**(79,751)**	**-92%**

CITY OF HATTIESBURG
001201 - GENERAL FUND-STREET DIV.
EXPENDITURE REPORT
1 Months Ending 10/31/12

THIS MONTH ACTUAL		OBJ/SUB	ANNUAL BUDGET	OPEN PO & CONTRACTS	YTD ACTUAL	REMAINING BALANCE	PERCENT PLAN	PERCENT ACTUAL	....PROJECTED.... OVER/UNDER	%
	OTHER SERVICES & CHARGE									
	DUES AND MEMBERSHIPS	6840								
600	REGISTRATION FEE/TUITI	6845	4,500		600	3,900	8%	13%	2,700	60%
	SERVICES NOT SPECIFIED	6999								
---			---	---	---	---	---	---	---	---
600	**OTHER SERVICES & CHA**		**4,500**		**600**	**3,900**	**8%**	**13%**	**2,700**	**60%**
---			---	---	---	---	---	---	---	---
17,825	**OTHER SERVICES & CHAR**		**233,956**	**1,272**	**17,825**	**214,859**	**8%**	**8%**	**(20,056)**	**-9%**
	IMPROVEMENT OTHER THAN									
	BRIDGES	7210								
	SEWERS	7220								
	IND.PARK WTR/SWR IMPR	7220 03								
---			---	---	---	---	---	---	---	---
	SEWERS									
	B/WAY, E. HARDY-SBA	7223								
	KAB/LANDSCAPING	7226								
	STREETS & ROADWAYS	7230								
	INDUSTRIAL PARK ROADS	7230 02								
	W.4TH-HWY 49 TO 38TH	7230 15								
	HARDY ST-MCLEOD TO 25	7230 16								
	OTHER STREET IMPR.	7230 99								
---			---	---	---	---	---	---	---	---
	STREETS & ROADWAYS									
	OTHER IMPROVEMENTS	7295								
---			---	---	---	---	---	---	---	---
	IMPROVEMENT OTHER TH									
	MACHINERY AND EQUIPMENT									
	HOUSEHOLD FURN/EQUIP.	7320								
	CONSTRUCTION EQUIPMENT	7345								
	COMMUNICATION EQUIPMEN	7355								
	PIPE	7370								
	OTHER EQUIPMENT	7399								
---			---	---	---	---	---	---	---	---
	MACHINERY AND EQUIPM									
	VEHICLES									
	AUTOMOBILES	7400								

			CITY OF HATTIESBURG							
	001201 - GENERAL FUND-STREET DIV.		EXPENDITURE REPORT							
			1 Months Ending 10/31/12							
THIS MONTH			ANNUAL	OPEN PO	YTD	REMAINING	PERCENT		....PROJECTED....	
ACTUAL		OBJ/SUB	BUDGET	& CONTRACTS	ACTUAL	BALANCE	PLAN	ACTUAL	OVER/UNDER	%
	PICK UP TRUCKS	7420								
	HEAVY TRUCKS	7430								
	DUMP TRUCKS	7440								
	SPECIAL TRUCKS	7450								
---			---	---	---	---	---	---	---	---
	VEHICLES									
---			---	---	---	---	---	---	---	---
	CAPITAL OUTLAY									
---			---	---	---	---	---	---	---	---
135,078	**EXPENDITURES**		**2,389,381**	**9,771**	**135,078**	**2,244,532**	**8%**	**6%**	**(768,445)**	**-32%**

			CITY OF HATTIESBURG							
	001202 - GENERAL FUND-STREET LIGHTS		EXPENDITURE REPORT							
			1 Months Ending 10/31/12							
THIS MONTH			ANNUAL	OPEN PO	YTD	REMAINING	PERCENT		....PROJECTED....	
ACTUAL		OBJ/SUB	BUDGET	& CONTRACTS	ACTUAL	BALANCE	PLAN	ACTUAL	OVER/UNDER	%
	_____									
	_____									
	UTILITIES									
86,988	ELECTRICITY	6305	1,100,000		86,988	1,013,012	8%	8%	(56,144)	-5%
---			---	---	---	---	---	---	---	---
86,988	**UTILITIES**		**1,100,000**		**86,988**	**1,013,012**	**8%**	**8%**	**(56,144)**	**-5%**
---			---	---	---	---	---	---	---	---
86,988	**OTHER SERVICES & CHAR**		**1,100,000**		**86,988**	**1,013,012**	**8%**	**8%**	**(56,144)**	**-5%**
	_____									
	IMPROVEMENT OTHER THAN									
	STREET LIGHTING	7235								
---			---	---	---	---	---	---	---	---
	IMPROVEMENT OTHER TH									
---			---	---	---	---	---	---	---	---
	CAPITAL OUTLAY									
---			---	---	---	---	---	---	---	---
86,988	**EXPENDITURES**		**1,100,000**		**86,988**	**1,013,012**	**8%**	**8%**	**(56,144)**	**-5%**

CITY OF HATTIESBURG
001203 - GENERAL FUND-ENGR/PUBLIC SER
EXPENDITURE REPORT
1 Months Ending 10/31/12

THIS MONTH ACTUAL		OBJ/SUB	ANNUAL BUDGET	OPEN PO & CONTRACTS	YTD ACTUAL	REMAINING BALANCE	PERCENT PLAN	PERCENT ACTUAL	....PROJECTED.... OVER/UNDER	%
	SALARIES									
18,244	REGULAR WAGES	4000	237,170		18,244	218,926	8%	8%	(18,242)	-8%
	DISASTER RECOVERY WAGE	4010								
	OVERTIME	4300								
	DISASTER RECOVERY OVER	4310								
18,244	**SALARIES**		**237,170**		**18,244**	**218,926**	**8%**	**8%**	**(18,242)**	**-8%**
	EMPLOYEE BENEFITS									
2,602	STATE RETIREMENT	4600	33,820		2,602	31,218	8%	8%	(2,596)	-8%
1,319	F.I.C.A. TAXES	4700	18,150		1,319	16,831	8%	7%	(2,322)	-13%
2,328	HOSPITALIZATION INS.	4800	36,540		2,328	34,212	8%	6%	(8,604)	-24%
	UNEMPLOYMENT BENEFITS	4900								
	WORKMAN'S COMPENSATION	4910	13,900			13,900	8%	0%	(13,900)	-100%
6,248	**EMPLOYEE BENEFITS**		**102,410**		**6,248**	**96,162**	**8%**	**6%**	**(27,434)**	**-27%**
24,492	**PERSONAL SERVICES**		**339,580**		**24,492**	**315,088**	**8%**	**7%**	**(45,676)**	**-13%**
	OFFICE SUPPLIES									
	PAPER	5003	500			500	8%	0%	(500)	-100%
	PRINTED FORMS	5005								
	OTHER EXPENDABLE OFF.S	5010	3,459			3,459	8%	0%	(3,459)	-100%
	MINOR OFFICE EQUIP/FUR	5020	1,200			1,200	8%	0%	(1,200)	-100%
	PHOTO SUPPLIES	5040								
240	SUBSCRIPTIONS,MAGS,MAP	5050	241		240	1	8%	100%	2,639	95%
	MAPS FOR RESALE	5060								
	BOOKS	5070	500			500	8%	0%	(500)	-100%
	COMPUTER SUPPLIES	5080	1,500			1,500	8%	0%	(1,500)	-100%
240	**OFFICE SUPPLIES**		**7,400**		**240**	**7,160**	**8%**	**3%**	**(4,520)**	**-61%**
	OPERATING SUPPLIES									
	FOOD	5115	200			200	8%	0%	(200)	-100%
	MEDICAL SUPPLIES	5120								
	GAS AND OIL	5250	3,800			3,800	8%	0%	(3,800)	-100%
	LUBRICANTS	5255								

CITY OF HATTIESBURG
001203 - GENERAL FUND-ENGR/PUBLIC SER
EXPENDITURE REPORT
1 Months Ending 10/31/12

THIS MONTH ACTUAL		OBJ/SUB	ANNUAL BUDGET	OPEN PO & CONTRACTS	YTD ACTUAL	REMAINING BALANCE	PERCENT PLAN	PERCENT ACTUAL	....PROJECTED.... OVER/UNDER	%
	WEARING APPAREL	5355	100			100	8%	0%	(100)	-100%
	HORT./LANDSCAPING SPLY	5440								
	MINOR EQUIPMENT	5460	3,300			3,300	8%	0%	(3,300)	-100%
66	OTHER OPERATING MATL/S	5590	750		66	684	8%	9%	42	6%
---			---	---	---	---	---	---	---	---
66	**OPERATING SUPPLIES**		**8,150**		**66**	**8,084**	**8%**	**1%**	**(7,358)**	**-90%**
	REPAIR & MAINTENANCE SP									
	BUILDING MATERIALS & S	5600	1,500			1,500	8%	0%	(1,500)	-100%
	ELECTRICAL SUPPLIES	5605	500			500	8%	0%	(500)	-100%
	PAINT AND PAINTING SPL	5650								
	MTR VEHICLE REP. PTS/S	5700	1,500			1,500	8%	0%	(1,500)	-100%
	COMMUNICATION REPAIR P	5750	150			150	8%	0%	(150)	-100%
	OTHER REPAIR/MAINT. SP	5990								
---			---	---	---	---	---	---	---	---
	REPAIR & MAINTENANCE		**3,650**			**3,650**	**8%**	**0%**	**(3,650)**	**-100%**
---			---	---	---	---	---	---	---	---
306	**SUPPLIES AND EXPENSES**		**19,200**		**306**	**18,894**	**8%**	**2%**	**(15,528)**	**-81%**
	PROFESSIONAL SERVICES									
8,859	ENGINEERING	6015	95,000		8,859	86,141	8%	9%	11,308	12%
	CONSULTANT SERV/SURVEY	6020	70,000			70,000	8%	0%	(70,000)	-100%
	ABSTRACTING & RECORDIN	6023								
715	OTHER PROFESSIONAL SER	6049	68,000		715	67,285	8%	1%	(59,420)	-87%
---			---	---	---	---	---	---	---	---
9,574	**PROFESSIONAL SERVICE**		**233,000**		**9,574**	**223,426**	**8%**	**4%**	**(118,112)**	**-51%**
	COMMUNICATIONS									
91	TELEPHONE AND TELEGRAP	6060	1,200		91	1,109	8%	8%	(108)	-9%
	POSTAGE	6070								
---			---	---	---	---	---	---	---	---
91	**COMMUNICATIONS**		**1,200**		**91**	**1,109**	**8%**	**8%**	**(108)**	**-9%**
	TRANSPORTATION									
6	TRAVEL EXPENSE	6110	3,000		6	2,994	8%	0%	(2,928)	-98%
82	FREIGHT	6120	300		82	218	8%	27%	684	228%
	MESSENGER/EXPRESS SERV	6130								
---			---	---	---	---	---	---	---	---
88	**TRANSPORTATION**		**3,300**		**88**	**3,212**	**8%**	**3%**	**(2,244)**	**-68%**
	ADVERTISING									

CITY OF HATTIESBURG
001203 - GENERAL FUND-ENGR/PUBLIC SER
EXPENDITURE REPORT
1 Months Ending 10/31/12

THIS MONTH ACTUAL		OBJ/SUB	ANNUAL BUDGET	OPEN PO & CONTRACTS	YTD ACTUAL	REMAINING BALANCE	PERCENT PLAN	PERCENT ACTUAL	....PROJECTED.... OVER/UNDER	%
	ADVERTISING	6150								
---			---	---	---	---	---	---	---	---
	ADVERTISING									
	PRINTING AND BINDING									
	PRINTING	6200								
	BLUELINES	6210								
	FILM PROCESSING	6240								
---			---	---	---	---	---	---	---	---
	PRINTING AND BINDING									
	INSURANCE									
	AUTOMOBILE INSURANCE	6265								
	SURETY AND FORGERY BON	6270								
---			---	---	---	---	---	---	---	---
	INSURANCE									
	UTILITIES									
19	GAS	6300	1,553		19	1,534	8%	1%	(1,325)	-85%
384	ELECTRICITY	6305	5,000		384	4,616	8%	8%	(392)	-8%
---			---	---	---	---	---	---	---	---
403	**UTILITIES**		**6,553**		**403**	**6,150**	**8%**	**6%**	**(1,717)**	**-26%**
	REPR/MAINT-OUTSIDE LABO									
	BUILDING R&M	6350	7,000	8,947		(1,947)	8%	0%	(7,000)	-100%
	OFFICE EQUIPMENT R&M	6365	1,500			1,500	8%	0%	(1,500)	-100%
	MINOR EQUIPMENT R&M	6382								
	MOTOR VEHICLE EQ. R&M	6384	1,500			1,500	8%	0%	(1,500)	-100%
	COMMUNICATION EQ. R&M	6390	1,500			1,500	8%	0%	(1,500)	-100%
	DISINFECT./EXTERMINATI	6394	800			800	8%	0%	(800)	-100%
	TOW IN CHARGES	6398								
---			---	---	---	---	---	---	---	---
	REPR/MAINT-OUTSIDE L		**12,300**	**8,947**		**3,353**	**8%**	**0%**	**(12,300)**	**-100%**
	RENTALS									
321	OFFICE EQUIPMENT RENT	6410	4,000		321	3,679	8%	8%	(148)	-4%
36	UNIFORM RENT	6430	500		36	464	8%	7%	(68)	-14%
	OTHER RENT	6449								
---			---	---	---	---	---	---	---	---
356	**RENTALS**		**4,500**		**356**	**4,144**	**8%**	**8%**	**(228)**	**-5%**
	OTHER SERVICES & CHARGE									
	DUES AND MEMBERSHIPS	6840	700			700	8%	0%	(700)	-100%

			CITY OF HATTIESBURG							
	001203 - GENERAL FUND-ENGR/PUBLIC SER		EXPENDITURE REPORT							
			1 Months Ending 10/31/12							
THIS MONTH			ANNUAL	OPEN PO	YTD	REMAINING	PERCENT		....PROJECTED....	
ACTUAL		OBJ/SUB	BUDGET	& CONTRACTS	ACTUAL	BALANCE	PLAN	ACTUAL	OVER/UNDER	%
600	REGISTRATION FEE/TUITI	6845	1,200		600	600	8%	50%	6,000	500%
	SERVICES NOT SPECIFIED	6999								
---			---	---	---	---	---	---	---	---
600	**OTHER SERVICES & CHA**		**1,900**		**600**	**1,300**	**8%**	**32%**	**5,300**	**279%**
---			---	---	---	---	---	---	---	---
11,112	**OTHER SERVICES & CHAR**		**262,753**	**8,947**	**11,112**	**242,694**	**8%**	**4%**	**(129,409)**	**-49%**
	_____									
	LAND									
	EASEMENTS	7010								
---			---	---	---	---	---	---	---	---
	LAND									
	MACHINERY AND EQUIPMENT									
	ENGINEERING	7305								
	OFFICE FURN/EQUIP.	7325								
	DATA PROCESSING EQUIP.	7327								
	COMMUNICATION EQUIPMEN	7355								
	EMERGENCY GENERATORS	7362								
---			---	---	---	---	---	---	---	---
	MACHINERY AND EQUIPM									
	VEHICLES									
	AUTOMOBILES	7400								
	PICK UP TRUCKS	7420								
---			---	---	---	---	---	---	---	---
	VEHICLES									
---			---	---	---	---	---	---	---	---
	CAPITAL OUTLAY									
---			---	---	---	---	---	---	---	---
35,911	**EXPENDITURES**		**621,533**	**8,947**	**35,911**	**576,675**	**8%**	**6%**	**(190,601)**	**-31%**

CITY OF HATTIESBURG
001204 - GENERAL FUND-SHOP DIVISION
EXPENDITURE REPORT
1 Months Ending 10/31/12

THIS MONTH ACTUAL		OBJ/SUB	ANNUAL BUDGET	OPEN PO & CONTRACTS	YTD ACTUAL	REMAINING BALANCE	PERCENT PLAN	PERCENT ACTUAL	....PROJECTED.... OVER/UNDER	%
	SALARIES									
21,240	REGULAR WAGES	4000	306,979		21,240	285,739	8%	7%	(52,099)	-17%
	DISASTER RECOVERY WAGE	4010								
100	OVERTIME	4300	15,000		100	14,900	8%	1%	(13,800)	-92%
	DISASTER RECOVERY OVER	4310								
---			---	---	---	---	---	---	---	---
21,340	**SALARIES**		**321,979**		**21,340**	**300,639**	**8%**	**7%**	**(65,899)**	**-20%**
	EMPLOYEE BENEFITS									
3,043	STATE RETIREMENT	4600	45,915		3,043	42,872	8%	7%	(9,399)	-20%
1,538	F.I.C.A. TAXES	4700	24,640		1,538	23,102	8%	6%	(6,184)	-25%
4,268	HOSPITALIZATION INS.	4800	62,640		4,268	58,372	8%	7%	(11,424)	-18%
	UNEMPLOYMENT BENEFITS	4900								
	WORKMAN'S COMPENSATION	4910	7,800			7,800	8%	0%	(7,800)	-100%
---			---	---	---	---	---	---	---	---
8,849	**EMPLOYEE BENEFITS**		**140,995**		**8,849**	**132,146**	**8%**	**6%**	**(34,807)**	**-25%**
---			---	---	---	---	---	---	---	---
30,189	**PERSONAL SERVICES**		**462,974**		**30,189**	**432,785**	**8%**	**7%**	**(100,706)**	**-22%**
	OFFICE SUPPLIES									
	PAPER	5003								
	PRINTED FORMS	5005								
	OTHER EXPENDABLE OFF.S	5010								
	MINOR OFFICE EQUIP/FUR	5020								
---			---	---	---	---	---	---	---	---
	OFFICE SUPPLIES									
	OPERATING SUPPLIES									
	CLEANING/JANITORIAL SP	5100								
	HOUSEHOLD SUPPLIES	5110								
	FOOD	5115								
	MEDICAL SUPPLIES	5120								
977	CHEMICALS	5130	5,000		977	4,023	8%	20%	6,724	134%
	GAS AND OIL	5250	7,000			7,000	8%	0%	(7,000)	-100%
	LUBRICANTS	5255								
	DIESEL FUEL	5257	8,000			8,000	8%	0%	(8,000)	-100%
	WEARING APPAREL	5355								

CITY OF HATTIESBURG
001204 - GENERAL FUND-SHOP DIVISION
EXPENDITURE REPORT
1 Months Ending 10/31/12

THIS MONTH ACTUAL		OBJ/SUB	ANNUAL BUDGET	OPEN PO & CONTRACTS	YTD ACTUAL	REMAINING BALANCE	PERCENT PLAN	PERCENT ACTUAL	....PROJECTED.... OVER/UNDER	%
	HAND TOOLS	5450	1,500			1,500	8%	0%	(1,500)	-100%
36	MINOR EQUIPMENT	5460	6,500		36	6,464	8%	1%	(6,068)	-93%
450	OTHER OPERATING MATL/S	5590	900	386	450	64	8%	50%	4,500	500%
---			---	---	---	---	---	---	---	---
1,463	**OPERATING SUPPLIES**		**28,900**	**386**	**1,463**	**27,051**	**8%**	**5%**	**(11,344)**	**-39%**
	REPAIR & MAINTENANCE SP									
	BUILDING MATERIALS & S	5600	1,000			1,000	8%	0%	(1,000)	-100%
	ELECTRICAL SUPPLIES	5605	1,340			1,340	8%	0%	(1,340)	-100%
	PLUMBING SUPPLIES	5610	200			200	8%	0%	(200)	-100%
	STRUCTURAL STEEL & IRO	5620	8,000			8,000	8%	0%	(8,000)	-100%
	PAINT AND PAINTING SPL	5650								
33	MTR VEHICLE REP. PTS/S	5700	2,000		33	1,967	8%	2%	(1,604)	-80%
	TROLLEY REPR PARTS & S	5710	485			485	8%	0%	(485)	-100%
	COMMUNICATION REPAIR P	5750	750			750	8%	0%	(750)	-100%
	EXPENDABLE WELDING SPL	5770								
169	OTHER REPAIR/MAINT. SP	5990	5,000		169	4,831	8%	3%	(2,972)	-59%
---			---	---	---	---	---	---	---	---
203	**REPAIR & MAINTENANCE**		**18,775**		**203**	**18,572**	**8%**	**1%**	**(16,339)**	**-87%**
---			---	---	---	---	---	---	---	---
1,665	**SUPPLIES AND EXPENSES**		**47,675**	**386**	**1,665**	**45,623**	**8%**	**3%**	**(27,695)**	**-58%**
	_____									
	TRANSPORTATION									
	FREIGHT	6120								
---			---	---	---	---	---	---	---	---
	TRANSPORTATION									
	INSURANCE									
	BOILER MACHINERY	6260								
	AUTOMOBILE INSURANCE	6265								
---			---	---	---	---	---	---	---	---
	INSURANCE									
	UTILITIES									
26	GAS	6300	3,000		26	2,974	8%	1%	(2,688)	-90%
1,984	ELECTRICITY	6305	35,000		1,984	33,016	8%	6%	(11,192)	-32%
---			---	---	---	---	---	---	---	---
2,010	**UTILITIES**		**38,000**		**2,010**	**35,990**	**8%**	**5%**	**(13,880)**	**-37%**
	REPR/MAINT-OUTSIDE LABO									
	BUILDING R&M	6350								

			CITY OF HATTIESBURG							
	001204 - GENERAL FUND-SHOP DIVISION		EXPENDITURE REPORT							
			1 Months Ending 10/31/12							
THIS MONTH			ANNUAL	OPEN PO	YTD	REMAINING	PERCENT		....PROJECTED....	
ACTUAL		OBJ/SUB	BUDGET	& CONTRACTS	ACTUAL	BALANCE	PLAN	ACTUAL	OVER/UNDER	%
	ELECTRICAL R&M	6355								
	PLUMBING EQUIPMENT R&M	6357								
	OFFICE EQUIPMENT R&M	6365	150			150	8%	0%	(150)	-100%
	FIXED EQUIPMENT R&M	6380	100			100	8%	0%	(100)	-100%
	MINOR EQUIPMENT R&M	6382	1,500			1,500	8%	0%	(1,500)	-100%
	MOTOR VEHICLE EQ. R&M	6384	2,500			2,500	8%	0%	(2,500)	-100%
	TROLLEY EQUIPMENT R&M	6385	1,301			1,301	8%	0%	(1,301)	-100%
	COMMUNICATION EQ. R&M	6390								
	DISINFECT./EXTERMINATI	6394								
	TOW IN CHARGES	6398								
	OTHER REPAIRS AND MAIN	6399								
---			---	---	---	---	---	---	---	---
	REPR/MAINT-OUTSIDE L		**5,551**			**5,551**	**8%**	**0%**	**(5,551)**	**-100%**
	RENTALS									
59	CYLINDER RENT	6425	700		59	641	8%	8%	8	1%
592	UNIFORM RENT	6430	2,500		592	1,908	8%	24%	4,604	184%
	OTHER RENT	6449								
---			---	---	---	---	---	---	---	---
651	**RENTALS**		**3,200**		**651**	**2,549**	**8%**	**20%**	**4,612**	**144%**
	OTHER SERVICES & CHARGE									
	SERVICES NOT SPECIFIED	6999	600			600	8%	0%	(600)	-100%
---			---	---	---	---	---	---	---	---
	OTHER SERVICES & CHA		**600**			**600**	**8%**	**0%**	**(600)**	**-100%**
---			---	---	---	---	---	---	---	---
2,662	**OTHER SERVICES & CHAR**		**47,351**		**2,662**	**44,689**	**8%**	**6%**	**(15,407)**	**-33%**
	_____									
	BUILDING/BLD IMPROVEMEN									
	BUILDINGS	7100								
	PUBLIC WORKS SHOP BLD	7100 05								
---			---	---	---	---	---	---	---	---
	BUILDINGS									
---			---	---	---	---	---	---	---	---
	BUILDING/BLD IMPROVE									
	IMPROVEMENT OTHER THAN									
	OTHER IMPROVEMENTS	7295								
---			---	---	---	---	---	---	---	---
	IMPROVEMENT OTHER TH									

			CITY OF HATTIESBURG							
	001204 - GENERAL FUND-SHOP DIVISION		EXPENDITURE REPORT							
			1 Months Ending 10/31/12							
THIS MONTH			ANNUAL	OPEN PO	YTD	REMAINING	PERCENT		....PROJECTED....	
ACTUAL		OBJ/SUB	BUDGET	& CONTRACTS	ACTUAL	BALANCE	PLAN	ACTUAL	OVER/UNDER	%
	MACHINERY AND EQUIPMENT									
	HOUSEHOLD FURN/EQUIP.	7320								
	PLANT EQUIPMENT	7340								
	OTHER EQUIPMENT	7399	8,000			8,000	8%	0%	(8,000)	-100%
---			---	---	---	---	---	---	---	---
	MACHINERY AND EQUIPM		**8,000**			**8,000**	**8%**	**0%**	**(8,000)**	**-100%**
	VEHICLES									
	AUTOMOBILES	7400								
	PICK UP TRUCKS	7420								
	SPECIAL TRUCKS	7450								
---			---	---	---	---	---	---	---	---
	VEHICLES									
---			---	---	---	---	---	---	---	---
	CAPITAL OUTLAY		**8,000**			**8,000**	**8%**	**0%**	**(8,000)**	**-100%**
---			---	---	---	---	---	---	---	---
34,516	**EXPENDITURES**		**566,000**	**386**	**34,516**	**531,097**	**8%**	**6%**	**(151,808)**	**-27%**

CITY OF HATTIESBURG
001205 - GENERAL FUND-G O & F SDIV.
EXPENDITURE REPORT
1 Months Ending 10/31/12

THIS MONTH ACTUAL		OBJ/SUB	ANNUAL BUDGET	OPEN PO & CONTRACTS	YTD ACTUAL	REMAINING BALANCE	PERCENT PLAN	PERCENT ACTUAL	....PROJECTED.... OVER/UNDER	%
	SALARIES									
14,329	REGULAR WAGES	4000	212,282		14,329	197,953	8%	7%	(40,334)	-19%
	DISASTER RECOVERY WAGE	4010								
	OVERTIME	4300	6,000			6,000	8%	0%	(6,000)	-100%
	DISASTER RECOVERY OVER	4310								
---			---	---	---	---	---	---	---	---
14,329	**SALARIES**		**218,282**		**14,329**	**203,953**	**8%**	**7%**	**(46,334)**	**-21%**
	EMPLOYEE BENEFITS									
2,043	STATE RETIREMENT	4600	31,130		2,043	29,087	8%	7%	(6,614)	-21%
1,068	F.I.C.A. TAXES	4700	16,705		1,068	15,637	8%	6%	(3,889)	-23%
2,716	HOSPITALIZATION INS.	4800	46,980		2,716	44,264	8%	6%	(14,388)	-31%
	UNEMPLOYMENT BENEFITS	4900								
	WORKMAN'S COMPENSATION	4910	1,553			1,553	8%	0%	(1,553)	-100%
---			---	---	---	---	---	---	---	---
5,827	**EMPLOYEE BENEFITS**		**96,368**		**5,827**	**90,541**	**8%**	**6%**	**(26,444)**	**-27%**
---			---	---	---	---	---	---	---	---
20,157	**PERSONAL SERVICES**		**314,650**		**20,157**	**294,493**	**8%**	**6%**	**(72,766)**	**-23%**
	OFFICE SUPPLIES									
7	PAPER	5003	400		7	393	8%	2%	(316)	-79%
	PRINTED FORMS	5005								
216	OTHER EXPENDABLE OFF.S	5010	1,500	294	216	990	8%	14%	1,092	73%
	MINOR OFFICE EQUIP/FUR	5020	650			650	8%	0%	(650)	-100%
	SUBSCRIPTIONS,MAGS,MAP	5050								
	BOOKS	5070								
	COMPUTER SUPPLIES	5080								
---			---	---	---	---	---	---	---	---
223	**OFFICE SUPPLIES**		**2,550**	**294**	**223**	**2,033**	**8%**	**9%**	**126**	**5%**
	OPERATING SUPPLIES									
397	CLEANING/JANITORIAL SP	5100	2,450		397	2,053	8%	16%	2,314	94%
285	HOUSEHOLD SUPPLIES	5110	600		285	315	8%	48%	2,820	470%
	MEDICAL SUPPLIES	5120	100			100	8%	0%	(100)	-100%
	CHEMICALS	5130								
	DIESEL FUEL-GENERATORS	5257	9,000			9,000	8%	0%	(9,000)	-100%
	WEARING APPAREL	5355								

CITY OF HATTIESBURG
001205 - GENERAL FUND-G O & F SDIV.
EXPENDITURE REPORT
1 Months Ending 10/31/12

THIS MONTH ACTUAL		OBJ/SUB	ANNUAL BUDGET	OPEN PO & CONTRACTS	YTD ACTUAL	REMAINING BALANCE	PERCENT PLAN	PERCENT ACTUAL	....PROJECTED.... OVER/UNDER	%
	HAND TOOLS	5450								
	MINOR EQUIPMENT	5460	250			250	8%	0%	(250)	-100%
	OTHER OPERATING MATL/S	5590	450			450	8%	0%	(450)	-100%
---			---	---	---	---	---	---	---	---
682	**OPERATING SUPPLIES**		**12,850**		**682**	**12,168**	**8%**	**5%**	**(4,666)**	**-36%**
	REPAIR & MAINTENANCE SP									
	BUILDING MATERIALS & S	5600	50			50	8%	0%	(50)	-100%
	ELECTRICAL SUPPLIES	5605	550			550	8%	0%	(550)	-100%
	PLUMBING SUPPLIES	5610	100			100	8%	0%	(100)	-100%
	PAINT AND PAINTING SPL	5650	500			500	8%	0%	(500)	-100%
	COMMUNICATION REPAIR P	5750								
---			---	---	---	---	---	---	---	---
	REPAIR & MAINTENANCE		**1,200**			**1,200**	**8%**	**0%**	**(1,200)**	**-100%**
---			---	---	---	---	---	---	---	---
905	**SUPPLIES AND EXPENSES**		**16,600**	**294**	**905**	**15,401**	**8%**	**5%**	**(5,740)**	**-35%**
	PROFESSIONAL SERVICES									
	OTHER PROFESSIONAL SER	6049	17,455			17,455	8%	0%	(17,455)	-100%
---			---	---	---	---	---	---	---	---
	PROFESSIONAL SERVICE		**17,455**			**17,455**	**8%**	**0%**	**(17,455)**	**-100%**
	COMMUNICATIONS									
82	TELEPHONE AND TELEGRAP	6060	1,500		82	1,418	8%	5%	(516)	-34%
	POSTAGE	6070								
---			---	---	---	---	---	---	---	---
82	**COMMUNICATIONS**		**1,500**		**82**	**1,418**	**8%**	**5%**	**(516)**	**-34%**
	TRANSPORTATION									
	FREIGHT	6120								
	MESSENGER/EXPRESS SERV	6130								
---			---	---	---	---	---	---	---	---
	TRANSPORTATION									
	UTILITIES									
64	ELECTRICITY	6305	780		64	716	8%	8%	(12)	-2%
---			---	---	---	---	---	---	---	---
64	**UTILITIES**		**780**		**64**	**716**	**8%**	**8%**	**(12)**	**-2%**
	REPR/MAINT-OUTSIDE LABO									
	OFFICE EQUIPMENT R&M	6365	750			750	8%	0%	(750)	-100%
	HOUSEHOLD EQUIPMENT R&	6370								

CITY OF HATTIESBURG
001205 - GENERAL FUND-G O & F SDIV.
EXPENDITURE REPORT
1 Months Ending 10/31/12

THIS MONTH ACTUAL		OBJ/SUB	ANNUAL BUDGET	OPEN PO & CONTRACTS	YTD ACTUAL	REMAINING BALANCE	PERCENT PLAN	PERCENT ACTUAL	....PROJECTED.... OVER/UNDER	%
	FIXED EQUIPMENT R&M	6380								
	MINOR EQUIPMENT R&M	6382								
	COMMUNICATION EQ. R&M	6390								
	DISINFECT./EXTERMINATI	6394	1,500			1,500	8%	0%	(1,500)	-100%
---			---	---	---	---	---	---	---	---
	REPR/MAINT-OUTSIDE L		**2,250**			**2,250**	**8%**	**0%**	**(2,250)**	**-100%**
	RENTALS									
	OFFICE EQUIPMENT RENT	6410								
32	UNIFORM RENT	6430	650		32	618	8%	5%	(266)	-41%
105	MOP-MAT-RAG RENT	6435	1,900		105	1,795	8%	6%	(640)	-34%
---			---	---	---	---	---	---	---	---
137	**RENTALS**		**2,550**		**137**	**2,413**	**8%**	**5%**	**(906)**	**-36%**
	OTHER SERVICES & CHARGE									
	REGISTRATION FEE/TUITI	6845								
	LAUNDRY	6850								
---			---	---	---	---	---	---	---	---
	OTHER SERVICES & CHA									
---			---	---	---	---	---	---	---	---
283	**OTHER SERVICES & CHAR**		**24,535**		**283**	**24,252**	**8%**	**1%**	**(21,139)**	**-86%**
	_____									
	BUILDING/BLD IMPROVEMEN									
	BUILDINGS	7100								
	PUB.SERV./SANITA.BLDG	7100 18								
---			---	---	---	---	---	---	---	---
	BUILDINGS									
	BUILDING IMPROVEMENTS	7150								
	AUTOMATED FUEL CTR-BA	7150 03								
---			---	---	---	---	---	---	---	---
	BUILDING IMPROVEMEN									
---			---	---	---	---	---	---	---	---
	BUILDING/BLD IMPROVE									
	MACHINERY AND EQUIPMENT									
	HOUSEHOLD FURN/EQUIP.	7320								
	OFFICE FURN/EQUIP.	7325	945			945	8%	0%	(945)	-100%
	DATA PROCESSING EQUIP.	7327	3,000			3,000	8%	0%	(3,000)	-100%
	FUEL FAC.SOFTWARE/EQ	7328	2,000			2,000	8%	0%	(2,000)	-100%
---			---	---	---	---	---	---	---	---

			CITY OF HATTIESBURG							
	001205 - GENERAL FUND-G O & F SDIV.		EXPENDITURE REPORT							
			1 Months Ending 10/31/12							
THIS MONTH			ANNUAL	OPEN PO	YTD	REMAINING	PERCENT		....PROJECTED....	
ACTUAL		OBJ/SUB	BUDGET	& CONTRACTS	ACTUAL	BALANCE	PLAN	ACTUAL	OVER/UNDER	%
	MACHINERY AND EQUIPM		**5,945**			**5,945**	**8%**	**0%**	**(5,945)**	**-100%**
---			---	---	---	---	---	---	---	---
	CAPITAL OUTLAY		**5,945**			**5,945**	**8%**	**0%**	**(5,945)**	**-100%**
---			---	---	---	---	---	---	---	---
21,344	**EXPENDITURES**		**361,730**	**294**	**21,344**	**340,092**	**8%**	**6%**	**(105,602)**	**-29%**

CITY OF HATTIESBURG
001206 - GENERAL FUND-DRAINAGEDIV.
EXPENDITURE REPORT
1 Months Ending 10/31/12

THIS MONTH ACTUAL		OBJ/SUB	ANNUAL BUDGET	OPEN PO & CONTRACTS	YTD ACTUAL	REMAINING BALANCE	PERCENT PLAN	PERCENT ACTUAL	....PROJECTED.... OVER/UNDER	%
	SALARIES									
8,331	REGULAR WAGES	4000	112,323		8,331	103,992	8%	7%	(12,351)	-11%
	DISASTER RECOVERY WAGE	4010								
	OVERTIME	4300	1,500			1,500	8%	0%	(1,500)	-100%
	DISASTER RECOVERY OVER	4310								
---			---	---	---	---	---	---	---	---
8,331	**SALARIES**		**113,823**		**8,331**	**105,492**	**8%**	**7%**	**(13,851)**	**-12%**
	EMPLOYEE BENEFITS									
1,188	STATE RETIREMENT	4600	16,235		1,188	15,047	8%	7%	(1,979)	-12%
630	F.I.C.A. TAXES	4700	8,710		630	8,080	8%	7%	(1,150)	-13%
1,940	HOSPITALIZATION INS.	4800	26,100		1,940	24,160	8%	7%	(2,820)	-11%
	UNEMPLOYMENT BENEFITS	4900	1,000			1,000	8%	0%	(1,000)	-100%
	WORKMAN'S COMPENSATION	4910	5,010			5,010	8%	0%	(5,010)	-100%
---			---	---	---	---	---	---	---	---
3,758	**EMPLOYEE BENEFITS**		**57,055**		**3,758**	**53,297**	**8%**	**7%**	**(11,959)**	**-21%**
---			---	---	---	---	---	---	---	---
12,088	**PERSONAL SERVICES**		**170,878**		**12,088**	**158,790**	**8%**	**7%**	**(25,822)**	**-15%**
	OPERATING SUPPLIES									
	CHEMICALS	5130								
	GAS AND OIL	5250	5,500			5,500	8%	0%	(5,500)	-100%
	LUBRICANTS	5255								
	DIESEL FUEL	5257	1,500			1,500	8%	0%	(1,500)	-100%
476	WEARING APPAREL	5355	500		476	25	8%	95%	5,212	42%
	CONCRETE, CEMENT, ETC.	5405	17,430	1,570		15,860	8%	0%	(17,430)	-100%
	BRICK,STONE,MORTAR,ETC	5410	5,000	641		4,359	8%	0%	(5,000)	-100%
1,318	SAND,CLAY,GRVL,FILL DI	5415	11,000		1,318	9,682	8%	12%	4,816	44%
	DRAINAGE PIPE & CULVER	5420	28,000			28,000	8%	0%	(28,000)	-100%
	HORT./LANDSCAPING SPLY	5440								
	HAND TOOLS	5450	1,000			1,000	8%	0%	(1,000)	-100%
	MINOR EQUIPMENT	5460	1,200			1,200	8%	0%	(1,200)	-100%
	OTHER OPERATING MATL/S	5590	1,200			1,200	8%	0%	(1,200)	-100%
	OTHER OPER.MATL-BROWNS	5591								
---			---	---	---	---	---	---	---	---
1,793	**OPERATING SUPPLIES**		**72,330**	**2,211**	**1,793**	**68,325**	**8%**	**2%**	**(50,814)**	**-70%**

CITY OF HATTIESBURG
001206 - GENERAL FUND-DRAINAGEDIV.
EXPENDITURE REPORT
1 Months Ending 10/31/12

THIS MONTH ACTUAL		OBJ/SUB	ANNUAL BUDGET	OPEN PO & CONTRACTS	YTD ACTUAL	REMAINING BALANCE	PERCENT PLAN	PERCENT ACTUAL	....PROJECTED.... OVER/UNDER	%
	REPAIR & MAINTENANCE SP									
	STRUCTURAL STEEL & IRO	5620								
	MTR VEHICLE REP. PTS/S	5700	2,000			2,000	8%	0%	(2,000)	-100%
	COMMUNICATION REPAIR P	5750								
---			---	---	---	---	---	---	---	---
	REPAIR & MAINTENANCE		**2,000**			**2,000**	**8%**	**0%**	**(2,000)**	**-100%**
---			---	---	---	---	---	---	---	---
1,793	**SUPPLIES AND EXPENSES**		**74,330**	**2,211**	**1,793**	**70,325**	**8%**	**2%**	**(52,814)**	**-71%**
	PROFESSIONAL SERVICES									
	CONSULTANT SERV-BROWNS	6020								
	OTHER PROFESSIONAL SER	6049	30,000			30,000	8%	0%	(30,000)	-100%
---			---	---	---	---	---	---	---	---
	PROFESSIONAL SERVICE		**30,000**			**30,000**	**8%**	**0%**	**(30,000)**	**-100%**
	TRANSPORTATION									
	TRVL EXP-BROWNSFIELD P	6116								
	FREIGHT	6120								
---			---	---	---	---	---	---	---	---
	TRANSPORTATION									
	ADVERTISING									
	ADVERTISING	6150								
---			---	---	---	---	---	---	---	---
	ADVERTISING									
	INSURANCE									
	AUTOMOBILE INSURANCE	6265								
---			---	---	---	---	---	---	---	---
	INSURANCE									
	UTILITIES									
	ELECTRICITY	6305								
---			---	---	---	---	---	---	---	---
	UTILITIES									
	REPR/MAINT-OUTSIDE LABO									
49,126	STREETS & STRUCTURES R	6360	400,000		49,126	350,874	8%	12%	189,512	47%
	MOTOR VEHICLE EQ. R&M	6384	5,000			5,000	8%	0%	(5,000)	-100%
	COMMUNICATION EQ. R&M	6390								
	TOW IN CHARGES	6398	200			200	8%	0%	(200)	-100%
---			---	---	---	---	---	---	---	---

CITY OF HATTIESBURG
001206 - GENERAL FUND-DRAINAGEDIV.
EXPENDITURE REPORT
1 Months Ending 10/31/12

THIS MONTH ACTUAL		OBJ/SUB	ANNUAL BUDGET	OPEN PO & CONTRACTS	YTD ACTUAL	REMAINING BALANCE	PERCENT PLAN	PERCENT ACTUAL	....PROJECTED.... OVER/UNDER	%
49,126	**REPR/MAINT-OUTSIDE L**		**405,200**		**49,126**	**356,074**	**8%**	**12%**	**184,312**	**45%**
	RENTALS									
	MACHINERY RENT	6420								
111	UNIFORM RENT	6430	800		111	689	8%	14%	532	67%
---			---	---	---	---	---	---	---	---
111	**RENTALS**		**800**		**111**	**689**	**8%**	**14%**	**532**	**67%**
	OTHER SERVICES & CHARGE									
	SERVICES NOT SPECIFIED	6999								
---			---	---	---	---	---	---	---	---
	OTHER SERVICES & CHA									
---			---	---	---	---	---	---	---	---
49,236	**OTHER SERVICES & CHAR**		**436,000**		**49,236**	**386,764**	**8%**	**11%**	**154,832**	**36%**
	_____									
	LAND									
	EASEMENTS	7010								
---			---	---	---	---	---	---	---	---
	LAND									
	IMPROVEMENT OTHER THAN									
	DRAINS	7215								
60,807	NRCS EROSION CONTROL	7215 01	790,850		60,807	730,043	8%	8%	(61,166)	-8%
---			---	---	---	---	---	---	---	---
60,807	**DRAINS**		**790,850**		**60,807**	**730,043**	**8%**	**8%**	**(61,166)**	**-8%**
	OTHER IMPROVEMENTS	7295								
	MISC. PROJECTS	7296								
	ENVIRON PROJ-KERR MAG	7296 01								
	ENVIRON PROJ-MS TANK	7296 02								
	NCBM-BROWNFIELDS STUD	7296 03								
	ENVIRON PROJ-BROWNSFI	7296 04								
	DEQ-CREEK BANK-RIVER	7296 05								
	CREEK - LILLIE BURNEY	7296 06								
	CREEK - DEPOT BAKERY	7296 07								
---			---	---	---	---	---	---	---	---
	MISC. PROJECTS									
---			---	---	---	---	---	---	---	---
60,807	**IMPROVEMENT OTHER TH**		**790,850**		**60,807**	**730,043**	**8%**	**8%**	**(61,166)**	**-8%**
	MACHINERY AND EQUIPMENT									
	DP EQUIP-BROWNSFIELD P	7324								

			CITY OF HATTIESBURG							
	001206 - GENERAL FUND-DRAINAGEDIV.		EXPENDITURE REPORT							
			1 Months Ending 10/31/12							
THIS MONTH			ANNUAL	OPEN PO	YTD	REMAINING	PERCENT		....PROJECTED....	
ACTUAL		OBJ/SUB	BUDGET	& CONTRACTS	ACTUAL	BALANCE	PLAN	ACTUAL	OVER/UNDER	%
	CONSTRUCTION EQUIPMENT	7345								
	PIPE	7370								
	OTHER EQUIPMENT	7399								
---			---	---	---	---	---	---	---	---
	MACHINERY AND EQUIPM									
	VEHICLES									
	PICK UP TRUCKS	7420								
	DUMP TRUCKS	7440								
---			---	---	---	---	---	---	---	---
	VEHICLES									
---			---	---	---	---	---	---	---	---
60,807	**CAPITAL OUTLAY**		**790,850**		**60,807**	**730,043**	**8%**	**8%**	**(61,166)**	**-8%**
---			---	---	---	---	---	---	---	---
123,925	**EXPENDITURES**		**1,472,058**	**2,211**	**123,925**	**1,345,922**	**8%**	**8%**	**15,042**	**1%**

CITY OF HATTIESBURG
001207 - GENERAL FUND-CONSTRUCTION
EXPENDITURE REPORT
1 Months Ending 10/31/12

THIS MONTH ACTUAL		OBJ/SUB	ANNUAL BUDGET	OPEN PO & CONTRACTS	YTD ACTUAL	REMAINING BALANCE	PERCENT PLAN	PERCENT ACTUAL	....PROJECTED.... OVER/UNDER	%
	SALARIES									
28,492	REGULAR WAGES	4000	425,759		28,492	397,267	8%	7%	(83,855)	-20%
	DISASTER RECOVERY WAGE	4010								
1,482	OVERTIME	4300	8,000		1,482	6,518	8%	19%	9,784	122%
	DISASTER RECOVERY OVER	4310								
---			---	---	---	---	---	---	---	---
29,974	**SALARIES**		**433,759**		**29,974**	**403,785**	**8%**	**7%**	**(74,071)**	**-17%**
	EMPLOYEE BENEFITS									
4,274	STATE RETIREMENT	4600	61,855		4,274	57,581	8%	7%	(10,567)	-17%
2,171	F.I.C.A. TAXES	4700	33,185		2,171	31,014	8%	7%	(7,133)	-21%
5,432	HOSPITALIZATION INS.	4800	83,520		5,432	78,088	8%	7%	(18,336)	-22%
	UNEMPLOYMENT BENEFITS	4900	2,500			2,500	8%	0%	(2,500)	-100%
	WORKMAN'S COMPENSATION	4910	32,000			32,000	8%	0%	(32,000)	-100%
---			---	---	---	---	---	---	---	---
11,877	**EMPLOYEE BENEFITS**		**213,060**		**11,877**	**201,183**	**8%**	**6%**	**(70,536)**	**-33%**
---			---	---	---	---	---	---	---	---
41,851	**PERSONAL SERVICES**		**646,819**		**41,851**	**604,968**	**8%**	**6%**	**(144,607)**	**-22%**
	OFFICE SUPPLIES									
	PAPER	5003								
	PRINTED FORMS	5005								
	OTHER EXPENDABLE OFF.S	5010	400			400	8%	0%	(400)	-100%
	MINOR OFFICE EQUIP/FUR	5020								
	SUBSCRIPTIONS,MAGS,MAP	5050								
	BOOKS	5070	150			150	8%	0%	(150)	-100%
---			---	---	---	---	---	---	---	---
	OFFICE SUPPLIES		**550**			**550**	**8%**	**0%**	**(550)**	**-100%**
	OPERATING SUPPLIES									
	CLEANING/JANITORIAL SP	5100								
	CHEMICALS	5130	150			150	8%	0%	(150)	-100%
	GAS AND OIL	5250	21,150			21,150	8%	0%	(21,150)	-100%
	LUBRICANTS	5255	400			400	8%	0%	(400)	-100%
	DIESEL FUEL	5257	1,200			1,200	8%	0%	(1,200)	-100%
	WEARING APPAREL	5355	750			750	8%	0%	(750)	-100%
	CONCRETE, CEMENT, ETC.	5405	1,100			1,100	8%	0%	(1,100)	-100%

			CITY OF HATTIESBURG							
	001207 - GENERAL FUND-CONSTRUCTION		EXPENDITURE REPORT							
			1 Months Ending 10/31/12							
THIS MONTH			ANNUAL	OPEN PO	YTD	REMAINING	PERCENT		....PROJECTED....	
ACTUAL		OBJ/SUB	BUDGET	& CONTRACTS	ACTUAL	BALANCE	PLAN	ACTUAL	OVER/UNDER	%
	SAND,CLAY,GRVL,FILL DI	5415								
	DRAINAGE PIPE & CULVER	5420								
	HORT./LANDSCAPING SPLY	5440								
405	HAND TOOLS	5450	8,100		405	7,695	8%	5%	(3,240)	-40%
180	MINOR EQUIPMENT	5460	7,200		180	7,020	8%	3%	(5,040)	-70%
	TRAFFIC SIGNS	5545	100			100	8%	0%	(100)	-100%
893	OTHER OPERATING MATL/S	5590	5,000		893	4,107	8%	18%	5,716	114%
---			---	---	---	---	---	---	---	---
1,478	**OPERATING SUPPLIES**		**45,150**		**1,478**	**43,672**	**8%**	**3%**	**(27,414)**	**-61%**
	REPAIR & MAINTENANCE SP									
108	BUILDING MATERIALS & S	5600	11,000		108	10,892	8%	1%	(9,704)	-88%
3,235	ELECTRICAL SUPPLIES	5605	10,000	1,152	3,235	5,613	8%	32%	28,820	288%
402	PLUMBING SUPPLIES	5610	3,000		402	2,598	8%	13%	1,824	61%
	STRUCTURAL STEEL & IRO	5620	750			750	8%	0%	(750)	-100%
71	PAINT AND PAINTING SPL	5650	1,200		71	1,129	8%	6%	(348)	-29%
171	MTR VEHICLE REP. PTS/S	5700	2,500		171	2,329	8%	7%	(448)	-18%
	GENERATOR REP. PTS/SPL	5705								
	COMMUNICATION REPAIR P	5750	1,000			1,000	8%	0%	(1,000)	-100%
	AGRICLTRL REPAIR PTS/S	5755	1,300	41		1,259	8%	0%	(1,300)	-100%
	EXPENDABLE WELDING SPL	5770	500			500	8%	0%	(500)	-100%
205	OTHER REPAIR/MAINT. SP	5990	3,384	583	205	2,596	8%	6%	(924)	-27%
---			---	---	---	---	---	---	---	---
4,192	**REPAIR & MAINTENANCE**		**34,634**	**1,776**	**4,192**	**28,666**	**8%**	**12%**	**15,670**	**45%**
	REPR PARTS/SUPPLIES									
	REPR/MAINT SPL-EATON S	5991 01	300			300	8%	0%	(300)	-100%
	REPR/MAINT SPL-DOWNTOW	5991 02	60,000	3,987		56,013	8%	0%	(60,000)	-100%
	REPR SPLY-STORMS	5995								
	8/29/05-HURRICANE KAT	5995 01								
	9/1/08-HURRICANE GUST	5995 02								
---			---	---	---	---	---	---	---	---
	REPR SPLY-STORMS									
	8/29/05 STORM SUPPLIES	5996								
	8/29 CHEMICALS PW8226	5996 01								
	8/29 ALLIED BLD PW340	5996 02								
---			---	---	---	---	---	---	---	---
	8/29/05 STORM SUPPL									
---			---	---	---	---	---	---	---	---

			CITY OF HATTIESBURG							
	001207 - GENERAL FUND-CONSTRUCTION		EXPENDITURE REPORT							
			1 Months Ending 10/31/12							
THIS MONTH			ANNUAL	OPEN PO	YTD	REMAINING	PERCENT		....PROJECTED....	
ACTUAL		OBJ/SUB	BUDGET	& CONTRACTS	ACTUAL	BALANCE	PLAN	ACTUAL	OVER/UNDER	%
	REPR PARTS/SUPPLIES		**60,300**	**3,987**		**56,313**	**8%**	**0%**	**(60,300)**	**-100%**
---			---	---	---	---	---	---	---	---
5,670	**SUPPLIES AND EXPENSES**		**140,634**	**5,763**	**5,670**	**129,201**	**8%**	**4%**	**(72,594)**	**-52%**
	PROFESSIONAL SERVICES									
	DEMOLITION	6013								
	ENGINEERING	6015								
---			---	---	---	---	---	---	---	---
	PROFESSIONAL SERVICE									
	COMMUNICATIONS									
197	TELEPHONE AND TELEGRAP	6060	1,640		197	1,443	8%	12%	724	44%
---			---	---	---	---	---	---	---	---
197	**COMMUNICATIONS**		**1,640**		**197**	**1,443**	**8%**	**12%**	**724**	**44%**
	TRANSPORTATION									
	FREIGHT	6120								
---			---	---	---	---	---	---	---	---
	TRANSPORTATION									
	ADVERTISING									
	ADVERTISING	6150								
---			---	---	---	---	---	---	---	---
	ADVERTISING									
	INSURANCE									
	AUTOMOBILE INSURANCE	6265								
---			---	---	---	---	---	---	---	---
	INSURANCE									
	UTILITIES									
	GAS	6300								
330	ELECTRICITY	6305	1,500		330	1,170	8%	22%	2,460	164%
---			---	---	---	---	---	---	---	---
330	**UTILITIES**		**1,500**		**330**	**1,170**	**8%**	**22%**	**2,460**	**164%**
	REPR/MAINT-OUTSIDE LABO									
	8/29/05 FACILITY REPRS	6351								
	8/29 TEMP ROOFS PW733	6351 01								
	8/29 ZOO ED CTR PW342	6351 02								
	8/29 AIRPORT PW2275	6351 03								
	8/29 ZOO GAZEBO PW194	6351 04								
	8/29 TRAIN DEP.PW1166	6351 05								

			CITY OF HATTIESBURG							
	001207 - GENERAL FUND-CONSTRUCTION		EXPENDITURE REPORT							
			1 Months Ending 10/31/12							
THIS MONTH			ANNUAL	OPEN PO	YTD	REMAINING	PERCENT		....PROJECTED....	
ACTUAL		OBJ/SUB	BUDGET	& CONTRACTS	ACTUAL	BALANCE	PLAN	ACTUAL	OVER/UNDER	%
	8/29 BURGR ROOF PW510	6351 06								
	8/29 AIRPORT PW6184	6351 07								
	8/29 P&F TRNG PW5158	6351 08								
	8/29 MAIN ROOF PW4465	6351 09								
	8/29 CONCESS RF PW447	6351 10								
	8/29 P&F TRNG PW5136	6351 11								
	8/29 SEWERS PW220	6351 12								
	8/29 WATER PW6379	6351 13								
	8/29 PLT 2 PW3427	6351 14								
	8/29 HPD PW474	6351 15								
	8/29 FIRE STA PW8294	6351 16								
	8/29 DAHMER PW1298	6351 17								
	8/29 DAHMER PW738	6351 18								
	8/29 DAHMER PW1269	6351 19								
	8/29 FIRE STA#8 PW444	6351 20								
	8/29 SOFTBALL PW736	6351 21								
	8/29 CAMERON FL PW730	6351 22								
	8/29 GARDEN CTR PW176	6351 23								
	8/29 AIRPORT PW3411	6351 24								
	8/29 AIRPORT PW3459	6351 25								
	8/29 CITY HALL PW1325	6351 26								
	8/29 LAGOON PW712	6351 27								
	8/29 TIMBERTON PW719	6351 28								
	8/29 HIGHLAND PW717	6351 29								
	8/29 TENNIS ROOF PW72	6351 30								
	8/29 AVIARY EXH PW742	6351 31								
	8/29 P&F ACA RF PW419	6351 32								
	8/29 COMPUTER6259/512	6351 33								
	8/29 WTR/SWR PW5492	6351 34								
	8/29 ROOF5492/295/117	6351 35								
	8/29 SPILLWAY PW7763	6351 36								
	8/29 PUB SER FAC PW48	6351 37								
	8/29 TRAF/CONST PW790	6351 38								
	8/29 CUL CTR RF PW332	6351 39								
---			---	---	---	---	---	---	---	---
	8/29/05 FACILITY RE									
	8/29/05 STORM REPAIRS	6353								

			CITY OF HATTIESBURG							
	001207 - GENERAL FUND-CONSTRUCTION		EXPENDITURE REPORT							
			1 Months Ending 10/31/12							
THIS MONTH			ANNUAL	OPEN PO	YTD	REMAINING	PERCENT		....PROJECTED....	
ACTUAL		OBJ/SUB	BUDGET	& CONTRACTS	ACTUAL	BALANCE	PLAN	ACTUAL	OVER/UNDER	%
	8/29/05 INFRAST REPRS	6354								
	8/29 TREE HAZ PW4667	6354 01								
	8/29 ROE PW 4667	6354 02								
	8/29 TRAFFIC SIGNS,SI	6354 03								
	8/29 NRCS DITCH CLEAR	6354 04								
	8/29 STREET REPAIRS	6354 05								
	8/29 LAGOON REPR WORK	6354 06								
	8/29 DEBRIS REMOVAL	6354 07								
	8/29 EMER SIGN INV &	6354 08								
	8/29 ROAD ASSESS & EN	6354 09								
	8/29 TRAF SIGNS PW508	6354 10								
	8/29 GENERATRS PW225-	6354 11								
	8/29 GENERATORS PW701	6354 12								
	8/29 BANK STABL PWXXX	6354 13								
---			---	---	---	---	---	---	---	---
	8/29/05 INFRAST REP									
	STREETS & STRUCTURES R	6360								
	OFFICE EQUIPMENT R&M	6365								
	MINOR EQUIPMENT R&M	6382	1,700			1,700	8%	0%	(1,700)	-100%
10,207	GENERATOR R&M	6383	85,680	1,600	10,207	73,873	8%	12%	36,804	43%
661	MOTOR VEHICLE EQ. R&M	6384	3,500		661	2,839	8%	19%	4,432	127%
	AGRICULTURAL EQ. R&M	6387	1,500			1,500	8%	0%	(1,500)	-100%
	COMMUNICATION EQ. R&M	6390	500			500	8%	0%	(500)	-100%
	DOWNTOWN LIGHTS R&M	6391	5,000			5,000	8%	0%	(5,000)	-100%
	DISINFECT./EXTERMINATI	6394	200			200	8%	0%	(200)	-100%
	REPRS/MAINT-EATON SCHL	6395								
	TOW IN CHARGES	6398	100			100	8%	0%	(100)	-100%
	OTHER REPAIRS AND MAIN	6399	1,554			1,554	8%	0%	(1,554)	-100%
---			---	---	---	---	---	---	---	---
10,868	**REPR/MAINT-OUTSIDE L**		**99,734**	**1,600**	**10,868**	**87,266**	**8%**	**11%**	**30,682**	**31%**
	RENTALS									
	LAND RENT	6400								
	MACHINERY RENT	6420	261			261	8%	0%	(261)	-100%
17	CYLINDER RENT	6425	200		17	183	8%	9%	4	2%
172	UNIFORM RENT	6430	2,500		172	2,328	8%	7%	(436)	-17%
12	OTHER RENT	6449	200		12	188	8%	6%	(56)	-28%
---			---	---	---	---	---	---	---	---

CITY OF HATTIESBURG
001207 - GENERAL FUND-CONSTRUCTION
EXPENDITURE REPORT
1 Months Ending 10/31/12

THIS MONTH ACTUAL		OBJ/SUB	ANNUAL BUDGET	OPEN PO & CONTRACTS	YTD ACTUAL	REMAINING BALANCE	PERCENT PLAN	PERCENT ACTUAL	....PROJECTED.... OVER/UNDER	%
201	**RENTALS**		**3,161**		**201**	**2,960**	**8%**	**6%**	**(749)**	**-24%**
	OTHER SERVICES & CHARGE									
	DUES AND MEMBERSHIPS	6840								
	SERVICES NOT SPECIFIED	6999								
---			---	---	---	---	---	---	---	---
	OTHER SERVICES & CHA									
---			---	---	---	---	---	---	---	---
11,596	**OTHER SERVICES & CHAR**		**106,035**	**1,600**	**11,596**	**92,839**	**8%**	**11%**	**33,117**	**31%**
	_____									
	LAND									
	EASEMENTS	7010								
---			---	---	---	---	---	---	---	---
	LAND									
	BUILDING/BLD IMPROVEMEN									
	BUILDINGS	7100								
	EUREKA SCHOOL	7100 03								
	BURGER BUILDING	7100 04								
	SAFE ROOMS-MEMA GRANT	7100 25								
---			---	---	---	---	---	---	---	---
	BUILDINGS									
	BUILDING IMPROVEMENTS	7150								
	STORAGE BUILDING	7150 33								
	EATON SCHL ROOF/CLG P	7150 38								
---			---	---	---	---	---	---	---	---
	BUILDING IMPROVEMEN									
---			---	---	---	---	---	---	---	---
	BUILDING/BLD IMPROVE									
	IMPROVEMENT OTHER THAN									
	DRAINS	7215								
	OTHER IMPROVEMENTS	7295								
	EAST JERUSALEM COMM C	7295 07	44,500			44,500	8%	0%	(44,500)	-100%
---			---	---	---	---	---	---	---	---
	OTHER IMPROVEMENTS		**44,500**			**44,500**	**8%**	**0%**	**(44,500)**	**-100%**
---			---	---	---	---	---	---	---	---
	IMPROVEMENT OTHER TH		**44,500**			**44,500**	**8%**	**0%**	**(44,500)**	**-100%**
	MACHINERY AND EQUIPMENT									
	8/29/05 STORM EQUIP	7302								

			CITY OF HATTIESBURG							
	001207 - GENERAL FUND-CONSTRUCTION		EXPENDITURE REPORT							
			1 Months Ending 10/31/12							
THIS MONTH			ANNUAL	OPEN PO	YTD	REMAINING	PERCENT		....PROJECTED....	
ACTUAL		OBJ/SUB	BUDGET	& CONTRACTS	ACTUAL	BALANCE	PLAN	ACTUAL	OVER/UNDER	%
	OFFICE FURN/EQUIP.	7325								
	DATA PROCESSING EQUIP.	7327								
	AGRICULTURAL EQUIPMENT	7335								
	CONSTRUCTION EQUIPMENT	7345								
	COMMUNICATION EQUIPMEN	7355								
	PIPE	7370								
	OTHER EQUIPMENT	7399								
---			---	---	---	---	---	---	---	---
	MACHINERY AND EQUIPM									
	VEHICLES									
	AUTOMOBILES	7400								
	PICK UP TRUCKS	7420								
	DUMP TRUCKS	7440								
---			---	---	---	---	---	---	---	---
	VEHICLES									
---			---	---	---	---	---	---	---	---
	CAPITAL OUTLAY		**44,500**			**44,500**	**8%**	**0%**	**(44,500)**	**-100%**
---			---	---	---	---	---	---	---	---
59,118	**EXPENDITURES**		**937,988**	**7,363**	**59,118**	**871,507**	**8%**	**6%**	**(228,572)**	**-24%**

CITY OF HATTIESBURG
001220 - GENERAL FUND-SANITATION DIV.
EXPENDITURE REPORT
1 Months Ending 10/31/12

THIS MONTH ACTUAL		OBJ/SUB	ANNUAL BUDGET	OPEN PO & CONTRACTS	YTD ACTUAL	REMAINING BALANCE	PERCENT PLAN	PERCENT ACTUAL	....PROJECTED.... OVER/UNDER	%
	SALARIES									
54,275	REGULAR WAGES	4000	748,779		54,275	694,504	8%	7%	(97,479)	-13%
	DISASTER RECOVERY WAGE	4010								
366	OVERTIME	4300	25,000		366	24,634	8%	1%	(20,608)	-82%
	DISASTER RECOVERY OVER	4310								
---			---	---	---	---	---	---	---	---
54,641	**SALARIES**		**773,779**		**54,641**	**719,138**	**8%**	**7%**	**(118,087)**	**-15%**
	EMPLOYEE BENEFITS									
7,792	STATE RETIREMENT	4600	110,345		7,792	102,553	8%	7%	(16,841)	-15%
4,111	F.I.C.A. TAXES	4700	59,195		4,111	55,084	8%	7%	(9,863)	-17%
11,645	HOSPITALIZATION INS.	4800	177,480		11,645	165,835	8%	7%	(37,740)	-21%
	UNEMPLOYMENT BENEFITS	4900	9,000			9,000	8%	0%	(9,000)	-100%
	WORKMAN'S COMPENSATION	4910	148,500			148,500	8%	0%	(148,500)	-100%
---			---	---	---	---	---	---	---	---
23,547	**EMPLOYEE BENEFITS**		**504,520**		**23,547**	**480,973**	**8%**	**5%**	**(221,956)**	**-44%**
---			---	---	---	---	---	---	---	---
78,189	**PERSONAL SERVICES**		**1,278,299**		**78,189**	**1,200,110**	**8%**	**6%**	**(340,031)**	**-27%**
	OFFICE SUPPLIES									
	OTHER EXPENDABLE OFF.S	5010	800			800	8%	0%	(800)	-100%
	MINOR OFFICE EQUIP/FUR	5020	100			100	8%	0%	(100)	-100%
	BOOKS	5070								
---			---	---	---	---	---	---	---	---
	OFFICE SUPPLIES		**900**			**900**	**8%**	**0%**	**(900)**	**-100%**
	OPERATING SUPPLIES									
	CLEANING/JANITORIAL SP	5100	1,800			1,800	8%	0%	(1,800)	-100%
116	HOUSEHOLD SUPPLIES	5110	900		116	784	8%	13%	492	55%
	FOOD	5115								
	MEDICAL SUPPLIES	5120								
	CHEMICALS	5130	1,000			1,000	8%	0%	(1,000)	-100%
2,391	GAS AND OIL	5250	29,000		2,391	26,610	8%	8%	(308)	-1%
	NATURAL GAS FUEL	5252								
	LUBRICANTS	5255	3,000			3,000	8%	0%	(3,000)	-100%
	DIESEL FUEL	5257	185,000			185,000	8%	0%	(185,000)	-100%
	WEARING APPAREL	5355	500	485		15	8%	0%	(500)	-100%

CITY OF HATTIESBURG
001220 - GENERAL FUND-SANITATION DIV.
EXPENDITURE REPORT
1 Months Ending 10/31/12

THIS MONTH ACTUAL		OBJ/SUB	ANNUAL BUDGET	OPEN PO & CONTRACTS	YTD ACTUAL	REMAINING BALANCE	PERCENT PLAN	PERCENT ACTUAL	....PROJECTED.... OVER/UNDER	%
	CONCRETE, CEMENT, ETC.	5405								
	HORT./LANDSCAPING SPLY	5440								
	HAND TOOLS	5450	1,500			1,500	8%	0%	(1,500)	-100%
	MINOR EQUIPMENT	5460	3,000			3,000	8%	0%	(3,000)	-100%
88	OTHER OPERATING MATL/S	5590	5,000		88	4,912	8%	2%	(3,944)	-79%
---			---	---	---	---	---	---	---	---
2,595	**OPERATING SUPPLIES**		**230,700**	**485**	**2,595**	**227,621**	**8%**	**1%**	**(199,560)**	**-87%**
	REPAIR & MAINTENANCE SP									
49	BUILDING MATERIALS & S	5600	500		49	451	8%	10%	88	18%
	ELECTRICAL SUPPLIES	5605	2,500			2,500	8%	0%	(2,500)	-100%
	PLUMBING SUPPLIES	5610	100			100	8%	0%	(100)	-100%
	STRUCTURAL STEEL & IRO	5620	1,500			1,500	8%	0%	(1,500)	-100%
	PAINT AND PAINTING SPL	5650								
7,988	MTR VEHICLE REP. PTS/S	5700	105,000	4,105	7,988	92,907	8%	8%	(9,144)	-9%
	COMMUNICATION REPAIR P	5750	150			150	8%	0%	(150)	-100%
	EXPENDABLE WELDING SPL	5770								
	MINOR COMPUTER EQUIP.	5800								
	OTHER REPAIR/MAINT. SP	5990								
---			---	---	---	---	---	---	---	---
8,037	**REPAIR & MAINTENANCE**		**109,750**	**4,105**	**8,037**	**97,608**	**8%**	**7%**	**(13,306)**	**-12%**
---			---	---	---	---	---	---	---	---
10,632	**SUPPLIES AND EXPENSES**		**341,350**	**4,590**	**10,632**	**326,128**	**8%**	**3%**	**(213,766)**	**-63%**
	PROFESSIONAL SERVICES									
	ENGINEERING	6015								
	CONSULTANT SERV/SURVEY	6020								
	OTHER PROFESSIONAL SER	6049	3,000			3,000	8%	0%	(3,000)	-100%
---			---	---	---	---	---	---	---	---
	PROFESSIONAL SERVICE		**3,000**			**3,000**	**8%**	**0%**	**(3,000)**	**-100%**
	COMMUNICATIONS									
	TELEPHONE AND TELEGRAP	6060								
	POSTAGE	6070								
---			---	---	---	---	---	---	---	---
	COMMUNICATIONS									
	TRANSPORTATION									
	TRAVEL EXPENSE	6110	115			115	8%	0%	(115)	-100%
	FREIGHT	6120								

CITY OF HATTIESBURG
001220 - GENERAL FUND-SANITATION DIV.
EXPENDITURE REPORT
1 Months Ending 10/31/12

THIS MONTH ACTUAL		OBJ/SUB	ANNUAL BUDGET	OPEN PO & CONTRACTS	YTD ACTUAL	REMAINING BALANCE	PERCENT PLAN	PERCENT ACTUAL	....PROJECTED.... OVER/UNDER	%
	TRANSPORTATION		**115**			**115**	**8%**	**0%**	**(115)**	**-100%**
	ADVERTISING									
	ADVERTISING	6150								
	ADVERTISING									
	PRINTING AND BINDING									
	FILM PROCESSING	6240								
	PRINTING AND BINDING									
	INSURANCE									
	PUBLIC LIAB/PROPERTY D	6255								
	AUTOMOBILE INSURANCE	6265								
	INSURANCE									
	UTILITIES									
409	ELECTRICITY	6305	5,500		409	5,091	8%	7%	(592)	-11%
	WATER	6315								
409	**UTILITIES**		**5,500**		**409**	**5,091**	**8%**	**7%**	**(592)**	**-11%**
	REPR/MAINT-OUTSIDE LABO									
	PLUMBING EQUIPMENT R&M	6357								
	OFFICE EQUIPMENT R&M	6365								
	FIXED EQUIPMENT R&M	6380								
	MINOR EQUIPMENT R&M	6382								
800	MOTOR VEHICLE EQ. R&M	6384	100,000	8,773	800	90,427	8%	1%	(90,400)	-90%
	COMMUNICATION EQ. R&M	6390								
450	TOW IN CHARGES	6398	3,000	500	450	2,050	8%	15%	2,400	80%
	OTHER REPAIRS AND MAIN	6399	1,950			1,950	8%	0%	(1,950)	-100%
1,250	**REPR/MAINT-OUTSIDE L**		**104,950**	**9,273**	**1,250**	**94,427**	**8%**	**1%**	**(89,950)**	**-86%**
	RENTALS									
	LAND RENT	6400								
557	UNIFORM RENT	6430	15,500		557	14,943	8%	4%	(8,816)	-57%
70	MOP-MAT-RAG RENT	6435	800		70	730	8%	9%	40	5%
627	**RENTALS**		**16,300**		**627**	**15,673**	**8%**	**4%**	**(8,776)**	**-54%**

			CITY OF HATTIESBURG							
	001220 - GENERAL FUND-SANITATION DIV.		EXPENDITURE REPORT							
			1 Months Ending 10/31/12							
THIS MONTH			ANNUAL	OPEN PO	YTD	REMAINING	PERCENT		....PROJECTED....	
ACTUAL		OBJ/SUB	BUDGET	& CONTRACTS	ACTUAL	BALANCE	PLAN	ACTUAL	OVER/UNDER	%
	OTHER SERVICES & CHARGE									
44,605	TIPPING FEES	6880	636,000		44,605	591,395	8%	7%	(100,740)	-16%
	TIPPING/DISPOSAL OTHER	6885	100,000			100,000	8%	0%	(100,000)	-100%
24,940	RECYCLING FEES	6890	89,000		24,940	64,060	8%	28%	210,280	236%
	SERVICES NOT SPECIFIED	6999								
---			---	---	---	---	---	---	---	---
69,545	**OTHER SERVICES & CHA**		**825,000**		**69,545**	**755,455**	**8%**	**8%**	**9,540**	**1%**
---			---	---	---	---	---	---	---	---
71,831	**OTHER SERVICES & CHAR**		**954,865**	**9,273**	**71,831**	**873,762**	**8%**	**8%**	**(92,893)**	**-10%**
	_____									
	LAND									
	LEASEHOLDS	7020								
---			---	---	---	---	---	---	---	---
	LAND									
	BUILDING/BLD IMPROVEMEN									
	BUILDINGS	7100								
	PUB.SERV./SANITA.BLDG	7100 18								
---			---	---	---	---	---	---	---	---
	BUILDINGS									
	BUILDING IMPROVEMENTS	7150								
	PUB.SERV./SANITA.BLDG	7150 38								
---			---	---	---	---	---	---	---	---
	BUILDING IMPROVEMEN									
---			---	---	---	---	---	---	---	---
	BUILDING/BLD IMPROVE									
	IMPROVEMENT OTHER THAN									
	OTHER IMPROVEMENTS	7295								
---			---	---	---	---	---	---	---	---
	IMPROVEMENT OTHER TH									
	MACHINERY AND EQUIPMENT									
	OFFICE FURN/EQUIP.	7325								
	PLANT EQUIPMENT	7340								
	COMMUNICATION EQUIPMEN	7355								
	OTHER EQUIPMENT	7399								
---			---	---	---	---	---	---	---	---
	MACHINERY AND EQUIPM									
	VEHICLES									

			CITY OF HATTIESBURG							
	001220 - GENERAL FUND-SANITATION DIV.		EXPENDITURE REPORT							
			1 Months Ending 10/31/12							
THIS MONTH			ANNUAL	OPEN PO	YTD	REMAINING	PERCENT		....PROJECTED....	
ACTUAL		OBJ/SUB	BUDGET	& CONTRACTS	ACTUAL	BALANCE	PLAN	ACTUAL	OVER/UNDER	%
	PICK UP TRUCKS	7420								
	HEAVY TRUCKS	7430								
	SANITATION TRUCKS	7460								
---			---	---	---	---	---	---	---	---
	VEHICLES									
---			---	---	---	---	---	---	---	---
	CAPITAL OUTLAY									
---			---	---	---	---	---	---	---	---
160,651	**EXPENDITURES**		**2,574,514**	**13,863**	**160,651**	**2,400,001**	**8%**	**6%**	**(646,702)**	**-25%**

CITY OF HATTIESBURG
001221 - GENERAL FUND-STREET CLEANING
EXPENDITURE REPORT
1 Months Ending 10/31/12

THIS MONTH ACTUAL		OBJ/SUB	ANNUAL BUDGET	OPEN PO & CONTRACTS	YTD ACTUAL	REMAINING BALANCE	PERCENT PLAN	PERCENT ACTUAL	....PROJECTED.... OVER/UNDER	%
	SALARIES									
3,128	REGULAR WAGES	4000	40,660		3,128	37,532	8%	8%	(3,124)	-8%
	DISASTER RECOVERY WAGE	4010								
	OVERTIME	4300	1,000			1,000	8%	0%	(1,000)	-100%
	DISASTER RECOVERY OVER	4310								
3,128	**SALARIES**		**41,660**		**3,128**	**38,532**	**8%**	**8%**	**(4,124)**	**-10%**
	EMPLOYEE BENEFITS									
446	STATE RETIREMENT	4600	5,310		446	4,864	8%	8%	42	1%
234	F.I.C.A. TAXES	4700	3,190		234	2,956	8%	7%	(382)	-12%
776	HOSPITALIZATION INS.	4800	10,440		776	9,664	8%	7%	(1,128)	-11%
	UNEMPLOYMENT BENEFITS	4900								
	WORKMAN'S COMPENSATION	4910	3,120			3,120	8%	0%	(3,120)	-100%
1,456	**EMPLOYEE BENEFITS**		**22,060**		**1,456**	**20,604**	**8%**	**7%**	**(4,588)**	**-21%**
4,583	**PERSONAL SERVICES**		**63,720**		**4,583**	**59,137**	**8%**	**7%**	**(8,724)**	**-14%**
	OPERATING SUPPLIES									
	GAS AND OIL	5250	1,500			1,500	8%	0%	(1,500)	-100%
	LUBRICANTS	5255	300			300	8%	0%	(300)	-100%
	DIESEL FUEL	5257	6,500			6,500	8%	0%	(6,500)	-100%
	WEARING APPAREL	5355								
	HAND TOOLS	5450								
	MINOR EQUIPMENT	5460								
	OTHER OPERATING MATL/S	5590								
	OPERATING SUPPLIES		**8,300**			**8,300**	**8%**	**0%**	**(8,300)**	**-100%**
	REPAIR & MAINTENANCE SP									
	PAINT AND PAINTING SPL	5650								
	MTR VEHICLE REP. PTS/S	5700	16,500	328		16,172	8%	0%	(16,500)	-100%
	REPAIR & MAINTENANCE		**16,500**	**328**		**16,172**	**8%**	**0%**	**(16,500)**	**-100%**
	SUPPLIES AND EXPENSES		**24,800**	**328**		**24,472**	**8%**	**0%**	**(24,800)**	**-100%**

			CITY OF HATTIESBURG							
	001221 - GENERAL FUND-STREET CLEANING		EXPENDITURE REPORT							
			1 Months Ending 10/31/12							
THIS MONTH			ANNUAL	OPEN PO	YTD	REMAINING	PERCENT		....PROJECTED....	
ACTUAL		OBJ/SUB	BUDGET	& CONTRACTS	ACTUAL	BALANCE	PLAN	ACTUAL	OVER/UNDER	%
	_____									
	TRANSPORTATION									
	FREIGHT	6120								
---			---	---	---	---	---	---	---	---
	TRANSPORTATION									
	ADVERTISING									
	ADVERTISING	6150								
---			---	---	---	---	---	---	---	---
	ADVERTISING									
	INSURANCE									
	PUBLIC LIAB/PROPERTY D	6255								
	AUTOMOBILE INSURANCE	6265								
---			---	---	---	---	---	---	---	---
	INSURANCE									
	REPR/MAINT-OUTSIDE LABO									
	MOTOR VEHICLE EQ. R&M	6384	10,000			10,000	8%	0%	(10,000)	-100%
	COMMUNICATION EQ. R&M	6390								
	TOW IN CHARGES	6398	250			250	8%	0%	(250)	-100%
---			---	---	---	---	---	---	---	---
	REPR/MAINT-OUTSIDE L		**10,250**			**10,250**	**8%**	**0%**	**(10,250)**	**-100%**
	RENTALS									
153	UNIFORM RENT	6430	850		153	697	8%	18%	986	116%
---			---	---	---	---	---	---	---	---
153	**RENTALS**		**850**		**153**	**697**	**8%**	**18%**	**986**	**116%**
	OTHER SERVICES & CHARGE									
	SERVICES NOT SPECIFIED	6999								
---			---	---	---	---	---	---	---	---
	OTHER SERVICES & CHA									
---			---	---	---	---	---	---	---	---
153	**OTHER SERVICES & CHAR**		**11,100**		**153**	**10,947**	**8%**	**1%**	**(9,264)**	**-83%**
	_____									
	BUILDING/BLD IMPROVEMEN									
	BUILDINGS	7100								
	PUB.SERV./SANITA.BLDG	7100 18								
---			---	---	---	---	---	---	---	---
	BUILDINGS									
---			---	---	---	---	---	---	---	---

			CITY OF HATTIESBURG							
	001221 - GENERAL FUND-STREET CLEANING		EXPENDITURE REPORT							
			1 Months Ending 10/31/12							
THIS MONTH			ANNUAL	OPEN PO	YTD	REMAINING	PERCENT		....PROJECTED....	
ACTUAL		OBJ/SUB	BUDGET	& CONTRACTS	ACTUAL	BALANCE	PLAN	ACTUAL	OVER/UNDER	%
	BUILDING/BLD IMPROVE									
	VEHICLES									
	PICK UP TRUCKS	7420								
	HEAVY TRUCKS	7430								
	SPECIAL TRUCKS	7450		204,793		(204,793)				
---			---	---	---	---	---	---	---	---
	VEHICLES			**204,793**		**(204,793)**				
---			---	---	---	---	---	---	---	---
	CAPITAL OUTLAY			**204,793**		**(204,793)**				
---			---	---	---	---	---	---	---	---
4,736	**EXPENDITURES**		**99,620**	**205,121**	**4,736**	**(110,237)**	**8%**	**5%**	**(42,788)**	**-43%**

CITY OF HATTIESBURG
001250 - GENERAL FUND-HEALTH DIVISION
EXPENDITURE REPORT
1 Months Ending 10/31/12

THIS MONTH ACTUAL		OBJ/SUB	ANNUAL BUDGET	OPEN PO & CONTRACTS	YTD ACTUAL	REMAINING BALANCE	PERCENT PLAN	PERCENT ACTUAL	....PROJECTED.... OVER/UNDER	%
	SALARIES									
19,002	REGULAR WAGES	4000	265,719		19,002	246,717	8%	7%	(37,695)	-14%
	DISASTER RECOVERY WAGE	4010								
955	OVERTIME	4300	6,000		955	5,045	8%	16%	5,460	91%
	DISASTER RECOVERY OVER	4310								
---			---	---	---	---	---	---	---	---
19,957	**SALARIES**		**271,719**		**19,957**	**251,762**	**8%**	**7%**	**(32,235)**	**-12%**
	EMPLOYEE BENEFITS									
2,846	STATE RETIREMENT	4600	38,750		2,846	35,904	8%	7%	(4,598)	-12%
1,500	F.I.C.A. TAXES	4700	20,795		1,500	19,296	8%	7%	(2,795)	-13%
4,268	HOSPITALIZATION INS.	4800	62,640		4,268	58,372	8%	7%	(11,424)	-18%
	UNEMPLOYMENT BENEFITS	4900								
	WORKMAN'S COMPENSATION	4910	12,000			12,000	8%	0%	(12,000)	-100%
---			---	---	---	---	---	---	---	---
8,613	**EMPLOYEE BENEFITS**		**134,185**		**8,613**	**125,572**	**8%**	**6%**	**(30,829)**	**-23%**
---			---	---	---	---	---	---	---	---
28,571	**PERSONAL SERVICES**		**405,904**		**28,571**	**377,333**	**8%**	**7%**	**(63,052)**	**-16%**
	OFFICE SUPPLIES									
	OTHER EXPENDABLE OFF.S	5010								
---			---	---	---	---	---	---	---	---
	OFFICE SUPPLIES									
	OPERATING SUPPLIES									
	MEDICAL SUPPLIES	5120								
4,711	CHEMICALS	5130	105,000		4,711	100,289	8%	4%	(48,468)	-46%
	CHEMICALS-MOSQUITO GRA	5135								
	GAS AND OIL	5250	22,500			22,500	8%	0%	(22,500)	-100%
	LUBRICANTS	5255								
	DIESEL FUEL	5257	3,000			3,000	8%	0%	(3,000)	-100%
	OTHER FUEL	5260								
667	WEARING APPAREL	5355	700		667	33	8%	95%	7,304	43%
	HAND TOOLS	5450	700			700	8%	0%	(700)	-100%
241	MINOR EQUIPMENT	5460	4,000		241	3,759	8%	6%	(1,108)	-28%
	HAZ.MAT SUP-DOMESTIC P	5466								
198	OTHER OPERATING MATL/S	5590	1,500		198	1,302	8%	13%	876	58%

CITY OF HATTIESBURG
001250 - GENERAL FUND-HEALTH DIVISION
EXPENDITURE REPORT
1 Months Ending 10/31/12

THIS MONTH ACTUAL		OBJ/SUB	ANNUAL BUDGET	OPEN PO & CONTRACTS	YTD ACTUAL	REMAINING BALANCE	PERCENT PLAN	PERCENT ACTUAL	....PROJECTED.... OVER/UNDER	%
5,816	**OPERATING SUPPLIES**		**137,400**		**5,816**	**131,584**	**8%**	**4%**	**(67,608)**	**-49%**
	REPAIR & MAINTENANCE SP									
	ELECTRICAL SUPPLIES	5605								
	PLUMBING SUPPLIES	5610								
	PAINT AND PAINTING SPL	5650								
	MTR VEHICLE REP. PTS/S	5700	4,000			4,000	8%	0%	(4,000)	-100%
	COMMUNICATION REPAIR P	5750								
	AGRICLTRL REPAIR PTS/S	5755	2,500			2,500	8%	0%	(2,500)	-100%
	REPAIR & MAINTENANCE		**6,500**			**6,500**	**8%**	**0%**	**(6,500)**	**-100%**
5,816	**SUPPLIES AND EXPENSES**		**143,900**		**5,816**	**138,084**	**8%**	**4%**	**(74,108)**	**-51%**
	PROFESSIONAL SERVICES									
	OTHER PROFESSIONAL SER	6049	400			400	8%	0%	(400)	-100%
	PROFESSIONAL SERVICE		**400**			**400**	**8%**	**0%**	**(400)**	**-100%**
	TRANSPORTATION									
	TRAVEL EXPENSE	6110								
	TRVL EXP-MOSQUITO GRAN	6111								
	FREIGHT	6120								
	TRANSPORTATION									
	ADVERTISING									
	ADVERTISING	6150								
	ADVERTISING									
	PRINTING AND BINDING									
	PRINTING-GRANT RELATED	6202								
	PRINTING AND BINDING									
	INSURANCE									
	PUBLIC LIAB/PROPERTY D	6255								
	AUTOMOBILE INSURANCE	6265								
	INSURANCE									

			CITY OF HATTIESBURG							
	001250 - GENERAL FUND-HEALTH DIVISION		EXPENDITURE REPORT							
			1 Months Ending 10/31/12							
THIS MONTH			ANNUAL	OPEN PO	YTD	REMAINING	PERCENT		....PROJECTED....	
ACTUAL		OBJ/SUB	BUDGET	& CONTRACTS	ACTUAL	BALANCE	PLAN	ACTUAL	OVER/UNDER	%
	REPR/MAINT-OUTSIDE LABO									
	MINOR EQUIPMENT R&M	6382	800			800	8%	0%	(800)	-100%
	MOTOR VEHICLE EQ. R&M	6384	4,900			4,900	8%	0%	(4,900)	-100%
	AGRICULTURAL EQ. R&M	6387	500			500	8%	0%	(500)	-100%
	COMMUNICATION EQ. R&M	6390								
	TOW IN CHARGES	6398	150			150	8%	0%	(150)	-100%
---			---	---	---	---	---	---	---	---
	REPR/MAINT-OUTSIDE L		**6,350**			**6,350**	**8%**	**0%**	**(6,350)**	**-100%**
	RENTALS									
80	UNIFORM RENT	6430	1,500		80	1,420	8%	5%	(540)	-36%
---			---	---	---	---	---	---	---	---
80	**RENTALS**		**1,500**		**80**	**1,420**	**8%**	**5%**	**(540)**	**-36%**
	OTHER SERVICES & CHARGE									
	REGISTRATION FEE/TUITI	6845	400			400	8%	0%	(400)	-100%
	SERVICES NOT SPECIFIED	6999								
---			---	---	---	---	---	---	---	---
	OTHER SERVICES & CHA		**400**			**400**	**8%**	**0%**	**(400)**	**-100%**
---			---	---	---	---	---	---	---	---
80	**OTHER SERVICES & CHAR**		**8,650**		**80**	**8,570**	**8%**	**1%**	**(7,690)**	**-89%**
	_____									
	MACHINERY AND EQUIPMENT									
	AGRICULTURAL EQUIPMENT	7335								
	EQUIP-MOSQUITO GRANT	7377								
	OTHER EQUIPMENT	7399								
---			---	---	---	---	---	---	---	---
	MACHINERY AND EQUIPM									
	VEHICLES									
	PICK UP TRUCKS	7420								
	DUMP TRUCKS	7440								
	SPECIAL TRUCKS	7450								
---			---	---	---	---	---	---	---	---
	VEHICLES									
---			---	---	---	---	---	---	---	---
	CAPITAL OUTLAY									
---			---	---	---	---	---	---	---	---
34,467	**EXPENDITURES**		**558,454**		**34,467**	**523,987**	**8%**	**6%**	**(144,850)**	**-26%**

CITY OF HATTIESBURG
001260 - GENERAL FUND-ANIMAL CONTROL
EXPENDITURE REPORT
1 Months Ending 10/31/12

THIS MONTH ACTUAL		OBJ/SUB	ANNUAL BUDGET	OPEN PO & CONTRACTS	YTD ACTUAL	REMAINING BALANCE	PERCENT PLAN	PERCENT ACTUAL	....PROJECTED.... OVER/UNDER	%
	SALARIES									
3,733	REGULAR WAGES	4000	82,854		3,733	79,121	8%	5%	(38,058)	-46%
	DISASTER RECOVERY WAGE	4010								
147	OVERTIME	4300	3,000		147	2,853	8%	5%	(1,236)	-41%
	DISASTER RECOVERY OVER	4310								
---			---	---	---	---	---	---	---	---
3,880	**SALARIES**		**85,854**		**3,880**	**81,974**	**8%**	**5%**	**(39,294)**	**-46%**
	EMPLOYEE BENEFITS									
553	STATE RETIREMENT	4600	12,245		553	11,692	8%	5%	(5,609)	-46%
288	F.I.C.A. TAXES	4700	6,570		288	6,282	8%	4%	(3,114)	-47%
776	HOSPITALIZATION INS.	4800	20,880		776	20,104	8%	4%	(11,568)	-55%
	UNEMPLOYMENT BENEFITS	4900								
	WORKMAN'S COMPENSATION	4910	1,050			1,050	8%	0%	(1,050)	-100%
---			---	---	---	---	---	---	---	---
1,617	**EMPLOYEE BENEFITS**		**40,745**		**1,617**	**39,128**	**8%**	**4%**	**(21,341)**	**-52%**
---			---	---	---	---	---	---	---	---
5,497	**PERSONAL SERVICES**		**126,599**		**5,497**	**121,102**	**8%**	**4%**	**(60,635)**	**-48%**
	OFFICE SUPPLIES									
	PAPER	5003	100			100	8%	0%	(100)	-100%
	PRINTED FORMS	5005								
	OTHER EXPENDABLE OFF.S	5010	200			200	8%	0%	(200)	-100%
	MINOR OFFICE EQUIP/FUR	5020								
	PHOTO SUPPLIES	5040								
	SUBSCRIPTIONS,MAGS,MAP	5050								
	BOOKS	5070								
	COMPUTER SUPPLIES	5080	200			200	8%	0%	(200)	-100%
---			---	---	---	---	---	---	---	---
	OFFICE SUPPLIES		**500**			**500**	**8%**	**0%**	**(500)**	**-100%**
	OPERATING SUPPLIES									
	CLEANING/JANITORIAL SP	5100	250			250	8%	0%	(250)	-100%
	HOUSEHOLD SUPPLIES	5110								
	FOOD	5115								
	MEDICAL SUPPLIES	5120								
	CHEMICALS	5130								

			CITY OF HATTIESBURG							
	001260 - GENERAL FUND-ANIMAL CONTROL		EXPENDITURE REPORT							
			1 Months Ending 10/31/12							
THIS MONTH			ANNUAL	OPEN PO	YTD	REMAINING	PERCENT		....PROJECTED....	
ACTUAL		OBJ/SUB	BUDGET	& CONTRACTS	ACTUAL	BALANCE	PLAN	ACTUAL	OVER/UNDER	%
	GAS AND OIL	5250	16,000			16,000	8%	0%	(16,000)	-100%
	LUBRICANTS	5255								
	WEARING APPAREL	5355	1,800			1,800	8%	0%	(1,800)	-100%
	HORT./LANDSCAPING SPLY	5440								
	HAND TOOLS	5450								
	MINOR EQUIPMENT	5460	1,800			1,800	8%	0%	(1,800)	-100%
	OTHER OPERATING MATL/S	5590	500			500	8%	0%	(500)	-100%
---			---	---	---	---	---	---	---	---
	OPERATING SUPPLIES		**20,350**			**20,350**	**8%**	**0%**	**(20,350)**	**-100%**
	REPAIR & MAINTENANCE SP									
	BUILDING MATERIALS & S	5600								
	ELECTRICAL SUPPLIES	5605								
	PLUMBING SUPPLIES	5610								
	STRUCTURAL STEEL & IRO	5620								
	PAINT AND PAINTING SPL	5650								
	MTR VEHICLE REP. PTS/S	5700	3,000			3,000	8%	0%	(3,000)	-100%
	COMMUNICATION REPAIR P	5750								
	OTHER REPAIR/MAINT. SP	5990	100			100	8%	0%	(100)	-100%
---			---	---	---	---	---	---	---	---
	REPAIR & MAINTENANCE		**3,100**			**3,100**	**8%**	**0%**	**(3,100)**	**-100%**
---			---	---	---	---	---	---	---	---
	SUPPLIES AND EXPENSES		**23,950**			**23,950**	**8%**	**0%**	**(23,950)**	**-100%**
	PROFESSIONAL SERVICES									
	VETERINARIAN	6030	2,500			2,500	8%	0%	(2,500)	-100%
	OTHER PROFESSIONAL SER	6049								
---			---	---	---	---	---	---	---	---
	PROFESSIONAL SERVICE		**2,500**			**2,500**	**8%**	**0%**	**(2,500)**	**-100%**
	COMMUNICATIONS									
32	TELEPHONE AND TELEGRAP	6060	650		32	618	8%	5%	(266)	-41%
	POSTAGE	6070								
---			---	---	---	---	---	---	---	---
32	**COMMUNICATIONS**		**650**		**32**	**618**	**8%**	**5%**	**(266)**	**-41%**
	TRANSPORTATION									
	TRAVEL EXPENSE	6110	500			500	8%	0%	(500)	-100%
	FREIGHT	6120								
	MESSENGER/EXPRESS SERV	6130								

			CITY OF HATTIESBURG							
	001260 - GENERAL FUND-ANIMAL CONTROL		EXPENDITURE REPORT							
			1 Months Ending 10/31/12							
THIS MONTH			ANNUAL	OPEN PO	YTD	REMAINING	PERCENT		....PROJECTED....	
ACTUAL		OBJ/SUB	BUDGET	& CONTRACTS	ACTUAL	BALANCE	PLAN	ACTUAL	OVER/UNDER	%
---			---	---	---	---	---	---	---	---
	TRANSPORTATION		**500**			**500**	**8%**	**0%**	**(500)**	**-100%**
	ADVERTISING									
	ADVERTISING	6150								
---			---	---	---	---	---	---	---	---
	ADVERTISING									
	PRINTING AND BINDING									
	PRINTING	6200								
---			---	---	---	---	---	---	---	---
	PRINTING AND BINDING									
	INSURANCE									
	AUTOMOBILE INSURANCE	6265								
---			---	---	---	---	---	---	---	---
	INSURANCE									
	REPR/MAINT-OUTSIDE LABO									
	BUILDING R&M	6350								
	ELECTRICAL R&M	6355								
	PLUMBING EQUIPMENT R&M	6357								
	OFFICE EQUIPMENT R&M	6365								
	HOUSEHOLD EQUIPMENT R&	6370								
	FIXED EQUIPMENT R&M	6380								
	MINOR EQUIPMENT R&M	6382								
	MOTOR VEHICLE EQ. R&M	6384	1,500			1,500	8%	0%	(1,500)	-100%
	COMMUNICATION EQ. R&M	6390								
	CLEANING AND PAINTING	6392								
	DISINFECT./EXTERMINATI	6394								
	SIGN PAINTING	6396								
	TOW IN CHARGES	6398	100			100	8%	0%	(100)	-100%
	OTHER REPAIRS AND MAIN	6399	100			100	8%	0%	(100)	-100%
---			---	---	---	---	---	---	---	---
	REPR/MAINT-OUTSIDE L		**1,700**			**1,700**	**8%**	**0%**	**(1,700)**	**-100%**
	RENTALS									
	OTHER RENT	6449								
---			---	---	---	---	---	---	---	---
	RENTALS									
	OTHER SERVICES & CHARGE									
	DUES AND MEMBERSHIPS	6840	125			125	8%	0%	(125)	-100%

			CITY OF HATTIESBURG							
	001260 - GENERAL FUND-ANIMAL CONTROL		EXPENDITURE REPORT							
			1 Months Ending 10/31/12							
THIS MONTH			ANNUAL	OPEN PO	YTD	REMAINING	PERCENT		....PROJECTED....	
ACTUAL		OBJ/SUB	BUDGET	& CONTRACTS	ACTUAL	BALANCE	PLAN	ACTUAL	OVER/UNDER	%
	REGISTRATION FEE/TUITI	6845	350			350	8%	0%	(350)	-100%
9,374	SERVICES NOT SPECIFIED	6999	117,248		9,374	107,874	8%	8%	(4,760)	-4%
---			---	---	---	---	---	---	---	---
9,374	**OTHER SERVICES & CHA**		**117,723**		**9,374**	**108,349**	**8%**	**8%**	**(5,235)**	**-4%**
---			---	---	---	---	---	---	---	---
9,406	**OTHER SERVICES & CHAR**		**123,073**		**9,406**	**113,667**	**8%**	**8%**	**(10,201)**	**-8%**
	MACHINERY AND EQUIPMENT									
	HOUSEHOLD FURN/EQUIP.	7320								
	OFFICE FURN/EQUIP.	7325								
	DATA PROCESSING EQUIP.	7327								
	COMMUNICATION EQUIPMEN	7355								
	OTHER EQUIPMENT	7399								
---			---	---	---	---	---	---	---	---
	MACHINERY AND EQUIPM									
	VEHICLES									
	AUTOMOBILES	7400								
	PICK UP TRUCKS	7420								
---			---	---	---	---	---	---	---	---
	VEHICLES									
---			---	---	---	---	---	---	---	---
	CAPITAL OUTLAY									
---			---	---	---	---	---	---	---	---
14,903	**EXPENDITURES**		**273,622**		**14,903**	**258,719**	**8%**	**5%**	**(94,786)**	**-35%**

			CITY OF HATTIESBURG							
	001280 - GENERAL FUND-HUMAN/SOC.ASST		EXPENDITURE REPORT							
			1 Months Ending 10/31/12							
THIS MONTH			ANNUAL	OPEN PO	YTD	REMAINING	PERCENT		....PROJECTED....	
ACTUAL		OBJ/SUB	BUDGET	& CONTRACTS	ACTUAL	BALANCE	PLAN	ACTUAL	OVER/UNDER	%
	OTHER SERVICES & CHARGE									
	CONTRIBUTIONS	6820								
	SEXUAL ASSUALT CRISIS	6820 04								
	P.A.C.E.	6820 05								
	INTERACTION FACTORY	6820 06								
	DOMESTIC ABUSE FAMILY	6820 07	3,500			3,500	8%	0%	(3,500)	-100%
	FORREST CTY. HEALTH D	6820 08								
	NAT'L.GUARD ARMORY	6820 09								
	COUNCIL ON AGING	6820 10								
	BOY SCOUTS OF AMERICA	6820 11								
	PINE BELT MENTAL HEAL	6820 12								
	H'BURG. CONCERT BAND	6820 13								
	LIVESTOCK SHOW	6820 14								
	COURT APP'T SPEC.ADVO	6820 15								
	H'BURG.ED.LITERACY PR	6820 16								
	D.R.E.A.M.	6820 17								
	SALVATION ARMY BOYS/G	6820 18								
	H'BURG.ED.FOUNDATION	6820 19								
	N.E.E.D.S.	6820 20								
	CENTER FOR GIFTED STU	6820 21								
	RAILS TO TRAILS	6820 22	101,000			101,000	8%	0%	(101,000)	-100%
	CTR FOR CHILD ABUSE P	6820 23								
	SO.CTRL.MS.AMER.RED C	6820 24	5,000			5,000	8%	0%	(5,000)	-100%
	UNIFIED NEIGHBORHOOD	6820 25								
	GULF PINES GIRL SCOUT	6820 26								
	USM COMM.SERVICE LEAR	6820 27								
	BIG BRO/BIG SIS OF SE	6820 28								
	HBRG CIVIC CHORUS/CON	6820 29								
	MS HOLIDAY SPECTACULA	6820 30								
	CORNERSTONE PROJECT	6820 31								
	SALVATION ARMY	6820 32								
	SO MS CHILDREN'S CTR	6820 33								
	CHRISTIAN SERVICES	6820 34								
	USM/DISABILITY STUDIE	6820 35								
	NEW TEST.YOUTH SAFE H	6820 36								

			CITY OF HATTIESBURG							
	001280 - GENERAL FUND-HUMAN/SOC.ASST		EXPENDITURE REPORT							
			1 Months Ending 10/31/12							
THIS MONTH			ANNUAL	OPEN PO	YTD	REMAINING	PERCENT		....PROJECTED....	
ACTUAL		OBJ/SUB	BUDGET	& CONTRACTS	ACTUAL	BALANCE	PLAN	ACTUAL	OVER/UNDER	%
	USM/SYMPHONY	6820 37	50,000			50,000	8%	0%	(50,000)	-100%
	USM/DUBARD SCHOOL	6820 38								
	GREATER H'BURG COMMUN	6820 39								
	WORLD CHANGERS	6820 40								
	UNALLOCATED CONTRIBUT	6820 99								
---			---	---	---	---	---	---	---	---
	CONTRIBUTIONS		**159,500**			**159,500**	**8%**	**0%**	**(159,500)**	**-100%**
---			---	---	---	---	---	---	---	---
	OTHER SERVICES & CHA		**159,500**			**159,500**	**8%**	**0%**	**(159,500)**	**-100%**
---			---	---	---	---	---	---	---	---
	OTHER SERVICES & CHAR		**159,500**			**159,500**	**8%**	**0%**	**(159,500)**	**-100%**
---			---	---	---	---	---	---	---	---
	EXPENDITURES		**159,500**			**159,500**	**8%**	**0%**	**(159,500)**	**-100%**

			CITY OF HATTIESBURG							
	001402 - GENERAL FUND-ECONOMICDEV.		EXPENDITURE REPORT							
			1 Months Ending 10/31/12							
THIS MONTH			ANNUAL	OPEN PO	YTD	REMAINING	PERCENT		....PROJECTED....	
ACTUAL		OBJ/SUB	BUDGET	& CONTRACTS	ACTUAL	BALANCE	PLAN	ACTUAL	OVER/UNDER	%
	PROFESSIONAL SERVICES									
	OTHER PROFESSIONAL SER	6049								
---			---	---	---	---	---	---	---	---
	PROFESSIONAL SERVICE									
	TRANSPORTATION									
	TRAVEL-ALL AMER.CITY A	6110								
---			---	---	---	---	---	---	---	---
	TRANSPORTATION									
	REPR/MAINT-OUTSIDE LABO									
	BUILDING R&M	6350								
---			---	---	---	---	---	---	---	---
	REPR/MAINT-OUTSIDE L									
	OTHER SERVICES & CHARGE									
	CONTRIBUTIONS	6820								
	FCIPC/AREA DEV. PRTNR	6820 01	130,000			130,000	8%	0%	(130,000)	-100%
	PRCC TECH CENTER	6820 02								
	FCIPC/ECONOMIC DEVEL.	6820 03								
	H'BURG DOWNTOWN ASSN	6820 37	30,000			30,000	8%	0%	(30,000)	-100%
	CAMP SHELBY STUDY	6820 45								
	PHWD-FEASIBILITY STUD	6820 50								
---			---	---	---	---	---	---	---	---
	CONTRIBUTIONS		**160,000**			**160,000**	**8%**	**0%**	**(160,000)**	**-100%**
---			---	---	---	---	---	---	---	---
	OTHER SERVICES & CHA		**160,000**			**160,000**	**8%**	**0%**	**(160,000)**	**-100%**
---			---	---	---	---	---	---	---	---
	OTHER SERVICES & CHAR		**160,000**			**160,000**	**8%**	**0%**	**(160,000)**	**-100%**
	BUILDING/BLD IMPROVEMEN									
	BUILDING IMPROVEMENTS	7150								
	DOWNTOWN PROJ-OLD LIB	7150 14								
	DEPOT PROJECT	7150 15								
	HUB CITY LOFTS PROJEC	7150 41								
---			---	---	---	---	---	---	---	---
	BUILDING IMPROVEMEN									
---			---	---	---	---	---	---	---	---

			CITY OF HATTIESBURG							
	001402 - GENERAL FUND-ECONOMICDEV.		EXPENDITURE REPORT							
			1 Months Ending 10/31/12							
THIS MONTH			ANNUAL	OPEN PO	YTD	REMAINING	PERCENT		....PROJECTED....	
ACTUAL		OBJ/SUB	BUDGET	& CONTRACTS	ACTUAL	BALANCE	PLAN	ACTUAL	OVER/UNDER	%
	BUILDING/BLD IMPROVE									
	VEHICLES									
	TROLLEYS	7415								
----------			---------	---------	---------	---------	-----	-----	--------	-----
	VEHICLES									
----------			---------	---------	---------	---------	-----	-----	--------	-----
	CAPITAL OUTLAY									
----------			---------	---------	---------	---------	-----	-----	--------	-----
	EXPENDITURES		**160,000**			**160,000**	**8%**	**0%**	**(160,000)**	**-100%**

			CITY OF HATTIESBURG							
	001460 - GENERAL FUND-CAPITAL LEASES		EXPENDITURE REPORT							
			1 Months Ending 10/31/12							
THIS MONTH			ANNUAL	OPEN PO	YTD	REMAINING	PERCENT		....PROJECTED....	
ACTUAL		OBJ/SUB	BUDGET	& CONTRACTS	ACTUAL	BALANCE	PLAN	ACTUAL	OVER/UNDER	%
	_____									
	_____									
	NOTE PRINCIPAL									
	2005 STORM NOTE	8205								
	SAENGER SERIES 1999 NO	8220								
	MDB CAPITAL PROJECTS	8223								
	MDB-DEPOT PROJ	8223 01								
	MDB-WTR/SWR LINES	8223 02								
	MDB-HPD RENOVATION	8223 03								
	MDB-592 PROG 2001A PO	8223 04								
	MDB-FIRE STA #1	8223 05								
1,797	MDB-CHURCH PROJ	8223 06	22,000		1,797	20,203	8%	8%	(436)	-2%
	MDB-4TH ST WIDENING	8223 07								
	MDB-CHAIN PARK	8223 08								
	MDB-HUB CITY LOFTS	8223 09	84,000			84,000	8%	0%	(84,000)	-100%
---			---	---	---	---	---	---	---	---
1,797	**MDB CAPITAL PROJECT**		**106,000**		**1,797**	**104,203**	**8%**	**2%**	**(84,436)**	**-80%**
	W&S USA YEAST 2002"B"N	8224	55,000			55,000	8%	0%	(55,000)	-100%
---			---	---	---	---	---	---	---	---
1,797	**NOTE PRINCIPAL**		**161,000**		**1,797**	**159,203**	**8%**	**1%**	**(139,436)**	**-87%**
	INTEREST ON NOTES									
	2005 STORM NOTE	8305								
	SAENGER SERIES 1999 NO	8331								
	MDB CAPITAL PROJECT NO	8333								
	MDB-DEPOT PROJ	8333 01								
	MDB-WTR/SWR LINES	8333 02								
	MDB-HPD RENOVATION	8333 03								
	MDB-592 PROG 2001A PO	8333 04								
	MDB-FIRE STA #1	8333 05								
433	MDB-CHURCH PROJ	8333 06	6,000		433	5,567	8%	7%	(804)	-13%
	MDB-4TH ST WIDENING	8333 07								
	MDB-CHAIN PARK	8333 08								
	MDB-HUB CITY LOFTS	8333 09	39,400			39,400	8%	0%	(39,400)	-100%
---			---	---	---	---	---	---	---	---
433	**MDB CAPITAL PROJECT**		**45,400**		**433**	**44,967**	**8%**	**1%**	**(40,204)**	**-89%**
	W&S USA YEAST 2002"B"N	8334	2,475			2,475	8%	0%	(2,475)	-100%
---			---	---	---	---	---	---	---	---

CITY OF HATTIESBURG
001460 - GENERAL FUND-CAPITAL LEASES
EXPENDITURE REPORT
1 Months Ending 10/31/12

THIS MONTH ACTUAL		OBJ/SUB	ANNUAL BUDGET	OPEN PO & CONTRACTS	YTD ACTUAL	REMAINING BALANCE	PERCENT PLAN	PERCENT ACTUAL	....PROJECTED.... OVER/UNDER	%
433	**INTEREST ON NOTES**		**47,875**		**433**	**47,442**	**8%**	**1%**	**(42,679)**	**-89%**
	CAPITAL LEASE PAYMENTS									
	COMPUTER LEASE-INFO.SY	8510								
	COMPUTER LEASE-POLICE	8511								
35,951	POLICE CARS LEASE	8512	553,000		35,951	517,049	8%	7%	(121,588)	-22%
	EMER GENERATORS LEASE	8513	415,930			415,930	8%	0%	(415,930)	-100%
	2012 EQUIP LEASE	8514								
	BUILDING LEASE	8515								
31,170	SANITATION TRUCKS LEAS	8520	351,220		31,170	320,050	8%	9%	22,820	6%
21,432	SANITATION CANS LEASE	8521	260,400		21,432	238,968	8%	8%	(3,216)	-1%
	SPECIAL TRUCKS LEASE	8523								
	DUMP TRUCK LEASE	8525								
	DOWNTOWN LIGHTING	8531								
---			---	---	---	---	---	---	---	---
88,554	**CAPITAL LEASE PAYMEN**		**1,580,550**		**88,554**	**1,491,996**	**8%**	**6%**	**(517,902)**	**-33%**
	INTEREST ON CAPITAL LEA									
	COMPUTER LEASE-INFO SY	8610								
	COMPUTER LEASE-POLICE	8611								
995	POLICE CARS LEASE	8612	12,000		995	11,005	8%	8%	(60)	-1%
	EMER GENERATORS LEASE	8613	78,750			78,750	8%	0%	(78,750)	-100%
	2012 EQUIP LEASE	8614								
	BUILDING LEASE	8615								
3,372	SANITATION TRUCKS LEAS	8620	34,700		3,372	31,328	8%	10%	5,764	17%
1,754	SANITATION CANS LEASE	8621	17,850		1,754	16,096	8%	10%	3,198	18%
	SPECIAL TRUCKS LEASE	8623								
	DUMP TRUCK LEASE	8625								
	DOWNTOWN LIGHTING	8631								
---			---	---	---	---	---	---	---	---
6,121	**INTEREST ON CAPITAL**		**143,300**		**6,121**	**137,179**	**8%**	**4%**	**(69,848)**	**-49%**
---			---	---	---	---	---	---	---	---
96,905	**DEBT SERVICE**		**1,932,725**		**96,905**	**1,835,820**	**8%**	**5%**	**(769,865)**	**-40%**
---			---	---	---	---	---	---	---	---
96,905	**EXPENDITURES**		**1,932,725**		**96,905**	**1,835,820**	**8%**	**5%**	**(769,865)**	**-40%**

			CITY OF HATTIESBURG							
	001500 - GENERAL FUND-TRANSFERS		EXPENDITURE REPORT							
			1 Months Ending 10/31/12							
THIS MONTH			ANNUAL	OPEN PO	YTD	REMAINING	PERCENT		....PROJECTED....	
ACTUAL		OBJ/SUB	BUDGET	& CONTRACTS	ACTUAL	BALANCE	PLAN	ACTUAL	OVER/UNDER	%
	_____									
	_____									
	TRANSFERS TO OTHER FUND									
	T/T PARKS & RECREATION	9000 02	2,102,234			2,102,234	8%	0%	(2,102,234)	-100%
	T/T MUN,FIRE PROTECTIO	9000 05								
	T/T SPECIAL STREET	9000 08								
	T/T 1994 GO-IND. DEVEL	9000 103								
	T/T GOVNMT. COMPLEX BL	9000 104								
	T/T UDAG PAYBACK	9000 108								
	T/T GROUP INSURANCE TR	9000 109								
	T/T CITY B & I	9000 13								
	T/T POL/FIRE DIS./RELI	9000 18								
	T/T 2003 TIF B&I-CHAUV	9000 22								
	T/T AIRPORT IMPROVEMEN	9000 39								
	T/T MASS TRANSIT OPER.	9000 73	335,000			335,000	8%	0%	(335,000)	-100%
	T/T W & S CONSTRUCTION	9000 75								
	T/T COMMUNITY CENTERS	9000 77	750,000			750,000	8%	0%	(750,000)	-100%
	T/T COMMUNITY DEVELOPM	9000 82								
	T/T '01 BOND CONSTR	9000 95								
	T/T MDB CAPITAL PROJ.F	9000 96								
	T/T KPZ CAPITAL	9000 98								
---			---	---	---	---	---	---	---	---
	TRANSFERS TO OTHER F		**3,187,234**			**3,187,234**	**8%**	**0%**	**(3,187,234)**	**-100%**
---			---	---	---	---	---	---	---	---
	TRANSFERS		**3,187,234**			**3,187,234**	**8%**	**0%**	**(3,187,234)**	**-100%**
---			---	---	---	---	---	---	---	---
	EXPENDITURES		**3,187,234**			**3,187,234**	**8%**	**0%**	**(3,187,234)**	**-100%**

CITY OF HATTIESBURG
001551 - GENERAL FUND-AIRPORT DIV.
EXPENDITURE REPORT
1 Months Ending 10/31/12

THIS MONTH ACTUAL		OBJ/SUB	ANNUAL BUDGET	OPEN PO & CONTRACTS	YTD ACTUAL	REMAINING BALANCE	PERCENT PLAN	PERCENT ACTUAL	....PROJECTED.... OVER/UNDER	%
	SALARIES									
4,960	REGULAR WAGES	4000	63,440		4,960	58,480	8%	8%	(3,920)	-6%
	DISASTER RECOVERY WAGE	4010								
516	OVERTIME	4300	1,000		516	484	8%	52%	5,192	519%
	DISASTER RECOVERY OVER	4310								
---			---	---	---	---	---	---	---	---
5,476	**SALARIES**		**64,440**		**5,476**	**58,964**	**8%**	**8%**	**1,272**	**2%**
	EMPLOYEE BENEFITS									
781	STATE RETIREMENT	4600	9,195		781	8,414	8%	8%	177	2%
414	F.I.C.A. TAXES	4700	4,935		414	4,521	8%	8%	33	1%
1,164	HOSPITALIZATION INS.	4800	15,660		1,164	14,496	8%	7%	(1,692)	-11%
	UNEMPLOYMENT BENEFITS	4900								
	WORKMAN'S COMPENSATION	4910	2,400			2,400	8%	0%	(2,400)	-100%
---			---	---	---	---	---	---	---	---
2,359	**EMPLOYEE BENEFITS**		**32,190**		**2,359**	**29,831**	**8%**	**7%**	**(3,882)**	**-12%**
---			---	---	---	---	---	---	---	---
7,835	**PERSONAL SERVICES**		**96,630**		**7,835**	**88,795**	**8%**	**8%**	**(2,610)**	**-3%**
	OPERATING SUPPLIES									
	CLEANING/JANITORIAL SP	5100	450			450	8%	0%	(450)	-100%
	CHEMICALS	5130	2,000			2,000	8%	0%	(2,000)	-100%
	GAS AND OIL	5250	7,000			7,000	8%	0%	(7,000)	-100%
	LUBRICANTS	5255	200			200	8%	0%	(200)	-100%
	DIESEL FUEL	5257	5,100			5,100	8%	0%	(5,100)	-100%
	ASPHALT & ASPHALT PROD	5400								
	CONCRETE, CEMENT, ETC.	5405								
	SAND,CLAY,GRVL,FILL DI	5415								
	HORT./LANDSCAPING SPLY	5440								
493	HAND TOOLS	5450	3,700	547	493	2,660	8%	13%	2,216	60%
1,320	MINOR EQUIPMENT	5460	7,203		1,320	5,883	8%	18%	8,637	120%
43	OTHER OPERATING MATL/S	5590	800		43	758	8%	5%	(284)	-36%
---			---	---	---	---	---	---	---	---
1,855	**OPERATING SUPPLIES**		**26,453**	**547**	**1,855**	**24,051**	**8%**	**7%**	**(4,193)**	**-16%**
	REPAIR & MAINTENANCE SP									
	BUILDING MATERIALS & S	5600	1,500	599		901	8%	0%	(1,500)	-100%

CITY OF HATTIESBURG
001551 - GENERAL FUND-AIRPORT DIV.
EXPENDITURE REPORT
1 Months Ending 10/31/12

THIS MONTH ACTUAL		OBJ/SUB	ANNUAL BUDGET	OPEN PO & CONTRACTS	YTD ACTUAL	REMAINING BALANCE	PERCENT PLAN	PERCENT ACTUAL	....PROJECTED.... OVER/UNDER	%
	ELECTRICAL SUPPLIES	5605	3,350			3,350	8%	0%	(3,350)	-100%
104	PLUMBING SUPPLIES	5610	1,355		104	1,251	8%	8%	(107)	-8%
	STRUCTURAL STEEL & IRO	5620	1,100			1,100	8%	0%	(1,100)	-100%
	PAINT AND PAINTING SPL	5650								
37	MTR VEHICLE REP. PTS/S	5700	3,600		37	3,563	8%	1%	(3,156)	-88%
	COMMUNICATION REPAIR P	5750								
	AGRICLTRL REPAIR PTS/S	5755	2,500			2,500	8%	0%	(2,500)	-100%
	EXPENDABLE WELDING SPL	5770	1,970			1,970	8%	0%	(1,970)	-100%
929	OTHER REPAIR/MAINT. SP	5990	14,370		929	13,441	8%	6%	(3,222)	-22%
---			---	---	---	---	---	---	---	---
1,070	**REPAIR & MAINTENANCE**		**29,745**	**599**	**1,070**	**28,076**	**8%**	**4%**	**(16,905)**	**-57%**
---			---	---	---	---	---	---	---	---
2,925	**SUPPLIES AND EXPENSES**		**56,198**	**1,146**	**2,925**	**52,127**	**8%**	**5%**	**(21,098)**	**-38%**
	_____									
	PROFESSIONAL SERVICES									
	APPRAISAL	6017								
	OTHER PROFESSIONAL SER	6049								
---			---	---	---	---	---	---	---	---
	PROFESSIONAL SERVICE									
	COMMUNICATIONS									
	TELEPHONE AND TELEGRAP	6060								
---			---	---	---	---	---	---	---	---
	COMMUNICATIONS									
	TRANSPORTATION									
	TRAVEL EXPENSE	6110								
---			---	---	---	---	---	---	---	---
	TRANSPORTATION									
	ADVERTISING									
	ADVERTISING	6150								
---			---	---	---	---	---	---	---	---
	ADVERTISING									
	PRINTING AND BINDING									
	PRINTING	6200								
---			---	---	---	---	---	---	---	---
	PRINTING AND BINDING									
	INSURANCE									
	FIRE & EXTENDED COVERA	6250								

CITY OF HATTIESBURG
001551 - GENERAL FUND-AIRPORT DIV.
EXPENDITURE REPORT
1 Months Ending 10/31/12

THIS MONTH ACTUAL		OBJ/SUB	ANNUAL BUDGET	OPEN PO & CONTRACTS	YTD ACTUAL	REMAINING BALANCE	PERCENT PLAN	PERCENT ACTUAL	....PROJECTED.... OVER/UNDER	%
	PUBLIC LIAB/PROPERTY D	6255								
	BOILER MACHINERY	6260								
	AUTOMOBILE INSURANCE	6265								
---			---	---	---	---	---	---	---	---
	INSURANCE									
	UTILITIES									
32	GAS	6300	1,500		32	1,468	8%	2%	(1,116)	-74%
1,426	ELECTRICITY	6305	11,000		1,426	9,574	8%	13%	6,112	56%
	WATER	6315								
---			---	---	---	---	---	---	---	---
1,457	**UTILITIES**		**12,500**		**1,457**	**11,043**	**8%**	**12%**	**4,984**	**40%**
	REPR/MAINT-OUTSIDE LABO									
	BUILDING R&M	6350	1,870			1,870	8%	0%	(1,870)	-100%
	STREETS & STRUCTURES R	6360	200			200	8%	0%	(200)	-100%
	FIXED EQUIPMENT R&M	6380	600			600	8%	0%	(600)	-100%
	MINOR EQUIPMENT R&M	6382	850			850	8%	0%	(850)	-100%
75	MOTOR VEHICLE EQ. R&M	6384	5,000		75	4,925	8%	2%	(4,100)	-82%
	CONSTRUCTION EQUIP R&M	6386	200			200	8%	0%	(200)	-100%
	AGRICULTURAL EQ. R&M	6387	5,350			5,350	8%	0%	(5,350)	-100%
	COMMUNICATION EQ. R&M	6390	400			400	8%	0%	(400)	-100%
	DISINFECT./EXTERMINATI	6394	800			800	8%	0%	(800)	-100%
	OTHER REPAIRS AND MAIN	6399	36,500			36,500	8%	0%	(36,500)	-100%
---			---	---	---	---	---	---	---	---
75	**REPR/MAINT-OUTSIDE L**		**51,770**		**75**	**51,695**	**8%**	**0%**	**(50,870)**	**-98%**
	RENTALS									
	LAND RENT	6400								
17	CYLINDER RENT	6425	155		17	138	8%	11%	49	32%
48	UNIFORM RENT	6430	500		48	452	8%	10%	76	15%
	OTHER RENT	6449	7,050			7,050	8%	0%	(7,050)	-100%
---			---	---	---	---	---	---	---	---
65	**RENTALS**		**7,705**		**65**	**7,640**	**8%**	**1%**	**(6,925)**	**-90%**
	OTHER SERVICES & CHARGE									
	DUES AND MEMBERSHIPS	6840								
	REGISTRATION FEE/TUITI	6845								
73	SERVICES NOT SPECIFIED	6999	1,000		73	927	8%	7%	(124)	-12%
---			---	---	---	---	---	---	---	---
73	**OTHER SERVICES & CHA**		**1,000**		**73**	**927**	**8%**	**7%**	**(124)**	**-12%**

CITY OF HATTIESBURG
001551 - GENERAL FUND-AIRPORT DIV.
EXPENDITURE REPORT
1 Months Ending 10/31/12

THIS MONTH ACTUAL		OBJ/SUB	ANNUAL BUDGET	OPEN PO & CONTRACTS	YTD ACTUAL	REMAINING BALANCE	PERCENT PLAN	PERCENT ACTUAL	....PROJECTED.... OVER/UNDER	%
1,670	**OTHER SERVICES & CHAR**		**72,975**		**1,670**	**71,305**	**8%**	**2%**	**(52,935)**	**-73%**
	LAND									
	LEASEHOLDS	7020								
	LAND									
	BUILDING/BLD IMPROVEMEN									
	BUILDINGS	7100								
	STORAGE SHED	7100 23								
	BUILDINGS									
	BUILDING IMPROVEMENTS	7150								
	HANGER #3 IMPROVEMENT	7150 32								
	BUILDING IMPROVEMEN									
	BUILDING/BLD IMPROVE									
	IMPROVEMENT OTHER THAN									
	DRAINS	7215								
	OTHER IMPROVEMENTS	7295								
	IMPROVEMENT OTHER TH									
	MACHINERY AND EQUIPMENT									
	AGRICULTURAL EQUIPMENT	7335								
	CONSTRUCTION EQUIPMENT	7345								
	COMMUNICATION EQUIPMEN	7355								
	OTHER EQUIPMENT	7399								
	MACHINERY AND EQUIPM									
	VEHICLES									
	PICK UP TRUCKS	7420								
	SPECIAL TRUCKS	7450								
	VEHICLES									
	CAPITAL OUTLAY									

			CITY OF HATTIESBURG							
	001551 - GENERAL FUND-AIRPORT DIV.		EXPENDITURE REPORT							
			1 Months Ending 10/31/12							
THIS MONTH			ANNUAL	OPEN PO	YTD	REMAINING	PERCENT		....PROJECTED....	
ACTUAL		OBJ/SUB	BUDGET	& CONTRACTS	ACTUAL	BALANCE	PLAN	ACTUAL	OVER/UNDER	%
---			---	---	---	---	---	---	---	---
12,430	**EXPENDITURES**		**225,803**	**1,146**	**12,430**	**212,227**	**8%**	**6%**	**(76,643)**	**-34%**

CITY OF HATTIESBURG
001553 - GENERAL FUND-CEMETERYDIV
EXPENDITURE REPORT
1 Months Ending 10/31/12

THIS MONTH ACTUAL		OBJ/SUB	ANNUAL BUDGET	OPEN PO & CONTRACTS	YTD ACTUAL	REMAINING BALANCE	PERCENT PLAN	PERCENT ACTUAL	....PROJECTED.... OVER/UNDER	%
	SALARIES									
29,413	REGULAR WAGES	4000	394,227		29,413	364,814	8%	7%	(41,271)	-10%
	DISASTER RECOVERY WAGE	4010								
2,236	OVERTIME	4300	21,000		2,236	18,764	8%	11%	5,832	28%
	DISASTER RECOVERY OVER	4310								
---			---	---	---	---	---	---	---	---
31,649	**SALARIES**		**415,227**		**31,649**	**383,578**	**8%**	**8%**	**(35,439)**	**-9%**
	EMPLOYEE BENEFITS									
4,513	STATE RETIREMENT	4600	59,215		4,513	54,702	8%	8%	(5,059)	-9%
2,325	F.I.C.A. TAXES	4700	31,770		2,325	29,445	8%	7%	(3,870)	-12%
5,820	HOSPITALIZATION INS.	4800	88,740		5,820	82,920	8%	7%	(18,900)	-21%
	UNEMPLOYMENT BENEFITS	4900	2,500			2,500	8%	0%	(2,500)	-100%
	WORKMAN'S COMPENSATION	4910	16,000			16,000	8%	0%	(16,000)	-100%
---			---	---	---	---	---	---	---	---
12,659	**EMPLOYEE BENEFITS**		**198,225**		**12,659**	**185,566**	**8%**	**6%**	**(46,317)**	**-23%**
---			---	---	---	---	---	---	---	---
44,308	**PERSONAL SERVICES**		**613,452**		**44,308**	**569,144**	**8%**	**7%**	**(81,756)**	**-13%**
	OFFICE SUPPLIES									
	PAPER	5003	100			100	8%	0%	(100)	-100%
	PRINTED FORMS	5005	100			100	8%	0%	(100)	-100%
	OTHER EXPENDABLE OFF.S	5010	800			800	8%	0%	(800)	-100%
	MINOR OFFICE EQUIP/FUR	5020	250			250	8%	0%	(250)	-100%
	PHOTO SUPPLIES	5040								
	SUBSCRIPTIONS,MAGS,MAP	5050								
	BOOKS	5070								
---			---	---	---	---	---	---	---	---
	OFFICE SUPPLIES		**1,250**			**1,250**	**8%**	**0%**	**(1,250)**	**-100%**
	OPERATING SUPPLIES									
	CLEANING/JANITORIAL SP	5100	2,000			2,000	8%	0%	(2,000)	-100%
	FOOD	5115								
	MEDICAL SUPPLIES	5120								
949	CHEMICALS	5130	2,700		949	1,751	8%	35%	8,688	322%
3,096	GAS AND OIL	5250	26,000		3,096	22,904	8%	12%	11,152	43%
	LUBRICANTS	5255	800			800	8%	0%	(800)	-100%

CITY OF HATTIESBURG
001553 - GENERAL FUND-CEMETERYDIV
EXPENDITURE REPORT
1 Months Ending 10/31/12

THIS MONTH ACTUAL		OBJ/SUB	ANNUAL BUDGET	OPEN PO & CONTRACTS	YTD ACTUAL	REMAINING BALANCE	PERCENT PLAN	PERCENT ACTUAL	....PROJECTED.... OVER/UNDER	%
696	DIESEL FUEL	5257	21,000		696	20,304	8%	3%	(12,648)	-60%
	WEARING APPAREL	5355	2,000			2,000	8%	0%	(2,000)	-100%
	ASPHALT & ASPHALT PROD	5400								
	CONCRETE, CEMENT, ETC.	5405	500			500	8%	0%	(500)	-100%
	SAND,CLAY,GRVL,FILL DI	5415	2,000	1,800		200	8%	0%	(2,000)	-100%
	DRAINAGE PIPE & CULVER	5420								
1,164	HORT./LANDSCAPING SPLY	5440	7,500		1,164	6,336	8%	16%	6,468	86%
	HAND TOOLS	5450	1,200			1,200	8%	0%	(1,200)	-100%
	MINOR EQUIPMENT	5460	3,500			3,500	8%	0%	(3,500)	-100%
	PUMPING EQUIPMENT PART	5495								
	TRAFFIC SIGNS	5545	50			50	8%	0%	(50)	-100%
	OTHER OPERATING MATL/S	5590	250			250	8%	0%	(250)	-100%
---			---	---	---	---	---	---	---	---
5,904	**OPERATING SUPPLIES**		**69,500**	**1,800**	**5,904**	**61,796**	**8%**	**8%**	**1,348**	**2%**
	REPAIR & MAINTENANCE SP									
	BUILDING MATERIALS & S	5600	500			500	8%	0%	(500)	-100%
	ELECTRICAL SUPPLIES	5605	500			500	8%	0%	(500)	-100%
96	PLUMBING SUPPLIES	5610	500		96	404	8%	19%	652	130%
	STRUCTURAL STEEL & IRO	5620	300			300	8%	0%	(300)	-100%
	PAINT AND PAINTING SPL	5650	1,300			1,300	8%	0%	(1,300)	-100%
16	MTR VEHICLE REP. PTS/S	5700	10,000		16	9,984	8%	0%	(9,808)	-98%
	COMMUNICATION REPAIR P	5750	700			700	8%	0%	(700)	-100%
631	AGRICLTRL REPAIR PTS/S	5755	4,600		631	3,969	8%	14%	2,972	65%
	EXPENDABLE WELDING SPL	5770	100			100	8%	0%	(100)	-100%
	OTHER REPAIR/MAINT. SP	5990	100			100	8%	0%	(100)	-100%
---			---	---	---	---	---	---	---	---
743	**REPAIR & MAINTENANCE**		**18,600**		**743**	**17,857**	**8%**	**4%**	**(9,684)**	**-52%**
---			---	---	---	---	---	---	---	---
6,647	**SUPPLIES AND EXPENSES**		**89,350**	**1,800**	**6,647**	**80,903**	**8%**	**7%**	**(9,586)**	**-11%**
	PROFESSIONAL SERVICES									
	ENGINEERING	6015								
	LEGAL	6025								
	MEDICAL	6027								
308	OTHER PROFESSIONAL SER	6049	3,500		308	3,192	8%	9%	196	6%
---			---	---	---	---	---	---	---	---
308	**PROFESSIONAL SERVICE**		**3,500**		**308**	**3,192**	**8%**	**9%**	**196**	**6%**

CITY OF HATTIESBURG
001553 - GENERAL FUND-CEMETERYDIV
EXPENDITURE REPORT
1 Months Ending 10/31/12

THIS MONTH ACTUAL		OBJ/SUB	ANNUAL BUDGET	OPEN PO & CONTRACTS	YTD ACTUAL	REMAINING BALANCE	PERCENT PLAN	PERCENT ACTUAL	....PROJECTED.... OVER/UNDER	%
	COMMUNICATIONS									
99	TELEPHONE AND TELEGRAP	6060	1,500		99	1,401	8%	7%	(312)	-21%
---			---	---	---	---	---	---	---	---
99	**COMMUNICATIONS**		**1,500**		**99**	**1,401**	**8%**	**7%**	**(312)**	**-21%**
	TRANSPORTATION									
	TRAVEL EXPENSE	6110	1,000			1,000	8%	0%	(1,000)	-100%
	FREIGHT	6120	50			50	8%	0%	(50)	-100%
---			---	---	---	---	---	---	---	---
	TRANSPORTATION		**1,050**			**1,050**	**8%**	**0%**	**(1,050)**	**-100%**
	ADVERTISING									
	ADVERTISING	6150								
---			---	---	---	---	---	---	---	---
	ADVERTISING									
	PRINTING AND BINDING									
	PRINTING	6200								
	BLUELINES	6210								
---			---	---	---	---	---	---	---	---
	PRINTING AND BINDING									
	INSURANCE									
	FIRE & EXTENDED COVERA	6250								
	PUBLIC LIAB/PROPERTY D	6255								
	AUTOMOBILE INSURANCE	6265								
---			---	---	---	---	---	---	---	---
	INSURANCE									
	UTILITIES									
13	GAS	6300	1,000		13	987	8%	1%	(844)	-84%
447	ELECTRICITY	6305	8,000		447	7,553	8%	6%	(2,636)	-33%
	WATER	6315								
---			---	---	---	---	---	---	---	---
460	**UTILITIES**		**9,000**		**460**	**8,540**	**8%**	**5%**	**(3,480)**	**-39%**
	REPR/MAINT-OUTSIDE LABO									
	BUILDING R&M	6350	500			500	8%	0%	(500)	-100%
	ELECTRICAL R&M	6355								
	PLUMBING EQUIPMENT R&M	6357								
	STREETS & STRUCTURES R	6360	2,800	425		2,375	8%	0%	(2,800)	-100%
	OFFICE EQUIPMENT R&M	6365	400			400	8%	0%	(400)	-100%
	FIXED EQUIPMENT R&M	6380								

CITY OF HATTIESBURG
001553 - GENERAL FUND-CEMETERYDIV
EXPENDITURE REPORT
1 Months Ending 10/31/12

THIS MONTH ACTUAL		OBJ/SUB	ANNUAL BUDGET	OPEN PO & CONTRACTS	YTD ACTUAL	REMAINING BALANCE	PERCENT PLAN	PERCENT ACTUAL	....PROJECTED.... OVER/UNDER	%
	MINOR EQUIPMENT R&M	6382	200			200	8%	0%	(200)	-100%
(30)	MOTOR VEHICLE EQ. R&M	6384	17,500		30-	17,530	8%	0%	(17,140)	-98%
	CONSTRUCTION EQUIP R&M	6386	2,000			2,000	8%	0%	(2,000)	-100%
	AGRICULTURAL EQ. R&M	6387	1,500			1,500	8%	0%	(1,500)	-100%
	COMMUNICATION EQ. R&M	6390	250			250	8%	0%	(250)	-100%
	CLEANING AND PAINTING	6392	7,000			7,000	8%	0%	(7,000)	-100%
	DISINFECT./EXTERMINATI	6394	600			600	8%	0%	(600)	-100%
	SIGN PAINTING	6396								
	TOW IN CHARGES	6398	500			500	8%	0%	(500)	-100%
	OTHER REPAIRS AND MAIN	6399	250			250	8%	0%	(250)	-100%
---			---	---	---	---	---	---	---	---
(30)	**REPR/MAINT-OUTSIDE L**		**33,500**	**425**	**30-**	**33,105**	**8%**	**0%**	**(33,140)**	**-99%**
	RENTALS									
	MACHINERY RENT	6420								
	CYLINDER RENT	6425								
208	UNIFORM RENT	6430	3,200		208	2,992	8%	7%	(704)	-22%
84	MOP-MAT-RAG RENT	6435	1,000		84	916	8%	8%	8	1%
---			---	---	---	---	---	---	---	---
292	**RENTALS**		**4,200**		**292**	**3,908**	**8%**	**7%**	**(696)**	**-17%**
	OTHER SERVICES & CHARGE									
	DUES AND MEMBERSHIPS	6840	300			300	8%	0%	(300)	-100%
	REGISTRATION FEE/TUITI	6845	300			300	8%	0%	(300)	-100%
	SERVICES NOT SPECIFIED	6999								
---			---	---	---	---	---	---	---	---
	OTHER SERVICES & CHA		**600**			**600**	**8%**	**0%**	**(600)**	**-100%**
---			---	---	---	---	---	---	---	---
1,129	**OTHER SERVICES & CHAR**		**53,350**	**425**	**1,129**	**51,796**	**8%**	**2%**	**(39,802)**	**-75%**
	_____									
	LAND									
200	LAND	7000	5,000		200	4,800	8%	4%	(2,600)	-52%
---			---	---	---	---	---	---	---	---
200	**LAND**		**5,000**		**200**	**4,800**	**8%**	**4%**	**(2,600)**	**-52%**
	BUILDING/BLD IMPROVEMEN									
	BUILDINGS	7100								
	BUILDING IMPROVEMENTS	7150								
	HIGHLAND	7150 13								
---			---	---	---	---	---	---	---	---

			CITY OF HATTIESBURG							
	001553 - GENERAL FUND-CEMETERYDIV		EXPENDITURE REPORT							
			1 Months Ending 10/31/12							
THIS MONTH			ANNUAL	OPEN PO	YTD	REMAINING	PERCENT		....PROJECTED....	
ACTUAL		OBJ/SUB	BUDGET	& CONTRACTS	ACTUAL	BALANCE	PLAN	ACTUAL	OVER/UNDER	%
	BUILDING IMPROVEMEN									
---			---	---	---	---	---	---	---	---
	BUILDING/BLD IMPROVE									
	IMPROVEMENT OTHER THAN									
	DRAINS	7215								
	STREETS & ROADWAYS	7230	32,000			32,000	8%	0%	(32,000)	-100%
	LANDSCAPING	7250								
	OTHER IMPROVEMENTS	7295	30,000			30,000	8%	0%	(30,000)	-100%
---			---	---	---	---	---	---	---	---
	IMPROVEMENT OTHER TH		**62,000**			**62,000**	**8%**	**0%**	**(62,000)**	**-100%**
	MACHINERY AND EQUIPMENT									
	OFFICE FURN/EQUIP.	7325								
	AGRICULTURAL EQUIPMENT	7335	10,000			10,000	8%	0%	(10,000)	-100%
	CONSTRUCTION EQUIPMENT	7345								
	COMMUNICATION EQUIPMEN	7355	2,500			2,500	8%	0%	(2,500)	-100%
	PIPE	7370								
	OTHER EQUIPMENT	7399								
---			---	---	---	---	---	---	---	---
	MACHINERY AND EQUIPM		**12,500**			**12,500**	**8%**	**0%**	**(12,500)**	**-100%**
	VEHICLES									
	AUTOMOBILES	7400								
	PICK UP TRUCKS	7420								
	DUMP TRUCKS	7440								
---			---	---	---	---	---	---	---	---
	VEHICLES									
---			---	---	---	---	---	---	---	---
200	**CAPITAL OUTLAY**		**79,500**		**200**	**79,300**	**8%**	**0%**	**(77,100)**	**-97%**
---			---	---	---	---	---	---	---	---
52,284	**EXPENDITURES**		**835,652**	**2,225**	**52,284**	**781,143**	**8%**	**6%**	**(208,244)**	**-25%**

CITY OF HATTIESBURG
001560 - GENERAL FUND-PARKING OPER.
EXPENDITURE REPORT
1 Months Ending 10/31/12

THIS MONTH ACTUAL		OBJ/SUB	ANNUAL BUDGET	OPEN PO & CONTRACTS	YTD ACTUAL	REMAINING BALANCE	PERCENT PLAN	PERCENT ACTUAL	....PROJECTED.... OVER/UNDER	%
	SALARIES									
10,335	REGULAR WAGES	4000	140,664		10,335	130,329	8%	7%	(16,644)	-12%
	DISASTER RECOVERY WAGE	4010								
142	OVERTIME	4300	1,000		142	858	8%	14%	704	70%
	DISASTER RECOVERY OVER	4310								
10,478	**SALARIES**		**141,664**		**10,478**	**131,186**	**8%**	**7%**	**(15,928)**	**-11%**
	EMPLOYEE BENEFITS									
1,237	STATE RETIREMENT	4600	20,210		1,237	18,973	8%	6%	(5,366)	-27%
778	F.I.C.A. TAXES	4700	10,845		778	10,067	8%	7%	(1,509)	-14%
776	HOSPITALIZATION INS.	4800	15,660		776	14,884	8%	5%	(6,348)	-41%
	UNEMPLOYMENT BENEFITS	4900	1,600			1,600	8%	0%	(1,600)	-100%
	WORKMAN'S COMPENSATION	4910	2,000			2,000	8%	0%	(2,000)	-100%
2,790	**EMPLOYEE BENEFITS**		**50,315**		**2,790**	**47,525**	**8%**	**6%**	**(16,835)**	**-33%**
13,268	**PERSONAL SERVICES**		**191,979**		**13,268**	**178,711**	**8%**	**7%**	**(32,763)**	**-17%**
	OFFICE SUPPLIES									
	PAPER	5003								
	PRINTED FORMS	5005								
	OTHER EXPENDABLE OFF.S	5010	600			600	8%	0%	(600)	-100%
	MINOR OFFICE EQUIP/FUR	5020	600			600	8%	0%	(600)	-100%
	COMPUTER SUPPLIES	5080								
	OFFICE SUPPLIES		**1,200**			**1,200**	**8%**	**0%**	**(1,200)**	**-100%**
	OPERATING SUPPLIES									
	CLEANING/JANITORIAL SP	5100	300			300	8%	0%	(300)	-100%
	CHEMICALS	5130	50			50	8%	0%	(50)	-100%
	GAS AND OIL	5250	1,200			1,200	8%	0%	(1,200)	-100%
	WEARING APPAREL	5355	500			500	8%	0%	(500)	-100%
	HORT./LANDSCAPING SPLY	5440								
	MINOR EQUIPMENT	5460	511			511	8%	0%	(511)	-100%
425	OTHER OPERATING MATL/S	5590	714		425	289	8%	60%	4,386	614%

CITY OF HATTIESBURG
001560 - GENERAL FUND-PARKING OPER.
EXPENDITURE REPORT
1 Months Ending 10/31/12

THIS MONTH ACTUAL		OBJ/SUB	ANNUAL BUDGET	OPEN PO & CONTRACTS	YTD ACTUAL	REMAINING BALANCE	PERCENT PLAN	PERCENT ACTUAL	....PROJECTED.... OVER/UNDER	%
425	**OPERATING SUPPLIES**		**3,275**		**425**	**2,850**	**8%**	**13%**	**1,825**	**56%**
	REPAIR & MAINTENANCE SP									
	ELECTRICAL SUPPLIES	5605	1,500			1,500	8%	0%	(1,500)	-100%
	PAINT AND PAINTING SPL	5650	800	800			8%	0%	(800)	-100%
	MTR VEHICLE REP. PTS/S	5700	475			475	8%	0%	(475)	-100%
---			---	---	---	---	---	---	---	---
	REPAIR & MAINTENANCE		**2,775**	**800**		**1,975**	**8%**	**0%**	**(2,775)**	**-100%**
---			---	---	---	---	---	---	---	---
425	**SUPPLIES AND EXPENSES**		**7,250**	**800**	**425**	**6,025**	**8%**	**6%**	**(2,150)**	**-30%**
	COMMUNICATIONS									
	TELEPHONE AND TELEGRAP	6060	47			47	8%	0%	(47)	-100%
	POSTAGE	6070								
---			---	---	---	---	---	---	---	---
	COMMUNICATIONS		**47**			**47**	**8%**	**0%**	**(47)**	**-100%**
	INSURANCE									
	PUBLIC LIAB/PROPERTY D	6255								
	AUTOMOBILE INSURANCE	6265								
---			---	---	---	---	---	---	---	---
	INSURANCE									
	UTILITIES									
979	ELECTRICITY	6305	18,050		979	17,071	8%	5%	(6,302)	-35%
---			---	---	---	---	---	---	---	---
979	**UTILITIES**		**18,050**		**979**	**17,071**	**8%**	**5%**	**(6,302)**	**-35%**
	REPR/MAINT-OUTSIDE LABO									
82	BUILDING R&M	6350	37,410	3,137	82	34,191	8%	0%	(36,426)	-97%
	ELECTRICAL R&M	6355	50			50	8%	0%	(50)	-100%
	PLUMBING EQUIPMENT R&M	6357	50			50	8%	0%	(50)	-100%
	OFFICE EQUIPMENT R&M	6365	50			50	8%	0%	(50)	-100%
	FIXED EQUIPMENT R&M	6380	2,000			2,000	8%	0%	(2,000)	-100%
	MOTOR VEHICLE EQ. R&M	6384	2,000			2,000	8%	0%	(2,000)	-100%
	SIGN PAINTING	6396	500			500	8%	0%	(500)	-100%
	TOW IN CHARGES	6398	100			100	8%	0%	(100)	-100%
410	OTHER REPAIRS AND MAIN	6399	4,845	100	410	4,335	8%	8%	75	2%
---			---	---	---	---	---	---	---	---
492	**REPR/MAINT-OUTSIDE L**		**47,005**	**3,237**	**492**	**43,276**	**8%**	**1%**	**(41,101)**	**-87%**
	RENTALS									

CITY OF HATTIESBURG
001560 - GENERAL FUND-PARKING OPER.
EXPENDITURE REPORT
1 Months Ending 10/31/12

THIS MONTH ACTUAL		OBJ/SUB	ANNUAL BUDGET	OPEN PO & CONTRACTS	YTD ACTUAL	REMAINING BALANCE	PERCENT PLAN	PERCENT ACTUAL	....PROJECTED.... OVER/UNDER	%
1,477	PARKING GARAGE/LOT REN	6402	17,200		1,477	15,723	8%	9%	524	3%
	OTHER RENT	6449	100			100	8%	0%	(100)	-100%
---			---	---	---	---	---	---	---	---
1,477	**RENTALS**		**17,300**		**1,477**	**15,823**	**8%**	**9%**	**424**	**2%**
---			---	---	---	---	---	---	---	---
2,949	**OTHER SERVICES & CHAR**		**82,402**	**3,237**	**2,949**	**76,216**	**8%**	**4%**	**(47,014)**	**-57%**
	_____									
	LAND									
	LEASEHOLDS	7020	10,000			10,000	8%	0%	(10,000)	-100%
---			---	---	---	---	---	---	---	---
	LAND		**10,000**			**10,000**	**8%**	**0%**	**(10,000)**	**-100%**
	IMPROVEMENT OTHER THAN									
	FENCES/RAILINGS	7212								
	PARKING LOT/DRIVEWAY	7227								
	PARKING LOTS-GENERAL	7227 01								
	PINE ST GARAGE	7227 02								
---			---	---	---	---	---	---	---	---
	PARKING LOT/DRIVEWA									
---			---	---	---	---	---	---	---	---
	IMPROVEMENT OTHER TH									
	MACHINERY AND EQUIPMENT									
	OFFICE FURN/EQUIP.	7325								
---			---	---	---	---	---	---	---	---
	MACHINERY AND EQUIPM									
	VEHICLES									
	AUTOMOBILES	7400								
---			---	---	---	---	---	---	---	---
	VEHICLES									
---			---	---	---	---	---	---	---	---
	CAPITAL OUTLAY		**10,000**			**10,000**	**8%**	**0%**	**(10,000)**	**-100%**
---			---	---	---	---	---	---	---	---
16,642	**EXPENDITURES**		**291,631**	**4,037**	**16,642**	**270,952**	**8%**	**6%**	**(91,927)**	**-32%**

CITY OF HATTIESBURG
002300 - PKS/REC-RECREATION MAINT. DIV.
EXPENDITURE REPORT
1 Months Ending 10/31/12

THIS MONTH ACTUAL		OBJ/SUB	ANNUAL BUDGET	OPEN PO & CONTRACTS	YTD ACTUAL	REMAINING BALANCE	PERCENT PLAN	PERCENT ACTUAL	....PROJECTED.... OVER/UNDER	%
	SALARIES									
48,660	REGULAR WAGES	4000	691,703		48,660	643,043	8%	7%	(107,783)	-16%
	DISASTER RECOVERY WAGE	4010								
4,510	OVERTIME	4300	40,000		4,510	35,490	8%	11%	14,120	35%
	DISASTER RECOVERY OVER	4310								
---			---	---	---	---	---	---	---	---
53,169	**SALARIES**		**731,703**		**53,169**	**678,534**	**8%**	**7%**	**(93,675)**	**-13%**
	EMPLOYEE BENEFITS									
7,582	STATE RETIREMENT	4600	104,355		7,582	96,773	8%	7%	(13,371)	-13%
3,983	F.I.C.A. TAXES	4700	55,980		3,983	51,997	8%	7%	(8,184)	-15%
10,088	HOSPITALIZATION INS.	4800	161,820		10,088	151,732	8%	6%	(40,764)	-25%
	UNEMPLOYMENT BENEFITS	4900	4,100			4,100	8%	0%	(4,100)	-100%
	WORKMAN'S COMPENSATION	4910	25,026			25,026	8%	0%	(25,026)	-100%
---			---	---	---	---	---	---	---	---
21,653	**EMPLOYEE BENEFITS**		**351,281**		**21,653**	**329,628**	**8%**	**6%**	**(91,445)**	**-26%**
---			---	---	---	---	---	---	---	---
74,822	**PERSONAL SERVICES**		**1,082,984**		**74,822**	**1,008,162**	**8%**	**7%**	**(185,120)**	**-17%**
	OFFICE SUPPLIES									
	PAPER	5003								
	PRINTED FORMS	5005								
632	OTHER EXPENDABLE OFF.S	5010	1,800		632	1,168	8%	35%	5,784	321%
68	MINOR OFFICE EQUIP/FUR	5020	600		68	532	8%	11%	216	36%
	PHOTO SUPPLIES	5040								
	BOOKS	5070								
	COMPUTER SUPPLIES	5080								
---			---	---	---	---	---	---	---	---
700	**OFFICE SUPPLIES**		**2,400**		**700**	**1,700**	**8%**	**29%**	**6,000**	**250%**
	OPERATING SUPPLIES									
2,419	CLEANING/JANITORIAL SP	5100	15,000		2,419	12,581	8%	16%	14,028	94%
	MEDICAL SUPPLIES	5120	250			250	8%	0%	(250)	-100%
4,626	CHEMICALS	5130	40,000		4,626	35,374	8%	12%	15,512	39%
2,756	GAS AND OIL	5250	80,000		2,756	77,244	8%	3%	(46,928)	-59%
670	LUBRICANTS	5255	2,500		670	1,830	8%	27%	5,540	222%
80	DIESEL FUEL	5257	9,000		80	8,920	8%	1%	(8,040)	-89%

			CITY OF HATTIESBURG							
	002300 - PKS/REC-RECREATION MAINT. DIV.		EXPENDITURE REPORT							
			1 Months Ending 10/31/12							
THIS MONTH			ANNUAL	OPEN PO	YTD	REMAINING	PERCENT		....PROJECTED....	
ACTUAL		OBJ/SUB	BUDGET	& CONTRACTS	ACTUAL	BALANCE	PLAN	ACTUAL	OVER/UNDER	%
	WEARING APPAREL	5355	2,500			2,500	8%	0%	(2,500)	-100%
	ASPHALT & ASPHALT PROD	5400								
	CONCRETE, CEMENT, ETC.	5405	1,000			1,000	8%	0%	(1,000)	-100%
1,650	SAND,CLAY,GRVL,FILL DI	5415	18,000		1,650	16,350	8%	9%	1,800	10%
2,426	HORT./LANDSCAPING SPLY	5440	35,000	18,338	2,426	14,236	8%	7%	(5,888)	-17%
131	HAND TOOLS	5450	2,500		131	2,369	8%	5%	(928)	-37%
1,438	MINOR EQUIPMENT	5460	4,000		1,438	2,562	8%	36%	13,256	331%
	RECREATIONAL SUPPLIES	5510	22,000	1,398		20,603	8%	0%	(22,000)	-100%
338	OTHER OPERATING MATL/S	5590	6,000	144	338	5,518	8%	6%	(1,944)	-32%
378	OTHER OPER.MATLS-KAB	5591	7,000		378	6,622	8%	5%	(2,464)	-35%
---			---	---	---	---	---	---	---	---
16,912	**OPERATING SUPPLIES**		**244,750**	**19,880**	**16,912**	**207,959**	**8%**	**7%**	**(41,806)**	**-17%**
	REPAIR & MAINTENANCE SP									
258	BUILDING MATERIALS & S	5600	20,796		258	20,538	8%	1%	(17,700)	-85%
978	ELECTRICAL SUPPLIES	5605	10,000	260	978	8,762	8%	10%	1,736	17%
581	PLUMBING SUPPLIES	5610	6,500		581	5,919	8%	9%	472	7%
	STRUCTURAL STEEL & IRO	5620								
4,832	PAINT AND PAINTING SPL	5650	30,000		4,832	25,168	8%	16%	27,984	93%
1,089	MTR VEHICLE REP. PTS/S	5700	11,000	34	1,089	9,877	8%	10%	2,068	19%
128	COMMUNICATION REPAIR P	5750	2,000		128	1,872	8%	6%	(464)	-23%
3,911	AGRICLTRL REPAIR PTS/S	5755	28,000	989	3,911	23,101	8%	14%	18,932	68%
	OTHER REPAIR/MAINT. SP	5990								
	VANDALISM REPAIR PARTS	5992	2,000			2,000	8%	0%	(2,000)	-100%
	REPR SPLY-8/29/05 STOR	5995								
---			---	---	---	---	---	---	---	---
11,778	**REPAIR & MAINTENANCE**		**110,296**	**1,283**	**11,778**	**97,236**	**8%**	**11%**	**31,040**	**28%**
---			---	---	---	---	---	---	---	---
29,390	**SUPPLIES AND EXPENSES**		**357,446**	**21,163**	**29,390**	**306,895**	**8%**	**8%**	**(4,766)**	**-1%**
	PROFESSIONAL SERVICES									
	CONSULTANT SERV/SURVEY	6020								
	OTHER PROFESSIONAL SER	6049								
---			---	---	---	---	---	---	---	---
	PROFESSIONAL SERVICE									
	COMMUNICATIONS									
136	TELEPHONE AND TELEGRAP	6060	750		136	614	8%	18%	882	118%
	POSTAGE	6070	450			450	8%	0%	(450)	-100%

CITY OF HATTIESBURG
002300 - PKS/REC-RECREATION MAINT. DIV.
EXPENDITURE REPORT
1 Months Ending 10/31/12

THIS MONTH ACTUAL		OBJ/SUB	ANNUAL BUDGET	OPEN PO & CONTRACTS	YTD ACTUAL	REMAINING BALANCE	PERCENT PLAN	PERCENT ACTUAL	....PROJECTED.... OVER/UNDER	%
136	**COMMUNICATIONS**		**1,200**		**136**	**1,064**	**8%**	**11%**	**432**	**36%**
	TRANSPORTATION									
	TRAVEL EXPENSE	6110	450			450	8%	0%	(450)	-100%
	FREIGHT	6120								
	TRANSPORTATION		**450**			**450**	**8%**	**0%**	**(450)**	**-100%**
	ADVERTISING									
	ADVERTISING	6150								
	ADVERTISING									
	PRINTING AND BINDING									
151	PRINTING	6200	500		151	349	8%	30%	1,312	262%
151	**PRINTING AND BINDING**		**500**		**151**	**349**	**8%**	**30%**	**1,312**	**262%**
	INSURANCE									
	PUBLIC LIAB/PROPERTY D	6255								
	AUTOMOBILE INSURANCE	6265								
	OTHER INSURANCE	6299								
	INSURANCE									
	UTILITIES									
	GAS	6300								
230	ELECTRICITY	6305	7,500		230	7,270	8%	3%	(4,740)	-63%
230	**UTILITIES**		**7,500**		**230**	**7,270**	**8%**	**3%**	**(4,740)**	**-63%**
	REPR/MAINT-OUTSIDE LABO									
135	BUILDING R&M	6350	7,000		135	6,865	8%	2%	(5,380)	-77%
	8/29/05 FACILITY REPRS	6351								
	8/29 WALKING TRL PW44	6351 01								
	8/29 DOLEAC VARI PWs	6351 02								
	8/29 ZOO FENCE PW3962	6351 03								
	8/29 TATUM PW1565	6351 04								
	8/29 DAHMER PW1554	6351 05								
	8/29 AFRICA EXH PW387	6351 06								
	8/29 DAHMER EQ PW4497	6351 07								
	8/29 DUNCAN LK PW1609	6351 08								

CITY OF HATTIESBURG
002300 - PKS/REC-RECREATION MAINT. DIV.
EXPENDITURE REPORT
1 Months Ending 10/31/12

THIS MONTH ACTUAL		OBJ/SUB	ANNUAL BUDGET	OPEN PO & CONTRACTS	YTD ACTUAL	REMAINING BALANCE	PERCENT PLAN	PERCENT ACTUAL	....PROJECTED.... OVER/UNDER	%
	8/29 JAYCEE PK PW1562	6351 09								
	8/29 ZOO TRACK PW5143	6351 10								
---			---	---	---	---	---	---	---	---
	8/29/05 FACILITY RE									
	8/29/05 STORM REPAIRS	6353								
3,520	ELECTRICAL R&M	6355	7,000		3,520	3,480	8%	50%	35,240	503%
	PLUMBING EQUIPMENT R&M	6357	200			200	8%	0%	(200)	-100%
	STREETS & STRUCTURES R	6360								
	OFFICE EQUIPMENT R&M	6365	150	65		85	8%	0%	(150)	-100%
5,005	FIXED EQUIPMENT R&M	6380	23,000		5,005	17,995	8%	22%	37,060	161%
	MINOR EQUIPMENT R&M	6382	1,500			1,500	8%	0%	(1,500)	-100%
16	MOTOR VEHICLE EQ. R&M	6384	13,500		16	13,485	8%	0%	(13,308)	-99%
2,287	AGRICULTURAL EQ. R&M	6387	9,000	900	2,287	5,813	8%	25%	18,444	205%
150	COMMUNICATION EQ. R&M	6390	1,000		150	850	8%	15%	800	80%
75	DISINFECT./EXTERMINATI	6394	3,300		75	3,225	8%	2%	(2,400)	-73%
85	SIGN PAINTING	6396	5,200		85	5,115	8%	2%	(4,180)	-80%
75	TOW IN CHARGES	6398	550		75	475	8%	14%	350	64%
80	OTHER REPAIRS AND MAIN	6399	2,000		80	1,920	8%	4%	(1,040)	-52%
---			---	---	---	---	---	---	---	---
11,429	**REPR/MAINT-OUTSIDE L**		**73,400**	**965**	**11,429**	**61,006**	**8%**	**16%**	**63,748**	**87%**
	RENTALS									
	MACHINERY RENT	6420	6,800			6,800	8%	0%	(6,800)	-100%
	CYLINDER RENT	6425								
	UNIFORM RENT	6430	6,000			6,000	8%	0%	(6,000)	-100%
928	OTHER RENT	6449	2,970		928	2,043	8%	31%	8,166	275%
---			---	---	---	---	---	---	---	---
928	**RENTALS**		**15,770**		**928**	**14,843**	**8%**	**6%**	**(4,634)**	**-29%**
	OTHER SERVICES & CHARGE									
	DUES AND MEMBERSHIPS	6840	650			650	8%	0%	(650)	-100%
	REGISTRATION FEE/TUITI	6845	950			950	8%	0%	(950)	-100%
250	CUSTODIAL SERVICE	6870	3,000		250	2,750	8%	8%		0%
	SERVICES NOT SPECIFIED	6999	85,750	2,509		83,241	8%	0%	(85,750)	-100%
---			---	---	---	---	---	---	---	---
250	**OTHER SERVICES & CHA**		**90,350**	**2,509**	**250**	**87,591**	**8%**	**0%**	**(87,350)**	**-97%**
---			---	---	---	---	---	---	---	---
13,123	**OTHER SERVICES & CHAR**		**189,170**	**3,474**	**13,123**	**172,574**	**8%**	**7%**	**(31,694)**	**-17%**

			CITY OF HATTIESBURG							
	002300 - PKS/REC-RECREATION MAINT. DIV.		EXPENDITURE REPORT							
			1 Months Ending 10/31/12							
THIS MONTH			ANNUAL	OPEN PO	YTD	REMAINING	PERCENT		....PROJECTED....	
ACTUAL		OBJ/SUB	BUDGET	& CONTRACTS	ACTUAL	BALANCE	PLAN	ACTUAL	OVER/UNDER	%
	BUILDING/BLD IMPROVEMEN									
	BUILDINGS	7100								
	DAHMER PARK	7100 08								
	TATUM PARK	7100 10								
	SAENGER BLD/JDS CTR.	7100 19								
---			---	---	---	---	---	---	---	---
	BUILDINGS									
	BUILDING IMPROVEMENTS	7150								
	REC.CENTER (OLD YMCA)	7150 10								
	BURGER CTR(6TH ST)	7150 12								
	GROUNDS MAINT,SHOP	7150 31								
	UNETTA STREET GYM	7150 36								
---			---	---	---	---	---	---	---	---
	BUILDING IMPROVEMEN									
---			---	---	---	---	---	---	---	---
	BUILDING/BLD IMPROVE									
	IMPROVEMENT OTHER THAN									
	PARKING LOT/DRIVEWAY	7227								
	PARK & PLAYGROUND LIGH	7240								
	SMOKEY HERRINGTON FIEL	7243								
	TRACKS	7244								
	JAYCEE BALLPK/WORLD SE	7248								
	LANDSCAPING	7250								
	MDOT-INTERCHANGE ENHA	7250 01								
	TREE RECOVERY (GRANT)	7250 02								
	DOWNTOWN LANDSCAPING	7250 03								
---			---	---	---	---	---	---	---	---
	LANDSCAPING									
	POOLS	7252								
	DAHMER POOL	7252 01								
	REC CENTER POOL	7252 02								
	5TH STREET POOL	7252 03								
	CITY PARK-BUSCHMAN	7252 04								
---			---	---	---	---	---	---	---	---
	POOLS									
	RECREATION IMPROVEMENT	7256								
	TATUM PARK	7256 01								

CITY OF HATTIESBURG
002300 - PKS/REC-RECREATION MAINT. DIV.
EXPENDITURE REPORT
1 Months Ending 10/31/12

THIS MONTH ACTUAL		OBJ/SUB	ANNUAL BUDGET	OPEN PO & CONTRACTS	YTD ACTUAL	REMAINING BALANCE	PERCENT PLAN	PERCENT ACTUAL	....PROJECTED.... OVER/UNDER	%
	PEOPLE'S PARK-PALMERS	7256 03								
	TIPTON STREET	7256 04								
	9TH STREET BALLPARK	7256 05								
	JAYCEE BALLPARK	7256 06								
	5TH STREET COMM. CTR.	7256 07								
	SAN ANTONIO SCORE BOO	7256 10								
	HOPE PARK	7256 11								
	MOBILE ST. POCKET PAR	7256 14								
---			---	---	---	---	---	---	---	---
	RECREATION IMPROVEM									
	OTHER IMPROVEMENTS	7295								
	KAMPER PK TENNIS/WLK	7295 03	8,500	35,890		(27,390)	8%	0%	(8,500)	-100%
	THAMES ELEMENTARY	7295 05								
	TIMBERTON IMPROVEMENT	7295 13								
	PLAYGROUND IMPROVEMEN	7295 15								
	DAHMER PARK	7295 18								
	CAMERON FIELD	7295 19								
	REC.FAC. - STORM DAMA	7295 40								
	DUNCAN LAKE	7295 42								
	CHAIN PARK	7295 43	85,000	3,400		81,600	8%	0%	(85,000)	-100%
	VETERAN'S PARK	7295 46								
	TATUM PARK/DIXIE YOUT	7295 49	235,000			235,000	8%	0%	(235,000)	-100%
	KATZ PARK WALL	7295 50								
	TOWN SQUARE PARK	7295 52								
	MISC.OTHER IMPROVEMEN	7295 99	105,000			105,000	8%	0%	(105,000)	-100%
---			---	---	---	---	---	---	---	---
	OTHER IMPROVEMENTS		**433,500**	**39,290**		**394,210**	**8%**	**0%**	**(433,500)**	**-100%**
---			---	---	---	---	---	---	---	---
	IMPROVEMENT OTHER TH		**433,500**	**39,290**		**394,210**	**8%**	**0%**	**(433,500)**	**-100%**
	MACHINERY AND EQUIPMENT									
	8/29/05 STORM EQUIP	7302								
	OFFICE FURN/EQUIP.	7325								
	DATA PROCESSING EQUIP.	7327								
	AGRICULTURAL EQUIPMENT	7335	55,500	3,360		52,140	8%	0%	(55,500)	-100%
	RECREATIONAL EQUIPMENT	7350								
	COMMUNICATION EQUIPMEN	7355								
	OTHER EQUIPMENT	7399								

			CITY OF HATTIESBURG							
	002300 - PKS/REC-RECREATION MAINT. DIV.		EXPENDITURE REPORT							
			1 Months Ending 10/31/12							
THIS MONTH			ANNUAL	OPEN PO	YTD	REMAINING	PERCENT		....PROJECTED....	
ACTUAL		OBJ/SUB	BUDGET	& CONTRACTS	ACTUAL	BALANCE	PLAN	ACTUAL	OVER/UNDER	%
----------			---------	---------	---------	---------	-----	-----	--------	-----
	MACHINERY AND EQUIPM		**55,500**	**3,360**		**52,140**	**8%**	**0%**	**(55,500)**	**-100%**
	VEHICLES									
	BUSES	7410								
	PICK UP TRUCKS	7420								
	SPECIAL TRUCKS	7450								
----------			---------	---------	---------	---------	-----	-----	--------	-----
	VEHICLES									
----------			---------	---------	---------	---------	-----	-----	--------	-----
	CAPITAL OUTLAY		**489,000**	**42,650**		**446,350**	**8%**	**0%**	**(489,000)**	**-100%**
----------			---------	---------	---------	---------	-----	-----	--------	-----
117,335	**EXPENDITURES**		**2,118,600**	**67,287**	**117,335**	**1,933,980**	**8%**	**6%**	**(710,580)**	**-34%**

CITY OF HATTIESBURG
002315 - PKS/REC-REC.ADMIN/COM.REL.
EXPENDITURE REPORT
1 Months Ending 10/31/12

THIS MONTH ACTUAL		OBJ/SUB	ANNUAL BUDGET	OPEN PO & CONTRACTS	YTD ACTUAL	REMAINING BALANCE	PERCENT PLAN	PERCENT ACTUAL	....PROJECTED.... OVER/UNDER	%
	SALARIES									
19,438	REGULAR WAGES	4000	346,853		19,438	327,415	8%	6%	(113,597)	-33%
	DISASTER RECOVERY WAGE	4010								
	OVERTIME	4300								
	DISASTER RECOVERY OVER	4310								
---			---	---	---	---	---	---	---	---
19,438	**SALARIES**		**346,853**		**19,438**	**327,415**	**8%**	**6%**	**(113,597)**	**-33%**
	EMPLOYEE BENEFITS									
2,772	STATE RETIREMENT	4600	49,465		2,772	46,693	8%	6%	(16,201)	-33%
1,440	F.I.C.A. TAXES	4700	26,580		1,440	25,140	8%	5%	(9,300)	-35%
1,940	HOSPITALIZATION INS.	4800	36,540		1,940	34,600	8%	5%	(13,260)	-36%
	UNEMPLOYMENT BENEFITS	4900	1,000			1,000	8%	0%	(1,000)	-100%
	WORKMAN'S COMPENSATION	4910	9,480			9,480	8%	0%	(9,480)	-100%
---			---	---	---	---	---	---	---	---
6,152	**EMPLOYEE BENEFITS**		**123,065**		**6,152**	**116,913**	**8%**	**5%**	**(49,241)**	**-40%**
---			---	---	---	---	---	---	---	---
25,590	**PERSONAL SERVICES**		**469,918**		**25,590**	**444,328**	**8%**	**5%**	**(162,838)**	**-35%**
	OFFICE SUPPLIES									
	PAPER	5003	350			350	8%	0%	(350)	-100%
	PRINTED FORMS	5005	755			755	8%	0%	(755)	-100%
	OTHER EXPENDABLE OFF.S	5010	1,900			1,900	8%	0%	(1,900)	-100%
	MINOR OFFICE EQUIP/FUR	5020								
	SUBSCRIPTIONS,MAGS,MAP	5050								
	BOOKS	5070								
	COMPUTER SUPPLIES	5080	800			800	8%	0%	(800)	-100%
---			---	---	---	---	---	---	---	---
	OFFICE SUPPLIES		**3,805**			**3,805**	**8%**	**0%**	**(3,805)**	**-100%**
	OPERATING SUPPLIES									
	CLEANING/JANITORIAL SP	5100								
	HOUSEHOLD SUPPLIES	5110								
	FOOD	5115	100			100	8%	0%	(100)	-100%
	MEDICAL SUPPLIES	5120	100			100	8%	0%	(100)	-100%
	CHEMICALS	5130	8,500			8,500	8%	0%	(8,500)	-100%
	SERVE-SAFE SUPPLIES	5155	200			200	8%	0%	(200)	-100%

CITY OF HATTIESBURG
002315 - PKS/REC-REC.ADMIN/COM.REL.
EXPENDITURE REPORT
1 Months Ending 10/31/12

THIS MONTH ACTUAL		OBJ/SUB	ANNUAL BUDGET	OPEN PO & CONTRACTS	YTD ACTUAL	REMAINING BALANCE	PERCENT PLAN	PERCENT ACTUAL	....PROJECTED.... OVER/UNDER	%
226	GAS AND OIL	5250	11,800		226	11,574	8%	2%	(9,088)	-77%
	LUBRICANTS	5255								
	OTHER FUEL	5260								
	WEARING APPAREL	5355	600			600	8%	0%	(600)	-100%
	CONCRETE, CEMENT, ETC.	5405								
	SAND,CLAY,GRVL,FILL DI	5415								
	HORT./LANDSCAPING SPLY	5440								
144	MINOR EQUIPMENT	5460	2,250		144	2,106	8%	6%	(522)	-23%
1,551	RECREATIONAL SUPPLIES	5510	60,000	12,528	1,551	45,921	8%	3%	(41,388)	-69%
	MDSE FOR RESALE	5520	9,325			9,325	8%	0%	(9,325)	-100%
	CERAMIC SUP.FOR RESALE	5521								
	OTHER OPERATING MATL/S	5590	850			850	8%	0%	(850)	-100%
---			---	---	---	---	---	---	---	---
1,920	**OPERATING SUPPLIES**		**93,725**	**12,528**	**1,920**	**79,276**	**8%**	**2%**	**(70,685)**	**-75%**
	REPAIR & MAINTENANCE SP									
	BUILDING MATERIALS & S	5600	300			300	8%	0%	(300)	-100%
	ELECTRICAL SUPPLIES	5605								
	PLUMBING SUPPLIES	5610								
	STRUCTURAL STEEL & IRO	5620								
	PAINT AND PAINTING SPL	5650	150			150	8%	0%	(150)	-100%
	MTR VEHICLE REP. PTS/S	5700	700	457		243	8%	0%	(700)	-100%
	RECREATIONAL EQ. REP P	5765								
---			---	---	---	---	---	---	---	---
	REPAIR & MAINTENANCE		**1,150**	**457**		**693**	**8%**	**0%**	**(1,150)**	**-100%**
---			---	---	---	---	---	---	---	---
1,920	**SUPPLIES AND EXPENSES**		**98,680**	**12,985**	**1,920**	**83,774**	**8%**	**2%**	**(75,640)**	**-77%**
	_____									
	PROFESSIONAL SERVICES									
	ARCHITECTURAL	6012								
	CONSULTANT SERV/SURVEY	6020								
	CONTRACTUAL PROGRAMS	6032								
9,481	OFFICIALS	6034	98,700		9,481	89,219	8%	10%	15,072	15%
17,090	OTHER PROFESSIONAL SER	6049	180,084		17,090	162,994	8%	9%	24,996	14%
---			---	---	---	---	---	---	---	---
26,571	**PROFESSIONAL SERVICE**		**278,784**		**26,571**	**252,213**	**8%**	**10%**	**40,068**	**14%**
	COMMUNICATIONS									
50	TELEPHONE AND TELEGRAP	6060	1,760		50	1,710	8%	3%	(1,160)	-66%

CITY OF HATTIESBURG
002315 - PKS/REC-REC.ADMIN/COM.REL.
EXPENDITURE REPORT
1 Months Ending 10/31/12

THIS MONTH ACTUAL		OBJ/SUB	ANNUAL BUDGET	OPEN PO & CONTRACTS	YTD ACTUAL	REMAINING BALANCE	PERCENT PLAN	PERCENT ACTUAL	....PROJECTED.... OVER/UNDER	%
	POSTAGE	6070								
---			---	---	---	---	---	---	---	---
50	**COMMUNICATIONS**		**1,760**		**50**	**1,710**	**8%**	**3%**	**(1,160)**	**-66%**
	TRANSPORTATION									
	TRAVEL EXPENSE	6110	650			650	8%	0%	(650)	-100%
	CONTRACT TRAVEL	6115								
	FREIGHT	6120								
	MESSENGER/EXPRESS SERV	6130								
---			---	---	---	---	---	---	---	---
	TRANSPORTATION		**650**			**650**	**8%**	**0%**	**(650)**	**-100%**
	ADVERTISING									
	ADVERTISING	6150								
	ADVERTISING-SPEC. EVEN	6152								
	ADVERTISING-SENIOR FAR	6154	2,940			2,940	8%	0%	(2,940)	-100%
---			---	---	---	---	---	---	---	---
	ADVERTISING		**2,940**			**2,940**	**8%**	**0%**	**(2,940)**	**-100%**
	PRINTING AND BINDING									
	PRINTING	6200	100			100	8%	0%	(100)	-100%
	FILM PROCESSING	6240								
---			---	---	---	---	---	---	---	---
	PRINTING AND BINDING		**100**			**100**	**8%**	**0%**	**(100)**	**-100%**
	INSURANCE									
	PUBLIC LIAB/PROPERTY D	6255								
	BOILER MACHINERY	6260								
	OTHER INSURANCE	6299								
---			---	---	---	---	---	---	---	---
	INSURANCE									
	UTILITIES									
26	GAS	6300	4,700		26	4,674	8%	1%	(4,388)	-93%
12,564	ELECTRICITY	6305	150,000		12,564	137,436	8%	8%	768	1%
---			---	---	---	---	---	---	---	---
12,590	**UTILITIES**		**154,700**		**12,590**	**142,110**	**8%**	**8%**	**(3,620)**	**-2%**
	REPR/MAINT-OUTSIDE LABO									
	BUILDING R&M	6350	1,000	400		600	8%	0%	(1,000)	-100%
	ELECTRICAL R&M	6355								
	PLUMBING EQUIPMENT R&M	6357	300			300	8%	0%	(300)	-100%
	OFFICE EQUIPMENT R&M	6365	1,700			1,700	8%	0%	(1,700)	-100%

CITY OF HATTIESBURG
002315 - PKS/REC-REC.ADMIN/COM.REL.
EXPENDITURE REPORT
1 Months Ending 10/31/12

THIS MONTH ACTUAL		OBJ/SUB	ANNUAL BUDGET	OPEN PO & CONTRACTS	YTD ACTUAL	REMAINING BALANCE	PERCENT PLAN	PERCENT ACTUAL	....PROJECTED.... OVER/UNDER	%
	HOUSEHOLD EQUIPMENT R&	6370								
	FIXED EQUIPMENT R&M	6380								
	MINOR EQUIPMENT R&M	6382	350			350	8%	0%	(350)	-100%
	MOTOR VEHICLE EQ. R&M	6384	700			700	8%	0%	(700)	-100%
	RECREATIONAL EQ. R&M	6388								
	COMMUNICATION EQ. R&M	6390								
	DISINFECT./EXTERMINATI	6394	2,000			2,000	8%	0%	(2,000)	-100%
	SIGN PAINTING	6396	200			200	8%	0%	(200)	-100%
	TOW IN CHARGES	6398								
	OTHER REPAIRS AND MAIN	6399								
---			---	---	---	---	---	---	---	---
	REPR/MAINT-OUTSIDE L		**6,250**	**400**		**5,850**	**8%**	**0%**	**(6,250)**	**-100%**
	RENTALS									
	LAND RENT	6400								
	MACHINERY RENT	6420								
	CYLINDER RENT	6425								
	MOP-MAT-RAG-RENT	6435								
	OTHER RENT	6449	500			500	8%	0%	(500)	-100%
---			---	---	---	---	---	---	---	---
	RENTALS		**500**			**500**	**8%**	**0%**	**(500)**	**-100%**
	OTHER SERVICES & CHARGE									
244	PROP.TAX COLL. FEES .0	6830	5,000		244	4,756	8%	5%	(2,072)	-41%
	PROP.TAX COLL. FEES.00	6831	4,000			4,000	8%	0%	(4,000)	-100%
	DUES AND MEMBERSHIPS	6840	500			500	8%	0%	(500)	-100%
(609)	REGISTRATION FEE/TUITI	6845	1,500		609-	2,109	8%	41%	5,808	387%
	CONTRACT COACHES	6852								
	DAY CAMP COUNSELORS	6855								
	CUSTODIAL SERVICE	6870								
	SERVICES NOT SPECIFIED	6999	200			200	8%	0%	(200)	-100%
---			---	---	---	---	---	---	---	---
(365)	**OTHER SERVICES & CHA**		**11,200**		**365-**	**11,565**	**8%**	**3%**	**(6,820)**	**-61%**
---			---	---	---	---	---	---	---	---
38,846	**OTHER SERVICES & CHAR**		**456,884**	**400**	**38,846**	**417,638**	**8%**	**9%**	**9,268**	**2%**
	_____									
	IMPROVEMENT OTHER THAN									
	PARKING LOT/DRIVEWAY	7227								
	OTHER IMPROVEMENTS	7295								

			CITY OF HATTIESBURG							
	002315 - PKS/REC-REC.ADMIN/COM.REL.		EXPENDITURE REPORT							
			1 Months Ending 10/31/12							
THIS MONTH			ANNUAL	OPEN PO	YTD	REMAINING	PERCENT		....PROJECTED....	
ACTUAL		OBJ/SUB	BUDGET	& CONTRACTS	ACTUAL	BALANCE	PLAN	ACTUAL	OVER/UNDER	%
----------			---------	---------	---------	---------	-----	-----	--------	-----
	IMPROVEMENT OTHER TH									
	MACHINERY AND EQUIPMENT									
	OFFICE FURN/EQUIP.	7325								
	DATA PROCESSING EQUIP.	7327								
	RECREATIONAL EQUIPMENT	7350								
	COMMUNICATION EQUIPMEN	7355								
----------			---------	---------	---------	---------	-----	-----	--------	-----
	MACHINERY AND EQUIPM									
	VEHICLES									
	PICK UP TRUCKS	7420								
----------			---------	---------	---------	---------	-----	-----	--------	-----
	VEHICLES									
----------			---------	---------	---------	---------	-----	-----	--------	-----
	CAPITAL OUTLAY									
----------			---------	---------	---------	---------	-----	-----	--------	-----
66,356	**EXPENDITURES**		**1,025,482**	**13,385**	**66,356**	**945,741**	**8%**	**6%**	**(229,210)**	**-22%**

CITY OF HATTIESBURG
002341 - PKS/REC-KAMPER PARK ZOO DIV.
EXPENDITURE REPORT
1 Months Ending 10/31/12

THIS MONTH ACTUAL		OBJ/SUB	ANNUAL BUDGET	OPEN PO & CONTRACTS	YTD ACTUAL	REMAINING BALANCE	PERCENT PLAN	PERCENT ACTUAL	....PROJECTED.... OVER/UNDER	%
	_____									
	_____									
	SALARIES									
	REGULAR WAGES	4000								
	DISASTER RECOVERY WAGE	4010								
	OVERTIME	4300								
	DISASTER RECOVERY OVER	4310								
---			---	---	---	---	---	---	---	---
	SALARIES									
	EMPLOYEE BENEFITS									
	STATE RETIREMENT	4600								
	F.I.C.A. TAXES	4700								
	HOSPITALIZATION INS.	4800								
	UNEMPLOYMENT BENEFITS	4900								
	WORKMAN'S COMPENSATION	4910								
---			---	---	---	---	---	---	---	---
	EMPLOYEE BENEFITS									
---			---	---	---	---	---	---	---	---
	PERSONAL SERVICES									
	_____									
	OFFICE SUPPLIES									
	PAPER	5003								
	PRINTED FORMS	5005								
	OTHER EXPENDABLE OFF.S	5010								
	MINOR OFFICE EQUIP/FUR	5020								
	PHOTO SUPPLIES	5040								
	SUBSCRIPTIONS,MAGS,MAP	5050								
	BOOKS	5070								
---			---	---	---	---	---	---	---	---
	OFFICE SUPPLIES									
	OPERATING SUPPLIES									
	CLEANING/JANITORIAL SP	5100								
	HOUSEHOLD SUPPLIES	5110								
	MEDICAL SUPPLIES	5120								
	CHEMICALS	5130								
	FEED FOR ANIMALS	5150								
	ANIMAL SUPPLIES	5160								

			CITY OF HATTIESBURG							
	002341 - PKS/REC-KAMPER PARK ZOO DIV.		EXPENDITURE REPORT							
			1 Months Ending 10/31/12							
THIS MONTH			ANNUAL	OPEN PO	YTD	REMAINING	PERCENT		....PROJECTED....	
ACTUAL		OBJ/SUB	BUDGET	& CONTRACTS	ACTUAL	BALANCE	PLAN	ACTUAL	OVER/UNDER	%
	GAS AND OIL	5250								
	LUBRICANTS	5255								
	DIESEL FUEL	5257								
	OTHER FUEL	5260								
	WEARING APPAREL	5355								
	CONCRETE, CEMENT, ETC.	5405								
	SAND,CLAY,GRVL,FILL DI	5415								
	HORT./LANDSCAPING SPLY	5440								
	HAND TOOLS	5450								
	MINOR EQUIPMENT	5460								
	RECREATIONAL SUPPLIES	5510								
	CONCESSION SUPPLIES	5515								
	MDSE FOR RESALE-GIFTSH	5520								
	MDSE FOR RESALE-CONCES	5522								
	TRAFFIC SIGNS	5545								
	OTHER OPERATING MATL/S	5590								
---			---	---	---	---	---	---	---	---
	OPERATING SUPPLIES									
	REPAIR & MAINTENANCE SP									
	BUILDING MATERIALS & S	5600								
	ELECTRICAL SUPPLIES	5605								
	PLUMBING SUPPLIES	5610								
	STRUCTURAL STEEL & IRO	5620								
	PAINT AND PAINTING SPL	5650								
	MTR VEHICLE REP. PTS/S	5700								
	COMMUNICATION REPAIR P	5750								
	AGRICLTRL REPAIR PTS/S	5755								
	RECREATIONAL EQ. REP P	5765								
	OTHER REPAIR/MAINT. SP	5990								
---			---	---	---	---	---	---	---	---
	REPAIR & MAINTENANCE									
---			---	---	---	---	---	---	---	---
	SUPPLIES AND EXPENSES									
	_____									
	PROFESSIONAL SERVICES									
	VETERINARIAN	6030								
	OTHER PROFESSIONAL SER	6049								

CITY OF HATTIESBURG
002341 - PKS/REC-KAMPER PARK ZOO DIV.
EXPENDITURE REPORT
1 Months Ending 10/31/12

THIS MONTH ACTUAL		OBJ/SUB	ANNUAL BUDGET	OPEN PO & CONTRACTS	YTD ACTUAL	REMAINING BALANCE	PERCENT PLAN	PERCENT ACTUAL	....PROJECTED.... OVER/UNDER	%
	OTHER PROF SERV-KPZ CO	6049 98								
---			---	---	---	---	---	---	---	---
	PROFESSIONAL SERVICE									
	COMMUNICATIONS									
	TELEPHONE AND TELEGRAP	6060								
	POSTAGE	6070								
---			---	---	---	---	---	---	---	---
	COMMUNICATIONS									
	TRANSPORTATION									
	TRAVEL EXPENSE	6110								
	FREIGHT	6120								
	MESSENGER/EXPRESS SERV	6130								
---			---	---	---	---	---	---	---	---
	TRANSPORTATION									
	ADVERTISING									
	ADVERTISING	6150								
---			---	---	---	---	---	---	---	---
	ADVERTISING									
	PRINTING AND BINDING									
	PRINTING	6200								
	FILM PROCESSING	6240								
---			---	---	---	---	---	---	---	---
	PRINTING AND BINDING									
	INSURANCE									
	PUBLIC LIAB/PROPERTY D	6255								
	BOILER MACHINERY	6260								
	AUTOMOBILE INSURANCE	6265								
---			---	---	---	---	---	---	---	---
	INSURANCE									
	UTILITIES									
	GAS	6300								
	ELECTRICITY	6305								
---			---	---	---	---	---	---	---	---
	UTILITIES									
	REPR/MAINT-OUTSIDE LABO									
	BUILDING R&M	6350								
	ELECTRICAL R&M	6355								

			CITY OF HATTIESBURG							
	002341 - PKS/REC-KAMPER PARK ZOO DIV.		EXPENDITURE REPORT							
			1 Months Ending 10/31/12							
THIS MONTH			ANNUAL	OPEN PO	YTD	REMAINING	PERCENT		....PROJECTED....	
ACTUAL		OBJ/SUB	BUDGET	& CONTRACTS	ACTUAL	BALANCE	PLAN	ACTUAL	OVER/UNDER	%
	PLUMBING EQUIPMENT R&M	6357								
	OFFICE EQUIPMENT R&M	6365								
	HOUSEHOLD EQUIPMENT R&	6370								
	FIXED EQUIPMENT R&M	6380								
	MINOR EQUIPMENT R&M	6382								
	MOTOR VEHICLE EQ. R&M	6384								
	AGRICULTURAL EQ. R&M	6387								
	RECREATIONAL EQ. R&M	6388								
	COMMUNICATION EQ. R&M	6390								
	DISINFECT./EXTERMINATI	6394								
	SIGN PAINTING	6396								
	TOW IN CHARGES	6398								
	OTHER REPAIRS AND MAIN	6399								
---			---	---	---	---	---	---	---	---
	REPR/MAINT-OUTSIDE L									
	RENTALS									
	LAND RENT	6400								
	BUILDING RENT	6405								
	MACHINERY RENT	6420								
	CYLINDER RENT	6425								
	UNIFORM RENT	6430								
	MOP-MAT-RAG RENT	6435								
	OTHER RENT	6449								
---			---	---	---	---	---	---	---	---
	RENTALS									
	OTHER SERVICES & CHARGE									
	THEFT LOSS	6818								
	DUES AND MEMBERSHIPS	6840								
	REGISTRATION FEE/TUITI	6845								
	CUSTODIAL SERVICE	6870								
	SALES TAX-KPZ RIDES	6996								
	SERVICES NOT SPECIFIED	6999								
---			---	---	---	---	---	---	---	---
	OTHER SERVICES & CHA									
---			---	---	---	---	---	---	---	---
	OTHER SERVICES & CHAR									
	_____									

			CITY OF HATTIESBURG							
	002341 - PKS/REC-KAMPER PARK ZOO DIV.		EXPENDITURE REPORT							
			1 Months Ending 10/31/12							
THIS MONTH			ANNUAL	OPEN PO	YTD	REMAINING	PERCENT		....PROJECTED....	
ACTUAL		OBJ/SUB	BUDGET	& CONTRACTS	ACTUAL	BALANCE	PLAN	ACTUAL	OVER/UNDER	%
	BUILDING/BLD IMPROVEMEN									
	BUILDINGS	7100								
	K.P CONCESSION STAND	7100 06								
	REHAB. EXISTING BLDGS	7100 12								
---			---	---	---	---	---	---	---	---
	BUILDINGS									
	BUILDING IMPROVEMENTS	7150								
	ED CENTER HOLDING ARE	7150 08								
---			---	---	---	---	---	---	---	---
	BUILDING IMPROVEMEN									
---			---	---	---	---	---	---	---	---
	BUILDING/BLD IMPROVE									
	IMPROVEMENT OTHER THAN									
	PARKING LOT/DRIVEWAY	7227								
	STREETS & ROADWAYS	7230								
	PARK & PLAYGROUND LIGH	7240								
	LANDSCAPING	7250								
	OTHER IMPROVEMENTS	7295								
	TIGER EXHIBIT	7295 14								
	ZEBRA EXHIBIT	7295 17								
	SMALL ANIMAL EXHIBITS	7295 23								
	AFRICAN EXHIBIT	7295 25								
	PRAIRIE DOG EXHIBIT	7295 48								
	MISC.OTHER IMPROVEMEN	7295 99								
---			---	---	---	---	---	---	---	---
	OTHER IMPROVEMENTS									
---			---	---	---	---	---	---	---	---
	IMPROVEMENT OTHER TH									
	MACHINERY AND EQUIPMENT									
	HOUSEHOLD FURN/EQUIP.	7320								
	DATA PROCESSING EQUIP.	7327								
	AGRICULTURAL EQUIPMENT	7335								
	RECREATIONAL EQUIPMENT	7350								
	COMMUNICATION EQUIPMEN	7355								
	OTHER EQUIPMENT	7399								
---			---	---	---	---	---	---	---	---
	MACHINERY AND EQUIPM									

			CITY OF HATTIESBURG							
	002341 - PKS/REC-KAMPER PARK ZOO DIV.		EXPENDITURE REPORT							
			1 Months Ending 10/31/12							
THIS MONTH			ANNUAL	OPEN PO	YTD	REMAINING	PERCENT		....PROJECTED....	
ACTUAL		OBJ/SUB	BUDGET	& CONTRACTS	ACTUAL	BALANCE	PLAN	ACTUAL	OVER/UNDER	%
	VEHICLES									
	AUTOMOBILES	7400								
	PICK UP TRUCKS	7420								
---			---	---	---	---	---	---	---	---
	VEHICLES									
	OTHER									
	ZOOLOGICAL ANIMALS	7505								
---			---	---	---	---	---	---	---	---
	OTHER									
---			---	---	---	---	---	---	---	---
	CAPITAL OUTLAY									
---			---	---	---	---	---	---	---	---
	EXPENDITURES									

			CITY OF HATTIESBURG							
	004369 - LIBRARY FUND EXPENDITURES		EXPENDITURE REPORT							
			1 Months Ending 10/31/12							
THIS MONTH			ANNUAL	OPEN PO	YTD	REMAINING	PERCENT		....PROJECTED....	
ACTUAL		OBJ/SUB	BUDGET	& CONTRACTS	ACTUAL	BALANCE	PLAN	ACTUAL	OVER/UNDER	%
	OTHER SERVICES & CHARGE									
238	PROP.TAX COLL. FEES .0	6830			238	(238)			2,856	
	PROP.TAX COLL. FEES.00	6831								
---			---	---	---	---	---	---	---	---
238	**OTHER SERVICES & CHA**				**238**	**(238)**			**2,856**	
---			---	---	---	---	---	---	---	---
238	**OTHER SERVICES & CHAR**				**238**	**(238)**			**2,856**	
---			---	---	---	---	---	---	---	---
238	**EXPENDITURES**				**238**	**(238)**			**2,856**	

			CITY OF HATTIESBURG							
	005160 - H.M.F.P.FUND-FIRE DIVISION		EXPENDITURE REPORT							
			1 Months Ending 10/31/12							
THIS MONTH			ANNUAL	OPEN PO	YTD	REMAINING	PERCENT		....PROJECTED....	
ACTUAL		OBJ/SUB	BUDGET	& CONTRACTS	ACTUAL	BALANCE	PLAN	ACTUAL	OVER/UNDER	%
	OFFICE SUPPLIES									
	MINOR OFFICE EQUIP/FUR	5020	2,000			2,000	8%	0%	(2,000)	-100%
	PUBLIC EDUCATION MAT'L	5032	1,500			1,500	8%	0%	(1,500)	-100%
---			---	---	---	---	---	---	---	---
	OFFICE SUPPLIES		**3,500**			**3,500**	**8%**	**0%**	**(3,500)**	**-100%**
	OPERATING SUPPLIES									
	GAS AND OIL	5250								
	WEARING APPAREL	5355	65,000			65,000	8%	0%	(65,000)	-100%
	MINOR EQUIPMENT	5460								
	MINOR FIRE FIGHTING EQ	5462								
	HAZ.MAT SUPPLIES	5466								
	FIRE HOSE	5470								
	SFTY/FIRE P/MATL CONTR	5535	1,500			1,500	8%	0%	(1,500)	-100%
	OTHER OPER.MATLS-USM	5590								
---			---	---	---	---	---	---	---	---
	OPERATING SUPPLIES		**66,500**			**66,500**	**8%**	**0%**	**(66,500)**	**-100%**
	REPAIR & MAINTENANCE SP									
	MTR VEHICLE REP. PTS/S	5700								
	COMMUNICATION REPAIR P	5750								
	MINOR COMPUTER EQUIP.	5800	2,000	1,458		542	8%	0%	(2,000)	-100%
---			---	---	---	---	---	---	---	---
	REPAIR & MAINTENANCE		**2,000**	**1,458**		**542**	**8%**	**0%**	**(2,000)**	**-100%**
---			---	---	---	---	---	---	---	---
	SUPPLIES AND EXPENSES		**72,000**	**1,458**		**70,542**	**8%**	**0%**	**(72,000)**	**-100%**
	OTHER PROFESSIONAL SER	6049	22,000			22,000	8%	0%	(22,000)	-100%
	TRANSPORTATION									
	TRAVEL EXPENSE	6110	3,500			3,500	8%	0%	(3,500)	-100%
---			---	---	---	---	---	---	---	---
	TRANSPORTATION		**3,500**			**3,500**	**8%**	**0%**	**(3,500)**	**-100%**
	REPR/MAINT-OUTSIDE LABO									
	BUILDING R&M (USM)	6350								
	MOTOR VEHICLE EQ. R&M	6384	5,000			5,000	8%	0%	(5,000)	-100%
	COMMUNICATION EQ. R&M	6390								
---			---	---	---	---	---	---	---	---

			CITY OF HATTIESBURG							
	005160 - H.M.F.P.FUND-FIRE DIVISION		EXPENDITURE REPORT							
			1 Months Ending 10/31/12							
THIS MONTH			ANNUAL	OPEN PO	YTD	REMAINING	PERCENT		....PROJECTED....	
ACTUAL		OBJ/SUB	BUDGET	& CONTRACTS	ACTUAL	BALANCE	PLAN	ACTUAL	OVER/UNDER	%
	REPR/MAINT-OUTSIDE L		**5,000**			**5,000**	**8%**	**0%**	**(5,000)**	**-100%**
	OTHER SERVICES & CHARGE									
	BANK SERV/TRF FEE	6832								
10,000	REGISTRATION FEE/TUITI	6845	14,000		10,000	4,000	8%	71%	106,000	757%
---			---	---	---	---	---	---	---	---
10,000	**OTHER SERVICES & CHA**		**14,000**		**10,000**	**4,000**	**8%**	**71%**	**106,000**	**757%**
---			---	---	---	---	---	---	---	---
10,000	**OTHER SERVICES & CHAR**		**44,500**		**10,000**	**34,500**	**8%**	**22%**	**75,500**	**170%**
	_____									
	LAND									
	LAND	7000								
---			---	---	---	---	---	---	---	---
	LAND									
	BUILDING/BLD IMPROVEMEN									
	BUILDINGS	7100								
	FIRE DRILL TOWER	7100 02	20,000			20,000	8%	0%	(20,000)	-100%
	FIRE STATIONS	7100 20	241,861			241,861	8%	0%	(241,861)	-100%
---			---	---	---	---	---	---	---	---
	BUILDINGS		**261,861**			**261,861**	**8%**	**0%**	**(261,861)**	**-100%**
	BUILDING IMPROVEMENTS	7150								
	FIRE STA IMPR-USM MON	7150 30								
---			---	---	---	---	---	---	---	---
	BUILDING IMPROVEMEN									
---			---	---	---	---	---	---	---	---
	BUILDING/BLD IMPROVE		**261,861**			**261,861**	**8%**	**0%**	**(261,861)**	**-100%**
	IMPROVEMENT OTHER THAN									
	PARKING LOT/DRIVEWAY	7227								
	LANDSCAPING	7250								
	OTHER IMPROVEMENTS	7295								
	OTHER IMPROVEMENTS-USM	7297	6,900			6,900	8%	0%	(6,900)	-100%
---			---	---	---	---	---	---	---	---
	IMPROVEMENT OTHER TH		**6,900**			**6,900**	**8%**	**0%**	**(6,900)**	**-100%**
	MACHINERY AND EQUIPMENT									
	FIRE FIGHTING	7315	20,000			20,000	8%	0%	(20,000)	-100%
	HOUSEHOLD FURN/EQUIP.	7320								
	OFFICE FURN/EQUIP.	7325								
	DATA PROCESSING EQUIP.	7327	40,000			40,000	8%	0%	(40,000)	-100%

			CITY OF HATTIESBURG							
	005160 - H.M.F.P.FUND-FIRE DIVISION		EXPENDITURE REPORT							
			1 Months Ending 10/31/12							
THIS MONTH			ANNUAL	OPEN PO	YTD	REMAINING	PERCENT		....PROJECTED....	
ACTUAL		OBJ/SUB	BUDGET	& CONTRACTS	ACTUAL	BALANCE	PLAN	ACTUAL	OVER/UNDER	%
	AGRICULTURAL EQUIPMENT	7335								
6,728	COMMUNICATION EQUIPMEN	7355	50,000		6,728	43,272	8%	13%	30,736	61%
	COMMUNICATION EQ-USM	7356								
	HYDRANTS & METERS(USM)	7365	10,000			10,000	8%	0%	(10,000)	-100%
	OTHER EQUIP-USM MONIES	7398								
	OTHER EQUIPMENT	7399	35,000			35,000	8%	0%	(35,000)	-100%
---			---	---	---	---	---	---	---	---
6,728	**MACHINERY AND EQUIPM**		**155,000**		**6,728**	**148,272**	**8%**	**4%**	**(74,264)**	**-48%**
	VEHICLES									
	AUTOMOBILES	7400								
	MOTORCYCLES	7405								
	BUSES	7410								
	PICK UP TRUCKS	7420								
	HEAVY TRUCKS	7430								
	FIRE TRUCKS	7435								
---			---	---	---	---	---	---	---	---
	VEHICLES									
---			---	---	---	---	---	---	---	---
6,728	**CAPITAL OUTLAY**		**423,761**		**6,728**	**417,033**	**8%**	**2%**	**(343,025)**	**-81%**
---			---	---	---	---	---	---	---	---
16,728	**EXPENDITURES**		**540,261**	**1,458**	**16,728**	**522,075**	**8%**	**3%**	**(339,525)**	**-63%**

CITY OF HATTIESBURG
005460 - H.M.F.P.FUND-CAPITAL LEASES
EXPENDITURE REPORT
1 Months Ending 10/31/12

THIS MONTH ACTUAL		OBJ/SUB	ANNUAL BUDGET	OPEN PO & CONTRACTS	YTD ACTUAL	REMAINING BALANCE	PERCENT PLAN	PERCENT ACTUAL	....PROJECTED.... OVER/UNDER	%
	CAPITAL LEASE PAYMENTS									
	MDB-BLDG-FIRE STA #8	8515								
	FIRE TRUCKS LEASE-A'04	8527								
	FIRE TRUCKS LEASE-B'04	8528								
	FIRE TRUCKS LEASE-'06	8529								
	FIRE PROT.EQUIP.LEASE	8530								
12,225	FIRE TRUCKS LEASE-'11	8532	148,560		12,225	136,335	8%	8%	(1,860)	-1%
---			---	---	---	---	---	---	---	---
12,225	**CAPITAL LEASE PAYMEN**		**148,560**		**12,225**	**136,335**	**8%**	**8%**	**(1,860)**	**-1%**
	INTEREST ON CAPITAL LEA									
	MDB-BLDG-FIRE STA #8	8615								
	FIRE TRUCKS LEASE-A'04	8627								
	FIRE TRUCKS LEASE-B'04	8628								
	FIRE TRUCKS LEASE-'06	8629								
	FIRE PROT.EQUIP.LEASE	8630								
2,116	FIRE TRUCKS LEASE-'11	8632	23,540		2,116	21,424	8%	9%	1,852	8%
---			---	---	---	---	---	---	---	---
2,116	**INTEREST ON CAPITAL**		**23,540**		**2,116**	**21,424**	**8%**	**9%**	**1,852**	**8%**
---			---	---	---	---	---	---	---	---
14,341	**DEBT SERVICE**		**172,100**		**14,341**	**157,759**	**8%**	**8%**	**(8)**	**0%**
---			---	---	---	---	---	---	---	---
14,341	**EXPENDITURES**		**172,100**		**14,341**	**157,759**	**8%**	**8%**	**(8)**	**0%**

CITY OF HATTIESBURG
EXPENDITURE REPORT
1 Months Ending 10/31/12

008201 - SPEC.ST.IMPR-STREET DIV.

THIS MONTH ACTUAL		OBJ/SUB	ANNUAL BUDGET	OPEN PO & CONTRACTS	YTD ACTUAL	REMAINING BALANCE	PERCENT PLAN	PERCENT ACTUAL	....PROJECTED.... OVER/UNDER	%
	OPERATING SUPPLIES									
	CHEMICALS	5130								
	GAS AND OIL	5250								
	LUBRICANTS	5255								
	OTHER FUEL	5260								
	ASPHALT & ASPHALT PROD	5400								
	CONCRETE, CEMENT, ETC.	5405								
	BRICK,STONE,MORTAR,ETC	5410								
	SAND,CLAY,GRVL,FILL DI	5415								
	DRAINAGE PIPE & CULVER	5420								
	HORT./LANDSCAPING SPLY	5440								
	MINOR EQUIPMENT	5460								
	TRAFFIC CONTROL EQ. SP	5540								
---			---	---	---	---	---	---	---	---
	OPERATING SUPPLIES									
	REPAIR & MAINTENANCE SP									
	BUILDING MATERIALS & S	5600								
	PLUMBING SUPPLIES	5610								
	STRUCTURAL STEEL & IRO	5620								
---			---	---	---	---	---	---	---	---
	REPAIR & MAINTENANCE									
---			---	---	---	---	---	---	---	---
	SUPPLIES AND EXPENSES									
	PROFESSIONAL SERVICES									
	OTHER PROFESSIONAL SER	6049								
---			---	---	---	---	---	---	---	---
	PROFESSIONAL SERVICE									
	REPR/MAINT-OUTSIDE LABO									
	STREETS & STRUCTURES R	6360	261,000			261,000	8%	0%	(261,000)	-100%
---			---	---	---	---	---	---	---	---
	REPR/MAINT-OUTSIDE L		**261,000**			**261,000**	**8%**	**0%**	**(261,000)**	**-100%**
---			---	---	---	---	---	---	---	---
	OTHER SERVICES & CHAR		**261,000**			**261,000**	**8%**	**0%**	**(261,000)**	**-100%**

			CITY OF HATTIESBURG							
	008201 - SPEC.ST.IMPR-STREET DIV.		EXPENDITURE REPORT							
			1 Months Ending 10/31/12							
THIS MONTH			ANNUAL	OPEN PO	YTD	REMAINING	PERCENT		....PROJECTED....	
ACTUAL		OBJ/SUB	BUDGET	& CONTRACTS	ACTUAL	BALANCE	PLAN	ACTUAL	OVER/UNDER	%
	LAND									
	LAND	7000								
	EASEMENTS	7010								
	STREETS & ROADWAYS	7230								
	4TH STREET	7230 09								
	LINCOLN RD-FAUS-#1	7230 12								
	LINCOLN RD-FAUS-#2	7230 17								
	LINCOLN RD-FAUS-#3	7230 27								
	LINCOLN RD-FAUS-#4	7230 29								
	CLASSIC DR-FAUS	7230 36								
	SOUTH 28TH-FAUS	7230 37								
	WALMART/TIF PROJECT	7230 80								
---			---	---	---	---	---	---	---	---
	STREETS & ROADWAYS									
---			---	---	---	---	---	---	---	---
	LAND									
---			---	---	---	---	---	---	---	---
	CAPITAL OUTLAY									
---			---	---	---	---	---	---	---	---
	EXPENDITURES		**261,000**			**261,000**	**8%**	**0%**	**(261,000)**	**-100%**

CITY OF HATTIESBURG
009660 - W&S O&M-CUSTOMER ACCT.DIV.
EXPENDITURE REPORT
1 Months Ending 10/31/12

THIS MONTH ACTUAL		OBJ/SUB	ANNUAL BUDGET	OPEN PO & CONTRACTS	YTD ACTUAL	REMAINING BALANCE	PERCENT PLAN	PERCENT ACTUAL	....PROJECTED.... OVER/UNDER	%
	SALARIES									
12,282	REGULAR WAGES	4000	159,670		12,282	147,388	8%	8%	(12,286)	-8%
	DISASTER RECOVERY WAGE	4010								
	OVERTIME	4300								
	DISASTER RECOVERY OVER	4310								
---			---	---	---	---	---	---	---	---
12,282	**SALARIES**		**159,670**		**12,282**	**147,388**	**8%**	**8%**	**(12,286)**	**-8%**
	EMPLOYEE BENEFITS									
1,751	STATE RETIREMENT	4600	22,770		1,751	21,019	8%	8%	(1,758)	-8%
901	F.I.C.A. TAXES	4700	12,220		901	11,319	8%	7%	(1,408)	-12%
2,716	HOSPITALIZATION INS.	4800	36,540		2,716	33,824	8%	7%	(3,948)	-11%
	UNEMPLOYMENT BENEFITS	4900								
	WORKMAN'S COMPENSATION	4910	608			608	8%	0%	(608)	-100%
---			---	---	---	---	---	---	---	---
5,368	**EMPLOYEE BENEFITS**		**72,138**		**5,368**	**66,770**	**8%**	**7%**	**(7,722)**	**-11%**
---			---	---	---	---	---	---	---	---
17,650	**PERSONAL SERVICES**		**231,808**		**17,650**	**214,158**	**8%**	**8%**	**(20,008)**	**-9%**
	OFFICE SUPPLIES									
	PAPER	5003	2,500			2,500	8%	0%	(2,500)	-100%
	PRINTED FORMS	5005								
	OTHER EXPENDABLE OFF.S	5010	1,648			1,648	8%	0%	(1,648)	-100%
248	MINOR OFFICE EQUIP/FUR	5020	475		248	227	8%	52%	2,501	527%
285	BOOKS	5070	475		285	190	8%	60%	2,945	620%
---			---	---	---	---	---	---	---	---
533	**OFFICE SUPPLIES**		**5,098**		**533**	**4,565**	**8%**	**10%**	**1,298**	**25%**
	OPERATING SUPPLIES									
	CLEANING/JANITORIAL SP	5100	300			300	8%	0%	(300)	-100%
	MEDICAL SUPPLIES	5120								
	GAS AND OIL	5250	150			150	8%	0%	(150)	-100%
	LUBRICANTS	5255								
	CONCRETE, CEMENT, ETC.	5405								
	HAND TOOLS	5450								
	MINOR EQUIPMENT	5460	150			150	8%	0%	(150)	-100%
	METER LOCKS	5467	950			950	8%	0%	(950)	-100%

CITY OF HATTIESBURG
009660 - W&S O&M-CUSTOMER ACCT.DIV.
EXPENDITURE REPORT
1 Months Ending 10/31/12

THIS MONTH ACTUAL		OBJ/SUB	ANNUAL BUDGET	OPEN PO & CONTRACTS	YTD ACTUAL	REMAINING BALANCE	PERCENT PLAN	PERCENT ACTUAL	....PROJECTED.... OVER/UNDER	%
	OTHER OPERATING MATL/S	5590	300			300	8%	0%	(300)	-100%
	OPERATING SUPPLIES		**1,850**			**1,850**	**8%**	**0%**	**(1,850)**	**-100%**
	REPAIR & MAINTENANCE SP									
23	ELECTRICAL SUPPLIES	5605	285		23	262	8%	8%	(9)	-3%
	MTR VEHICLE REP. PTS/S	5700								
	COMMUNICATION REPAIR P	5750	285			285	8%	0%	(285)	-100%
	OTHER REPAIR/MAINT. SP	5990	450			450	8%	0%	(450)	-100%
23	**REPAIR & MAINTENANCE**		**1,020**		**23**	**997**	**8%**	**2%**	**(744)**	**-73%**
556	**SUPPLIES AND EXPENSES**		**7,968**		**556**	**7,412**	**8%**	**7%**	**(1,296)**	**-16%**
	PROFESSIONAL SERVICES									
	AUDITING AND ACCOUNTIN	6010	15,000			15,000	8%	0%	(15,000)	-100%
	APPRAISAL	6017								
	LEGAL	6025								
	MEDICAL	6027								
537	OTHER PROFESSIONAL SER	6049	19,000		537	18,463	8%	3%	(12,556)	-66%
537	**PROFESSIONAL SERVICE**		**34,000**		**537**	**33,463**	**8%**	**2%**	**(27,556)**	**-81%**
	COMMUNICATIONS									
12	TELEPHONE AND TELEGRAP	6060	5,220		12	5,208	8%	0%	(5,076)	-97%
3,500	POSTAGE	6070	49,000		3,500	45,500	8%	7%	(7,000)	-14%
3,512	**COMMUNICATIONS**		**54,220**		**3,512**	**50,708**	**8%**	**6%**	**(12,076)**	**-22%**
	TRANSPORTATION									
	FREIGHT	6120	95			95	8%	0%	(95)	-100%
	TRANSPORTATION		**95**			**95**	**8%**	**0%**	**(95)**	**-100%**
	ADVERTISING									
	ADVERTISING	6150	95			95	8%	0%	(95)	-100%
	ADVERTISING		**95**			**95**	**8%**	**0%**	**(95)**	**-100%**
	PRINTING AND BINDING									
	PRINTING	6200	9,825			9,825	8%	0%	(9,825)	-100%

CITY OF HATTIESBURG
009660 - W&S O&M-CUSTOMER ACCT.DIV.
EXPENDITURE REPORT
1 Months Ending 10/31/12

THIS MONTH ACTUAL		OBJ/SUB	ANNUAL BUDGET	OPEN PO & CONTRACTS	YTD ACTUAL	REMAINING BALANCE	PERCENT PLAN	PERCENT ACTUAL	....PROJECTED.... OVER/UNDER	%
	PRINTING AND BINDING		**9,825**			**9,825**	**8%**	**0%**	**(9,825)**	**-100%**
	INSURANCE									
	AUTOMOBILE INSURANCE	6265								
---			---	---	---	---	---	---	---	---
	INSURANCE									
	UTILITIES									
13	GAS	6300	1,900		13	1,887	8%	1%	(1,744)	-92%
534	ELECTRICITY	6305	5,500		534	4,966	8%	10%	908	17%
---			---	---	---	---	---	---	---	---
547	**UTILITIES**		**7,400**		**547**	**6,853**	**8%**	**7%**	**(836)**	**-11%**
	REPR/MAINT-OUTSIDE LABO									
	BUILDING R&M	6350	3,800			3,800	8%	0%	(3,800)	-100%
	OFFICE EQUIPMENT R&M	6365	1,600			1,600	8%	0%	(1,600)	-100%
	FIXED EQUIPMENT R&M	6380	2,945			2,945	8%	0%	(2,945)	-100%
	MOTOR VEHICLE EQ. R&M	6384								
	COMMUNICATION EQ. R&M	6390								
74	DISINFECT./EXTERMINATI	6394	800		74	726	8%	9%	88	11%
	OTHER REPAIRS AND MAIN	6399	1,045			1,045	8%	0%	(1,045)	-100%
---			---	---	---	---	---	---	---	---
74	**REPR/MAINT-OUTSIDE L**		**10,190**		**74**	**10,116**	**8%**	**1%**	**(9,302)**	**-91%**
	RENTALS									
	BUILDING RENT	6405								
	OFFICE EQUIPMENT RENT	6410								
	UNIFORM RENT	6430								
	MOP-MAT-RAG RENT	6435								
	OTHER RENT	6449								
---			---	---	---	---	---	---	---	---
	RENTALS									
	OTHER SERVICES & CHARGE									
	CASH OVERAGE/SHORTAGE	6819								
	BANK SERV/TRF FEE	6832	190			190	8%	0%	(190)	-100%
	REFUNDS	6835								
	WATER RELATED REFUND	6835 WTR								
---			---	---	---	---	---	---	---	---
	REFUNDS									
	NSF CHECKS	6836								
	DUES AND MEMBERSHIPS	6840								

			CITY OF HATTIESBURG							
	009660 - W&S O&M-CUSTOMER ACCT.DIV.		EXPENDITURE REPORT							
			1 Months Ending 10/31/12							
THIS MONTH			ANNUAL	OPEN PO	YTD	REMAINING	PERCENT		....PROJECTED....	
ACTUAL		OBJ/SUB	BUDGET	& CONTRACTS	ACTUAL	BALANCE	PLAN	ACTUAL	OVER/UNDER	%
	REGISTRATION FEE/TUITI	6845	190			190	8%	0%	(190)	-100%
	SERVICES NOT SPECIFIED	6999	5,525			5,525	8%	0%	(5,525)	-100%
---			---	---	---	---	---	---	---	---
	OTHER SERVICES & CHA		**5,905**			**5,905**	**8%**	**0%**	**(5,905)**	**-100%**
---			---	---	---	---	---	---	---	---
4,671	**OTHER SERVICES & CHAR**		**121,730**		**4,671**	**117,059**	**8%**	**4%**	**(65,678)**	**-54%**
	_____									
	BUILDING/BLD IMPROVEMEN									
	BUILDING IMPROVEMENTS	7150								
	WATER OFFICE RENOVATI	7150 16								
---			---	---	---	---	---	---	---	---
	BUILDING IMPROVEMEN									
---			---	---	---	---	---	---	---	---
	BUILDING/BLD IMPROVE									
	MACHINERY AND EQUIPMENT									
	OFFICE FURN/EQUIP.	7325								
	DATA PROCESSING EQUIP.	7327								
	WATER UTILITY SOFTWARE	7329								
	CONSTRUCTION EQUIPMENT	7345								
	COMMUNICATION EQUIPMEN	7355								
	OTHER EQUIPMENT	7399								
---			---	---	---	---	---	---	---	---
	MACHINERY AND EQUIPM									
	VEHICLES									
	AUTOMOBILES	7400								
	PICK UP TRUCKS	7420								
	SPECIAL TRUCKS	7450								
---			---	---	---	---	---	---	---	---
	VEHICLES									
---			---	---	---	---	---	---	---	---
	CAPITAL OUTLAY									
---			---	---	---	---	---	---	---	---
22,877	**EXPENDITURES**		**361,506**		**22,877**	**338,629**	**8%**	**6%**	**(86,982)**	**-24%**

CITY OF HATTIESBURG
009672 - W&S O&M-WATER TRANSMISSION DIV
EXPENDITURE REPORT
1 Months Ending 10/31/12

THIS MONTH ACTUAL		OBJ/SUB	ANNUAL BUDGET	OPEN PO & CONTRACTS	YTD ACTUAL	REMAINING BALANCE	PERCENT PLAN	PERCENT ACTUAL	....PROJECTED.... OVER/UNDER	%
	SALARIES									
29,322	REGULAR WAGES	4000	579,603		29,322	550,281	8%	5%	(227,739)	-39%
	DISASTER RECOVERY WAGE	4010								
2,416	OVERTIME	4300	25,000		2,416	22,584	8%	10%	3,992	16%
	DISASTER RECOVERY OVER	4310								
---			---	---	---	---	---	---	---	---
31,738	**SALARIES**		**604,603**		**31,738**	**572,865**	**8%**	**5%**	**(223,747)**	**-37%**
	EMPLOYEE BENEFITS									
4,490	STATE RETIREMENT	4600	86,220		4,490	81,730	8%	5%	(32,340)	-38%
2,386	F.I.C.A. TAXES	4700	46,260		2,386	43,874	8%	5%	(17,628)	-38%
5,820	HOSPITALIZATION INS.	4800	130,500		5,820	124,680	8%	4%	(60,660)	-46%
	UNEMPLOYMENT BENEFITS	4900	4,000			4,000	8%	0%	(4,000)	-100%
	WORKMAN'S COMPENSATION	4910	25,950			25,950	8%	0%	(25,950)	-100%
---			---	---	---	---	---	---	---	---
12,695	**EMPLOYEE BENEFITS**		**292,930**		**12,695**	**280,235**	**8%**	**4%**	**(140,590)**	**-48%**
---			---	---	---	---	---	---	---	---
44,433	**PERSONAL SERVICES**		**897,533**		**44,433**	**853,100**	**8%**	**5%**	**(364,337)**	**-41%**
	OFFICE SUPPLIES									
	PAPER	5003								
	PRINTED FORMS	5005								
	OTHER EXPENDABLE OFF.S	5010								
	MINOR OFFICE EQUIP/FUR	5020								
	SUBSCRIPTIONS,MAGS,MAP	5050								
---			---	---	---	---	---	---	---	---
	OFFICE SUPPLIES									
	OPERATING SUPPLIES									
	CLEANING/JANITORIAL SP	5100								
	MEDICAL SUPPLIES	5120								
	CHEMICALS	5130								
2,055	GAS AND OIL	5250	86,000		2,055	83,945	8%	2%	(61,340)	-71%
	NATURAL GAS FUEL	5252								
	LUBRICANTS	5255								
302	DIESEL FUEL	5257	8,000		302	7,698	8%	4%	(4,376)	-55%
	WEARING APPAREL	5355	300			300	8%	0%	(300)	-100%

CITY OF HATTIESBURG
009672 - W&S O&M-WATER TRANSMISSION DIV
EXPENDITURE REPORT
1 Months Ending 10/31/12

THIS MONTH ACTUAL		OBJ/SUB	ANNUAL BUDGET	OPEN PO & CONTRACTS	YTD ACTUAL	REMAINING BALANCE	PERCENT PLAN	PERCENT ACTUAL	....PROJECTED.... OVER/UNDER	%
	ASPHALT & ASPHALT PROD	5400								
(11)	CONCRETE, CEMENT, ETC.	5405	9,000		11-	9,011	8%	0%	(8,868)	-99%
	BRICK,STONE,MORTAR,ETC	5410								
	SAND,CLAY,GRVL,FILL DI	5415	8,000			8,000	8%	0%	(8,000)	-100%
	HORT./LANDSCAPING SPLY	5440								
	HAND TOOLS	5450	1,800	166		1,635	8%	0%	(1,800)	-100%
16	MINOR EQUIPMENT	5460	2,500	1,778	16	706	8%	1%	(2,308)	-92%
	HYDRANT PARTS	5480	1,000			1,000	8%	0%	(1,000)	-100%
	METER PARTS	5485	500			500	8%	0%	(500)	-100%
	VALVE PARTS	5490								
	PUMPING EQUIPMENT PART	5495								
	OTHER OPERATING MATL/S	5590	500			500	8%	0%	(500)	-100%
---			---	---	---	---	---	---	---	---
2,363	**OPERATING SUPPLIES**		**117,600**	**1,944**	**2,363**	**113,294**	**8%**	**2%**	**(89,244)**	**-76%**
	REPAIR & MAINTENANCE SP									
	BUILDING MATERIALS & S	5600								
	ELECTRICAL SUPPLIES	5605								
2,574	PLUMBING SUPPLIES	5610	45,000		2,574	42,426	8%	6%	(14,112)	-31%
	STRUCTURAL STEEL & IRO	5620								
	PAINT AND PAINTING SPL	5650	1,000			1,000	8%	0%	(1,000)	-100%
1,775	MTR VEHICLE REP. PTS/S	5700	18,000	1,451	1,775	14,774	8%	10%	3,300	18%
	COMMUNICATION REPAIR P	5750								
	EXPENDABLE WELDING SPL	5770								
	OTHER REPAIR/MAINT. SP	5990	1,000			1,000	8%	0%	(1,000)	-100%
---			---	---	---	---	---	---	---	---
4,349	**REPAIR & MAINTENANCE**		**65,000**	**1,451**	**4,349**	**59,200**	**8%**	**7%**	**(12,812)**	**-20%**
---			---	---	---	---	---	---	---	---
6,712	**SUPPLIES AND EXPENSES**		**182,600**	**3,395**	**6,712**	**172,494**	**8%**	**4%**	**(102,056)**	**-56%**
	PROFESSIONAL SERVICES									
	ENGINEERING	6015								
	ABSTRACTING & RECORDIN	6023								
	MEDICAL	6027								
	OTHER PROFESSIONAL SER	6049								
---			---	---	---	---	---	---	---	---
	PROFESSIONAL SERVICE									
	COMMUNICATIONS									

			CITY OF HATTIESBURG							
	009672 - W&S O&M-WATER TRANSMISSION DIV		EXPENDITURE REPORT							
			1 Months Ending 10/31/12							
THIS MONTH			ANNUAL	OPEN PO	YTD	REMAINING	PERCENT		....PROJECTED....	
ACTUAL		OBJ/SUB	BUDGET	& CONTRACTS	ACTUAL	BALANCE	PLAN	ACTUAL	OVER/UNDER	%
	POSTAGE	6070								
---			---	---	---	---	---	---	---	---
	COMMUNICATIONS									
	TRANSPORTATION									
	TRAVEL EXPENSE	6110								
	FREIGHT	6120								
---			---	---	---	---	---	---	---	---
	TRANSPORTATION									
	ADVERTISING									
	ADVERTISING	6150								
---			---	---	---	---	---	---	---	---
	ADVERTISING									
	PRINTING AND BINDING									
	PRINTING	6200								
---			---	---	---	---	---	---	---	---
	PRINTING AND BINDING									
	INSURANCE									
	PUBLIC LIAB/PROPERTY D	6255								
	AUTOMOBILE INSURANCE	6265								
---			---	---	---	---	---	---	---	---
	INSURANCE									
	REPR/MAINT-OUTSIDE LABO									
	BUILDING R&M	6350								
	ELECTRICAL R&M	6355								
	PLUMBING EQUIPMENT R&M	6357								
	STREETS & STRUCTURES R	6360	525,000			525,000	8%	0%	(525,000)	-100%
	FIXED EQUIPMENT R&M	6380								
	MINOR EQUIPMENT R&M	6382	1,000			1,000	8%	0%	(1,000)	-100%
274	MOTOR VEHICLE EQ. R&M	6384	10,000		274	9,726	8%	3%	(6,712)	-67%
	CONSTRUCTION EQUIP R&M	6386	8,000			8,000	8%	0%	(8,000)	-100%
	COMMUNICATION EQ. R&M	6390								
65	TOW IN CHARGES	6398	1,000		65	935	8%	7%	(220)	-22%
	OTHER REPAIRS AND MAIN	6399								
---			---	---	---	---	---	---	---	---
339	**REPR/MAINT-OUTSIDE L**		**545,000**		**339**	**544,661**	**8%**	**0%**	**(540,932)**	**-99%**
	RENTALS									
	MACHINERY RENT	6420	500			500	8%	0%	(500)	-100%

			CITY OF HATTIESBURG							
	009672 - W&S O&M-WATER TRANSMISSION DIV		EXPENDITURE REPORT							
			1 Months Ending 10/31/12							
THIS MONTH			ANNUAL	OPEN PO	YTD	REMAINING	PERCENT		....PROJECTED....	
ACTUAL		OBJ/SUB	BUDGET	& CONTRACTS	ACTUAL	BALANCE	PLAN	ACTUAL	OVER/UNDER	%
	CYLINDER RENT	6425								
108	UNIFORM RENT	6430	5,000		108	4,892	8%	2%	(3,704)	-74%
	OTHER RENT	6449								
---			---	---	---	---	---	---	---	---
108	**RENTALS**		**5,500**		**108**	**5,392**	**8%**	**2%**	**(4,204)**	**-76%**
	OTHER SERVICES & CHARGE									
	SETTLEMT OF DAMAGE CLA	6700								
	DUES AND MEMBERSHIPS	6840								
	REGISTRATION FEE/TUITI	6845								
	SERVICES NOT SPECIFIED	6999								
---			---	---	---	---	---	---	---	---
	OTHER SERVICES & CHA									
---			---	---	---	---	---	---	---	---
447	**OTHER SERVICES & CHAR**		**550,500**		**447**	**550,053**	**8%**	**0%**	**(545,136)**	**-99%**
	_____									
	LEASEHOLDS	7020								
	BUILDING/BLD IMPROVEMEN									
	BUILDING IMPROVEMENTS	7150								
---			---	---	---	---	---	---	---	---
	BUILDING/BLD IMPROVE									
	IMPROVEMENT OTHER THAN									
	OTHER IMPROVEMENTS	7295								
---			---	---	---	---	---	---	---	---
	IMPROVEMENT OTHER TH									
	MACHINERY AND EQUIPMENT									
	DATA PROCESSING EQUIP.	7327								
	CONSTRUCTION EQUIPMENT	7345								
	COMMUNICATION EQUIPMEN	7355								
	HYDRANTS & METERS	7365	40,000			40,000	8%	0%	(40,000)	-100%
	PIPE	7370								
	OTHER EQUIPMENT	7399								
---			---	---	---	---	---	---	---	---
	MACHINERY AND EQUIPM		**40,000**			**40,000**	**8%**	**0%**	**(40,000)**	**-100%**
	VEHICLES									
	AUTOMOBILES	7400								
	PICK UP TRUCKS	7420								
	SPECIAL TRUCKS	7450								

			CITY OF HATTIESBURG							
	009672 - W&S O&M-WATER TRANSMISSION DIV		EXPENDITURE REPORT							
			1 Months Ending 10/31/12							
THIS MONTH			ANNUAL	OPEN PO	YTD	REMAINING	PERCENT		....PROJECTED....	
ACTUAL		OBJ/SUB	BUDGET	& CONTRACTS	ACTUAL	BALANCE	PLAN	ACTUAL	OVER/UNDER	%
---			---	---	---	---	---	---	---	---
	VEHICLES									
---			---	---	---	---	---	---	---	---
	CAPITAL OUTLAY		**40,000**			**40,000**	**8%**	**0%**	**(40,000)**	**-100%**
---			---	---	---	---	---	---	---	---
51,592	**EXPENDITURES**		**1,670,633**	**3,395**	**51,592**	**1,615,647**	**8%**	**3%**	**(1,051,529)**	**-63%**

CITY OF HATTIESBURG
009673 - W&S O&M-WATER PLANT DIVISION
EXPENDITURE REPORT
1 Months Ending 10/31/12

THIS MONTH ACTUAL		OBJ/SUB	ANNUAL BUDGET	OPEN PO & CONTRACTS	YTD ACTUAL	REMAINING BALANCE	PERCENT PLAN	PERCENT ACTUAL	....PROJECTED.... OVER/UNDER	%
	SALARIES									
25,900	REGULAR WAGES	4000	360,781		25,900	334,881	8%	7%	(49,981)	-14%
	DISASTER RECOVERY WAGE	4010								
2,960	OVERTIME	4300	18,000		2,960	15,040	8%	16%	17,520	97%
	DISASTER RECOVERY OVER	4310								
28,860	**SALARIES**		**378,781**		**28,860**	**349,921**	**8%**	**8%**	**(32,461)**	**-9%**
	EMPLOYEE BENEFITS									
4,115	STATE RETIREMENT	4600	54,020		4,115	49,905	8%	8%	(4,640)	-9%
2,137	F.I.C.A. TAXES	4700	28,979		2,137	26,842	8%	7%	(3,335)	-12%
5,820	HOSPITALIZATION INS.	4800	83,520		5,820	77,700	8%	7%	(13,680)	-16%
	UNEMPLOYMENT BENEFITS	4900								
	WORKMAN'S COMPENSATION	4910	9,476			9,476	8%	0%	(9,476)	-100%
12,073	**EMPLOYEE BENEFITS**		**175,995**		**12,073**	**163,923**	**8%**	**7%**	**(31,119)**	**-18%**
40,932	**PERSONAL SERVICES**		**554,776**		**40,932**	**513,844**	**8%**	**7%**	**(63,592)**	**-11%**
	OFFICE SUPPLIES									
	PAPER	5003	300			300	8%	0%	(300)	-100%
	PRINTED FORMS	5005	3,000			3,000	8%	0%	(3,000)	-100%
(102)	OTHER EXPENDABLE OFF.S	5010	2,000		102-	2,102	8%	5%	(776)	-39%
	MINOR OFFICE EQUIP/FUR	5020	1,000			1,000	8%	0%	(1,000)	-100%
	SUBSCRIPTIONS,MAGS,MAP	5050								
	BOOKS	5070	200			200	8%	0%	(200)	-100%
	COMPUTER SUPPLIES	5080								
(102)	**OFFICE SUPPLIES**		**6,500**		**102-**	**6,602**	**8%**	**2%**	**(5,276)**	**-81%**
	OPERATING SUPPLIES									
47	CLEANING/JANITORIAL SP	5100	3,000	185	47	2,768	8%	2%	(2,436)	-81%
	FOOD	5115								
	MEDICAL SUPPLIES	5120								
2,716	CHEMICALS	5130	55,000		2,716	52,284	8%	5%	(22,408)	-41%
386	GAS AND OIL	5250	17,000		386	16,614	8%	2%	(12,368)	-73%
	LUBRICANTS	5255	500			500	8%	0%	(500)	-100%

CITY OF HATTIESBURG
009673 - W&S O&M-WATER PLANT DIVISION
EXPENDITURE REPORT
1 Months Ending 10/31/12

THIS MONTH ACTUAL		OBJ/SUB	ANNUAL BUDGET	OPEN PO & CONTRACTS	YTD ACTUAL	REMAINING BALANCE	PERCENT PLAN	PERCENT ACTUAL	....PROJECTED.... OVER/UNDER	%
155	DIESEL FUEL	5257	3,000		155	2,845	8%	5%	(1,140)	-38%
52	OTHER FUEL	5260	600		52	548	8%	9%	24	4%
	WEARING APPAREL	5355								
	CONCRETE, CEMENT, ETC.	5405								
	SAND,CLAY,GRVL,FILL DI	5415								
	DRAINAGE PIPE & CULVER	5420								
	HORT./LANDSCAPING SPLY	5440	450			450	8%	0%	(450)	-100%
(43)	HAND TOOLS	5450	500		43-	543	8%	9%	16	3%
	MINOR EQUIPMENT	5460	1,000			1,000	8%	0%	(1,000)	-100%
(13)	METER PARTS	5485			13-	13			156	
	VALVE PARTS	5490								
	PUMPING EQUIPMENT PART	5495	5,000			5,000	8%	0%	(5,000)	-100%
442	OTHER OPERATING MATL/S	5590	4,000		442	3,558	8%	11%	1,304	33%
---			---	---	---	---	---	---	---	---
3,743	**OPERATING SUPPLIES**		**90,050**	**185**	**3,743**	**86,122**	**8%**	**4%**	**(45,134)**	**-50%**
	REPAIR & MAINTENANCE SP									
	BUILDING MATERIALS & S	5600	1,700			1,700	8%	0%	(1,700)	-100%
	ELECTRICAL SUPPLIES	5605	12,000			12,000	8%	0%	(12,000)	-100%
319	PLUMBING SUPPLIES	5610	2,000		319	1,681	8%	16%	1,828	91%
	STRUCTURAL STEEL & IRO	5620								
773	PAINT AND PAINTING SPL	5650	800		773	27	8%	97%	8,476	60%
202	MTR VEHICLE REP. PTS/S	5700	3,200		202	2,998	8%	6%	(776)	-24%
	GENERATOR REP. PTS/SPL	5705	50,000			50,000	8%	0%	(50,000)	-100%
	COMMUNICATION REPAIR P	5750	1,000			1,000	8%	0%	(1,000)	-100%
	AGRICLTRL REPAIR PTS/S	5755								
	MINOR COMPUTER EQUIP.	5800								
	OTHER REPAIR/MAINT. SP	5990	1,200	412		788	8%	0%	(1,200)	-100%
---			---	---	---	---	---	---	---	---
1,294	**REPAIR & MAINTENANCE**		**71,900**	**412**	**1,294**	**70,194**	**8%**	**2%**	**(56,372)**	**-78%**
---			---	---	---	---	---	---	---	---
4,936	**SUPPLIES AND EXPENSES**		**168,450**	**597**	**4,936**	**162,917**	**8%**	**3%**	**(109,218)**	**-65%**
	_____									
	PROFESSIONAL SERVICES									
	ENGINEERING	6015								
	CONSULTANT SERV/SURVEY	6020								
3,199	OTHER PROFESSIONAL SER	6049	100,000		3,199	96,801	8%	3%	(61,612)	-62%
---			---	---	---	---	---	---	---	---

CITY OF HATTIESBURG
009673 - W&S O&M-WATER PLANT DIVISION
EXPENDITURE REPORT
1 Months Ending 10/31/12

THIS MONTH ACTUAL		OBJ/SUB	ANNUAL BUDGET	OPEN PO & CONTRACTS	YTD ACTUAL	REMAINING BALANCE	PERCENT PLAN	PERCENT ACTUAL	....PROJECTED.... OVER/UNDER	%
3,199	**PROFESSIONAL SERVICE**		**100,000**		**3,199**	**96,801**	**8%**	**3%**	**(61,612)**	**-62%**
	COMMUNICATIONS									
195	TELEPHONE AND TELEGRAP	6060	2,400		195	2,205	8%	8%	(60)	-3%
	POSTAGE	6070	10			10	8%	0%	(10)	-100%
---			---	---	---	---	---	---	---	---
195	**COMMUNICATIONS**		**2,410**		**195**	**2,215**	**8%**	**8%**	**(70)**	**-3%**
	TRANSPORTATION									
	TRAVEL EXPENSE	6110	3,000			3,000	8%	0%	(3,000)	-100%
	FREIGHT	6120								
	MESSENGER/EXPRESS SERV	6130								
---			---	---	---	---	---	---	---	---
	TRANSPORTATION		**3,000**			**3,000**	**8%**	**0%**	**(3,000)**	**-100%**
	ADVERTISING									
	ADVERTISING	6150								
---			---	---	---	---	---	---	---	---
	ADVERTISING									
	PRINTING AND BINDING									
	PRINTING	6200								
---			---	---	---	---	---	---	---	---
	PRINTING AND BINDING									
	INSURANCE									
	BOILER MACHINERY	6260								
	SURETY AND FORGERY BON	6270								
---			---	---	---	---	---	---	---	---
	INSURANCE									
	UTILITIES									
107	GAS	6300	10,000		107	9,893	8%	1%	(8,716)	-87%
53,189	ELECTRICITY	6305	625,000		53,189	571,811	8%	9%	13,268	2%
---			---	---	---	---	---	---	---	---
53,296	**UTILITIES**		**635,000**		**53,296**	**581,704**	**8%**	**8%**	**4,552**	**1%**
	REPR/MAINT-OUTSIDE LABO									
	BUILDING R&M	6350	1,000			1,000	8%	0%	(1,000)	-100%
2,141	ELECTRICAL R&M	6355	20,000		2,141	17,859	8%	11%	5,692	28%
	PLUMBING EQUIPMENT R&M	6357								
152	OFFICE EQUIPMENT R&M	6365	1,000		152	848	8%	15%	824	82%
42,604	FIXED EQUIPMENT R&M	6380	29,500	2,250	42,604	(15,354)	8%	144%	481,748	633%
	MINOR EQUIPMENT R&M	6382	1,000			1,000	8%	0%	(1,000)	-100%

			CITY OF HATTIESBURG							
	009673 - W&S O&M-WATER PLANT DIVISION		EXPENDITURE REPORT							
			1 Months Ending 10/31/12							
THIS MONTH			ANNUAL	OPEN PO	YTD	REMAINING	PERCENT		....PROJECTED....	
ACTUAL		OBJ/SUB	BUDGET	& CONTRACTS	ACTUAL	BALANCE	PLAN	ACTUAL	OVER/UNDER	%
5,885	GENERATOR R&M	6383	135,000		5,885	129,115	8%	4%	(64,380)	-48%
	MOTOR VEHICLE EQ. R&M	6384	2,000			2,000	8%	0%	(2,000)	-100%
	CONSTRUCTION EQUIP R&M	6386								
	AGRICULTURAL EQ. R&M	6387								
	COMMUNICATION EQ. R&M	6390	1,000			1,000	8%	0%	(1,000)	-100%
	DISINFECT./EXTERMINATI	6394	1,500			1,500	8%	0%	(1,500)	-100%
	OTHER REPAIRS AND MAIN	6399	600			600	8%	0%	(600)	-100%
---			---	---	---	---	---	---	---	---
50,783	**REPR/MAINT-OUTSIDE L**		**192,600**	**2,250**	**50,783**	**139,567**	**8%**	**26%**	**416,796**	**216%**
	RENTALS									
	OFFICE EQUIPMENT RENT	6410								
	MACHINERY RENT	6420								
	CYLINDER RENT	6425								
193	UNIFORM RENT	6430	3,500		193	3,307	8%	6%	(1,184)	-34%
76	MOP-MAT-RAG RENT	6435	1,000		76	924	8%	8%	(88)	-9%
	OTHER RENT	6449								
---			---	---	---	---	---	---	---	---
268	**RENTALS**		**4,500**		**268**	**4,232**	**8%**	**6%**	**(1,284)**	**-29%**
	OTHER SERVICES & CHARGE									
	BANK SERV/TRF FEE	6832								
	DUES AND MEMBERSHIPS	6840	1,000			1,000	8%	0%	(1,000)	-100%
	REGISTRATION FEE/TUITI	6845	1,000			1,000	8%	0%	(1,000)	-100%
	CUSTODIAL SERVICE	6870								
	PROPERTY TAXES	6995								
	SERVICES NOT SPECIFIED	6999	2,000			2,000	8%	0%	(2,000)	-100%
---			---	---	---	---	---	---	---	---
	OTHER SERVICES & CHA		**4,000**			**4,000**	**8%**	**0%**	**(4,000)**	**-100%**
---			---	---	---	---	---	---	---	---
107,741	**OTHER SERVICES & CHAR**		**941,510**	**2,250**	**107,741**	**831,519**	**8%**	**11%**	**351,382**	**37%**
	_____									
	BUILDING/BLD IMPROVEMEN									
	BUILDING IMPROVEMENTS	7150								
	W&S WAREHOUSE IMPROVE	7150 11								
	WATER PLANT RENOVATIO	7150 17								
	ELEVATOR	7150 24								
---			---	---	---	---	---	---	---	---
	BUILDING IMPROVEMEN									

CITY OF HATTIESBURG
009673 - W&S O&M-WATER PLANT DIVISION
EXPENDITURE REPORT
1 Months Ending 10/31/12

THIS MONTH ACTUAL		OBJ/SUB	ANNUAL BUDGET	OPEN PO & CONTRACTS	YTD ACTUAL	REMAINING BALANCE	PERCENT PLAN	PERCENT ACTUAL	....PROJECTED.... OVER/UNDER	%
	BUILDING/BLD IMPROVE									
	IMPROVEMENT OTHER THAN									
	FENCES/RAILINGS	7212	1,000			1,000	8%	0%	(1,000)	-100%
	LANDSCAPING	7250								
	OTHER IMPROVEMENTS	7295								
	IMPROVEMENT OTHER TH		**1,000**			**1,000**	**8%**	**0%**	**(1,000)**	**-100%**
	MACHINERY AND EQUIPMENT									
	OFFICE FURN/EQUIP.	7325								
	DATA PROCESSING EQUIP.	7327	4,000			4,000	8%	0%	(4,000)	-100%
	WATER UTILITY SOFTWARE	7329	7,500			7,500	8%	0%	(7,500)	-100%
	AGRICULTURAL EQUIPMENT	7335								
3,995	PLANT EQUIPMENT	7340	4,000		3,995	5	8%	100%	43,940	99%
	COMMUNICATION EQUIPMEN	7355	3,000			3,000	8%	0%	(3,000)	-100%
	HYDRANTS & METERS	7365								
	OTHER EQUIPMENT	7399								
3,995	**MACHINERY AND EQUIPM**		**18,500**		**3,995**	**14,505**	**8%**	**22%**	**29,440**	**159%**
	VEHICLES									
	AUTOMOBILES	7400								
	PICK UP TRUCKS	7420								
	VEHICLES									
3,995	**CAPITAL OUTLAY**		**19,500**		**3,995**	**15,505**	**8%**	**20%**	**28,440**	**146%**
157,604	**EXPENDITURES**		**1,684,236**	**2,847**	**157,604**	**1,523,785**	**8%**	**9%**	**207,012**	**12%**

CITY OF HATTIESBURG
009676 - W&S O&M-SEWER DIVISION
EXPENDITURE REPORT
1 Months Ending 10/31/12

THIS MONTH ACTUAL		OBJ/SUB	ANNUAL BUDGET	OPEN PO & CONTRACTS	YTD ACTUAL	REMAINING BALANCE	PERCENT PLAN	PERCENT ACTUAL	....PROJECTED.... OVER/UNDER	%
	SALARIES									
25,496	REGULAR WAGES	4000	421,906		25,496	396,410	8%	6%	(115,954)	-27%
	DISASTER RECOVERY WAGE	4010								
3,433	OVERTIME	4300	35,000		3,433	31,567	8%	10%	6,196	18%
	DISASTER RECOVERY OVER	4310								
---			---	---	---	---	---	---	---	---
28,929	**SALARIES**		**456,906**		**28,929**	**427,977**	**8%**	**6%**	**(109,758)**	**-24%**
	EMPLOYEE BENEFITS									
4,125	STATE RETIREMENT	4600	65,160		4,125	61,035	8%	6%	(15,660)	-24%
2,196	F.I.C.A. TAXES	4700	34,960		2,196	32,764	8%	6%	(8,608)	-25%
5,820	HOSPITALIZATION INS.	4800	104,400		5,820	98,580	8%	6%	(34,560)	-33%
	UNEMPLOYMENT BENEFITS	4900	2,700			2,700	8%	0%	(2,700)	-100%
	WORKMAN'S COMPENSATION	4910	22,580			22,580	8%	0%	(22,580)	-100%
---			---	---	---	---	---	---	---	---
12,141	**EMPLOYEE BENEFITS**		**229,800**		**12,141**	**217,659**	**8%**	**5%**	**(84,108)**	**-37%**
---			---	---	---	---	---	---	---	---
41,070	**PERSONAL SERVICES**		**686,706**		**41,070**	**645,636**	**8%**	**6%**	**(193,866)**	**-28%**
	OPERATING SUPPLIES									
	CLEANING/JANITORIAL SP	5100								
	HOUSEHOLD SUPPLIES	5110								
	MEDICAL SUPPLIES	5120								
1,955	CHEMICALS	5130	125,000		1,955	123,045	8%	2%	(101,540)	-81%
404	GAS AND OIL	5250	30,000		404	29,596	8%	1%	(25,152)	-84%
	LUBRICANTS	5255								
827	DIESEL FUEL	5257	25,500		827	24,673	8%	3%	(15,576)	-61%
	OTHER FUEL	5260								
	WEARING APPAREL	5355	4,000			4,000	8%	0%	(4,000)	-100%
	ASPHALT & ASPHALT PROD	5400								
	CONCRETE, CEMENT, ETC.	5405	10,000			10,000	8%	0%	(10,000)	-100%
	BRICK,STONE,MORTAR,ETC	5410	900			900	8%	0%	(900)	-100%
	SAND,CLAY,GRVL,FILL DI	5415	8,000			8,000	8%	0%	(8,000)	-100%
	DRAINAGE PIPE & CULVER	5420								
80	HORT./LANDSCAPING SPLY	5440	300		80	220	8%	27%	660	220%
	HAND TOOLS	5450	300			300	8%	0%	(300)	-100%

CITY OF HATTIESBURG
009676 - W&S O&M-SEWER DIVISION
EXPENDITURE REPORT
1 Months Ending 10/31/12

THIS MONTH ACTUAL		OBJ/SUB	ANNUAL BUDGET	OPEN PO & CONTRACTS	YTD ACTUAL	REMAINING BALANCE	PERCENT PLAN	PERCENT ACTUAL	....PROJECTED.... OVER/UNDER	%
828	MINOR EQUIPMENT	5460	1,000		828	172	8%	83%	8,936	894%
	PUMPING EQUIPMENT PART	5495	500			500	8%	0%	(500)	-100%
	OTHER OPERATING MATL/S	5590	1,000			1,000	8%	0%	(1,000)	-100%
4,094	**OPERATING SUPPLIES**		**206,500**		**4,094**	**202,406**	**8%**	**2%**	**(157,372)**	**-76%**
	REPAIR & MAINTENANCE SP									
	BUILDING MATERIALS & S	5600	2,500			2,500	8%	0%	(2,500)	-100%
	ELECTRICAL SUPPLIES	5605	5,000			5,000	8%	0%	(5,000)	-100%
4,277	PLUMBING SUPPLIES	5610	25,000		4,277	20,723	8%	17%	26,324	105%
	STRUCTURAL STEEL & IRO	5620								
996	PAINT AND PAINTING SPL	5650			996	(996)			11,952	
257	MTR VEHICLE REP. PTS/S	5700	20,000	1,565	257	18,178	8%	1%	(16,916)	-85%
	COMMUNICATION REPAIR P	5750								
	AGRICLTRL REPAIR PTS/S	5755								
	EXPENDABLE WELDING SPL	5770								
	OTHER REPAIR/MAINT. SP	5990	500			500	8%	0%	(500)	-100%
5,530	**REPAIR & MAINTENANCE**		**53,000**	**1,565**	**5,530**	**45,905**	**8%**	**10%**	**13,360**	**25%**
9,624	**SUPPLIES AND EXPENSES**		**259,500**	**1,565**	**9,624**	**248,311**	**8%**	**4%**	**(144,012)**	**-55%**
	PROFESSIONAL SERVICES									
	LEGAL	6025								
	OTHER PROFESSIONAL SER	6049	2,000			2,000	8%	0%	(2,000)	-100%
	PROFESSIONAL SERVICE		**2,000**			**2,000**	**8%**	**0%**	**(2,000)**	**-100%**
	COMMUNICATIONS									
	TELEPHONE AND TELEGRAP	6060								
	POSTAGE	6070								
	COMMUNICATIONS									
	TRANSPORTATION									
	TRAVEL EXPENSE	6110								
	FREIGHT	6120								
	TRANSPORTATION									
	ADVERTISING									

			CITY OF HATTIESBURG							
	009676 - W&S O&M-SEWER DIVISION		EXPENDITURE REPORT							
			1 Months Ending 10/31/12							
THIS MONTH			ANNUAL	OPEN PO	YTD	REMAINING	PERCENT		....PROJECTED....	
ACTUAL		OBJ/SUB	BUDGET	& CONTRACTS	ACTUAL	BALANCE	PLAN	ACTUAL	OVER/UNDER	%
	ADVERTISING	6150								
---			---	---	---	---	---	---	---	---
	ADVERTISING									
	INSURANCE									
	PUBLIC LIAB/PROPERTY D	6255								
	BOILER MACHINERY	6260								
	AUTOMOBILE INSURANCE	6265								
---			---	---	---	---	---	---	---	---
	INSURANCE									
	UTILITIES									
13	GAS	6300	300		13	287	8%	4%	(144)	-48%
6,471	ELECTRICITY	6305	80,000		6,471	73,529	8%	8%	(2,348)	-3%
---			---	---	---	---	---	---	---	---
6,484	**UTILITIES**		**80,300**		**6,484**	**73,816**	**8%**	**8%**	**(2,492)**	**-3%**
	REPR/MAINT-OUTSIDE LABO									
	ELECTRICAL R&M	6355	7,500			7,500	8%	0%	(7,500)	-100%
	PLUMBING EQUIPMENT R&M	6357								
	STREETS & STRUCTURES R	6360	806,150			806,150	8%	0%	(806,150)	-100%
	FIXED EQUIPMENT R&M	6380								
	MINOR EQUIPMENT R&M	6382	2,000			2,000	8%	0%	(2,000)	-100%
1,196	MOTOR VEHICLE EQ. R&M	6384	30,000	3,565	1,196	25,239	8%	4%	(15,648)	-52%
719	CONSTRUCTION EQUIP R&M	6386	3,000		719	2,281	8%	24%	5,628	188%
	AGRICULTURAL EQ. R&M	6387								
	COMMUNICATION EQ. R&M	6390	500			500	8%	0%	(500)	-100%
	TOW IN CHARGES	6398	1,000			1,000	8%	0%	(1,000)	-100%
	OTHER REPAIRS AND MAIN	6399								
---			---	---	---	---	---	---	---	---
1,915	**REPR/MAINT-OUTSIDE L**		**850,150**	**3,565**	**1,915**	**844,670**	**8%**	**0%**	**(827,170)**	**-97%**
	RENTALS									
	AUTOMOTIVE EQ. RENT	6415								
	MACHINERY RENT	6420	1,500			1,500	8%	0%	(1,500)	-100%
	CYLINDER RENT	6425	300			300	8%	0%	(300)	-100%
209	UNIFORM RENT	6430	3,000		209	2,791	8%	7%	(492)	-16%
	OTHER RENT	6449								
---			---	---	---	---	---	---	---	---
209	**RENTALS**		**4,800**		**209**	**4,591**	**8%**	**4%**	**(2,292)**	**-48%**
	OTHER SERVICES & CHARGE									

			CITY OF HATTIESBURG							
	009676 - W&S O&M-SEWER DIVISION		EXPENDITURE REPORT							
			1 Months Ending 10/31/12							
THIS MONTH			ANNUAL	OPEN PO	YTD	REMAINING	PERCENT		....PROJECTED....	
ACTUAL		OBJ/SUB	BUDGET	& CONTRACTS	ACTUAL	BALANCE	PLAN	ACTUAL	OVER/UNDER	%
	REGISTRATION FEE/TUITI	6845								
	SERVICES NOT SPECIFIED	6999								
---			---	---	---	---	---	---	---	---
	OTHER SERVICES & CHA									
---			---	---	---	---	---	---	---	---
8,608	**OTHER SERVICES & CHAR**		**937,250**	**3,565**	**8,608**	**925,077**	**8%**	**1%**	**(833,954)**	**-89%**
	BUILDING/BLD IMPROVEMEN									
	BUILDINGS	7100								
	SEWER MAINT. BLDG.	7100 09								
---			---	---	---	---	---	---	---	---
	BUILDINGS									
---			---	---	---	---	---	---	---	---
	BUILDING/BLD IMPROVE									
	IMPROVEMENT OTHER THAN									
	BRIDGES	7210								
	FENCES/RAILINGS	7212	3,000			3,000	8%	0%	(3,000)	-100%
	DRAINS	7215								
	SEWERS	7220								
	STREETS & ROADWAYS	7230								
---			---	---	---	---	---	---	---	---
	IMPROVEMENT OTHER TH		**3,000**			**3,000**	**8%**	**0%**	**(3,000)**	**-100%**
	MACHINERY AND EQUIPMENT									
	ENGINEERING	7305								
	DATA PROCESSING EQUIP.	7327								
	AGRICULTURAL EQUIPMENT	7335								
	PLANT EQUIPMENT	7340								
	CONSTRUCTION EQUIPMENT	7345								
	COMMUNICATION EQUIPMEN	7355								
	PIPE	7370								
	OTHER EQUIPMENT	7399								
---			---	---	---	---	---	---	---	---
	MACHINERY AND EQUIPM									
	VEHICLES									
	AUTOMOBILES	7400								
	PICK UP TRUCKS	7420								
	DUMP TRUCKS	7440								

			CITY OF HATTIESBURG							
	009676 - W&S O&M-SEWER DIVISION		EXPENDITURE REPORT							
			1 Months Ending 10/31/12							
THIS MONTH			ANNUAL	OPEN PO	YTD	REMAINING	PERCENT		....PROJECTED....	
ACTUAL		OBJ/SUB	BUDGET	& CONTRACTS	ACTUAL	BALANCE	PLAN	ACTUAL	OVER/UNDER	%
	SPECIAL TRUCKS	7450		304,840		(304,840)				
---			---	---	---	---	---	---	---	---
	VEHICLES			**304,840**		**(304,840)**				
---			---	---	---	---	---	---	---	---
	CAPITAL OUTLAY		**3,000**	**304,840**		**(301,840)**	**8%**	**0%**	**(3,000)**	**-100%**
---			---	---	---	---	---	---	---	---
59,302	**EXPENDITURES**		**1,886,456**	**309,970**	**59,302**	**1,517,184**	**8%**	**3%**	**(1,174,832)**	**-62%**

CITY OF HATTIESBURG
009677 - W&S O&M-SEWER LAGOON DIV.
EXPENDITURE REPORT
1 Months Ending 10/31/12

THIS MONTH ACTUAL		OBJ/SUB	ANNUAL BUDGET	OPEN PO & CONTRACTS	YTD ACTUAL	REMAINING BALANCE	PERCENT PLAN	PERCENT ACTUAL	....PROJECTED.... OVER/UNDER	%
	SALARIES									
8,670	REGULAR WAGES	4000	155,906		8,670	147,236	8%	6%	(51,866)	-33%
	DISASTER RECOVERY WAGE	4010								
2,750	OVERTIME	4300	20,000		2,750	17,250	8%	14%	13,000	65%
	DISASTER RECOVERY OVER	4310								
11,420	**SALARIES**		**175,906**		**11,420**	**164,486**	**8%**	**6%**	**(38,866)**	**-22%**
	EMPLOYEE BENEFITS									
1,628	STATE RETIREMENT	4600	25,090		1,628	23,462	8%	6%	(5,554)	-22%
838	F.I.C.A. TAXES	4700	13,460		838	12,622	8%	6%	(3,404)	-25%
1,940	HOSPITALIZATION INS.	4800	36,540		1,940	34,600	8%	5%	(13,260)	-36%
	UNEMPLOYMENT BENEFITS	4900	1,000			1,000	8%	0%	(1,000)	-100%
	WORKMAN'S COMPENSATION	4910	6,489			6,489	8%	0%	(6,489)	-100%
4,407	**EMPLOYEE BENEFITS**		**82,579**		**4,407**	**78,172**	**8%**	**5%**	**(29,695)**	**-36%**
15,826	**PERSONAL SERVICES**		**258,485**		**15,826**	**242,659**	**8%**	**6%**	**(68,573)**	**-27%**
	OFFICE SUPPLIES									
	OPERATING SUPPLIES									
	CLEANING/JANITORIAL SP	5100								
	MEDICAL SUPPLIES	5120	900			900	8%	0%	(900)	-100%
23,649	CHEMICALS	5130	153,000		23,649	129,351	8%	15%	130,788	85%
678	GAS AND OIL	5250	38,000		678	37,322	8%	2%	(29,864)	-79%
	LUBRICANTS	5255	7,800			7,800	8%	0%	(7,800)	-100%
292	DIESEL FUEL	5257	1,000		292	708	8%	29%	2,504	250%
	OTHER FUEL	5260	1,000			1,000	8%	0%	(1,000)	-100%
36	WEARING APPAREL	5355	100	30	36	34	8%	36%	332	332%
	CONCRETE, CEMENT, ETC.	5405								
	SAND,CLAY,GRVL,FILL DI	5415								
103	HAND TOOLS	5450	500		103	397	8%	21%	736	147%
	MINOR EQUIPMENT	5460	1,000			1,000	8%	0%	(1,000)	-100%
	METER PARTS	5485	3,000			3,000	8%	0%	(3,000)	-100%
	VALVE PARTS	5490								
100	PUMPING EQUIPMENT PART	5495	142,000	3,406	100	138,494	8%	0%	(140,800)	-99%

CITY OF HATTIESBURG
009677 - W&S O&M-SEWER LAGOON DIV.
EXPENDITURE REPORT
1 Months Ending 10/31/12

THIS MONTH ACTUAL		OBJ/SUB	ANNUAL BUDGET	OPEN PO & CONTRACTS	YTD ACTUAL	REMAINING BALANCE	PERCENT PLAN	PERCENT ACTUAL	....PROJECTED.... OVER/UNDER	%
	OTHER OPERATING MATL/S	5590	5,000	22		4,978	8%	0%	(5,000)	-100%
---			---	---	---	---	---	---	---	---
24,857	**OPERATING SUPPLIES**		**353,300**	**3,458**	**24,857**	**324,985**	**8%**	**7%**	**(55,016)**	**-16%**
	REPAIR & MAINTENANCE SP									
	BUILDING MATERIALS & S	5600								
185	ELECTRICAL SUPPLIES	5605	20,000		185	19,815	8%	1%	(17,780)	-89%
17	PLUMBING SUPPLIES	5610	500		17	483	8%	3%	(296)	-59%
	STRUCTURAL STEEL & IRO	5620								
	PAINT AND PAINTING SPL	5650								
524	MTR VEHICLE REP. PTS/S	5700	3,000		524	2,476	8%	17%	3,288	110%
	COMMUNICATION REPAIR P	5750								
	EXPENDABLE WELDING SPL	5770								
	OTHER REPAIR/MAINT. SP	5990								
---			---	---	---	---	---	---	---	---
725	**REPAIR & MAINTENANCE**		**23,500**		**725**	**22,775**	**8%**	**3%**	**(14,800)**	**-63%**
---			---	---	---	---	---	---	---	---
25,583	**SUPPLIES AND EXPENSES**		**376,800**	**3,458**	**25,583**	**347,760**	**8%**	**7%**	**(69,804)**	**-19%**
	_____									
	PROFESSIONAL SERVICES									
	CONSULTANT SERV/SURVEY	6020	80,000			80,000	8%	0%	(80,000)	-100%
14,792	LEGAL	6025	350,000		14,792	335,208	8%	4%	(172,496)	-49%
	MEDICAL	6027								
13,051	OTHER PROFESSIONAL SER	6049	150,000	3,200	13,051	133,749	8%	9%	6,612	4%
---			---	---	---	---	---	---	---	---
27,843	**PROFESSIONAL SERVICE**		**580,000**	**3,200**	**27,843**	**548,957**	**8%**	**5%**	**(245,884)**	**-42%**
	TRANSPORTATION									
	TRAVEL EXPENSE	6110	2,500			2,500	8%	0%	(2,500)	-100%
	FREIGHT	6120								
	MESSENGER/EXPRESS SERV	6130								
---			---	---	---	---	---	---	---	---
	TRANSPORTATION		**2,500**			**2,500**	**8%**	**0%**	**(2,500)**	**-100%**
	ADVERTISING									
	ADVERTISING	6150								
---			---	---	---	---	---	---	---	---
	ADVERTISING									
	INSURANCE									
	PUBLIC LIAB/PROPERTY D	6255								

CITY OF HATTIESBURG
009677 - W&S O&M-SEWER LAGOON DIV.
EXPENDITURE REPORT
1 Months Ending 10/31/12

THIS MONTH ACTUAL		OBJ/SUB	ANNUAL BUDGET	OPEN PO & CONTRACTS	YTD ACTUAL	REMAINING BALANCE	PERCENT PLAN	PERCENT ACTUAL	....PROJECTED.... OVER/UNDER	%
	AUTOMOBILE INSURANCE	6265								
---			---	---	---	---	---	---	---	---
	INSURANCE									
	UTILITIES									
52,989	ELECTRICITY	6305	1,008,500		52,989	955,511	8%	5%	(372,632)	-37%
	INTERFUND ENERGY REIMB	6307								
---			---	---	---	---	---	---	---	---
52,989	**UTILITIES**		**1,008,500**		**52,989**	**955,511**	**8%**	**5%**	**(372,632)**	**-37%**
	REPR/MAINT-OUTSIDE LABO									
	BUILDING R&M	6350								
	ELECTRICAL R&M	6355	15,000			15,000	8%	0%	(15,000)	-100%
3,781	FIXED EQUIPMENT R&M	6380	100,000	6,275	3,781	89,944	8%	4%	(54,628)	-55%
	MINOR EQUIPMENT R&M	6382								
442	MOTOR VEHICLE EQ. R&M	6384	4,000		442	3,558	8%	11%	1,304	33%
	CONSTRUCTION EQUIP R&M	6386	300			300	8%	0%	(300)	-100%
	COMMUNICATION EQ. R&M	6390								
	DISINFECT./EXTERMINATI	6394	500			500	8%	0%	(500)	-100%
	TOW IN CHARGES	6398	500			500	8%	0%	(500)	-100%
	OTHER REPAIRS AND MAIN	6399								
---			---	---	---	---	---	---	---	---
4,223	**REPR/MAINT-OUTSIDE L**		**120,300**	**6,275**	**4,223**	**109,802**	**8%**	**4%**	**(69,624)**	**-58%**
	RENTALS									
	MACHINERY RENT	6420								
90	UNIFORM RENT	6430	1,100		90	1,010	8%	8%	(20)	-2%
---			---	---	---	---	---	---	---	---
90	**RENTALS**		**1,100**		**90**	**1,010**	**8%**	**8%**	**(20)**	**-2%**
	OTHER SERVICES & CHARGE									
	DUES AND MEMBERSHIPS	6840								
	REGISTRATION FEE/TUITI	6845								
1,649	SERVICES NOT SPECIFIED	6999	10,000		1,649	8,351	8%	16%	9,788	98%
---			---	---	---	---	---	---	---	---
1,649	**OTHER SERVICES & CHA**		**10,000**		**1,649**	**8,351**	**8%**	**16%**	**9,788**	**98%**
---			---	---	---	---	---	---	---	---
86,795	**OTHER SERVICES & CHAR**		**1,722,400**	**9,475**	**86,795**	**1,626,130**	**8%**	**5%**	**(680,860)**	**-40%**
	_____									
	IMPROVEMENT OTHER THAN									
	SEWERS	7220								

CITY OF HATTIESBURG
009677 - W&S O&M-SEWER LAGOON DIV.
EXPENDITURE REPORT
1 Months Ending 10/31/12

THIS MONTH ACTUAL		OBJ/SUB	ANNUAL BUDGET	OPEN PO & CONTRACTS	YTD ACTUAL	REMAINING BALANCE	PERCENT PLAN	PERCENT ACTUAL	....PROJECTED.... OVER/UNDER	%
	CDBG-WIS PAK	7220 46								
	SEWERS									
	STREETS & ROADWAYS	7230								
	OTHER IMPROVEMENTS	7295								
	BONHOMIE RD PUMPING S	7295 47								
	OTHER IMPROVEMENTS									
	IMPROVEMENT OTHER TH									
	MACHINERY AND EQUIPMENT									
	OFFICE FURN/EQUIP.	7325								
	DATA PROCESSING EQUIP.	7327	60,000			60,000	8%	0%	(60,000)	-100%
	AGRICULTURAL EQUIPMENT	7335								
	COMMUNICATION EQUIPMEN	7355								
	OTHER EQUIPMENT	7399								
	MACHINERY AND EQUIPM		**60,000**			**60,000**	**8%**	**0%**	**(60,000)**	**-100%**
	VEHICLES									
	AUTOMOBILES	7400								
	SPECIAL TRUCKS	7450								
	VEHICLES									
	CAPITAL OUTLAY		**60,000**			**60,000**	**8%**	**0%**	**(60,000)**	**-100%**
	CAPITAL LEASE PAYMENTS									
	ENERGY IMPR LEASE	8517								
	CAPITAL LEASE PAYMEN									
	INTEREST ON CAPITAL LEA									
	ENERGY IMPR LEASE	8617								
	INTEREST ON CAPITAL									
	DEBT SERVICE									

			CITY OF HATTIESBURG							
	009677 - W&S O&M-SEWER LAGOON DIV.		EXPENDITURE REPORT							
			1 Months Ending 10/31/12							
THIS MONTH			ANNUAL	OPEN PO	YTD	REMAINING	PERCENT		....PROJECTED....	
ACTUAL		OBJ/SUB	BUDGET	& CONTRACTS	ACTUAL	BALANCE	PLAN	ACTUAL	OVER/UNDER	%
128,204	**EXPENDITURES**		**2,417,685**	**12,933**	**128,204**	**2,276,548**	**8%**	**5%**	**(879,237)**	**-36%**

			CITY OF HATTIESBURG							
	010451 - W&S B&I-REVENUE OBLIGATIONS		EXPENDITURE REPORT							
			1 Months Ending 10/31/12							
THIS MONTH			ANNUAL	OPEN PO	YTD	REMAINING	PERCENT		....PROJECTED....	
ACTUAL		OBJ/SUB	BUDGET	& CONTRACTS	ACTUAL	BALANCE	PLAN	ACTUAL	OVER/UNDER	%
	BONDS REDEEMED									
	GENERAL ISSUES	8000	535,000			535,000	8%	0%	(535,000)	-100%
	REVENUE ISSUES	8010	1,535,000			1,535,000	8%	0%	(1,535,000)	-100%
---			---	---	---	---	---	---	---	---
	BONDS REDEEMED		**2,070,000**			**2,070,000**	**8%**	**0%**	**(2,070,000)**	**-100%**
	INTEREST ON BONDS									
	GENERAL ISSUES	8100	312,900			312,900	8%	0%	(312,900)	-100%
179,025	REVENUE ISSUES	8110	927,425		179,025	748,400	8%	19%	1,220,875	132%
---			---	---	---	---	---	---	---	---
179,025	**INTEREST ON BONDS**		**1,240,325**		**179,025**	**1,061,300**	**8%**	**14%**	**907,975**	**73%**
	PAYING AGENT FEES									
	GENERAL ISSUES	8400	2,500			2,500	8%	0%	(2,500)	-100%
	REVENUE ISSUES	8410								
---			---	---	---	---	---	---	---	---
	PAYING AGENT FEES		**2,500**			**2,500**	**8%**	**0%**	**(2,500)**	**-100%**
---			---	---	---	---	---	---	---	---
179,025	**DEBT SERVICE**		**3,312,825**		**179,025**	**3,133,800**	**8%**	**5%**	**(1,164,525)**	**-35%**
---			---	---	---	---	---	---	---	---
179,025	**EXPENDITURES**		**3,312,825**		**179,025**	**3,133,800**	**8%**	**5%**	**(1,164,525)**	**-35%**

			CITY OF HATTIESBURG							
	010500 - W&S B&I-TRANSFERS		EXPENDITURE REPORT							
			1 Months Ending 10/31/12							
THIS MONTH			ANNUAL	OPEN PO	YTD	REMAINING	PERCENT		....PROJECTED....	
ACTUAL		OBJ/SUB	BUDGET	& CONTRACTS	ACTUAL	BALANCE	PLAN	ACTUAL	OVER/UNDER	%
	_____									
	_____									
	TRANSFERS TO OTHER FUND									
	T/T W & S RFDG.BONDS	9000 65								
	T/T W & S CONSTRUCTION	9000 75								
---			---	---	---	---	---	---	---	---
	TRANSFERS TO OTHER F									
---			---	---	---	---	---	---	---	---
	TRANSFERS									
---			---	---	---	---	---	---	---	---
	EXPENDITURES									

CITY OF HATTIESBURG
011451 - WATER & SEWER-REV.OBLIGATN
EXPENDITURE REPORT
1 Months Ending 10/31/12

THIS MONTH ACTUAL		OBJ/SUB	ANNUAL BUDGET	OPEN PO & CONTRACTS	YTD ACTUAL	REMAINING BALANCE	PERCENT PLAN	PERCENT ACTUAL	....PROJECTED.... OVER/UNDER	%
	NOTE PRINCIPAL									
29,289	SRF NOTE	8222	358,810		29,289	329,521	8%	8%	(7,342)	-2%
---			---	---	---	---	---	---	---	---
29,289	**NOTE PRINCIPAL**		**358,810**		**29,289**	**329,521**	**8%**	**8%**	**(7,342)**	**-2%**
	INTEREST ON NOTES									
6,816	SRF NOTE	8332	74,460		6,816	67,644	8%	9%	7,332	10%
---			---	---	---	---	---	---	---	---
6,816	**INTEREST ON NOTES**		**74,460**		**6,816**	**67,644**	**8%**	**9%**	**7,332**	**10%**
	CAPITAL LEASE PAYMENTS									
	2012 EQUIP LEASE	8514	104,400			104,400	8%	0%	(104,400)	-100%
---			---	---	---	---	---	---	---	---
	CAPITAL LEASE PAYMEN		**104,400**			**104,400**	**8%**	**0%**	**(104,400)**	**-100%**
	INTEREST ON CAPITAL LEA									
	2012 EQUIP LEASE	8614	7,200			7,200	8%	0%	(7,200)	-100%
---			---	---	---	---	---	---	---	---
	INTEREST ON CAPITAL		**7,200**			**7,200**	**8%**	**0%**	**(7,200)**	**-100%**
---			---	---	---	---	---	---	---	---
36,105	**DEBT SERVICE**		**544,870**		**36,105**	**508,765**	**8%**	**7%**	**(111,610)**	**-20%**
---			---	---	---	---	---	---	---	---
36,105	**EXPENDITURES**		**544,870**		**36,105**	**508,765**	**8%**	**7%**	**(111,610)**	**-20%**

			CITY OF HATTIESBURG							
	011500 - WATER & SEWER-TRANSFERS		EXPENDITURE REPORT							
			1 Months Ending 10/31/12							
THIS MONTH			ANNUAL	OPEN PO	YTD	REMAINING	PERCENT		....PROJECTED....	
ACTUAL		OBJ/SUB	BUDGET	& CONTRACTS	ACTUAL	BALANCE	PLAN	ACTUAL	OVER/UNDER	%
	_____									
	_____									
	TRANSFERS TO OTHER FUND									
4,790	T/T GENERAL FUND	9000 01	432,475		4,790	427,685	8%	1%	(374,995)	-87%
664,358	T/T WATER & SEWER O&M	9000 09	7,972,295		664,358	7,307,937	8%	8%	1	0%
	T/T WATER & SEWER B&I	9000 10								
158,558	T/T WATER & SEWER B&I	9000 10A	1,902,700		158,558	1,744,142	8%	8%	(4)	0%
73,480	T/T WATER & SEWER B&I	9000 10B	881,760		73,480	808,280	8%	8%		0%
75,000	T/T W&SB&I (METER GO)	9000 10M	900,000		75,000	825,000	8%	8%		0%
25,833	T/T W&SB&I-USA YEAST P	9000 15	310,000		25,833	284,167	8%	8%	(4)	0%
	T/T WATER & SEWER CONT	9000 17								
484,611	T/T W & S CONSTRUCTION	9000 75	1,800,000		484,611	1,315,389	8%	27%	4,015,332	223%
---			---	---	---	---	---	---	---	---
1,486,630	**TRANSFERS TO OTHER F**		**14,199,230**		**1,486,630**	**12,712,600**	**8%**	**10%**	**3,640,330**	**26%**
---			---	---	---	---	---	---	---	---
1,486,630	**TRANSFERS**		**14,199,230**		**1,486,630**	**12,712,600**	**8%**	**10%**	**3,640,330**	**26%**
---			---	---	---	---	---	---	---	---
1,486,630	**EXPENDITURES**		**14,199,230**		**1,486,630**	**12,712,600**	**8%**	**10%**	**3,640,330**	**26%**

CITY OF HATTIESBURG
EXPENDITURE REPORT
1 Months Ending 10/31/12

011660 - WATER & SEWER-CUST.ACCT.DIV.

THIS MONTH ACTUAL		OBJ/SUB	ANNUAL BUDGET	OPEN PO & CONTRACTS	YTD ACTUAL	REMAINING BALANCE	PERCENT PLAN	PERCENT ACTUAL	....PROJECTED.... OVER/UNDER	%
	OTHER SERVICES & CHARGE									
	DEPR. EXPENSE - METERS	6800								
	CASH OVERAGE/SHORTAGE	6819								
138	BANK SERV/TRF FEE	6832	2,400		138	2,263	8%	6%	(744)	-31%
	REFUNDS	6835								
114	WATER RELATED REFUND	6835 WTR	20,000		114	19,886	8%	1%	(18,632)	-93%
---			---	---	---	---	---	---	---	---
114	**REFUNDS**		**20,000**		**114**	**19,886**	**8%**	**1%**	**(18,632)**	**-93%**
	NSF CHECKS	6836								
	BAD DEBT EXPENSE	6837								
	OTHER INCOME EXPENSE	6839								
---			---	---	---	---	---	---	---	---
251	**OTHER SERVICES & CHA**		**22,400**		**251**	**22,149**	**8%**	**1%**	**(19,388)**	**-87%**
---			---	---	---	---	---	---	---	---
251	**OTHER SERVICES & CHAR**		**22,400**		**251**	**22,149**	**8%**	**1%**	**(19,388)**	**-87%**
---			---	---	---	---	---	---	---	---
251	**EXPENDITURES**		**22,400**		**251**	**22,149**	**8%**	**1%**	**(19,388)**	**-87%**

			CITY OF HATTIESBURG							
	012452 - 1999 TAX INCRE B&I-GENOBLIGA		EXPENDITURE REPORT							
			1 Months Ending 10/31/12							
THIS MONTH			ANNUAL	OPEN PO	YTD	REMAINING	PERCENT		....PROJECTED....	
ACTUAL		OBJ/SUB	BUDGET	& CONTRACTS	ACTUAL	BALANCE	PLAN	ACTUAL	OVER/UNDER	%
	OTHER SERVICES & CHARGE									
	PROP.TAX COLL. FEES .0	6830								
	PROP.TAX COLL. FEES.00	6831								
	BANK SERV/TRF FEE	6832								
	OTHER SERVICES & CHA									
	OTHER SERVICES & CHAR									
	BONDS REDEEMED									
55,000	IND/ECON DEV ISSUES	8020	55,000		55,000		8%	100%	605,000	100%
55,000	**BONDS REDEEMED**		**55,000**		**55,000**		**8%**	**100%**	**605,000**	**100%**
	INTEREST ON BONDS									
9,188	IND/ECON DEV ISSUES	8120	9,200		9,188	13	8%	100%	101,056	98%
9,188	**INTEREST ON BONDS**		**9,200**		**9,188**	**13**	**8%**	**100%**	**101,056**	**98%**
	PAYING AGENT FEES									
	IND/ECON DEV ISSUES	8420	2,000			2,000	8%	0%	(2,000)	-100%
	PAYING AGENT FEES		**2,000**			**2,000**	**8%**	**0%**	**(2,000)**	**-100%**
64,188	**DEBT SERVICE**		**66,200**		**64,188**	**2,013**	**8%**	**97%**	**704,056**	**64%**
64,188	**EXPENDITURES**		**66,200**		**64,188**	**2,013**	**8%**	**97%**	**704,056**	**64%**

CITY OF HATTIESBURG
013450 - CITY B&I-GENERAL OBLIGATIONS
EXPENDITURE REPORT
1 Months Ending 10/31/12

THIS MONTH ACTUAL		OBJ/SUB	ANNUAL BUDGET	OPEN PO & CONTRACTS	YTD ACTUAL	REMAINING BALANCE	PERCENT PLAN	PERCENT ACTUAL	....PROJECTED.... OVER/UNDER	%
	INTERGOV'TL-DEBT SERV									
14,710	P&I-FORREST CTY(KOHLER	6455	88,259		14,710	73,549	8%	17%	88,261	100%
	INTERGOV'TL-DEBT SER		**88,259**		**14,710**	**73,549**	**8%**	**17%**	**88,261**	**100%**
	OTHER SERVICES & CHARGE									
872	PROP.TAX COLL. FEES .0	6830	14,000		872	13,128	8%	6%	(3,536)	-25%
	PROP.TAX COLL. FEES.00	6831	14,500			14,500	8%	0%	(14,500)	-100%
	BANK SERV/TRF FEE	6832								
872	**OTHER SERVICES & CHA**		**28,500**		**872**	**27,628**	**8%**	**3%**	**(18,036)**	**-63%**
15,582	**OTHER SERVICES & CHAR**		**116,759**		**15,582**	**101,177**	**8%**	**13%**	**70,225**	**60%**
	BONDS REDEEMED									
720,000	GENERAL ISSUES	8000	2,255,000		720,000	1,535,000	8%	32%	6,385,000	283%
14,471	IND/ECON DEV ISSUES	8020	400,000		14,471	385,529	8%	4%	(226,348)	-57%
	5 YEAR NOTE PRINCIPAL	8021	635,730			635,730	8%	0%	(635,730)	-100%
734,471	**BONDS REDEEMED**		**3,290,730**		**734,471**	**2,556,259**	**8%**	**22%**	**5,522,922**	**168%**
	INTEREST ON BONDS									
112,394	GENERAL ISSUES	8100	582,113		112,394	469,719	8%	19%	766,615	132%
317	IND/ECON DEV ISSUES	8120	30,000		317	29,683	8%	1%	(26,196)	-87%
	5 YEAR NOTE INTEREST	8121	24,500			24,500	8%	0%	(24,500)	-100%
112,711	**INTEREST ON BONDS**		**636,613**		**112,711**	**523,902**	**8%**	**18%**	**715,919**	**112%**
	PAYING AGENT FEES									
4,750	GENERAL ISSUES	8400	15,000		4,750	10,250	8%	32%	42,000	280%
	IND/ECON DEV ISSUES	8420								
4,750	**PAYING AGENT FEES**		**15,000**		**4,750**	**10,250**	**8%**	**32%**	**42,000**	**280%**
851,932	**DEBT SERVICE**		**3,942,343**		**851,932**	**3,090,411**	**8%**	**22%**	**6,280,841**	**159%**
867,514	**EXPENDITURES**		**4,059,102**		**867,514**	**3,191,588**	**8%**	**21%**	**6,351,066**	**156%**

			CITY OF HATTIESBURG							
	014599 - SCHOOL FUND-MISC.CHARGES		EXPENDITURE REPORT							
			1 Months Ending 10/31/12							
THIS MONTH			ANNUAL	OPEN PO	YTD	REMAINING	PERCENT		....PROJECTED....	
ACTUAL		OBJ/SUB	BUDGET	& CONTRACTS	ACTUAL	BALANCE	PLAN	ACTUAL	OVER/UNDER	%
	OTHER SERVICES & CHARGE									
4,892	PROP.TAX COLL. FEES .0	6830			4,892	(4,892)			58,704	
520	PROP.TAX COLL. FEES.00	6831			520	(520)			6,240	
---			---	---	---	---	---	---	---	---
5,412	**OTHER SERVICES & CHA**				**5,412**	**(5,412)**			**64,944**	
---			---	---	---	---	---	---	---	---
5,412	**OTHER SERVICES & CHAR**				**5,412**	**(5,412)**			**64,944**	
---			---	---	---	---	---	---	---	---
5,412	**EXPENDITURES**				**5,412**	**(5,412)**			**64,944**	

			CITY OF HATTIESBURG							
	015451 - W&S B&I USA YEAST-REVOBLIGA		EXPENDITURE REPORT							
			1 Months Ending 10/31/12							
THIS MONTH			ANNUAL	OPEN PO	YTD	REMAINING	PERCENT		....PROJECTED....	
ACTUAL		OBJ/SUB	BUDGET	& CONTRACTS	ACTUAL	BALANCE	PLAN	ACTUAL	OVER/UNDER	%
	BONDS REDEEMED									
	REVENUE ISSUES	8010	385,000			385,000	8%	0%	(385,000)	-100%
---			---	---	---	---	---	---	---	---
	BONDS REDEEMED		**385,000**			**385,000**	**8%**	**0%**	**(385,000)**	**-100%**
	INTEREST ON BONDS									
	REVENUE ISSUES	8110	23,100			23,100	8%	0%	(23,100)	-100%
---			---	---	---	---	---	---	---	---
	INTEREST ON BONDS		**23,100**			**23,100**	**8%**	**0%**	**(23,100)**	**-100%**
	PAYING AGENT FEES									
	REVENUE ISSUES	8410	5,000			5,000	8%	0%	(5,000)	-100%
---			---	---	---	---	---	---	---	---
	PAYING AGENT FEES		**5,000**			**5,000**	**8%**	**0%**	**(5,000)**	**-100%**
---			---	---	---	---	---	---	---	---
	DEBT SERVICE		**413,100**			**413,100**	**8%**	**0%**	**(413,100)**	**-100%**
---			---	---	---	---	---	---	---	---
	EXPENDITURES		**413,100**			**413,100**	**8%**	**0%**	**(413,100)**	**-100%**

CITY OF HATTIESBURG
018701 - P&FD&R-TRUST AND AGENCY
EXPENDITURE REPORT
1 Months Ending 10/31/12

THIS MONTH ACTUAL		OBJ/SUB	ANNUAL BUDGET	OPEN PO & CONTRACTS	YTD ACTUAL	REMAINING BALANCE	PERCENT PLAN	PERCENT ACTUAL	....PROJECTED.... OVER/UNDER	%
	PROFESSIONAL SERVICES									
	AUDITING AND ACCOUNTIN	6010								
2,196	OTHER PROFESSIONAL SER	6049			2,196	(2,196)			26,352	
---			---	---	---	---	---	---	---	---
2,196	**PROFESSIONAL SERVICE**				**2,196**	**(2,196)**			**26,352**	
	OTHER SERVICES & CHANGE									
224,596	PENSION EXPENSE	6825			224,596	(224,596)			2,695,152	
588	PROP.TAX COLL. FEES .0	6830			588	(588)			7,056	
	PROP.TAX COLL. FEES.00	6831								
	REFUNDS	6835								
	PFDR ACC. CONTRI. REF	6835 PFDR								
---			---	---	---	---	---	---	---	---
	REFUNDS									
---			---	---	---	---	---	---	---	---
225,184	**OTHER SERVICES & CHA**				**225,184**	**(225,184)**			**2,702,208**	
---			---	---	---	---	---	---	---	---
227,380	**OTHER SERVICES & CHAR**				**227,380**	**(227,380)**			**2,728,560**	
---			---	---	---	---	---	---	---	---
227,380	**EXPENDITURES**				**227,380**	**(227,380)**			**2,728,560**	

CITY OF HATTIESBURG
019100 - POL.FORFEITURES-POLICEDIV.
EXPENDITURE REPORT
1 Months Ending 10/31/12

THIS MONTH ACTUAL		OBJ/SUB	ANNUAL BUDGET	OPEN PO & CONTRACTS	YTD ACTUAL	REMAINING BALANCE	PERCENT PLAN	PERCENT ACTUAL	....PROJECTED.... OVER/UNDER	%
	OFFICE SUPPLIES									
	OTHER EXPENDABLE OFF.S	5010								
	OFFICE SUPPLIES									
	OPERATING SUPPLIES									
	FOOD	5115								
	GAS AND OIL	5250								
	UNIFORMS, BADGES, ETC.	5350								
	WEARING APPAREL	5355								
	WEARING APPAREL-HURR R	5356								
	MINOR EQUIPMENT	5460	3,360	3,360			8%	0%	(3,360)	-100%
	DISPATCHER TRNG.MATERI	5468								
	MINOR EQ-HURR.RELIEF	5471								
	OTHER OPER.MATLS-K-9 S	5590								
312	OTHER OPER.MATLS-CRIME	5591	8,640	779	312	7,549	8%	4%	(4,896)	-57%
	OTHER OPER.MATLS-D.A.R	5592	133,400	1,085		132,315	8%	0%	(133,400)	-100%
	OTHER OPER-NON-SWORN C	5595								
	PAINT AND PAINTING SPL	5650								
	COMMUNICATION REPAIR P	5750								
	MINOR COMPUTER EQUIP.	5800								
312	**OPERATING SUPPLIES**		**145,400**	**5,224**	**312**	**139,864**	**8%**	**0%**	**(141,656)**	**-97%**
312	**SUPPLIES AND EXPENSES**		**145,400**	**5,224**	**312**	**139,864**	**8%**	**0%**	**(141,656)**	**-97%**
	PROFESSIONAL SERVICES									
	METRO CRIME STOPPERS	6039	10,000			10,000	8%	0%	(10,000)	-100%
	FEES - NON-SWORN CLASS	6044								
	OTHER PROFESSIONAL SER	6049								
	PROFESSIONAL SERVICE		**10,000**			**10,000**	**8%**	**0%**	**(10,000)**	**-100%**
	COMMUNICATIONS									
	TELEPHONE AND TELEGRAP	6060								
	COMMUNICATIONS									

			CITY OF HATTIESBURG							
	019100 - POL.FORFEITURES-POLICEDIV.		EXPENDITURE REPORT							
			1 Months Ending 10/31/12							
THIS MONTH			ANNUAL	OPEN PO	YTD	REMAINING	PERCENT		....PROJECTED....	
ACTUAL		OBJ/SUB	BUDGET	& CONTRACTS	ACTUAL	BALANCE	PLAN	ACTUAL	OVER/UNDER	%
	TRANSPORTATION									
	TRAVEL EXPENSE	6110	5,000			5,000	8%	0%	(5,000)	-100%
	TRAVEL EXP-M/C TRAININ	6112	5,000			5,000	8%	0%	(5,000)	-100%
	TRAVEL EXP-K-9 TRAININ	6113								
	TRAVEL EXP-TELECOMMUNI	6114								
	TRAVEL/REG-NON SWORN P	6117								
	FREIGHT	6120								
---			---	---	---	---	---	---	---	---
	TRANSPORTATION		**10,000**			**10,000**	**8%**	**0%**	**(10,000)**	**-100%**
	ADVERTISING									
	ADVERTISING	6150								
---			---	---	---	---	---	---	---	---
	ADVERTISING									
	PRINTING AND BINDING									
	PRINTING	6200								
---			---	---	---	---	---	---	---	---
	PRINTING AND BINDING									
	OTHER SERVICES & CHARGE									
	EVIDENCE BUY MONEY	6817	5,000			5,000	8%	0%	(5,000)	-100%
	GRANT RELATED REFUND	6835 STATE								
---			---	---	---	---	---	---	---	---
	EVIDENCE BUY MONEY		**5,000**			**5,000**	**8%**	**0%**	**(5,000)**	**-100%**
	DUES AND MEMBERSHIPS	6840	2,500			2,500	8%	0%	(2,500)	-100%
	REGISTRATION FEE/TUITI	6845	2,500			2,500	8%	0%	(2,500)	-100%
---			---	---	---	---	---	---	---	---
	OTHER SERVICES & CHA		**10,000**			**10,000**	**8%**	**0%**	**(10,000)**	**-100%**
---			---	---	---	---	---	---	---	---
	OTHER SERVICES & CHAR		**30,000**			**30,000**	**8%**	**0%**	**(30,000)**	**-100%**
	_____									
	LAND									
	LAND	7000								
---			---	---	---	---	---	---	---	---
	LAND									
	BUILDING/BLD IMPROVEMEN									
	BUILDINGS	7100								
	POLICE SERV CTR BLDG	7100 22								
---			---	---	---	---	---	---	---	---

			CITY OF HATTIESBURG							
	019100 - POL.FORFEITURES-POLICEDIV.		EXPENDITURE REPORT							
			1 Months Ending 10/31/12							
THIS MONTH			ANNUAL	OPEN PO	YTD	REMAINING	PERCENT		....PROJECTED....	
ACTUAL		OBJ/SUB	BUDGET	& CONTRACTS	ACTUAL	BALANCE	PLAN	ACTUAL	OVER/UNDER	%
	BUILDINGS									
---			---	---	---	---	---	---	---	---
	BUILDING/BLD IMPROVE									
	MACHINERY AND EQUIPMENT									
	OFFICE FURN/EQUIP.	7325								
	DATA PROCESSING EQUIP.	7327								
	COMMUNICATION EQUIPMEN	7355								
	EQUIP-HURR.RELIEF	7376								
	OTHER EQUIPMENT	7399	27,256			27,256	8%	0%	(27,256)	-100%
---			---	---	---	---	---	---	---	---
	MACHINERY AND EQUIPM		**27,256**			**27,256**	**8%**	**0%**	**(27,256)**	**-100%**
	VEHICLES									
	AUTOMOBILES	7400	47,311	47,311			8%	0%	(47,311)	-100%
	MOTORCYCLES	7405								
---			---	---	---	---	---	---	---	---
	VEHICLES		**47,311**	**47,311**			**8%**	**0%**	**(47,311)**	**-100%**
	OTHER									
	ZOOLOGICAL ANIMALS	7505								
---			---	---	---	---	---	---	---	---
	OTHER									
---			---	---	---	---	---	---	---	---
	CAPITAL OUTLAY		**74,567**	**47,311**		**27,256**	**8%**	**0%**	**(74,567)**	**-100%**
---			---	---	---	---	---	---	---	---
312	**EXPENDITURES**		**249,967**	**52,535**	**312**	**197,120**	**8%**	**0%**	**(246,223)**	**-99%**

CITY OF HATTIESBURG
020452 - 2002 TIF B&I-S/P GEN OBLIGA
EXPENDITURE REPORT
1 Months Ending 10/31/12

THIS MONTH ACTUAL		OBJ/SUB	ANNUAL BUDGET	OPEN PO & CONTRACTS	YTD ACTUAL	REMAINING BALANCE	PERCENT PLAN	PERCENT ACTUAL	....PROJECTED.... OVER/UNDER	%
	OTHER SERVICES & CHARGE									
	PROP.TAX COLL. FEES .0	6830								
	PROP.TAX COLL. FEES.00	6831								
	BANK SERV/TRF FEE	6832	50			50	8%	0%	(50)	-100%
	OTHER SERVICES & CHA		**50**			**50**	**8%**	**0%**	**(50)**	**-100%**
	OTHER SERVICES & CHAR		**50**			**50**	**8%**	**0%**	**(50)**	**-100%**
	BONDS REDEEMED									
85,000	IND/ECON DEV ISSUES	8020	85,000		85,000		8%	100%	935,000	100%
85,000	**BONDS REDEEMED**		**85,000**		**85,000**		**8%**	**100%**	**935,000**	**100%**
	INTEREST ON BONDS									
3,825	IND/ECON DEV ISSUES	8120	3,825		3,825		8%	100%	42,075	100%
3,825	**INTEREST ON BONDS**		**3,825**		**3,825**		**8%**	**100%**	**42,075**	**100%**
	PAYING AGENT FEES									
	IND/ECON DEV ISSUES	8420	1,200			1,200	8%	0%	(1,200)	-100%
	PAYING AGENT FEES		**1,200**			**1,200**	**8%**	**0%**	**(1,200)**	**-100%**
88,825	**DEBT SERVICE**		**90,025**		**88,825**	**1,200**	**8%**	**99%**	**975,875**	**84%**
88,825	**EXPENDITURES**		**90,075**		**88,825**	**1,250**	**8%**	**99%**	**975,825**	**83%**

			CITY OF HATTIESBURG							
	021452 - 2004 TIF B&I-H/D GEN OBLIGA		EXPENDITURE REPORT							
			1 Months Ending 10/31/12							
THIS MONTH			ANNUAL	OPEN PO	YTD	REMAINING	PERCENT		....PROJECTED....	
ACTUAL		OBJ/SUB	BUDGET	& CONTRACTS	ACTUAL	BALANCE	PLAN	ACTUAL	OVER/UNDER	%
	OTHER SERVICES & CHARGE									
	PROP.TAX COLL. FEES .0	6830								
	PROP.TAX COLL. FEES.00	6831								
	BANK SERV/TRF FEE	6832								
---			---	---	---	---	---	---	---	---
	OTHER SERVICES & CHA									
---			---	---	---	---	---	---	---	---
	OTHER SERVICES & CHAR									
	BONDS REDEEMED									
75,000	IND/ECON DEV ISSUES	8020	75,000		75,000		8%	100%	825,000	100%
---			---	---	---	---	---	---	---	---
75,000	**BONDS REDEEMED**		**75,000**		**75,000**		**8%**	**100%**	**825,000**	**100%**
	INTEREST ON BONDS									
4,945	IND/ECON DEV ISSUES	8120	8,345		4,945	3,400	8%	59%	50,995	611%
---			---	---	---	---	---	---	---	---
4,945	**INTEREST ON BONDS**		**8,345**		**4,945**	**3,400**	**8%**	**59%**	**50,995**	**611%**
	PAYING AGENT FEES									
750	IND/ECON DEV ISSUES	8420	1,000		750	250	8%	75%	8,000	800%
---			---	---	---	---	---	---	---	---
750	**PAYING AGENT FEES**		**1,000**		**750**	**250**	**8%**	**75%**	**8,000**	**800%**
---			---	---	---	---	---	---	---	---
80,695	**DEBT SERVICE**		**84,345**		**80,695**	**3,650**	**8%**	**96%**	**883,995**	**48%**
---			---	---	---	---	---	---	---	---
80,695	**EXPENDITURES**		**84,345**		**80,695**	**3,650**	**8%**	**96%**	**883,995**	**48%**

			CITY OF HATTIESBURG							
	022452 - 2003 TIF B&I-C/S GEN OBLIGA		EXPENDITURE REPORT							
			1 Months Ending 10/31/12							
THIS MONTH			ANNUAL	OPEN PO	YTD	REMAINING	PERCENT		....PROJECTED....	
ACTUAL		OBJ/SUB	BUDGET	& CONTRACTS	ACTUAL	BALANCE	PLAN	ACTUAL	OVER/UNDER	%
	OTHER SERVICES & CHARGE									
	PROP.TAX COLL. FEES .0	6830								
	PROP.TAX COLL. FEES.00	6831								
	BANK SERV/TRF FEE	6832								
---			---	---	---	---	---	---	---	---
	OTHER SERVICES & CHA									
---			---	---	---	---	---	---	---	---
	OTHER SERVICES & CHAR									
	BONDS REDEEMED									
	IND/ECON DEV ISSUES	8020	95,000			95,000	8%	0%	(95,000)	-100%
---			---	---	---	---	---	---	---	---
	BONDS REDEEMED		**95,000**			**95,000**	**8%**	**0%**	**(95,000)**	**-100%**
	INTEREST ON BONDS									
	IND/ECON DEV ISSUES	8120	97,210			97,210	8%	0%	(97,210)	-100%
---			---	---	---	---	---	---	---	---
	INTEREST ON BONDS		**97,210**			**97,210**	**8%**	**0%**	**(97,210)**	**-100%**
	PAYING AGENT FEES									
	IND/ECON DEV ISSUES	8420	2,000			2,000	8%	0%	(2,000)	-100%
---			---	---	---	---	---	---	---	---
	PAYING AGENT FEES		**2,000**			**2,000**	**8%**	**0%**	**(2,000)**	**-100%**
---			---	---	---	---	---	---	---	---
	DEBT SERVICE		**194,210**			**194,210**	**8%**	**0%**	**(194,210)**	**-100%**
---			---	---	---	---	---	---	---	---
	EXPENDITURES		**194,210**			**194,210**	**8%**	**0%**	**(194,210)**	**-100%**

			CITY OF HATTIESBURG							
	022500 - '03 TIF B&I-C/S-TRANSFERS		EXPENDITURE REPORT							
			1 Months Ending 10/31/12							
THIS MONTH			ANNUAL	OPEN PO	YTD	REMAINING	PERCENT		....PROJECTED....	
ACTUAL		OBJ/SUB	BUDGET	& CONTRACTS	ACTUAL	BALANCE	PLAN	ACTUAL	OVER/UNDER	%
	_____									
	_____									
	TRANSFERS TO OTHER FUND									
	T/T GENERAL FUND	9000 01								
---			---	---	---	---	---	---	---	---
	TRANSFERS TO OTHER F									
---			---	---	---	---	---	---	---	---
	TRANSFERS									
---			---	---	---	---	---	---	---	---
	EXPENDITURES									

			CITY OF HATTIESBURG							
	023452 - 2007 TIF B&I-T/C GEN OBLIGA		EXPENDITURE REPORT							
			1 Months Ending 10/31/12							
THIS MONTH			ANNUAL	OPEN PO	YTD	REMAINING	PERCENT		....PROJECTED....	
ACTUAL		OBJ/SUB	BUDGET	& CONTRACTS	ACTUAL	BALANCE	PLAN	ACTUAL	OVER/UNDER	%
	OTHER SERVICES & CHARGE									
	PROP.TAX COLL. FEES .0	6830								
	PROP.TAX COLL. FEES.00	6831								
	BANK SERV/TRF FEE	6832								
---			---	---	---	---	---	---	---	---
	OTHER SERVICES & CHA									
---			---	---	---	---	---	---	---	---
	OTHER SERVICES & CHAR									
	BONDS REDEEMED									
	IND/ECON DEV ISSUES	8020	285,000			285,000	8%	0%	(285,000)	-100%
---			---	---	---	---	---	---	---	---
	BONDS REDEEMED		**285,000**			**285,000**	**8%**	**0%**	**(285,000)**	**-100%**
	INTEREST ON BONDS									
	IND/ECON DEV ISSUES	8120	149,776			149,776	8%	0%	(149,776)	-100%
---			---	---	---	---	---	---	---	---
	INTEREST ON BONDS		**149,776**			**149,776**	**8%**	**0%**	**(149,776)**	**-100%**
	PAYING AGENT FEES									
	IND/ECON DEV ISSUES	8420	5,000			5,000	8%	0%	(5,000)	-100%
---			---	---	---	---	---	---	---	---
	PAYING AGENT FEES		**5,000**			**5,000**	**8%**	**0%**	**(5,000)**	**-100%**
---			---	---	---	---	---	---	---	---
	DEBT SERVICE		**439,776**			**439,776**	**8%**	**0%**	**(439,776)**	**-100%**
---			---	---	---	---	---	---	---	---
	EXPENDITURES		**439,776**			**439,776**	**8%**	**0%**	**(439,776)**	**-100%**

			CITY OF HATTIESBURG							
	024452 - 2008 TIF B&I-L/C GEN OBLIGA		EXPENDITURE REPORT							
			1 Months Ending 10/31/12							
THIS MONTH			ANNUAL	OPEN PO	YTD	REMAINING	PERCENT		....PROJECTED....	
ACTUAL		OBJ/SUB	BUDGET	& CONTRACTS	ACTUAL	BALANCE	PLAN	ACTUAL	OVER/UNDER	%
	_____									
	_____									
	OTHER SERVICES & CHARGE									
	PROP.TAX COLL. FEES .0	6830								
	PROP.TAX COLL. FEES.00	6831								
	BANK SERV/TRF FEE	6832								
---			---	---	---	---	---	---	---	---
	OTHER SERVICES & CHA									
---			---	---	---	---	---	---	---	---
	OTHER SERVICES & CHAR									
	_____									
	BONDS REDEEMED									
	IND/ECON DEV ISSUES	8020	35,000			35,000	8%	0%	(35,000)	-100%
---			---	---	---	---	---	---	---	---
	BONDS REDEEMED		**35,000**			**35,000**	**8%**	**0%**	**(35,000)**	**-100%**
	INTEREST ON BONDS									
	IND/ECON DEV ISSUES	8120	18,700			18,700	8%	0%	(18,700)	-100%
---			---	---	---	---	---	---	---	---
	INTEREST ON BONDS		**18,700**			**18,700**	**8%**	**0%**	**(18,700)**	**-100%**
	PAYING AGENT FEES									
	IND/ECON DEV ISSUES	8420	1,000			1,000	8%	0%	(1,000)	-100%
---			---	---	---	---	---	---	---	---
	PAYING AGENT FEES		**1,000**			**1,000**	**8%**	**0%**	**(1,000)**	**-100%**
---			---	---	---	---	---	---	---	---
	DEBT SERVICE		**54,700**			**54,700**	**8%**	**0%**	**(54,700)**	**-100%**
---			---	---	---	---	---	---	---	---
	EXPENDITURES		**54,700**			**54,700**	**8%**	**0%**	**(54,700)**	**-100%**

CITY OF HATTIESBURG
EXPENDITURE REPORT
1 Months Ending 10/31/12

025452 - 2011 TIF B&I-KOHLS GENOBLIGA

THIS MONTH ACTUAL		OBJ/SUB	ANNUAL BUDGET	OPEN PO & CONTRACTS	YTD ACTUAL	REMAINING BALANCE	PERCENT PLAN	PERCENT ACTUAL	....PROJECTED.... OVER/UNDER	%
	OTHER SERVICES & CHARGE									
	PROP.TAX COLL. FEES .0	6830								
	PROP.TAX COLL. FEES.00	6831								
	BANK SERV/TRF FEE	6832								
---			---	---	---	---	---	---	---	---
	OTHER SERVICES & CHA									
---			---	---	---	---	---	---	---	---
	OTHER SERVICES & CHAR									
	BONDS REDEEMED									
	IND/ECON DEV ISSUES	8020	60,000			60,000	8%	0%	(60,000)	-100%
---			---	---	---	---	---	---	---	---
	BONDS REDEEMED		**60,000**			**60,000**	**8%**	**0%**	**(60,000)**	**-100%**
	INTEREST ON BONDS									
	IND/ECON DEV ISSUES	8120	32,000			32,000	8%	0%	(32,000)	-100%
---			---	---	---	---	---	---	---	---
	INTEREST ON BONDS		**32,000**			**32,000**	**8%**	**0%**	**(32,000)**	**-100%**
	PAYING AGENT FEES									
	IND/ECON DEV ISSUES	8420	1,000			1,000	8%	0%	(1,000)	-100%
---			---	---	---	---	---	---	---	---
	PAYING AGENT FEES		**1,000**			**1,000**	**8%**	**0%**	**(1,000)**	**-100%**
---			---	---	---	---	---	---	---	---
	DEBT SERVICE		**93,000**			**93,000**	**8%**	**0%**	**(93,000)**	**-100%**
---			---	---	---	---	---	---	---	---
	EXPENDITURES		**93,000**			**93,000**	**8%**	**0%**	**(93,000)**	**-100%**

			CITY OF HATTIESBURG							
	027500 - TAX COLLECTOR'S-TRANSFERS		EXPENDITURE REPORT							
			1 Months Ending 10/31/12							
THIS MONTH			ANNUAL	OPEN PO	YTD	REMAINING	PERCENT		....PROJECTED....	
ACTUAL		OBJ/SUB	BUDGET	& CONTRACTS	ACTUAL	BALANCE	PLAN	ACTUAL	OVER/UNDER	%
	TRANSFERS TO OTHER FUND									
87,200	T/T GENERAL FUND	9000 01			87,200	(87,200)			1,046,400	
	T/T GENERAL FD-C.C. FE	9000 01CC								
	T/T GENERAL FD-EXCESS	9000 01EB								
	T/T GENERAL FD-CHKG IN	9000 01ICH	K							
31,087	T/T GENERAL FD-INT/PEN	9000 01IP			31,087	(31,087)			373,044	
5,629	T/T PARKS & RECERATION	9000 02			5,629	(5,629)			67,548	
5,483	T/T LIBRARY	9000 04			5,483	(5,483)			65,796	
	T/T 1999 TAX INCRE B&I	9000 12								
20,116	T/T CITY B & I	9000 13			20,116	(20,116)			241,392	
117,489	T/T SCHOOL FUND	9000 14			117,489	(117,489)			1,409,868	
12,533	T/T SCHOOL-1988 SCH.BO	9000 14SB			12,533	(12,533)			150,396	
13,553	T/T POL/FIRE DIS./RELI	9000 18			13,553	(13,553)			162,636	
	T/T 2002 TIF B&I-SP	9000 20								
	T/T 2004 TIF B&I-HD	9000 21								
	T/T 2003 TIF B&I-CS	9000 22								
	T/T 2007 TIF B&I-TC	9000 23								
	T/T 2008 TIF B&I-LC	9000 24								
	T/T 2011 TIF B&I-TC KO	9000 25								
1,414	T/T MASS TRANSIT OPER.	9000 73			1,414	(1,414)			16,968	
	T/T 2008 TIF CONSTR-LC	9000 90								
---			---	---	---	---	---	---	---	---
294,503	**TRANSFERS TO OTHER F**				**294,503**	**(294,503)**			**3,534,036**	
---			---	---	---	---	---	---	---	---
294,503	**TRANSFERS**				**294,503**	**(294,503)**			**3,534,036**	
---			---	---	---	---	---	---	---	---
294,503	**EXPENDITURES**				**294,503**	**(294,503)**			**3,534,036**	

			CITY OF HATTIESBURG							
	039551 - AIRPORT IMPR.-AIRPORTDIV		EXPENDITURE REPORT							
			1 Months Ending 10/31/12							
THIS MONTH			ANNUAL	OPEN PO	YTD	REMAINING	PERCENT		....PROJECTED....	
ACTUAL		OBJ/SUB	BUDGET	& CONTRACTS	ACTUAL	BALANCE	PLAN	ACTUAL	OVER/UNDER	%
	_____									
	_____									
	SALARIES									
	REGULAR WAGES	4000								
	OVERTIME	4300								
---			---	---	---	---	---	---	---	---
	SALARIES									
	EMPLOYEE BENEFITS									
	STATE RETIREMENT	4600								
	F.I.C.A. TAXES	4700								
	HOSPITALIZATION INS.	4800								
---			---	---	---	---	---	---	---	---
	EMPLOYEE BENEFITS									
---			---	---	---	---	---	---	---	---
	PERSONAL SERVICES									
	_____									
	OPERATING SUPPLIES									
	GAS AND OIL	5250								
	MINOR EQUIPMENT	5460								
	OTHER OPERATING MATL/S	5590								
---			---	---	---	---	---	---	---	---
	OPERATING SUPPLIES									
	REPAIR & MAINTENANCE SP									
	PLUMBING SUPPLIES	5610								
	PAINT AND PAINTING SPL	5650								
	OTHER REPAIR/MAINT. SP	5990								
---			---	---	---	---	---	---	---	---
	REPAIR & MAINTENANCE									
---			---	---	---	---	---	---	---	---
	SUPPLIES AND EXPENSES									
	_____									
	PROFESSIONAL SERVICES									
	ENGINEERING	6015								
	LEGAL	6025								
---			---	---	---	---	---	---	---	---
	PROFESSIONAL SERVICE									
	REPR/MAINT-OUTSIDE LABO									

			CITY OF HATTIESBURG							
	039551 - AIRPORT IMPR.-AIRPORTDIV		EXPENDITURE REPORT							
			1 Months Ending 10/31/12							
THIS MONTH			ANNUAL	OPEN PO	YTD	REMAINING	PERCENT		....PROJECTED....	
ACTUAL		OBJ/SUB	BUDGET	& CONTRACTS	ACTUAL	BALANCE	PLAN	ACTUAL	OVER/UNDER	%
	BUILDING R&M	6350								
	STREETS & STRUCTURES R	6360								
	DISINFECT./EXTERMINATI	6394								
	OTHER REPAIRS AND MAIN	6399								
	AUTOMOTIVE EQ. RENT	6415								
	OTHER RENT	6449								
---			---	---	---	---	---	---	---	---
	REPR/MAINT-OUTSIDE L									
---			---	---	---	---	---	---	---	---
	OTHER SERVICES & CHAR									
	_____									
	IMPROVEMENT OTHER THAN									
	STREETS & ROADWAYS	7230								
	STREET LIGHTING	7235								
	LIGHTING SYSTEM	7236								
	OTHER IMPROVEMENTS	7295								
	AIRPORT SIGN	7295 01								
62,577	AIRPORT IMP-FAA	7295 02	588,440		62,577	525,863	8%	11%	162,484	28%
	MDOT-MULTIMODAL	7295 06								
11,000	MISC.OTHER IMPROVEMEN	7295 99	825,000		11,000	814,000	8%	1%	(693,000)	-84%
---			---	---	---	---	---	---	---	---
73,577	**OTHER IMPROVEMENTS**		**1,413,440**		**73,577**	**1,339,863**	**8%**	**5%**	**(530,516)**	**-38%**
---			---	---	---	---	---	---	---	---
73,577	**IMPROVEMENT OTHER TH**		**1,413,440**		**73,577**	**1,339,863**	**8%**	**5%**	**(530,516)**	**-38%**
	MACHINERY AND EQUIPMENT									
	DATA PROCESSING EQUIP.	7327								
	AGRICULTURAL EQUIPMENT	7335								
	COMMUNICATION EQUIPMEN	7355								
	OTHER EQUIPMENT	7399								
---			---	---	---	---	---	---	---	---
	MACHINERY AND EQUIPM									
---			---	---	---	---	---	---	---	---
73,577	**CAPITAL OUTLAY**		**1,413,440**		**73,577**	**1,339,863**	**8%**	**5%**	**(530,516)**	**-38%**
---			---	---	---	---	---	---	---	---
73,577	**EXPENDITURES**		**1,413,440**		**73,577**	**1,339,863**	**8%**	**5%**	**(530,516)**	**-38%**

			CITY OF HATTIESBURG							
	050602 - 2009 RFDG BONDS-ISSUEEXP		EXPENDITURE REPORT							
			1 Months Ending 10/31/12							
THIS MONTH			ANNUAL	OPEN PO	YTD	REMAINING	PERCENT		....PROJECTED....	
ACTUAL		OBJ/SUB	BUDGET	& CONTRACTS	ACTUAL	BALANCE	PLAN	ACTUAL	OVER/UNDER	%
	_____									
	_____									
	PROFESSIONAL SERVICES									
	CONSULTANT SERV/SURVEY	6020								
	LEGAL	6025								
	OTHER PROFESSIONAL SER	6049								
---			---	---	---	---	---	---	---	---
	PROFESSIONAL SERVICE									
	INSURANCE									
	OTHER INSURANCE	6299								
---			---	---	---	---	---	---	---	---
	INSURANCE									
---			---	---	---	---	---	---	---	---
	OTHER SERVICES & CHAR									
	_____									
	BONDS REDEEMED									
	GENERAL ISSUES	8000								
---			---	---	---	---	---	---	---	---
	BONDS REDEEMED									
	INTEREST ON BONDS									
	GENERAL ISSUES	8100								
---			---	---	---	---	---	---	---	---
	INTEREST ON BONDS									
	PAYING AGENT FEES									
	GENERAL ISSUES	8400								
---			---	---	---	---	---	---	---	---
	PAYING AGENT FEES									
---			---	---	---	---	---	---	---	---
	DEBT SERVICE									
---			---	---	---	---	---	---	---	---
	EXPENDITURES									

			CITY OF HATTIESBURG							
	072201 - MUN.ROAD&BRIDGE-STREETDIV		EXPENDITURE REPORT							
			1 Months Ending 10/31/12							
THIS MONTH			ANNUAL	OPEN PO	YTD	REMAINING	PERCENT		....PROJECTED....	
ACTUAL		OBJ/SUB	BUDGET	& CONTRACTS	ACTUAL	BALANCE	PLAN	ACTUAL	OVER/UNDER	%
	OPERATING SUPPLIES									
	CHEMICALS	5130								
	ASPHALT & ASPHALT PROD	5400	150,000	15,805		134,195	8%	0%	(150,000)	-100%
	CONCRETE, CEMENT, ETC.	5405	25,000			25,000	8%	0%	(25,000)	-100%
	BRICK,STONE,MORTAR,ETC	5410	25,000			25,000	8%	0%	(25,000)	-100%
	SAND,CLAY,GRVL,FILL DI	5415	10,000			10,000	8%	0%	(10,000)	-100%
983	DRAINAGE PIPE & CULVER	5420	15,000		983	14,018	8%	7%	(3,204)	-21%
	MINOR EQUIPMENT	5460								
	STREET MARKING SUPPLIE	5550								
---			---	---	---	---	---	---	---	---
983	**OPERATING SUPPLIES**		**225,000**	**15,805**	**983**	**208,213**	**8%**	**0%**	**(213,204)**	**-95%**
	REPAIR & MAINTENANCE SP									
	BUILDING MATERIALS & S	5600								
	PLUMBING SUPPLIES	5610								
	STRUCTURAL STEEL & IRO	5620								
---			---	---	---	---	---	---	---	---
	REPAIR & MAINTENANCE									
---			---	---	---	---	---	---	---	---
983	**SUPPLIES AND EXPENSES**		**225,000**	**15,805**	**983**	**208,213**	**8%**	**0%**	**(213,204)**	**-95%**
	PROFESSIONAL SERVICES									
18,601	ENGINEERING	6015	262,000		18,601	243,399	8%	7%	(38,788)	-15%
	APPRAISAL	6017								
2,166	LEGAL	6025	2,500		2,166	334	8%	87%	23,492	940%
	OTHER PROFESSIONAL SER	6049	61,500			61,500	8%	0%	(61,500)	-100%
---			---	---	---	---	---	---	---	---
20,767	**PROFESSIONAL SERVICE**		**326,000**		**20,767**	**305,233**	**8%**	**6%**	**(76,796)**	**-24%**
	TRANSPORTATION									
	TRAVEL EXPENSE	6110								
---			---	---	---	---	---	---	---	---
	TRANSPORTATION									
	REPR/MAINT-OUTSIDE LABO									
10,866	STREETS & STRUCTURES R	6360	272,000	168,086	10,866	93,047	8%	4%	(141,608)	-52%
	MINOR EQUIPMENT R&M	6382								
---			---	---	---	---	---	---	---	---

			CITY OF HATTIESBURG							
	072201 - MUN.ROAD&BRIDGE-STREETDIV		EXPENDITURE REPORT							
			1 Months Ending 10/31/12							
THIS MONTH			ANNUAL	OPEN PO	YTD	REMAINING	PERCENT		....PROJECTED....	
ACTUAL		OBJ/SUB	BUDGET	& CONTRACTS	ACTUAL	BALANCE	PLAN	ACTUAL	OVER/UNDER	%
10,866	**REPR/MAINT-OUTSIDE L**		**272,000**	**168,086**	**10,866**	**93,047**	**8%**	**4%**	**(141,608)**	**-52%**
	RENTALS									
36,612	MACHINERY RENT	6420	68,000		36,612	31,388	8%	54%	371,344	546%
---			---	---	---	---	---	---	---	---
36,612	**RENTALS**		**68,000**		**36,612**	**31,388**	**8%**	**54%**	**371,344**	**546%**
	OTHER SERVICES & CHARGE									
	BANK SERV/TRF FEE	6832								
	8/29 TIPPING FEES	6880								
	8/29 TIPPING-PW7311	6880 01								
	8/29 TIPPING-PW8157	6880 02								
	8/29 TIPPING-PW7711	6880 03								
---			---	---	---	---	---	---	---	---
	8/29 TIPPING FEES									
---			---	---	---	---	---	---	---	---
	OTHER SERVICES & CHA									
---			---	---	---	---	---	---	---	---
68,246	**OTHER SERVICES & CHAR**		**666,000**	**168,086**	**68,246**	**429,668**	**8%**	**10%**	**152,952**	**23%**
	_____									
	LAND									
	LAND	7000	353,500			353,500	8%	0%	(353,500)	-100%
	EASEMENTS	7010								
---			---	---	---	---	---	---	---	---
	LAND		**353,500**			**353,500**	**8%**	**0%**	**(353,500)**	**-100%**
	IMPROVEMENT OTHER THAN									
	DRAINS	7215								
	MOBILE ST (CDBG)	7215 14								
---			---	---	---	---	---	---	---	---
	DRAINS									
	SIDEWALKS	7225								
	SIDEWALKS	7225 01	101,500	5,888		95,613	8%	0%	(101,500)	-100%
	SIDEWALKS-MDOT-SCHOOL	7225 02	262,000	2,612		259,388	8%	0%	(262,000)	-100%
	SIDEWALKS-LONG LEAF T	7225 03								
	SIDEWALKS-HWY 49	7225 04								
---			---	---	---	---	---	---	---	---
	SIDEWALKS		**363,500**	**8,500**		**355,000**	**8%**	**0%**	**(363,500)**	**-100%**
	STREETS & ROADWAYS	7230								
	INDUSTRIAL PARK ROADS	7230 02								

			CITY OF HATTIESBURG							
	072201 - MUN.ROAD&BRIDGE-STREETDIV		EXPENDITURE REPORT							
			1 Months Ending 10/31/12							
THIS MONTH			ANNUAL	OPEN PO	YTD	REMAINING	PERCENT		....PROJECTED....	
ACTUAL		OBJ/SUB	BUDGET	& CONTRACTS	ACTUAL	BALANCE	PLAN	ACTUAL	OVER/UNDER	%
11,130	WESTERN BELTWAY	7230 03	475,000		11,130	463,870	8%	2%	(341,440)	-72%
	NORTH-SOUTH CORRIDOR-	7230 04								
	RAILROAD CROSSING UPG	7230 05								
	BIKE LANES	7230 06								
	4TH ST PHASE I	7230 08								
	4TH ST PHASE II	7230 09								
	MDOT-LL TRACE-HUTCH.T	7230 10	261,000			261,000	8%	0%	(261,000)	-100%
	E.4TH STREET	7230 11								
	LAKEVIEW BRIDGE NORTH	7230 21								
	LAKEVIEW BRIDGE SOUTH	7230 22								
	FORREST STREET BRIDGE	7230 24								
	CTRY.CLUB RD. INTERSE	7230 25	375,000			375,000	8%	0%	(375,000)	-100%
	TATUM BLVD.IMPROVEMEN	7230 26								
	DOWNTOWN STREET IMPRO	7230 27								
	WEATHERSBY-S US HWY 9	7230 28								
	MAMIE ST RELOCATION	7230 34								
	MDOT-B'WAY,MOBILE TE	7230 39								
	MDOT-34TH AVE TE	7230 40	141,247			141,247	8%	0%	(141,247)	-100%
	MCLEOD ST BRIDGE	7230 41								
	BROAD ST BRIDGE	7230 42								
	HARDY WIDENING #1-MDO	7230 48								
	RAWLS SPGS LOOP RD	7230 50								
34,035	MDOT-BIKE/TROLLEY TRA	7230 51	700,000		34,035	665,965	8%	5%	(291,580)	-42%
	HARDY WIDENING #2-MDO	7230 52	510,000			510,000	8%	0%	(510,000)	-100%
	ARRA-W PINE-B'WAY TO	7230 53								
	CORRIDOR/INTERSECT.IM	7230 75		945		(945)				
	CHAUVET SQUARE PROJEC	7230 81								
	OTHER STREET IMPR.	7230 99								
---			---	---	---	---	---	---	---	---
45,165	**STREETS & ROADWAYS**		**2,462,247**	**945**	**45,165**	**2,416,137**	**8%**	**2%**	**(1,920,267)**	**-78%**
	OTHER IMPROVEMENTS	7295								
	TRAF.SIGNAL UPGRADE-I	7295 28								
	TRAF.SIGNAL-SOUTHERN	7295 29								
	TRAF.SIGNAL-TATUM/BON	7295 41								
---			---	---	---	---	---	---	---	---
	OTHER IMPROVEMENTS									
---			---	---	---	---	---	---	---	---

			CITY OF HATTIESBURG							
	072201 - MUN.ROAD&BRIDGE-STREETDIV		EXPENDITURE REPORT							
			1 Months Ending 10/31/12							
THIS MONTH			ANNUAL	OPEN PO	YTD	REMAINING	PERCENT		....PROJECTED....	
ACTUAL		OBJ/SUB	BUDGET	& CONTRACTS	ACTUAL	BALANCE	PLAN	ACTUAL	OVER/UNDER	%
45,165	**IMPROVEMENT OTHER TH**		**2,825,747**	**9,445**	**45,165**	**2,771,137**	**8%**	**2%**	**(2,283,767)**	**-81%**
	MACHINERY AND EQUIPMENT									
	AGRICULTURAL EQUIPMENT	7335								
	CONSTRUCTION EQUIPMENT	7345								
---			---	---	---	---	---	---	---	---
	MACHINERY AND EQUIPM									
	VEHICLES									
	AUTOMOBILES	7400								
	PICK UP TRUCKS	7420								
	DUMP TRUCKS	7440								
	SPECIAL TRUCKS	7450								
---			---	---	---	---	---	---	---	---
	VEHICLES									
---			---	---	---	---	---	---	---	---
45,165	**CAPITAL OUTLAY**		**3,179,247**	**9,445**	**45,165**	**3,124,637**	**8%**	**1%**	**(2,637,267)**	**-83%**
---			---	---	---	---	---	---	---	---
114,393	**EXPENDITURES**		**4,070,247**	**193,336**	**114,393**	**3,762,518**	**8%**	**3%**	**(2,697,531)**	**-66%**

			CITY OF HATTIESBURG							
	072460 - MUN.R&B FUND-CAPITAL LEASES		EXPENDITURE REPORT							
			1 Months Ending 10/31/12							
THIS MONTH			ANNUAL	OPEN PO	YTD	REMAINING	PERCENT		....PROJECTED....	
ACTUAL		OBJ/SUB	BUDGET	& CONTRACTS	ACTUAL	BALANCE	PLAN	ACTUAL	OVER/UNDER	%
	_____									
	_____									
	CAPITAL LEASE PAYMENTS									
1,089	TRACTOR LEASE '11	8512	13,273		1,089	12,184	8%	8%	(205)	-2%
906	BACKHOE LEASE '11	8514	11,020		906	10,114	8%	8%	(148)	-1%
---			---	---	---	---	---	---	---	---
1,996	**CAPITAL LEASE PAYMEN**		**24,293**		**1,996**	**22,297**	**8%**	**8%**	**(341)**	**-1%**
	INTEREST ON CAPITAL LEA									
323	TRACTOR LEASE '11	8612	3,676		323	3,353	8%	9%	200	5%
180	BACKHOE LEASE '11	8614	2,014		180	1,834	8%	9%	146	7%
---			---	---	---	---	---	---	---	---
503	**INTEREST ON CAPITAL**		**5,690**		**503**	**5,187**	**8%**	**9%**	**346**	**6%**
---			---	---	---	---	---	---	---	---
2,499	**DEBT SERVICE**		**29,983**		**2,499**	**27,484**	**8%**	**8%**	**5**	**0%**
---			---	---	---	---	---	---	---	---
2,499	**EXPENDITURES**		**29,983**		**2,499**	**27,484**	**8%**	**8%**	**5**	**0%**

			CITY OF HATTIESBURG							
	072500 - MUN.ROAD&BRIDGE-TRANSFERS		EXPENDITURE REPORT							
			1 Months Ending 10/31/12							
THIS MONTH			ANNUAL	OPEN PO	YTD	REMAINING	PERCENT		....PROJECTED....	
ACTUAL		OBJ/SUB	BUDGET	& CONTRACTS	ACTUAL	BALANCE	PLAN	ACTUAL	OVER/UNDER	%
	_____									
	_____									
	TRANSFERS TO OTHER FUND									
	T/T GENERAL FUND	9000 01								
	T/T SPECIAL STREET	9000 08								
	T/T COMMUNITY DEVELOPM	9000 82								
---			---	---	---	---	---	---	---	---
	TRANSFERS TO OTHER F									
---			---	---	---	---	---	---	---	---
	TRANSFERS									
---			---	---	---	---	---	---	---	---
	EXPENDITURES									

CITY OF HATTIESBURG
073570 - MASS TRANSIT-TRANSPORTATION
EXPENDITURE REPORT
1 Months Ending 10/31/12

THIS MONTH ACTUAL		OBJ/SUB	ANNUAL BUDGET	OPEN PO & CONTRACTS	YTD ACTUAL	REMAINING BALANCE	PERCENT PLAN	PERCENT ACTUAL	....PROJECTED.... OVER/UNDER	%
	SALARIES									
25,726	REGULAR WAGES	4000	355,859		25,726	330,133	8%	7%	(47,147)	-13%
	DISASTER RECOVERY WAGE	4010								
2,906	OVERTIME	4300	50,000		2,906	47,094	8%	6%	(15,128)	-30%
	DISASTER RECOVERY OVER	4310								
---			---	---	---	---	---	---	---	---
28,632	**SALARIES**		**405,859**		**28,632**	**377,227**	**8%**	**7%**	**(62,275)**	**-15%**
	EMPLOYEE BENEFITS									
4,083	STATE RETIREMENT	4600	57,880		4,083	53,797	8%	7%	(8,884)	-15%
2,096	F.I.C.A. TAXES	4700	31,065		2,096	28,969	8%	7%	(5,913)	-19%
5,015	HOSPITALIZATION INS.	4800	78,300		5,015	73,285	8%	6%	(18,120)	-23%
	UNEMPLOYMENT BENEFITS	4900	1,200			1,200	8%	0%	(1,200)	-100%
	WORKMAN'S COMPENSATION	4910	16,480			16,480	8%	0%	(16,480)	-100%
---			---	---	---	---	---	---	---	---
11,193	**EMPLOYEE BENEFITS**		**184,925**		**11,193**	**173,732**	**8%**	**6%**	**(50,609)**	**-27%**
---			---	---	---	---	---	---	---	---
39,825	**PERSONAL SERVICES**		**590,784**		**39,825**	**550,959**	**8%**	**7%**	**(112,884)**	**-19%**
	OFFICE SUPPLIES									
	PAPER	5003								
	PRINTED FORMS	5005								
377	OTHER EXPENDABLE OFF.S	5010	2,500		377	2,123	8%	15%	2,024	81%
	MINOR OFFICE EQUIP/FUR	5020	2,800			2,800	8%	0%	(2,800)	-100%
	SUBSCRIPTIONS,MAGS,MAP	5050								
	BOOKS	5070								
	COMPUTER SUPPLIES	5080	1,000			1,000	8%	0%	(1,000)	-100%
---			---	---	---	---	---	---	---	---
377	**OFFICE SUPPLIES**		**6,300**		**377**	**5,923**	**8%**	**6%**	**(1,776)**	**-28%**
	OPERATING SUPPLIES									
	CLEANING/JANITORIAL SP	5100	1,800			1,800	8%	0%	(1,800)	-100%
	FOOD	5115								
	MEDICAL SUPPLIES	5120	200			200	8%	0%	(200)	-100%
	CHEMICALS	5130	500			500	8%	0%	(500)	-100%
2,231	GAS AND OIL	5250	25,000		2,231	22,769	8%	9%	1,772	7%
	LUBRICANTS	5255	500			500	8%	0%	(500)	-100%

			CITY OF HATTIESBURG							
	073570 - MASS TRANSIT-TRANSPORTATION		EXPENDITURE REPORT							
			1 Months Ending 10/31/12							
THIS MONTH			ANNUAL	OPEN PO	YTD	REMAINING	PERCENT		....PROJECTED....	
ACTUAL		OBJ/SUB	BUDGET	& CONTRACTS	ACTUAL	BALANCE	PLAN	ACTUAL	OVER/UNDER	%
3,309	DIESEL FUEL	5257	130,000		3,309	126,691	8%	3%	(90,292)	-69%
	OTHER FUEL	5260								
	WEARING APPAREL	5355	1,500	368		1,133	8%	0%	(1,500)	-100%
	CONCRETE, CEMENT, ETC.	5405								
	SAND,CLAY,GRVL,FILL DI	5415								
	HAND TOOLS	5450	500			500	8%	0%	(500)	-100%
	MINOR EQUIPMENT	5460								
	OTHER OPERATING MATL/S	5590	2,000			2,000	8%	0%	(2,000)	-100%
---			---	---	---	---	---	---	---	---
5,540	**OPERATING SUPPLIES**		**162,000**	**368**	**5,540**	**156,093**	**8%**	**3%**	**(95,520)**	**-59%**
	REPAIR & MAINTENANCE SP									
	BUILDING MATERIALS & S	5600	1,000			1,000	8%	0%	(1,000)	-100%
	ELECTRICAL SUPPLIES	5605	500			500	8%	0%	(500)	-100%
	PLUMBING SUPPLIES	5610	500			500	8%	0%	(500)	-100%
	PAINT AND PAINTING SPL	5650	500			500	8%	0%	(500)	-100%
	MTR VEHICLE REP. PTS/S	5700	1,000	498		502	8%	0%	(1,000)	-100%
15,905	BUS REPAIR PARTS & SPL	5710	50,000	3,820	15,905	30,274	8%	32%	140,860	282%
	COMMUNICATION REPAIR P	5750	500			500	8%	0%	(500)	-100%
	AGRICLTRL REPAIR PTS/S	5755								
	OTHER REPAIR/MAINT. SP	5990	2,000			2,000	8%	0%	(2,000)	-100%
---			---	---	---	---	---	---	---	---
15,905	**REPAIR & MAINTENANCE**		**56,000**	**4,318**	**15,905**	**35,776**	**8%**	**28%**	**134,860**	**241%**
---			---	---	---	---	---	---	---	---
21,823	**SUPPLIES AND EXPENSES**		**224,300**	**4,686**	**21,823**	**197,791**	**8%**	**10%**	**37,576**	**17%**
	PROFESSIONAL SERVICES									
	AUDITING AND ACCOUNTIN	6010								
	CONSULTANT SERV/SURVEY	6020								
	BUILDING/BUS SECURITY	6021	4,000			4,000	8%	0%	(4,000)	-100%
	MEDICAL	6027								
	OTHER PROFESSIONAL SER	6049	4,000			4,000	8%	0%	(4,000)	-100%
---			---	---	---	---	---	---	---	---
	PROFESSIONAL SERVICE		**8,000**			**8,000**	**8%**	**0%**	**(8,000)**	**-100%**
	COMMUNICATIONS									
157	TELEPHONE AND TELEGRAP	6060	1,000		157	843	8%	16%	884	88%
	POSTAGE	6070	200			200	8%	0%	(200)	-100%
---			---	---	---	---	---	---	---	---

			CITY OF HATTIESBURG							
	073570 - MASS TRANSIT-TRANSPORTATION		EXPENDITURE REPORT							
			1 Months Ending 10/31/12							
THIS MONTH			ANNUAL	OPEN PO	YTD	REMAINING	PERCENT		....PROJECTED....	
ACTUAL		OBJ/SUB	BUDGET	& CONTRACTS	ACTUAL	BALANCE	PLAN	ACTUAL	OVER/UNDER	%
157	**COMMUNICATIONS**		**1,200**		**157**	**1,043**	**8%**	**13%**	**684**	**57%**
	TRANSPORTATION									
	TRAVEL EXPENSE	6110	7,000			7,000	8%	0%	(7,000)	-100%
	FREIGHT	6120	50			50	8%	0%	(50)	-100%
	MESSENGER/EXPRESS SERV	6130								
---			---	---	---	---	---	---	---	---
	TRANSPORTATION		**7,050**			**7,050**	**8%**	**0%**	**(7,050)**	**-100%**
	ADVERTISING									
	ADVERTISING	6150	1,000			1,000	8%	0%	(1,000)	-100%
---			---	---	---	---	---	---	---	---
	ADVERTISING		**1,000**			**1,000**	**8%**	**0%**	**(1,000)**	**-100%**
	PRINTING AND BINDING									
	PRINTING	6200								
---			---	---	---	---	---	---	---	---
	PRINTING AND BINDING									
	INSURANCE									
46,653	PUBLIC LIAB/PROPERTY D	6255	48,600		46,653	1,947	8%	96%	511,236	52%
	AUTOMOBILE INSURANCE	6265								
	SURETY AND FORGERY BON	6270								
---			---	---	---	---	---	---	---	---
46,653	**INSURANCE**		**48,600**		**46,653**	**1,947**	**8%**	**96%**	**511,236**	**52%**
	UTILITIES									
574	ELECTRICITY	6305	13,000		574	12,426	8%	4%	(6,112)	-47%
---			---	---	---	---	---	---	---	---
574	**UTILITIES**		**13,000**		**574**	**12,426**	**8%**	**4%**	**(6,112)**	**-47%**
	REPR/MAINT-OUTSIDE LABO									
	BUILDING R&M	6350	4,000			4,000	8%	0%	(4,000)	-100%
	ELECTRICAL R&M	6355								
	PLUMBING EQUIPMENT R&M	6357								
	OFFICE EQUIPMENT R&M	6365	500			500	8%	0%	(500)	-100%
	FIXED EQUIPMENT R&M	6380								
	MINOR EQUIPMENT R&M	6382								
	MOTOR VEHICLE EQ. R&M	6384	500			500	8%	0%	(500)	-100%
1,487	BUS EQUIPMENT R&M	6385	71,600	4,109	1,487	66,004	8%	2%	(53,756)	-75%
	COMMUNICATION EQ. R&M	6390	2,000			2,000	8%	0%	(2,000)	-100%
	DISINFECT./EXTERMINATI	6394	200			200	8%	0%	(200)	-100%
	SIGN PAINTING	6396	300			300	8%	0%	(300)	-100%

			CITY OF HATTIESBURG							
	073570 - MASS TRANSIT-TRANSPORTATION		EXPENDITURE REPORT							
			1 Months Ending 10/31/12							
THIS MONTH			ANNUAL	OPEN PO	YTD	REMAINING	PERCENT		....PROJECTED....	
ACTUAL		OBJ/SUB	BUDGET	& CONTRACTS	ACTUAL	BALANCE	PLAN	ACTUAL	OVER/UNDER	%
400	TOW IN CHARGES	6398	1,000		400	600	8%	40%	3,800	380%
	OTHER REPAIRS AND MAIN	6399								
---			---	---	---	---	---	---	---	---
1,887	**REPR/MAINT-OUTSIDE L**		**80,100**	**4,109**	**1,887**	**74,104**	**8%**	**2%**	**(57,456)**	**-72%**
	RENTALS									
47	CYLINDER RENT	6425	200		47	153	8%	24%	364	182%
160	UNIFORM RENT	6430	4,000		160	3,840	8%	4%	(2,080)	-52%
21	OTHER RENT	6449	500		21	479	8%	4%	(248)	-50%
---			---	---	---	---	---	---	---	---
228	**RENTALS**		**4,700**		**228**	**4,472**	**8%**	**5%**	**(1,964)**	**-42%**
	OTHER SERVICES & CHARGE									
61	PROP.TAX COLL. FEES .0	6830	800		61	739	8%	8%	(68)	-9%
	PROP.TAX COLL. FEES.00	6831	950			950	8%	0%	(950)	-100%
	DUES AND MEMBERSHIPS	6840	500			500	8%	0%	(500)	-100%
	REGISTRATION FEE/TUITI	6845	1,000			1,000	8%	0%	(1,000)	-100%
	LAUNDRY	6850								
	ARRA-OPERATIONS	6869								
	SERVICES NOT SPECIFIED	6999	3,000			3,000	8%	0%	(3,000)	-100%
---			---	---	---	---	---	---	---	---
61	**OTHER SERVICES & CHA**		**6,250**		**61**	**6,189**	**8%**	**1%**	**(5,518)**	**-88%**
---			---	---	---	---	---	---	---	---
49,560	**OTHER SERVICES & CHAR**		**169,900**	**4,109**	**49,560**	**116,231**	**8%**	**29%**	**424,820**	**250%**
	_____									
	BUILDING/BLD IMPROVEMEN									
	BUILDINGS	7100								
	BUS SHELTERS	7100 24	32,000			32,000	8%	0%	(32,000)	-100%
---			---	---	---	---	---	---	---	---
	BUILDINGS		**32,000**			**32,000**	**8%**	**0%**	**(32,000)**	**-100%**
---			---	---	---	---	---	---	---	---
	BUILDING/BLD IMPROVE		**32,000**			**32,000**	**8%**	**0%**	**(32,000)**	**-100%**
	IMPROVEMENT OTHER THAN									
	OTHER IMPROVEMENTS	7295								
	ARRA DEPOT INFO KIOSK	7295 53	104,000			104,000	8%	0%	(104,000)	-100%
8,521	ARRA IMPROVEMENTS	7295 99	234,016		8,521	225,495	8%	4%	(131,764)	-56%
---			---	---	---	---	---	---	---	---
8,521	**OTHER IMPROVEMENTS**		**338,016**		**8,521**	**329,495**	**8%**	**3%**	**(235,764)**	**-70%**
---			---	---	---	---	---	---	---	---

			CITY OF HATTIESBURG							
	073570 - MASS TRANSIT-TRANSPORTATION		EXPENDITURE REPORT							
			1 Months Ending 10/31/12							
THIS MONTH			ANNUAL	OPEN PO	YTD	REMAINING	PERCENT		....PROJECTED....	
ACTUAL		OBJ/SUB	BUDGET	& CONTRACTS	ACTUAL	BALANCE	PLAN	ACTUAL	OVER/UNDER	%
8,521	**IMPROVEMENT OTHER TH**		**338,016**		**8,521**	**329,495**	**8%**	**3%**	**(235,764)**	**-70%**
	MACHINERY AND EQUIPMENT									
	OFFICE FURN/EQUIP.	7325								
	DATA PROCESSING EQUIP.	7327								
201	ARRA-DP EQUIP/SOFTWARE	7328	1,813		201	1,612	8%	11%	599	33%
	AGRICULTURAL EQUIPMENT	7335								
	COMMUNICATION EQUIPMEN	7355								
18,114	ARRA-COMMUNICATION EQU	7356	35,000		18,114	16,886	8%	52%	182,368	521%
	ARRA-GPS EQUIPMENT	7357	15,750			15,750	8%	0%	(15,750)	-100%
	MAJOR EQUIP. IMPROVEME	7390								
	OTHER EQUIPMENT	7399								
---			---	---	---	---	---	---	---	---
18,315	**MACHINERY AND EQUIPM**		**52,563**		**18,315**	**34,248**	**8%**	**35%**	**167,217**	**318%**
	VEHICLES									
	AUTOMOBILES	7400								
	BUSES	7410		36,119		(36,119)				
	ARRA-TROLLEYS	7415								
	SPECIAL TRUCKS	7450								
---			---	---	---	---	---	---	---	---
	VEHICLES			**36,119**		**(36,119)**				
---			---	---	---	---	---	---	---	---
26,836	**CAPITAL OUTLAY**		**422,579**	**36,119**	**26,836**	**359,624**	**8%**	**6%**	**(100,547)**	**-24%**
---			---	---	---	---	---	---	---	---
138,044	**EXPENDITURES**		**1,407,563**	**44,914**	**138,044**	**1,224,606**	**8%**	**10%**	**248,965**	**18%**

			CITY OF HATTIESBURG							
	075695 - W&S CONSTR.-CAPITAL PROJECTS		EXPENDITURE REPORT							
			1 Months Ending 10/31/12							
THIS MONTH			ANNUAL	OPEN PO	YTD	REMAINING	PERCENT		....PROJECTED....	
ACTUAL		OBJ/SUB	BUDGET	& CONTRACTS	ACTUAL	BALANCE	PLAN	ACTUAL	OVER/UNDER	%
	OPERATING SUPPLIES									
	ASPHALT & ASPHALT PROD	5400								
	OPERATING SUPPLIES									
	SUPPLIES AND EXPENSES									
	PROFESSIONAL SERVICES									
	ENGINEERING	6015	1,000,000			1,000,000	8%	0%	(1,000,000)	-100%
	LEGAL	6025								
	OTHER PROFESSIONAL SER	6049	50,000			50,000	8%	0%	(50,000)	-100%
	PROFESSIONAL SERVICE		**1,050,000**			**1,050,000**	**8%**	**0%**	**(1,050,000)**	**-100%**
	REPR/MAINT-OUTSIDE LABO									
	STREETS & STRUCTURES R	6360								
	REPR/MAINT-OUTSIDE L									
	OTHER SERVICES & CHARGE									
	SERVICES NOT SPECIFIED	6999								
	OTHER SERVICES & CHA									
	OTHER SERVICES & CHAR		**1,050,000**			**1,050,000**	**8%**	**0%**	**(1,050,000)**	**-100%**
	LAND									
	LAND	7000								
	EASEMENTS	7010								
	LAND									
	IMPROVEMENT OTHER THAN									
	FENCES/RAILINGS	7212								
	SEWERS	7220								
	IRENE CHAPEL-HATTIE A	7220 02								
	IND.PARK WTR/SWR IMPR	7220 03	143,750			143,750	8%	0%	(143,750)	-100%
	MISC.SEWER SYSTEMS IM	7220 04								

			CITY OF HATTIESBURG							
	075695 - W&S CONSTR.-CAPITAL PROJECTS		EXPENDITURE REPORT							
			1 Months Ending 10/31/12							
THIS MONTH			ANNUAL	OPEN PO	YTD	REMAINING	PERCENT		....PROJECTED....	
ACTUAL		OBJ/SUB	BUDGET	& CONTRACTS	ACTUAL	BALANCE	PLAN	ACTUAL	OVER/UNDER	%
	SHADOWOOD	7220 05								
	WOODHAVEN	7220 06								
	RICHBURG HILL TO I/59	7220 07								
	HWY 49 S	7220 08								
	W.HILLS GOLF CRSE SWR	7220 09								
	PCS WTR/SWR LINES	7220 10								
138,807	S.LAGOON IMPROVEMENTS	7220 11	600,000		138,807	461,193	8%	23%	1,065,684	178%
	COUNTRY CLUB SEWER	7220 13								
	HYBRID PLASTICS PROJ(	7220 14								
	PALMER'S SWR-SRF-LOAN	7220 15								
	CENTRAL SCHL RD	7220 16								
	JAMES/HWY49 SRF LOAN#	7220 18								
	I-59/JERVIS MIMS	7220 19								
	DIXIE PINE-SRF LOAN #	7220 20								
	USM PUMP STATION	7220 21								
	N.LAGOON EXPANSION	7220 26								
	S.LAGOON REPAIRS	7220 27								
	HWY 11 SOUTH SEWER	7220 29								
	USA YEAST	7220 37								
	S2-W 592 SWR W OF RAI	7220 38								
	S3-E 592 SWR E OF RAI	7220 39								
721	CDBG-WIS PAK	7220 46	269,403		721	268,682	8%	0%	(260,751)	-97%
	LAGOON AERATORS-ARRA	7220 47								
	RAILROAD BORE	7220 48								
6,661	CDBG-USA YEAST	7220 51	7,037,400		6,661	7,030,739	8%	0%	(6,957,468)	-99%
	PROGRAMMED SEWER PROJ	7220 99	200,000			200,000	8%	0%	(200,000)	-100%
---			---	---	---	---	---	---	---	---
146,189	**SEWERS**		**8,250,553**		**146,189**	**8,104,364**	**8%**	**2%**	**(6,496,285)**	**-79%**
	STREETS & ROADWAYS	7230								
	1995 W&S-PAVING	7230 01								
---			---	---	---	---	---	---	---	---
	STREETS & ROADWAYS									
	WATER SYSTEMS	7245								
	JAMES ST WTR PLT	7245 02	90,000			90,000	8%	0%	(90,000)	-100%
	HWY 98 WEST WTR.IMPR.	7245 03								
	WESTERN CONTAINER FIR	7245 06								
	RICHBURG HILL TO I/59	7245 07								

			CITY OF HATTIESBURG							
	075695 - W&S CONSTR.-CAPITAL PROJECTS		EXPENDITURE REPORT							
			1 Months Ending 10/31/12							
THIS MONTH			ANNUAL	OPEN PO	YTD	REMAINING	PERCENT		....PROJECTED....	
ACTUAL		OBJ/SUB	BUDGET	& CONTRACTS	ACTUAL	BALANCE	PLAN	ACTUAL	OVER/UNDER	%
	RICHBURG HILL WTR.LIN	7245 14								
	RICHBURG HILL BOOSTER	7245 17								
	COUNTRY CLUB WATER	7245 18								
	RICHBURG ELEVATED TAN	7245 19								
	RAULSTON RD WATER	7245 20								
	BLC MUN.AIRPORT	7245 21								
	JMT IND.DR/JAMES ST	7245 22								
	TATUM BLVD/HWY 11	7245 23								
	CDBG-WIS PAK	7245 46								
	PROGRAMMED WATER PROJ	7245 99	200,000			200,000	8%	0%	(200,000)	-100%
---			---	---	---	---	---	---	---	---
	WATER SYSTEMS		**290,000**			**290,000**	**8%**	**0%**	**(290,000)**	**-100%**
	OTHER IMPROVEMENTS	7295								
	SCS PROJECT MATCH	7295 20								
	NRCS EROSION CONTROL	7295 21								
	TURTLECREEK-STORM DRA	7295 26								
	TURTLECREEK-WATER/SEW	7295 27								
	TANK PAINTING/MAINT	7295 98	150,000			150,000	8%	0%	(150,000)	-100%
---			---	---	---	---	---	---	---	---
	OTHER IMPROVEMENTS		**150,000**			**150,000**	**8%**	**0%**	**(150,000)**	**-100%**
---			---	---	---	---	---	---	---	---
146,189	**IMPROVEMENT OTHER TH**		**8,690,553**		**146,189**	**8,544,364**	**8%**	**2%**	**(6,936,285)**	**-80%**
	MACHINERY AND EQUIPMENT									
	OFFICE FURN/EQUIP.	7325								
	PIPE	7370								
	OTHER EQUIPMENT	7399								
---			---	---	---	---	---	---	---	---
	MACHINERY AND EQUIPM									
---			---	---	---	---	---	---	---	---
146,189	**CAPITAL OUTLAY**		**8,690,553**		**146,189**	**8,544,364**	**8%**	**2%**	**(6,936,285)**	**-80%**
---			---	---	---	---	---	---	---	---
146,189	**EXPENDITURES**		**9,740,553**		**146,189**	**9,594,364**	**8%**	**2%**	**(7,986,285)**	**-82%**

			CITY OF HATTIESBURG							
	077650 - COMMUNITY CTR-ADMIN/GENERAL		EXPENDITURE REPORT							
			1 Months Ending 10/31/12							
THIS MONTH			ANNUAL	OPEN PO	YTD	REMAINING	PERCENT		....PROJECTED....	
ACTUAL		OBJ/SUB	BUDGET	& CONTRACTS	ACTUAL	BALANCE	PLAN	ACTUAL	OVER/UNDER	%
	SALARIES									
24,140	REGULAR WAGES	4000	328,189		24,140	304,049	8%	7%	(38,509)	-12%
	DISASTER RECOVERY WAGE	4010								
1,729	OVERTIME	4300	15,000		1,729	13,271	8%	12%	5,748	38%
	DISASTER RECOVERY OVER	4310								
---			---	---	---	---	---	---	---	---
25,869	**SALARIES**		**343,189**		**25,869**	**317,320**	**8%**	**8%**	**(32,761)**	**-10%**
	EMPLOYEE BENEFITS									
3,689	STATE RETIREMENT	4600	48,945		3,689	45,256	8%	8%	(4,677)	-10%
1,946	F.I.C.A. TAXES	4700	26,255		1,946	24,309	8%	7%	(2,903)	-11%
5,044	HOSPITALIZATION INS.	4800	73,080		5,044	68,036	8%	7%	(12,552)	-17%
	UNEMPLOYMENT BENEFITS	4900	3,000			3,000	8%	0%	(3,000)	-100%
	WORKMAN'S COMPENSATION	4910	11,845			11,845	8%	0%	(11,845)	-100%
---			---	---	---	---	---	---	---	---
10,679	**EMPLOYEE BENEFITS**		**163,125**		**10,679**	**152,446**	**8%**	**7%**	**(34,977)**	**-21%**
---			---	---	---	---	---	---	---	---
36,547	**PERSONAL SERVICES**		**506,314**		**36,547**	**469,767**	**8%**	**7%**	**(67,750)**	**-13%**
	OFFICE SUPPLIES									
	PAPER	5003								
	PRINTED FORMS	5005								
	OTHER EXPENDABLE OFF.S	5010	1,000			1,000	8%	0%	(1,000)	-100%
	MINOR OFFICE EQUIP/FUR	5020	1,000			1,000	8%	0%	(1,000)	-100%
	PHOTO SUPPLIES	5040								
	SUBSCRIPTIONS,MAGS,MAP	5050								
	BOOKS	5070								
---			---	---	---	---	---	---	---	---
	OFFICE SUPPLIES		**2,000**			**2,000**	**8%**	**0%**	**(2,000)**	**-100%**
	OPERATING SUPPLIES									
	CLEANING/JANITORIAL SP	5100	13,000	1,078		11,922	8%	0%	(13,000)	-100%
	HOUSEHOLD SUPPLIES	5110								
	FOOD	5115								
	MEDICAL SUPPLIES	5120	250			250	8%	0%	(250)	-100%
	CHEMICALS	5130								
260	GAS AND OIL	5250	11,200		260	10,940	8%	2%	(8,080)	-72%

			CITY OF HATTIESBURG							
	077650 - COMMUNITY CTR-ADMIN/GENERAL		EXPENDITURE REPORT							
			1 Months Ending 10/31/12							
THIS MONTH			ANNUAL	OPEN PO	YTD	REMAINING	PERCENT		....PROJECTED....	
ACTUAL		OBJ/SUB	BUDGET	& CONTRACTS	ACTUAL	BALANCE	PLAN	ACTUAL	OVER/UNDER	%
	WEARING APPAREL	5355	500			500	8%	0%	(500)	-100%
813	HORT./LANDSCAPING SPLY	5440	2,500		813	1,688	8%	33%	7,256	290%
	HAND TOOLS	5450								
	MINOR EQUIPMENT	5460	19,000	424		18,576	8%	0%	(19,000)	-100%
	MDSE FOR RESALE	5520								
128	OTHER OPERATING MATL/S	5590	1,750		128	1,622	8%	7%	(214)	-12%
---			---	---	---	---	---	---	---	---
1,200	**OPERATING SUPPLIES**		**48,200**	**1,502**	**1,200**	**45,498**	**8%**	**2%**	**(33,800)**	**-70%**
	REPAIR & MAINTENANCE SP									
115	BUILDING MATERIALS & S	5600	3,000		115	2,885	8%	4%	(1,620)	-54%
219	ELECTRICAL SUPPLIES	5605	5,000	475	219	4,307	8%	4%	(2,372)	-47%
	PLUMBING SUPPLIES	5610	3,000			3,000	8%	0%	(3,000)	-100%
	PAINT AND PAINTING SPL	5650	3,000			3,000	8%	0%	(3,000)	-100%
120	MTR VEHICLE REP. PTS/S	5700	2,000		120	1,880	8%	6%	(560)	-28%
	OTHER REPAIR/MAINT. SP	5990	1,700	36		1,664	8%	0%	(1,700)	-100%
---			---	---	---	---	---	---	---	---
454	**REPAIR & MAINTENANCE**		**17,700**	**511**	**454**	**16,736**	**8%**	**3%**	**(12,252)**	**-69%**
---			---	---	---	---	---	---	---	---
1,654	**SUPPLIES AND EXPENSES**		**67,900**	**2,013**	**1,654**	**64,234**	**8%**	**2%**	**(48,052)**	**-71%**
	_____									
	PROFESSIONAL SERVICES									
	ENTERTAINMENT	6033								
	OTHER PROFESSIONAL SER	6049	2,000	8,400		(6,400)	8%	0%	(2,000)	-100%
---			---	---	---	---	---	---	---	---
	PROFESSIONAL SERVICE		**2,000**	**8,400**		**(6,400)**	**8%**	**0%**	**(2,000)**	**-100%**
	COMMUNICATIONS									
50	TELEPHONE AND TELEGRAP	6060	1,500		50	1,450	8%	3%	(900)	-60%
	POSTAGE	6070								
---			---	---	---	---	---	---	---	---
50	**COMMUNICATIONS**		**1,500**		**50**	**1,450**	**8%**	**3%**	**(900)**	**-60%**
	TRANSPORTATION									
	TRAVEL EXPENSE	6110	500			500	8%	0%	(500)	-100%
	FREIGHT	6120	100			100	8%	0%	(100)	-100%
---			---	---	---	---	---	---	---	---
	TRANSPORTATION		**600**			**600**	**8%**	**0%**	**(600)**	**-100%**
	ADVERTISING									
	ADVERTISING	6150								

CITY OF HATTIESBURG
077650 - COMMUNITY CTR-ADMIN/GENERAL
EXPENDITURE REPORT
1 Months Ending 10/31/12

THIS MONTH ACTUAL		OBJ/SUB	ANNUAL BUDGET	OPEN PO & CONTRACTS	YTD ACTUAL	REMAINING BALANCE	PERCENT PLAN	PERCENT ACTUAL	....PROJECTED.... OVER/UNDER	%
	ADVERTISING									
	PRINTING AND BINDING									
	PRINTING	6200								
	FILM PROCESSING	6240								
	PRINTING AND BINDING									
	INSURANCE									
	BOILER MACHINERY	6260								
	AUTOMOBILE INSURANCE	6265								
	INSURANCE									
	UTILITIES									
172	GAS	6300	25,000		172	24,828	8%	1%	(22,936)	-92%
6,948	ELECTRICITY	6305	84,000		6,948	77,052	8%	8%	(624)	-1%
7,121	**UTILITIES**		**109,000**		**7,121**	**101,879**	**8%**	**7%**	**(23,548)**	**-22%**
	REPR/MAINT-OUTSIDE LABO									
	BUILDING R&M	6350	73,000			73,000	8%	0%	(73,000)	-100%
	ELECTRICAL R&M	6355	500			500	8%	0%	(500)	-100%
	PLUMBING EQUIPMENT R&M	6357	2,000			2,000	8%	0%	(2,000)	-100%
	OFFICE EQUIPMENT R&M	6365								
	HOUSEHOLD EQUIPMENT R&	6370	5,000			5,000	8%	0%	(5,000)	-100%
218	FIXED EQUIPMENT R&M	6380	17,700	12,292	218	5,190	8%	1%	(15,084)	-85%
	MINOR EQUIPMENT R&M	6382	600			600	8%	0%	(600)	-100%
	MOTOR VEHICLE EQ. R&M	6384	4,000			4,000	8%	0%	(4,000)	-100%
	CLEANING AND PAINTING	6392	30,000			30,000	8%	0%	(30,000)	-100%
	DISINFECT./EXTERMINATI	6394	3,500			3,500	8%	0%	(3,500)	-100%
	TOW IN CHARGES	6398	250			250	8%	0%	(250)	-100%
	OTHER REPAIRS AND MAIN	6399	4,000	1,988		2,013	8%	0%	(4,000)	-100%
218	**REPR/MAINT-OUTSIDE L**		**140,550**	**14,280**	**218**	**126,052**	**8%**	**0%**	**(137,934)**	**-98%**
	RENTALS									
	OFFICE EQUIPMENT RENT	6410								
	CYLINDER RENT	6425								
176	UNIFORM RENT	6430	3,000		176	2,824	8%	6%	(888)	-30%
	MOP-MAT-RAG RENT	6435								

CITY OF HATTIESBURG
077650 - COMMUNITY CTR-ADMIN/GENERAL
EXPENDITURE REPORT
1 Months Ending 10/31/12

THIS MONTH ACTUAL		OBJ/SUB	ANNUAL BUDGET	OPEN PO & CONTRACTS	YTD ACTUAL	REMAINING BALANCE	PERCENT PLAN	PERCENT ACTUAL	....PROJECTED.... OVER/UNDER	%
	OTHER RENT	6449	1,500			1,500	8%	0%	(1,500)	-100%
---			---	---	---	---	---	---	---	---
176	**RENTALS**		**4,500**		**176**	**4,324**	**8%**	**4%**	**(2,388)**	**-53%**
	OTHER SERVICES & CHARGE									
	DUES AND MEMBERSHIPS	6840								
	REGISTRATION FEE/TUITI	6845	1,000			1,000	8%	0%	(1,000)	-100%
	PAYMENTS-TOURING EVENT	6997								
	SPECIAL EVENTS EXPENDI	6998								
585	SERVICES NOT SPECIFIED	6999	4,000		585	3,415	8%	15%	3,020	76%
---			---	---	---	---	---	---	---	---
585	**OTHER SERVICES & CHA**		**5,000**		**585**	**4,415**	**8%**	**12%**	**2,020**	**40%**
---			---	---	---	---	---	---	---	---
8,150	**OTHER SERVICES & CHAR**		**263,150**	**22,680**	**8,150**	**232,321**	**8%**	**3%**	**(165,350)**	**-63%**
	_____									
	BUILDING/BLD IMPROVEMEN									
	BUILDING IMPROVEMENTS	7150								
	REC.CENTER (OLD YMCA)	7150 10								
	CULTURAL CTR	7150 14								
	JDS COMM CTR	7150 19	155,000			155,000	8%	0%	(155,000)	-100%
	SIGLER CENTER	7150 20								
	CE ROY/5TH ST	7150 21								
---			---	---	---	---	---	---	---	---
	BUILDING IMPROVEMEN		**155,000**			**155,000**	**8%**	**0%**	**(155,000)**	**-100%**
---			---	---	---	---	---	---	---	---
	BUILDING/BLD IMPROVE		**155,000**			**155,000**	**8%**	**0%**	**(155,000)**	**-100%**
	IMPROVEMENT OTHER THAN									
	OTHER IMPROVEMENTS	7295	28,500			28,500	8%	0%	(28,500)	-100%
---			---	---	---	---	---	---	---	---
	IMPROVEMENT OTHER TH		**28,500**			**28,500**	**8%**	**0%**	**(28,500)**	**-100%**
	MACHINERY AND EQUIPMENT									
	HOUSEHOLD FURN/EQUIP.	7320								
	OFFICE FURN/EQUIP.	7325								
	COMMUNICATION EQUIPMEN	7355								
	OTHER EQUIPMENT	7399								
---			---	---	---	---	---	---	---	---
	MACHINERY AND EQUIPM									
	VEHICLES									

			CITY OF HATTIESBURG							
	077650 - COMMUNITY CTR-ADMIN/GENERAL		EXPENDITURE REPORT							
			1 Months Ending 10/31/12							
THIS MONTH			ANNUAL	OPEN PO	YTD	REMAINING	PERCENT		....PROJECTED....	
ACTUAL		OBJ/SUB	BUDGET	& CONTRACTS	ACTUAL	BALANCE	PLAN	ACTUAL	OVER/UNDER	%
	AUTOMOBILES	7400								
	PICK UP TRUCKS	7420								
---			---	---	---	---	---	---	---	---
	VEHICLES									
---			---	---	---	---	---	---	---	---
	CAPITAL OUTLAY		**183,500**			**183,500**	**8%**	**0%**	**(183,500)**	**-100%**
---			---	---	---	---	---	---	---	---
46,351	**EXPENDITURES**		**1,020,864**	**24,693**	**46,351**	**949,822**	**8%**	**5%**	**(464,652)**	**-46%**

			CITY OF HATTIESBURG							
	078635 - '09 WATER METER PROJ-CIP		EXPENDITURE REPORT							
			1 Months Ending 10/31/12							
THIS MONTH			ANNUAL	OPEN PO	YTD	REMAINING	PERCENT		....PROJECTED....	
ACTUAL		OBJ/SUB	BUDGET	& CONTRACTS	ACTUAL	BALANCE	PLAN	ACTUAL	OVER/UNDER	%
	OPERATING SUPPLIES									
	ASPHALT & ASPHALT PROD	5400								
	CONCRETE, CEMENT, ETC.	5405								
	BRICK,STONE,MORTAR,ETC	5410								
	DRAINAGE PIPE & CULVER	5420								
	OTHER OPERATING MATL/S	5590								
---			---	---	---	---	---	---	---	---
	OPERATING SUPPLIES									
---			---	---	---	---	---	---	---	---
	SUPPLIES AND EXPENSES									
	PROFESSIONAL SERVICES									
	ENGINEERING	6015								
	CONSULTANT SERV/SURVEY	6020								
	LEGAL	6025								
	OTHER PROFESSIONAL SER	6049	100,000	38,150		61,850	8%	0%	(100,000)	-100%
---			---	---	---	---	---	---	---	---
	PROFESSIONAL SERVICE		**100,000**	**38,150**		**61,850**	**8%**	**0%**	**(100,000)**	**-100%**
---			---	---	---	---	---	---	---	---
	OTHER SERVICES & CHAR		**100,000**	**38,150**		**61,850**	**8%**	**0%**	**(100,000)**	**-100%**
	BUILDING/BLD IMPROVEMEN									
	BUILDING IMPROVEMENTS	7150								
	FUTURE PROJECT	7150 18								
---			---	---	---	---	---	---	---	---
	BUILDING IMPROVEMEN									
---			---	---	---	---	---	---	---	---
	BUILDING/BLD IMPROVE									
	MACHINERY AND EQUIPMENT									
	WATER UTILITY SOFTWARE	7329								
	HYDRANTS & METERS	7365	100,000			100,000	8%	0%	(100,000)	-100%
---			---	---	---	---	---	---	---	---
	MACHINERY AND EQUIPM		**100,000**			**100,000**	**8%**	**0%**	**(100,000)**	**-100%**
---			---	---	---	---	---	---	---	---
	CAPITAL OUTLAY		**100,000**			**100,000**	**8%**	**0%**	**(100,000)**	**-100%**

			CITY OF HATTIESBURG							
	078635 - '09 WATER METER PROJ-CIP		EXPENDITURE REPORT							
			1 Months Ending 10/31/12							
THIS MONTH			ANNUAL	OPEN PO	YTD	REMAINING	PERCENT		....PROJECTED....	
ACTUAL		OBJ/SUB	BUDGET	& CONTRACTS	ACTUAL	BALANCE	PLAN	ACTUAL	OVER/UNDER	%
----------			---------	---------	---------	---------	-----	-----	--------	-----
	EXPENDITURES		**200,000**	**38,150**		**161,850**	**8%**	**0%**	**(200,000)**	**-100%**

			CITY OF HATTIESBURG							
	082285 - CDBG-ENTITLEMENTS		EXPENDITURE REPORT							
			1 Months Ending 10/31/12							
THIS MONTH			ANNUAL	OPEN PO	YTD	REMAINING	PERCENT		....PROJECTED....	
ACTUAL		OBJ/SUB	BUDGET	& CONTRACTS	ACTUAL	BALANCE	PLAN	ACTUAL	OVER/UNDER	%
	SALARIES									
9,940	REGULAR WAGES	4000	165,048		9,940	155,108	8%	6%	(45,768)	-28%
	OVERTIME	4300								
---			---	---	---	---	---	---	---	---
9,940	**SALARIES**		**165,048**		**9,940**	**155,108**	**8%**	**6%**	**(45,768)**	**-28%**
	EMPLOYEE BENEFITS									
1,417	STATE RETIREMENT	4600	23,545		1,417	22,128	8%	6%	(6,541)	-28%
748	F.I.C.A. TAXES	4700	12,630		748	11,882	8%	6%	(3,654)	-29%
1,552	HOSPITALIZATION INS.	4800	26,100		1,552	24,548	8%	6%	(7,476)	-29%
	UNEMPLOYMENT BENEFITS	4900								
	WORKMAN'S COMPENSATION	4910	2,266			2,266	8%	0%	(2,266)	-100%
---			---	---	---	---	---	---	---	---
3,718	**EMPLOYEE BENEFITS**		**64,541**		**3,718**	**60,823**	**8%**	**6%**	**(19,925)**	**-31%**
---			---	---	---	---	---	---	---	---
13,658	**PERSONAL SERVICES**		**229,589**		**13,658**	**215,931**	**8%**	**6%**	**(65,693)**	**-29%**
	OFFICE SUPPLIES									
	PAPER	5003	700			700	8%	0%	(700)	-100%
	PRINTED FORMS	5005								
(8)	OTHER EXPENDABLE OFF.S	5010	2,000	245	8-	1,762	8%	0%	(1,904)	-95%
(40)	MINOR OFFICE EQUIP/FUR	5020			40-	40			480	
	PHOTO SUPPLIES	5040								
	SUBSCRIPTIONS,MAGS,MAP	5050								
	BOOKS	5070								
	COMPUTER SUPPLIES	5080								
---			---	---	---	---	---	---	---	---
(48)	**OFFICE SUPPLIES**		**2,700**	**245**	**48-**	**2,502**	**8%**	**2%**	**(2,124)**	**-79%**
	OPERATING SUPPLIES									
	FOOD	5115								
44	GAS AND OIL	5250	2,500		44	2,456	8%	2%	(1,972)	-79%
	LUBRICANTS	5255								
	MINOR EQUIPMENT	5460	1,700			1,700	8%	0%	(1,700)	-100%
	OTHER OPERATING MATL/S	5590	300			300	8%	0%	(300)	-100%
	OTHER OPER.MATLS-FULL	5591								
	OTHER OPER.MATLS-EMER	5592								

			CITY OF HATTIESBURG							
	082285 - CDBG-ENTITLEMENTS		EXPENDITURE REPORT							
			1 Months Ending 10/31/12							
THIS MONTH			ANNUAL	OPEN PO	YTD	REMAINING	PERCENT		....PROJECTED....	
ACTUAL		OBJ/SUB	BUDGET	& CONTRACTS	ACTUAL	BALANCE	PLAN	ACTUAL	OVER/UNDER	%
---			---	---	---	---	---	---	---	---
44	**OPERATING SUPPLIES**		**4,500**		**44**	**4,456**	**8%**	**1%**	**(3,972)**	**-88%**
	REPAIR & MAINTENANCE SP									
	BUILDING MATERIALS & S	5600								
	PAINT AND PAINTING SPL	5650								
	MTR VEHICLE REP. PTS/S	5700	700			700	8%	0%	(700)	-100%
	MINOR COMPUTER EQUIP.	5800								
---			---	---	---	---	---	---	---	---
	REPAIR & MAINTENANCE		**700**			**700**	**8%**	**0%**	**(700)**	**-100%**
---			---	---	---	---	---	---	---	---
(4)	**SUPPLIES AND EXPENSES**		**7,900**	**245**	**4-**	**7,658**	**8%**	**0%**	**(7,852)**	**-99%**
	_____									
	PROFESSIONAL SERVICES									
	AUDITING AND ACCOUNTIN	6010								
	DEMO/RELATED SER 2008-	6013								
	DEMOLITION-TARGET ARE	6013 01	69,236	3,000		66,236	8%	0%	(69,236)	-100%
	ASBESTOS REMOVAL-TARG	6013 02								
	LOT CLEARING-TARGET A	6013 03								
---			---	---	---	---	---	---	---	---
	DEMO/RELATED SER 20		**69,236**	**3,000**		**66,236**	**8%**	**0%**	**(69,236)**	**-100%**
	CONSULTANT SERV/SURVEY	6020								
	OTHER PROFESSIONAL SER	6049								
33,535	COMM.HOUSING DEV. ORG	6049 03	299,319		33,535	265,784	8%	11%	103,101	34%
	DOWNTOWN LIGHTING	6049 04								
	RECORDING FEES	6049 06	100			100	8%	0%	(100)	-100%
	ADP LOAN PROGRAM	6049 07								
	ENVIRONMENTAL STUDY	6049 08	3,000			3,000	8%	0%	(3,000)	-100%
	CAPITAL IMPROVEMENT P	6049 09								
8,963	PUB.SERV.GRANT EXPENS	6049 10	65,000	1,578	8,963	54,459	8%	14%	42,556	65%
	NEIGHBORHOOD GRANT EX	6049 11								
	ENGR-DRAINAGE CDBG	6049 12								
	DEMOLITION 1999-2007	6049 13								
	FACADE IMPR.PROGRAM	6049 14	45,000			45,000	8%	0%	(45,000)	-100%
	PLANNING	6049 15								
	HABITAT PROGRAM	6049 16								
	PRVO EXPENDITURE	6049 17								
	EATON SCHOOL	6049 18								

			CITY OF HATTIESBURG							
	082285 - CDBG-ENTITLEMENTS		EXPENDITURE REPORT							
			1 Months Ending 10/31/12							
THIS MONTH			ANNUAL	OPEN PO	YTD	REMAINING	PERCENT		....PROJECTED....	
ACTUAL		OBJ/SUB	BUDGET	& CONTRACTS	ACTUAL	BALANCE	PLAN	ACTUAL	OVER/UNDER	%
	HOME BUYERS' EDUCATIO	6049 19								
	EARLY WARNING ALERT P	6049 20								
650	RELOCATION	6049 21	30,000	650	650	28,700	8%	2%	(22,200)	-74%
	LEAD TESTING/ABATEMEN	6049 22	30,000			30,000	8%	0%	(30,000)	-100%
	ASBESTOS TESTING/ABAT	6049 23	10,000			10,000	8%	0%	(10,000)	-100%
	OTHER	6049 99								
---			---	---	---	---	---	---	---	---
43,148	**OTHER PROFESSIONAL**		**482,419**	**2,228**	**43,148**	**437,043**	**8%**	**9%**	**35,357**	**7%**
---			---	---	---	---	---	---	---	---
43,148	**PROFESSIONAL SERVICE**		**551,655**	**5,228**	**43,148**	**503,279**	**8%**	**8%**	**(33,879)**	**-6%**
	COMMUNICATIONS									
32	TELEPHONE AND TELEGRAP	6060	450		32	418	8%	7%	(66)	-15%
---			---	---	---	---	---	---	---	---
32	**COMMUNICATIONS**		**450**		**32**	**418**	**8%**	**7%**	**(66)**	**-15%**
	TRANSPORTATION									
	TRAVEL EXPENSE	6110	7,000			7,000	8%	0%	(7,000)	-100%
	MESSENGER/EXPRESS SERV	6130	200			200	8%	0%	(200)	-100%
---			---	---	---	---	---	---	---	---
	TRANSPORTATION		**7,200**			**7,200**	**8%**	**0%**	**(7,200)**	**-100%**
	ADVERTISING									
133	ADVERTISING	6150	2,000		133	1,867	8%	7%	(404)	-20%
---			---	---	---	---	---	---	---	---
133	**ADVERTISING**		**2,000**		**133**	**1,867**	**8%**	**7%**	**(404)**	**-20%**
	PRINTING AND BINDING									
	PRINTING-GRANT RELATED	6202								
	FILM PROCESSING	6240	350			350	8%	0%	(350)	-100%
---			---	---	---	---	---	---	---	---
	PRINTING AND BINDING		**350**			**350**	**8%**	**0%**	**(350)**	**-100%**
	REPR/MAINT-OUTSIDE LABO									
	OFFICE EQUIPMENT R&M	6365	1,000			1,000	8%	0%	(1,000)	-100%
	MOTOR VEHICLE EQ. R&M	6384	500			500	8%	0%	(500)	-100%
---			---	---	---	---	---	---	---	---
	REPR/MAINT-OUTSIDE L		**1,500**			**1,500**	**8%**	**0%**	**(1,500)**	**-100%**
	RENTALS									
	OFFICE EQUIPMENT RENT	6410								
	OTHER RENT	6449								
---			---	---	---	---	---	---	---	---

			CITY OF HATTIESBURG							
	082285 - CDBG-ENTITLEMENTS		EXPENDITURE REPORT							
			1 Months Ending 10/31/12							
THIS MONTH			ANNUAL	OPEN PO	YTD	REMAINING	PERCENT		....PROJECTED....	
ACTUAL		OBJ/SUB	BUDGET	& CONTRACTS	ACTUAL	BALANCE	PLAN	ACTUAL	OVER/UNDER	%
	RENTALS									
	OTHER SERVICES & CHARGE									
	BANK SERV/TRF FEE	6832								
25	DUES AND MEMBERSHIPS	6840	600		25	575	8%	4%	(300)	-50%
	REGISTRATION FEE/TUITI	6845	1,000			1,000	8%	0%	(1,000)	-100%
	SERVICES NOT SPECIFIED	6999								
---			---	---	---	---	---	---	---	---
25	**OTHER SERVICES & CHA**		**1,600**		**25**	**1,575**	**8%**	**2%**	**(1,300)**	**-81%**
---			---	---	---	---	---	---	---	---
43,337	**OTHER SERVICES & CHAR**		**564,755**	**5,228**	**43,337**	**516,189**	**8%**	**8%**	**(44,711)**	**-8%**
	IMPROVEMENT OTHER THAN									
	DRAINS	7215								
	FACILITIES IMPROVEMEN	7215 01	52,986			52,986	8%	0%	(52,986)	-100%
	ARLEDGE STREET	7215 06								
	E TIPTON DRAINAGE PRO	7215 16								
	HALL-ALCORN	7215 18								
	EAST CENTRAL	7215 19								
	WALNUT STREET	7215 20								
	HALL AVENUE PHASE III	7215 21								
	MOBILE/BOUIE - PHASE	7215 22								
	KATIE/J HALL - PHASE	7215 23								
	EAST CENTRAL - PHASE	7215 24								
	WALNUT STREET - PHASE	7215 25								
	OLD AIRPORT RD	7215 32								
	DIXIE PINE	7215 33								
	CELESTE PLACE	7215 34								
	OTHER DRAINAGE PROJEC	7215 99	50,000			50,000	8%	0%	(50,000)	-100%
---			---	---	---	---	---	---	---	---
	DRAINS		**102,986**			**102,986**	**8%**	**0%**	**(102,986)**	**-100%**
	SEWERS	7220								
	ARRA SIDEWALKS (WOODLE	7225	20,364			20,364	8%	0%	(20,364)	-100%
	STREETS & ROADWAYS	7230								
	TUSCAN AVENUE TO BERN	7230 35								
	OTHER STREET IMPR.	7230 99								
---			---	---	---	---	---	---	---	---
	STREETS & ROADWAYS									

CITY OF HATTIESBURG
082285 - CDBG-ENTITLEMENTS
EXPENDITURE REPORT
1 Months Ending 10/31/12

THIS MONTH ACTUAL		OBJ/SUB	ANNUAL BUDGET	OPEN PO & CONTRACTS	YTD ACTUAL	REMAINING BALANCE	PERCENT PLAN	PERCENT ACTUAL	....PROJECTED.... OVER/UNDER	%
	CDBG/HOME HOUSING	7254								
	CDBG FULL REHAB	7254 01	269,866			269,866	8%	0%	(269,866)	-100%
9,930	CDBG HOUSING REPR	7254 02	105,297	9,930	9,930	85,437	8%	9%	13,863	13%
24,000	HOME FULL REHAB	7254 03	467,189		24,000	443,189	8%	5%	(179,189)	-38%
	HOME DOWNPAYMENT ASST	7254 04	60,000			60,000	8%	0%	(60,000)	-100%
	AFFORDABLE HOUSING	7254 05								
	HOME REVOLVING LOANS	7254 06								
	WORLD CHANGERS	7254 07								
	ADOPT A HOME	7254 08								
1,600	RECONSTRUCTION	7254 09	22,941	1,600	1,600	19,741	8%	7%	(3,741)	-16%
	RECONSTRUCTN/SALV.ARM	7254 10								
1,212	BLUE ROOFS	7254 11	72,181		1,212	70,969	8%	2%	(57,637)	-80%
	EATON SCHOOL	7254 12								
4,180	MICROENTERPRISE PROGR	7254 13	51,000	615	4,180	46,205	8%	8%	(840)	-2%
---			---	---	---	---	---	---	---	---
40,922	**CDBG/HOME HOUSING**		**1,048,474**	**12,145**	**40,922**	**995,407**	**8%**	**4%**	**(557,410)**	**-53%**
	CDBG-ENTITLEMT ASSISTA	7285								
	HOME ENTITLEMT ASSISTA	7286								
	MDA AM DREAM D/P (ADDI	7287								
	OTHER IMPROVEMENTS	7295								
---			---	---	---	---	---	---	---	---
40,922	**IMPROVEMENT OTHER TH**		**1,171,824**	**12,145**	**40,922**	**1,118,757**	**8%**	**3%**	**(680,760)**	**-58%**
	MACHINERY AND EQUIPMENT									
	OFFICE FURN/EQUIP.	7325								
	DATA PROCESSING EQUIP.	7327								
---			---	---	---	---	---	---	---	---
	MACHINERY AND EQUIPM									
	VEHICLES									
	AUTOMOBILES	7400								
	PICK UP TRUCKS	7420								
---			---	---	---	---	---	---	---	---
	VEHICLES									
---			---	---	---	---	---	---	---	---
40,922	**CAPITAL OUTLAY**		**1,171,824**	**12,145**	**40,922**	**1,118,757**	**8%**	**3%**	**(680,760)**	**-58%**
---			---	---	---	---	---	---	---	---
97,914	**EXPENDITURES**		**1,974,068**	**17,618**	**97,914**	**1,858,536**	**8%**	**5%**	**(799,100)**	**-40%**

			CITY OF HATTIESBURG							
	082500 - CDBG-TRANSFERS		EXPENDITURE REPORT							
			1 Months Ending 10/31/12							
THIS MONTH			ANNUAL	OPEN PO	YTD	REMAINING	PERCENT		....PROJECTED....	
ACTUAL		OBJ/SUB	BUDGET	& CONTRACTS	ACTUAL	BALANCE	PLAN	ACTUAL	OVER/UNDER	%
	_____									
	_____									
	TRANSFERS TO OTHER FUND									
	T/T GENERAL FUND	9000 O1								
	T/T W & S CONSTRUCTION	9000 75								
---			---	---	---	---	---	---	---	---
	TRANSFERS TO OTHER F									
---			---	---	---	---	---	---	---	---
	TRANSFERS									
---			---	---	---	---	---	---	---	---
	EXPENDITURES									

			CITY OF HATTIESBURG							
	087500 - INDUSTRIAL PK-TRANSFERS		EXPENDITURE REPORT							
			1 Months Ending 10/31/12							
THIS MONTH			ANNUAL	OPEN PO	YTD	REMAINING	PERCENT		....PROJECTED....	
ACTUAL		OBJ/SUB	BUDGET	& CONTRACTS	ACTUAL	BALANCE	PLAN	ACTUAL	OVER/UNDER	%
	_____									
	_____									
	TRANSFERS TO OTHER FUND									
	T/T GENERAL FUND	9000 01								
	T/T CITY B & I	9000 13								
	T/T CITY B&I (KOHLER)	9000 13K								
	T/T CITY B&I (SUNBEAM)	9000 13S								
	T/T MUN.ROAD & BRIDGE	9000 72								
	T/T W & S CONSTRUCTION	9000 75								
---			---	---	---	---	---	---	---	---
	TRANSFERS TO OTHER F									
---			---	---	---	---	---	---	---	---
	TRANSFERS									
---			---	---	---	---	---	---	---	---
	EXPENDITURES									

			CITY OF HATTIESBURG							
	087601 - INDUSTRIAL PK-G.O.ACQUISITIONS		EXPENDITURE REPORT							
			1 Months Ending 10/31/12							
THIS MONTH			ANNUAL	OPEN PO	YTD	REMAINING	PERCENT		....PROJECTED....	
ACTUAL		OBJ/SUB	BUDGET	& CONTRACTS	ACTUAL	BALANCE	PLAN	ACTUAL	OVER/UNDER	%
	OFFICE SUPPLIES									
	OTHER EXPENDABLE OFF.S	5010								
---			---	---	---	---	---	---	---	---
	OFFICE SUPPLIES									
	OPERATING SUPPLIES									
	ASPHALT & ASPHALT PROD	5400								
	MINOR EQUIPMENT	5460								
	OTHER OPERATING MATL/S	5590								
---			---	---	---	---	---	---	---	---
	OPERATING SUPPLIES									
---			---	---	---	---	---	---	---	---
	SUPPLIES AND EXPENSES									
	PROFESSIONAL SERVICES									
	ADMINISTRATIVE FEE	6005								
	AUDITING AND ACCOUNTIN	6010								
	ARCHITECTURAL	6012								
	ENGINEERING/ENVIRONMEN	6015								
	SITE PREPARATION	6016								
	APPRAISAL	6017								
	CONSULTANT SERV/SURVEY	6020								
	AREA DEV.PARTNERSHIP	6020 01								
	OTHER	6020 03								
	IND.PK.MASTER PLAN	6020 04								
---			---	---	---	---	---	---	---	---
	CONSULTANT SERV/SUR									
	LEGAL	6025								
	OTHER PROFESSIONAL SER	6049								
---			---	---	---	---	---	---	---	---
	PROFESSIONAL SERVICE									
	COMMUNICATIONS									
	TELEPHONE AND TELEGRAP	6060								
	POSTAGE	6070								
---			---	---	---	---	---	---	---	---
	COMMUNICATIONS									

			CITY OF HATTIESBURG							
	087601 - INDUSTRIAL PK-G.O.ACQUISITIONS		EXPENDITURE REPORT							
			1 Months Ending 10/31/12							
THIS MONTH			ANNUAL	OPEN PO	YTD	REMAINING	PERCENT		....PROJECTED....	
ACTUAL		OBJ/SUB	BUDGET	& CONTRACTS	ACTUAL	BALANCE	PLAN	ACTUAL	OVER/UNDER	%
	TRANSPORTATION									
	TRAVEL EXPENSE	6110								
	MESSENGER/EXPRESS SERV	6130								
---			---	---	---	---	---	---	---	---
	TRANSPORTATION									
	ADVERTISING									
	ADVERTISING	6150								
---			---	---	---	---	---	---	---	---
	ADVERTISING									
	PRINTING AND BINDING									
	PRINTING	6200								
---			---	---	---	---	---	---	---	---
	PRINTING AND BINDING									
	INSURANCE									
	FIRE & EXTENDED COVERA	6250								
	PUBLIC LIAB/PROPERTY D	6255								
	OTHER INSURANCE	6299								
---			---	---	---	---	---	---	---	---
	INSURANCE									
	UTILITIES									
	GAS	6300								
	ELECTRICITY	6305								
	WATER	6315								
---			---	---	---	---	---	---	---	---
	UTILITIES									
	REPR/MAINT-OUTSIDE LABO									
	BUILDING R&M	6350								
	SIGN PAINTING	6396								
	OTHER REPAIRS AND MAIN	6399								
---			---	---	---	---	---	---	---	---
	REPR/MAINT-OUTSIDE L									
	RENTALS									
	LAND RENT	6400								
---			---	---	---	---	---	---	---	---
	RENTALS									
	OTHER SERVICES & CHARGE									
	CONTRIBUTIONS	6820								

			CITY OF HATTIESBURG							
	087601 - INDUSTRIAL PK-G.O.ACQUISITIONS		EXPENDITURE REPORT							
			1 Months Ending 10/31/12							
THIS MONTH			ANNUAL	OPEN PO	YTD	REMAINING	PERCENT		....PROJECTED....	
ACTUAL		OBJ/SUB	BUDGET	& CONTRACTS	ACTUAL	BALANCE	PLAN	ACTUAL	OVER/UNDER	%
	FORREST CTY. REPAYMEN	6820 90								
---			---	---	---	---	---	---	---	---
	CONTRIBUTIONS									
	PROPERTY TAXES	6995								
	SERVICES NOT SPECIFIED	6999								
---			---	---	---	---	---	---	---	---
	OTHER SERVICES & CHA									
---			---	---	---	---	---	---	---	---
	OTHER SERVICES & CHAR									
	_____									
	LAND									
	LAND	7000								
	LEASEHOLDS	7020								
---			---	---	---	---	---	---	---	---
	LAND									
	BUILDING/BLD IMPROVEMEN									
	BUILDINGS	7100								
	TECHNOLOGY BLDG.	7100 11								
---			---	---	---	---	---	---	---	---
	BUILDINGS									
---			---	---	---	---	---	---	---	---
	BUILDING/BLD IMPROVE									
	IMPROVEMENT OTHER THAN									
	STREETS & ROADWAYS	7230								
	OTHER IMPROVEMENTS	7295								
	OWENS-ILLINOIS PROJEC	7295 35								
	USA YEAST RAIL SPUR	7295 36								
	KOHLER EXPANSION	7295 37								
---			---	---	---	---	---	---	---	---
	OTHER IMPROVEMENTS									
---			---	---	---	---	---	---	---	---
	IMPROVEMENT OTHER TH									
---			---	---	---	---	---	---	---	---
	CAPITAL OUTLAY									
	_____									
	BONDS REDEEMED									
	IND/ECON DEV ISSUES	8020								

			CITY OF HATTIESBURG							
	087601 - INDUSTRIAL PK-G.O.ACQUISITIONS		EXPENDITURE REPORT							
			1 Months Ending 10/31/12							
THIS MONTH			ANNUAL	OPEN PO	YTD	REMAINING	PERCENT		....PROJECTED....	
ACTUAL		OBJ/SUB	BUDGET	& CONTRACTS	ACTUAL	BALANCE	PLAN	ACTUAL	OVER/UNDER	%
---			---	---	---	---	---	---	---	---
	BONDS REDEEMED									
	NOTE PRINCIPAL									
	IND. PARK NOTE	8210								
---			---	---	---	---	---	---	---	---
	NOTE PRINCIPAL									
	INTEREST ON NOTES									
	OTHER NOTES	8335								
---			---	---	---	---	---	---	---	---
	INTEREST ON NOTES									
---			---	---	---	---	---	---	---	---
	DEBT SERVICE									
---			---	---	---	---	---	---	---	---
	EXPENDITURES									

			CITY OF HATTIESBURG							
	087630 - INDUSTRIAL PK-KOHLER PROJECT		EXPENDITURE REPORT							
			1 Months Ending 10/31/12							
THIS MONTH			ANNUAL	OPEN PO	YTD	REMAINING	PERCENT		....PROJECTED....	
ACTUAL		OBJ/SUB	BUDGET	& CONTRACTS	ACTUAL	BALANCE	PLAN	ACTUAL	OVER/UNDER	%
	_____									
	_____									
	PROFESSIONAL SERVICES									
	ENGINEERING	6015								
	LEGAL	6025								
	OTHER PROFESSIONAL SER	6049								
---			---	---	---	---	---	---	---	---
	PROFESSIONAL SERVICE									
---			---	---	---	---	---	---	---	---
	OTHER SERVICES & CHAR									
	_____									
	LAND									
	LAND	7000								
	SITE PREPARATION	7040								
	SITE IMPROVEMENT	7045								
---			---	---	---	---	---	---	---	---
	LAND									
	BUILDING/BLD IMPROVEMEN									
	BUILDINGS	7100								
	KOHLER BLDG. EXPANSIO	7100 21								
---			---	---	---	---	---	---	---	---
	BUILDINGS									
---			---	---	---	---	---	---	---	---
	BUILDING/BLD IMPROVE									
	IMPROVEMENT OTHER THAN									
	STREETS & ROADWAYS	7230								
	OTHER IMPROVEMENTS	7295								
---			---	---	---	---	---	---	---	---
	IMPROVEMENT OTHER TH									
---			---	---	---	---	---	---	---	---
	CAPITAL OUTLAY									
---			---	---	---	---	---	---	---	---
	EXPENDITURES									

			CITY OF HATTIESBURG							
	090500 - 2008 D/T LIGHTING-TRANSFERS		EXPENDITURE REPORT							
			1 Months Ending 10/31/12							
THIS MONTH			ANNUAL	OPEN PO	YTD	REMAINING	PERCENT		....PROJECTED....	
ACTUAL		OBJ/SUB	BUDGET	& CONTRACTS	ACTUAL	BALANCE	PLAN	ACTUAL	OVER/UNDER	%
	_____									
	_____									
	TRANSFERS TO OTHER FUND									
	T/T SPECIAL STREET	9000 08								
	T/T B&I CITY	9000 13								
	T/T 2003 TIF B&I-CHAUV	9000 22								
	T/T 2008 TIF B&I-LINCO	9000 24								
---			---	---	---	---	---	---	---	---
	TRANSFERS TO OTHER F									
---			---	---	---	---	---	---	---	---
	TRANSFERS									
---			---	---	---	---	---	---	---	---
	EXPENDITURES									

			CITY OF HATTIESBURG							
	090602 - 2008 D/T LIGHTING-ISSUE EXP		EXPENDITURE REPORT							
			1 Months Ending 10/31/12							
THIS MONTH			ANNUAL	OPEN PO	YTD	REMAINING	PERCENT		....PROJECTED....	
ACTUAL		OBJ/SUB	BUDGET	& CONTRACTS	ACTUAL	BALANCE	PLAN	ACTUAL	OVER/UNDER	%
	_____									
	_____									
	PROFESSIONAL SERVICES									
	LEGAL	6025								
	OTHER PROFESSIONAL SER	6049								
---			---	---	---	---	---	---	---	---
	PROFESSIONAL SERVICE									
	OTHER SERVICES & CHARGE									
	SERVICES NOT SPECIFIED	6999								
---			---	---	---	---	---	---	---	---
	OTHER SERVICES & CHA									
---			---	---	---	---	---	---	---	---
	OTHER SERVICES & CHAR									
---			---	---	---	---	---	---	---	---
	EXPENDITURES									

			CITY OF HATTIESBURG							
	090603 - 2008 D/T LIGHTING-PROJECT		EXPENDITURE REPORT							
			1 Months Ending 10/31/12							
THIS MONTH			ANNUAL	OPEN PO	YTD	REMAINING	PERCENT		....PROJECTED....	
ACTUAL		OBJ/SUB	BUDGET	& CONTRACTS	ACTUAL	BALANCE	PLAN	ACTUAL	OVER/UNDER	%
	_____									
	_____									
	IMPROVEMENT OTHER THAN									
	OTHER IMPROVEMENTS	7295								
	CHAUVET SQUARE/TIF PR	7295 33								
	LINCOLN CENTER/TIF PR	7295 38								
	D/T LIGHTING/GO NOTE	7295 51								
---			---	---	---	---	---	---	---	---
	OTHER IMPROVEMENTS									
---			---	---	---	---	---	---	---	---
	IMPROVEMENT OTHER TH									
---			---	---	---	---	---	---	---	---
	CAPITAL OUTLAY									
---			---	---	---	---	---	---	---	---
	EXPENDITURES									

			CITY OF HATTIESBURG							
	091500 - TIF CONST-TRANSFERS		EXPENDITURE REPORT							
			1 Months Ending 10/31/12							
THIS MONTH			ANNUAL	OPEN PO	YTD	REMAINING	PERCENT		....PROJECTED....	
ACTUAL		OBJ/SUB	BUDGET	& CONTRACTS	ACTUAL	BALANCE	PLAN	ACTUAL	OVER/UNDER	%
	_____									
	_____									
	TRANSFERS TO OTHER FUND									
	T/T GENERAL FUND	9000 01								
	T/T 2007 TIF B&I-T/C	9000 23								
	T/T KOHLS TIF B&I	9000 25								
---			---	---	---	---	---	---	---	---
	TRANSFERS TO OTHER F									
---			---	---	---	---	---	---	---	---
	TRANSFERS									
---			---	---	---	---	---	---	---	---
	EXPENDITURES									

			CITY OF HATTIESBURG							
	091602 - TIF CONST-ISSUE EXP		EXPENDITURE REPORT							
			1 Months Ending 10/31/12							
THIS MONTH			ANNUAL	OPEN PO	YTD	REMAINING	PERCENT		....PROJECTED....	
ACTUAL		OBJ/SUB	BUDGET	& CONTRACTS	ACTUAL	BALANCE	PLAN	ACTUAL	OVER/UNDER	%
	_____									
	_____									
	PROFESSIONAL SERVICES									
	LEGAL	6025								
	OTHER PROFESSIONAL SER	6049								
---			---	---	---	---	---	---	---	---
	PROFESSIONAL SERVICE									
	PRINTING AND BINDING									
	PRINTING	6200								
---			---	---	---	---	---	---	---	---
	PRINTING AND BINDING									
	OTHER SERVICES & CHARGE									
	SERVICES NOT SPECIFIED	6999								
---			---	---	---	---	---	---	---	---
	OTHER SERVICES & CHA									
---			---	---	---	---	---	---	---	---
	OTHER SERVICES & CHAR									
---			---	---	---	---	---	---	---	---
	EXPENDITURES									

			CITY OF HATTIESBURG							
	091603 - TIF CONST-STREETS		EXPENDITURE REPORT							
			1 Months Ending 10/31/12							
THIS MONTH			ANNUAL	OPEN PO	YTD	REMAINING	PERCENT		....PROJECTED....	
ACTUAL		OBJ/SUB	BUDGET	& CONTRACTS	ACTUAL	BALANCE	PLAN	ACTUAL	OVER/UNDER	%
	_____									
	_____									
	IMPROVEMENT OTHER THAN									
	OTHER IMPROVEMENTS	7295								
	'11 KHOLS/TIF PROJ	7295 33								
	'07 TURTLE CREEK/TIF	7295 34								
	'11 TURTLE CREEK/TIF	7295 39								
---			---	---	---	---	---	---	---	---
	OTHER IMPROVEMENTS									
---			---	---	---	---	---	---	---	---
	IMPROVEMENT OTHER TH									
---			---	---	---	---	---	---	---	---
	CAPITAL OUTLAY									
---			---	---	---	---	---	---	---	---
	EXPENDITURES									

			CITY OF HATTIESBURG							
	094500 - '12 W&S BOND CONST-TRANSFERS		EXPENDITURE REPORT							
			1 Months Ending 10/31/12							
THIS MONTH			ANNUAL	OPEN PO	YTD	REMAINING	PERCENT		....PROJECTED....	
ACTUAL		OBJ/SUB	BUDGET	& CONTRACTS	ACTUAL	BALANCE	PLAN	ACTUAL	OVER/UNDER	%
	_____									
	_____									
	TRANSFERS TO OTHER FUND									
	T/T WATER & SEWER B&I	9000 10								
---			---	---	---	---	---	---	---	---
	TRANSFERS TO OTHER F									
---			---	---	---	---	---	---	---	---
	TRANSFERS									
---			---	---	---	---	---	---	---	---
	EXPENDITURES									

			CITY OF HATTIESBURG							
	094602 - 2012 W&S CONST-ISSUE EXP		EXPENDITURE REPORT							
			1 Months Ending 10/31/12							
THIS MONTH			ANNUAL	OPEN PO	YTD	REMAINING	PERCENT		....PROJECTED....	
ACTUAL		OBJ/SUB	BUDGET	& CONTRACTS	ACTUAL	BALANCE	PLAN	ACTUAL	OVER/UNDER	%
	_____									
	_____									
	PROFESSIONAL SERVICES									
	LEGAL	6025								
	OTHER PROFESSIONAL SER	6049								
---			---	---	---	---	---	---	---	---
	PROFESSIONAL SERVICE									
	OTHER SERVICES & CHARGE									
	SERVICES NOT SPECIFIED	6999								
---			---	---	---	---	---	---	---	---
	OTHER SERVICES & CHA									
---			---	---	---	---	---	---	---	---
	OTHER SERVICES & CHAR									
---			---	---	---	---	---	---	---	---
	EXPENDITURES									

			CITY OF HATTIESBURG							
	094695 - 2012 W&S CONSTR.-CAPITAL PROJ		EXPENDITURE REPORT							
			1 Months Ending 10/31/12							
THIS MONTH			ANNUAL	OPEN PO	YTD	REMAINING	PERCENT		....PROJECTED....	
ACTUAL		OBJ/SUB	BUDGET	& CONTRACTS	ACTUAL	BALANCE	PLAN	ACTUAL	OVER/UNDER	%
	OPERATING SUPPLIES									
	ASPHALT & ASPHALT PROD	5400								
	OPERATING SUPPLIES									
	SUPPLIES AND EXPENSES									
	PROFESSIONAL SERVICES									
	ENGINEERING	6015								
	LEGAL	6025								
	OTHER PROFESSIONAL SER	6049								
	PROFESSIONAL SERVICE									
	REPR/MAINT-OUTSIDE LABO									
	STREETS & STRUCTURES R	6360								
	REPR/MAINT-OUTSIDE L									
	OTHER SERVICES & CHARGE									
	SERVICES NOT SPECIFIED	6999								
	OTHER SERVICES & CHA									
	OTHER SERVICES & CHAR									
	IMPROVEMENT OTHER THAN									
	SEWERS	7220								
	SEWER PHASE III	7220 01								
	S.LAGOON SLUDGE REMOV	7220 27								
1,945	SEWER PHASE I	7220 49	498,300	2,690	1,945	493,665	8%	0%	(474,960)	-95%
	SEWER PHASE II	7220 50	973,700	113,194		860,506	8%	0%	(973,700)	-100%
	SEWER PHASE IV	7220 51		4,500		(4,500)				
29,105	CCTV SEWER INSPECTION	7220 96			29,105	(29,105)			349,260	
	LAGOON DREDGING LOAN	7220 97								
31,050	**SEWERS**		**1,472,000**	**120,384**	**31,050**	**1,320,567**	**8%**	**2%**	**(1,099,400)**	**-75%**

			CITY OF HATTIESBURG							
	094695 - 2012 W&S CONSTR.-CAPITAL PROJ		EXPENDITURE REPORT							
			1 Months Ending 10/31/12							
THIS MONTH			ANNUAL	OPEN PO	YTD	REMAINING	PERCENT		....PROJECTED....	
ACTUAL		OBJ/SUB	BUDGET	& CONTRACTS	ACTUAL	BALANCE	PLAN	ACTUAL	OVER/UNDER	%
	WATER SYSTEMS	7245								
	HWY 98 BOOSTER STATIO	7245 03	250,431	2,520		247,911	8%	0%	(250,431)	-100%
1,625	HWY 98 ELEVATED WTR T	7245 04	517,923	575	1,625	515,723	8%	0%	(498,423)	-96%
	WATER PHASE II	7245 05								
	WATER PHASE III	7245 06								
	VETERANS BLVD WTR CON	7245 08	734,208			734,208	8%	0%	(734,208)	-100%
60,328	COUNTRY CLUB WTR II	7245 18	204,400	60,375	60,328	83,697	8%	30%	519,536	254%
74,664	TATUM-BONHOMIE WTR LI	7245 23	82,362	11,759	74,664	(4,061)	8%	91%	813,606	988%
380,095	HWY 98 FIRE LINES	7245 28	3,295,281	594,207	380,095	2,320,979	8%	12%	1,265,859	38%
	WATER PHASE I	7245 50	669,920	26,975		642,945	8%	0%	(669,920)	-100%
---			---	---	---	---	---	---	---	---
516,713	**WATER SYSTEMS**		**5,754,525**	**696,411**	**516,713**	**4,541,402**	**8%**	**9%**	**446,031**	**8%**
	OTHER IMPROVEMENTS	7295								
	MISC.OTHER IMPROVEMEN	7295 99								
---			---	---	---	---	---	---	---	---
	OTHER IMPROVEMENTS									
---			---	---	---	---	---	---	---	---
547,762	**IMPROVEMENT OTHER TH**		**7,226,525**	**816,795**	**547,762**	**5,861,968**	**8%**	**8%**	**(653,381)**	**-9%**
---			---	---	---	---	---	---	---	---
547,762	**CAPITAL OUTLAY**		**7,226,525**	**816,795**	**547,762**	**5,861,968**	**8%**	**8%**	**(653,381)**	**-9%**
---			---	---	---	---	---	---	---	---
547,762	**EXPENDITURES**		**7,226,525**	**816,795**	**547,762**	**5,861,968**	**8%**	**8%**	**(653,381)**	**-9%**

			CITY OF HATTIESBURG							
	095641 - 2001 BOND CONSTR-ZOO IMPR		EXPENDITURE REPORT							
			1 Months Ending 10/31/12							
THIS MONTH			ANNUAL	OPEN PO	YTD	REMAINING	PERCENT		....PROJECTED....	
ACTUAL		OBJ/SUB	BUDGET	& CONTRACTS	ACTUAL	BALANCE	PLAN	ACTUAL	OVER/UNDER	%
	_____									
	_____									
	BUILDING/BLD IMPROVEMEN									
	BUILDINGS	7100								
	REHAB. EXISTING BLDGS	7100 12								
---			---	---	---	---	---	---	---	---
	BUILDINGS									
---			---	---	---	---	---	---	---	---
	BUILDING/BLD IMPROVE									
	IMPROVEMENT OTHER THAN									
	OTHER IMPROVEMENTS	7295								
	ASIAN EXHIBIT	7295 11								
	MS HABITAT EXHIBIT	7295 12	187,300			187,300	8%	0%	(187,300)	-100%
	LION EXHIBIT	7295 14								
	SOUTH AMERICAN EXHIBI	7295 25								
---			---	---	---	---	---	---	---	---
	OTHER IMPROVEMENTS		**187,300**			**187,300**	**8%**	**0%**	**(187,300)**	**-100%**
---			---	---	---	---	---	---	---	---
	IMPROVEMENT OTHER TH		**187,300**			**187,300**	**8%**	**0%**	**(187,300)**	**-100%**
---			---	---	---	---	---	---	---	---
	CAPITAL OUTLAY		**187,300**			**187,300**	**8%**	**0%**	**(187,300)**	**-100%**
---			---	---	---	---	---	---	---	---
	EXPENDITURES		**187,300**			**187,300**	**8%**	**0%**	**(187,300)**	**-100%**

			CITY OF HATTIESBURG							
	096201 - MDB CAPITAL PROJ-STREETS		EXPENDITURE REPORT							
			1 Months Ending 10/31/12							
THIS MONTH			ANNUAL	OPEN PO	YTD	REMAINING	PERCENT		....PROJECTED....	
ACTUAL		OBJ/SUB	BUDGET	& CONTRACTS	ACTUAL	BALANCE	PLAN	ACTUAL	OVER/UNDER	%
	IMPROVEMENT OTHER THAN									
	STREETS & ROADWAYS	7230								
	4TH ST WIDENING-MDOT	7230 09								
	CHAIN PARK PROJ-MDOT	7230 76								
	CHAIN PARK-MDOT ARRA	7230 77								
	CHAIN PARK-HUD	7230 78	42,207	4,875		37,332	8%	0%	(42,207)	-100%
---			---	---	---	---	---	---	---	---
	STREETS & ROADWAYS		**42,207**	**4,875**		**37,332**	**8%**	**0%**	**(42,207)**	**-100%**
---			---	---	---	---	---	---	---	---
	IMPROVEMENT OTHER TH		**42,207**	**4,875**		**37,332**	**8%**	**0%**	**(42,207)**	**-100%**
---			---	---	---	---	---	---	---	---
	CAPITAL OUTLAY		**42,207**	**4,875**		**37,332**	**8%**	**0%**	**(42,207)**	**-100%**
---			---	---	---	---	---	---	---	---
	EXPENDITURES		**42,207**	**4,875**		**37,332**	**8%**	**0%**	**(42,207)**	**-100%**

			CITY OF HATTIESBURG							
	096402 - MDB CAPITAL PROJ-ECONOMIC DEV.		EXPENDITURE REPORT							
			1 Months Ending 10/31/12							
THIS MONTH			ANNUAL	OPEN PO	YTD	REMAINING	PERCENT		....PROJECTED....	
ACTUAL		OBJ/SUB	BUDGET	& CONTRACTS	ACTUAL	BALANCE	PLAN	ACTUAL	OVER/UNDER	%
	_____									
	_____									
	BUILDING/BLD IMPROVEMEN									
	BUILDING IMPROVEMENTS	7150								
	DEPOT PROJECT-GRANT R	7150 15								
	DEPOT PROJ NON-GRANT	7150 31								
	DEPOT PROJ-MDB	7150 35								
---			---	---	---	---	---	---	---	---
	BUILDING IMPROVEMEN									
---			---	---	---	---	---	---	---	---
	BUILDING/BLD IMPROVE									
---			---	---	---	---	---	---	---	---
	CAPITAL OUTLAY									
---			---	---	---	---	---	---	---	---
	EXPENDITURES									

			CITY OF HATTIESBURG							
	096602 - MDB CAPITAL PROJ-ISSUEEXP.		EXPENDITURE REPORT							
			1 Months Ending 10/31/12							
THIS MONTH			ANNUAL	OPEN PO	YTD	REMAINING	PERCENT		....PROJECTED....	
ACTUAL		OBJ/SUB	BUDGET	& CONTRACTS	ACTUAL	BALANCE	PLAN	ACTUAL	OVER/UNDER	%
	_____									
	_____									
	PROFESSIONAL SERVICES									
	LEGAL	6025								
---			---	---	---	---	---	---	---	---
	PROFESSIONAL SERVICE									
	PRINTING AND BINDING									
	PRINTING	6200								
---			---	---	---	---	---	---	---	---
	PRINTING AND BINDING									
---			---	---	---	---	---	---	---	---
	OTHER SERVICES & CHAR									
---			---	---	---	---	---	---	---	---
	EXPENDITURES									

			CITY OF HATTIESBURG							
	096695 - MDB CAPITAL PROJ-CAPITAL PROJ		EXPENDITURE REPORT							
			1 Months Ending 10/31/12							
THIS MONTH			ANNUAL	OPEN PO	YTD	REMAINING	PERCENT		....PROJECTED....	
ACTUAL		OBJ/SUB	BUDGET	& CONTRACTS	ACTUAL	BALANCE	PLAN	ACTUAL	OVER/UNDER	%
	_____									
	_____									
	PROFESSIONAL SERVICES									
	CONSULTANT SERV/SURVEY	6020								
	OTHER PROFESSIONAL SER	6049								
---			---	---	---	---	---	---	---	---
	PROFESSIONAL SERVICE									
---			---	---	---	---	---	---	---	---
	OTHER SERVICES & CHAR									
	_____									
	BUILDING/BLD IMPROVEMEN									
	BUILDINGS	7100								
	POLICE COMPLEX RENOVA	7150 07								
---			---	---	---	---	---	---	---	---
	BUILDINGS									
---			---	---	---	---	---	---	---	---
	BUILDING/BLD IMPROVE									
	IMPROVEMENT OTHER THAN									
	DRAINS	7215								
	DRAINAGE(CORPS OF ENG	7215 31								
---			---	---	---	---	---	---	---	---
	DRAINS									
	SEWERS	7220								
	PROGRAMMED SEWER PROJ	7220 99								
---			---	---	---	---	---	---	---	---
	SEWERS									
	WATER SYSTEMS	7245								
	PROGRAMMED WATER PROJ	7245 99								
---			---	---	---	---	---	---	---	---
	WATER SYSTEMS									
---			---	---	---	---	---	---	---	---
	IMPROVEMENT OTHER TH									
	MACHINERY AND EQUIPMENT									
	DATA PROCESSING EQUIP.	7327								
---			---	---	---	---	---	---	---	---
	MACHINERY AND EQUIPM									
---			---	---	---	---	---	---	---	---

			CITY OF HATTIESBURG							
	096695 - MDB CAPITAL PROJ-CAPITAL PROJ		EXPENDITURE REPORT							
			1 Months Ending 10/31/12							
THIS MONTH			ANNUAL	OPEN PO	YTD	REMAINING	PERCENT		....PROJECTED....	
ACTUAL		OBJ/SUB	BUDGET	& CONTRACTS	ACTUAL	BALANCE	PLAN	ACTUAL	OVER/UNDER	%
	CAPITAL OUTLAY									
----------			---------	---------	---------	---------	-----	-----	--------	-----
	EXPENDITURES									

			CITY OF HATTIESBURG							
	098300 - K.P.ZOO CAPITAL-REC.MAINT.		EXPENDITURE REPORT							
			1 Months Ending 10/31/12							
THIS MONTH			ANNUAL	OPEN PO	YTD	REMAINING	PERCENT		....PROJECTED....	
ACTUAL		OBJ/SUB	BUDGET	& CONTRACTS	ACTUAL	BALANCE	PLAN	ACTUAL	OVER/UNDER	%
	_____									
	_____									
	IMPROVEMENT OTHER THAN									
	KAB/LANDSCAPING	7226								
	RECREATION IMPROVEMENT	7256								
	MISC.REC.IMPR.	7256 99								
---			---	---	---	---	---	---	---	---
	RECREATION IMPROVEM									
---			---	---	---	---	---	---	---	---
	IMPROVEMENT OTHER TH									
---			---	---	---	---	---	---	---	---
	CAPITAL OUTLAY									
---			---	---	---	---	---	---	---	---
	EXPENDITURES									

			CITY OF HATTIESBURG							
	098341 - K.P.ZOO CAPITAL-KPZ		EXPENDITURE REPORT							
			1 Months Ending 10/31/12							
THIS MONTH			ANNUAL	OPEN PO	YTD	REMAINING	PERCENT		....PROJECTED....	
ACTUAL		OBJ/SUB	BUDGET	& CONTRACTS	ACTUAL	BALANCE	PLAN	ACTUAL	OVER/UNDER	%
	_____									
	_____									
	OPERATING SUPPLIES									
	OTHER OPERATING MATL/S	5590								
---			---	---	---	---	---	---	---	---
	OPERATING SUPPLIES									
---			---	---	---	---	---	---	---	---
	SUPPLIES AND EXPENSES									
	_____									
	OTHER SERVICES & CHARGE									
	SERVICES NOT SPECIFIED	6999								
---			---	---	---	---	---	---	---	---
	OTHER SERVICES & CHA									
---			---	---	---	---	---	---	---	---
	OTHER SERVICES & CHAR									
	_____									
	IMPROVEMENT OTHER THAN									
	OTHER IMPROVEMENTS	7295								
	ADAMS PLACE	7295 04								
41,398	QUARANTINE BLDG PROJE	7295 08	100,000		41,398	58,602	8%	41%	396,776	397%
	TIGER/LION EXHIBIT	7295 14								
	ZEBRA EXHIBIT	7295 17								
	SMALL ANIMAL EXHIBITS	7295 23								
	AFRICAN EXHIBIT	7295 25								
	MISC.OTHER IMPROVEMEN	7295 99								
---			---	---	---	---	---	---	---	---
41,398	**OTHER IMPROVEMENTS**		**100,000**		**41,398**	**58,602**	**8%**	**41%**	**396,776**	**397%**
---			---	---	---	---	---	---	---	---
41,398	**IMPROVEMENT OTHER TH**		**100,000**		**41,398**	**58,602**	**8%**	**41%**	**396,776**	**397%**
	MACHINERY AND EQUIPMENT									
	OTHER EQUIPMENT	7399								
---			---	---	---	---	---	---	---	---
	MACHINERY AND EQUIPM									
	OTHER									
	ZOOLOGICAL ANIMALS	7505								
---			---	---	---	---	---	---	---	---
	OTHER									

			CITY OF HATTIESBURG							
	098341 - K.P.ZOO CAPITAL-KPZ		EXPENDITURE REPORT							
			1 Months Ending 10/31/12							
THIS MONTH			ANNUAL	OPEN PO	YTD	REMAINING	PERCENT		....PROJECTED....	
ACTUAL		OBJ/SUB	BUDGET	& CONTRACTS	ACTUAL	BALANCE	PLAN	ACTUAL	OVER/UNDER	%
---			---	---	---	---	---	---	---	---
41,398	**CAPITAL OUTLAY**		**100,000**		**41,398**	**58,602**	**8%**	**41%**	**396,776**	**397%**
---			---	---	---	---	---	---	---	---
41,398	**EXPENDITURES**		**100,000**		**41,398**	**58,602**	**8%**	**41%**	**396,776**	**397%**

			CITY OF HATTIESBURG							
	098553 - K.P.ZOO CAPITAL-CEMETERY		EXPENDITURE REPORT							
			1 Months Ending 10/31/12							
THIS MONTH			ANNUAL	OPEN PO	YTD	REMAINING	PERCENT		....PROJECTED....	
ACTUAL		OBJ/SUB	BUDGET	& CONTRACTS	ACTUAL	BALANCE	PLAN	ACTUAL	OVER/UNDER	%
	_____									
	_____									
	IMPROVEMENT OTHER THAN									
	LANDSCAPING	7250								
	OTHER IMPROVEMENTS	7295								
	CEMETERY PROJ.IMPR.	7295 30								
---			---	---	---	---	---	---	---	---
	OTHER IMPROVEMENTS									
---			---	---	---	---	---	---	---	---
	IMPROVEMENT OTHER TH									
---			---	---	---	---	---	---	---	---
	CAPITAL OUTLAY									
---			---	---	---	---	---	---	---	---
	EXPENDITURES									

			CITY OF HATTIESBURG							
	099602 - 2010 W & S GO BOND-ISSUE EXP.		EXPENDITURE REPORT							
			1 Months Ending 10/31/12							
THIS MONTH			ANNUAL	OPEN PO	YTD	REMAINING	PERCENT		....PROJECTED....	
ACTUAL		OBJ/SUB	BUDGET	& CONTRACTS	ACTUAL	BALANCE	PLAN	ACTUAL	OVER/UNDER	%
	_____									
	_____									
	PROFESSIONAL SERVICES									
	LEGAL	6025								
	OTHER PROFESSIONAL SER	6049								
---			---	---	---	---	---	---	---	---
	PROFESSIONAL SERVICE									
	PRINTING AND BINDING									
	PRINTING	6200								
---			---	---	---	---	---	---	---	---
	PRINTING AND BINDING									
	OTHER SERVICES & CHARGE									
	SERVICES NOT SPECIFIED	6999								
---			---	---	---	---	---	---	---	---
	OTHER SERVICES & CHA									
---			---	---	---	---	---	---	---	---
	OTHER SERVICES & CHAR									
---			---	---	---	---	---	---	---	---
	EXPENDITURES									

			CITY OF HATTIESBURG							
	099603 - 2010 W & S GO BOND-STREETS		EXPENDITURE REPORT							
			1 Months Ending 10/31/12							
THIS MONTH			ANNUAL	OPEN PO	YTD	REMAINING	PERCENT		....PROJECTED....	
ACTUAL		OBJ/SUB	BUDGET	& CONTRACTS	ACTUAL	BALANCE	PLAN	ACTUAL	OVER/UNDER	%
	_____									
	_____									
	IMPROVEMENT OTHER THAN									
	STREETS & ROADWAYS	7230								
	N.31ST AVENUE	7230 06								
	NEW SCHOOL ROAD	7230 08								
	E.4TH STREET	7230 11								
	S.28TH AVENUE	7230 14								
	LINCOLN ROAD-#3	7230 27								
	LINCOLN ROAD-#4	7230 29								
	N.40TH AVENUE	7230 30								
	MONTAGUE-N.40TH TO N3	7230 31								
	ED TURNER DRIVE	7230 32								
	S.31ST-HARDY TO MAMIE	7230 33								
	MAMIE FROM S.28TH-31S	7230 34								
	TUSCAN-MLK TO BERNARD	7230 35								
	CLASSIC DR-HWY 42-GOL	7230 36								
---			---	---	---	---	---	---	---	---
	STREETS & ROADWAYS									
---			---	---	---	---	---	---	---	---
	IMPROVEMENT OTHER TH									
---			---	---	---	---	---	---	---	---
	CAPITAL OUTLAY									
---			---	---	---	---	---	---	---	---
	EXPENDITURES									

			CITY OF HATTIESBURG							
	099606 - 2010 W & S GO BOND-DRAINAGE		EXPENDITURE REPORT							
			1 Months Ending 10/31/12							
THIS MONTH			ANNUAL	OPEN PO	YTD	REMAINING	PERCENT		....PROJECTED....	
ACTUAL		OBJ/SUB	BUDGET	& CONTRACTS	ACTUAL	BALANCE	PLAN	ACTUAL	OVER/UNDER	%
	_____									
	_____									
	IMPROVEMENT OTHER THAN									
	DRAINS	7215								
	ASHFORD-EASTSIDE TO M	7215 03								
	E.HARDY/WILLIAMS	7215 05								
	EDWARD ST.@RAILROAD	7215 11								
---			---	---	---	---	---	---	---	---
	DRAINS									
---			---	---	---	---	---	---	---	---
	IMPROVEMENT OTHER TH									
---			---	---	---	---	---	---	---	---
	CAPITAL OUTLAY									
---			---	---	---	---	---	---	---	---
	EXPENDITURES									

			CITY OF HATTIESBURG							
	099627 - 2010 W & S GO BOND-WATER		EXPENDITURE REPORT							
			1 Months Ending 10/31/12							
THIS MONTH			ANNUAL	OPEN PO	YTD	REMAINING	PERCENT		....PROJECTED....	
ACTUAL		OBJ/SUB	BUDGET	& CONTRACTS	ACTUAL	BALANCE	PLAN	ACTUAL	OVER/UNDER	%
	_____									
	_____									
	LAND									
	LAND	7000								
---			---	---	---	---	---	---	---	---
	LAND									
	IMPROVEMENT OTHER THAN									
	WATER SYSTEMS	7245								
	IND.PARK WATER LINES	7245 01								
	IND.PARK ELEVATED TAN	7245 04								
	WATER WELL@ PLANT #1	7245 05								
	VETERANS BLVD - WATER	7245 08								
	WESLEY FILTRATION PLA	7245 09								
---			---	---	---	---	---	---	---	---
	WATER SYSTEMS									
---			---	---	---	---	---	---	---	---
	IMPROVEMENT OTHER TH									
---			---	---	---	---	---	---	---	---
	CAPITAL OUTLAY									
---			---	---	---	---	---	---	---	---
	EXPENDITURES									

			CITY OF HATTIESBURG							
	099630 - 2010 W & S GO BOND-SEWERS		EXPENDITURE REPORT							
			1 Months Ending 10/31/12							
THIS MONTH			ANNUAL	OPEN PO	YTD	REMAINING	PERCENT		....PROJECTED....	
ACTUAL		OBJ/SUB	BUDGET	& CONTRACTS	ACTUAL	BALANCE	PLAN	ACTUAL	OVER/UNDER	%
	IMPROVEMENT OTHER THAN									
	SEWERS	7220								
	FRANKLIN STREET	7220 12								
	ARLEDGE-MANNING TO CT	7220 22								
	COLUMBIA-PROV.TO RAWL	7220 23								
	ASHFORD-C.CLUB TO MLK	7220 24								
	PROVIDENCE-COLUMBIA T	7220 25								
275,946	N.LAGOON EXPANSION	7220 26	868,299		275,946	592,353	8%	32%	2,443,053	281%
	S.LAGOON DISINFECTION	7220 27								
	IND.PARK SEWER LINES	7220 28								
---			---	---	---	---	---	---	---	---
275,946	**SEWERS**		**868,299**		**275,946**	**592,353**	**8%**	**32%**	**2,443,053**	**281%**
---			---	---	---	---	---	---	---	---
275,946	**IMPROVEMENT OTHER TH**		**868,299**		**275,946**	**592,353**	**8%**	**32%**	**2,443,053**	**281%**
---			---	---	---	---	---	---	---	---
275,946	**CAPITAL OUTLAY**		**868,299**		**275,946**	**592,353**	**8%**	**32%**	**2,443,053**	**281%**
---			---	---	---	---	---	---	---	---
275,946	**EXPENDITURES**		**868,299**		**275,946**	**592,353**	**8%**	**32%**	**2,443,053**	**281%**

			CITY OF HATTIESBURG							
	105500 - '06 W&S BOND CONST-TRANSFERS		EXPENDITURE REPORT							
			1 Months Ending 10/31/12							
THIS MONTH			ANNUAL	OPEN PO	YTD	REMAINING	PERCENT		....PROJECTED....	
ACTUAL		OBJ/SUB	BUDGET	& CONTRACTS	ACTUAL	BALANCE	PLAN	ACTUAL	OVER/UNDER	%
	_____									
	_____									
	TRANSFERS TO OTHER FUND									
	T/T WATER & SEWER B&I	9000 10								
---			---	---	---	---	---	---	---	---
	TRANSFERS TO OTHER F									
---			---	---	---	---	---	---	---	---
	TRANSFERS									
---			---	---	---	---	---	---	---	---
	EXPENDITURES									

			CITY OF HATTIESBURG							
	105602 - 2006 W&S CONST-ISSUE EXP		EXPENDITURE REPORT							
			1 Months Ending 10/31/12							
THIS MONTH			ANNUAL	OPEN PO	YTD	REMAINING	PERCENT		....PROJECTED....	
ACTUAL		OBJ/SUB	BUDGET	& CONTRACTS	ACTUAL	BALANCE	PLAN	ACTUAL	OVER/UNDER	%
	_____									
	_____									
	PROFESSIONAL SERVICES									
	LEGAL	6025								
	OTHER PROFESSIONAL SER	6049								
---			---	---	---	---	---	---	---	---
	PROFESSIONAL SERVICE									
	OTHER SERVICES & CHARGE									
	SERVICES NOT SPECIFIED	6999								
---			---	---	---	---	---	---	---	---
	OTHER SERVICES & CHA									
---			---	---	---	---	---	---	---	---
	OTHER SERVICES & CHAR									
---			---	---	---	---	---	---	---	---
	EXPENDITURES									

			CITY OF HATTIESBURG							
	105695 - 2006 W&S CONSTR.-CAPITAL PROJ		EXPENDITURE REPORT							
			1 Months Ending 10/31/12							
THIS MONTH			ANNUAL	OPEN PO	YTD	REMAINING	PERCENT		....PROJECTED....	
ACTUAL		OBJ/SUB	BUDGET	& CONTRACTS	ACTUAL	BALANCE	PLAN	ACTUAL	OVER/UNDER	%
	OPERATING SUPPLIES									
	ASPHALT & ASPHALT PROD	5400								
---			---	---	---	---	---	---	---	---
	OPERATING SUPPLIES									
---			---	---	---	---	---	---	---	---
	SUPPLIES AND EXPENSES									
	PROFESSIONAL SERVICES									
	ENGINEERING	6015								
	LEGAL	6025								
	OTHER PROFESSIONAL SER	6049								
---			---	---	---	---	---	---	---	---
	PROFESSIONAL SERVICE									
	REPR/MAINT-OUTSIDE LABO									
	STREETS & STRUCTURES R	6360								
---			---	---	---	---	---	---	---	---
	REPR/MAINT-OUTSIDE L									
	OTHER SERVICES & CHARGE									
	SERVICES NOT SPECIFIED	6999								
---			---	---	---	---	---	---	---	---
	OTHER SERVICES & CHA									
---			---	---	---	---	---	---	---	---
	OTHER SERVICES & CHAR									
	IMPROVEMENT OTHER THAN									
	SEWERS	7220								
	S1-N.LAGOON EXPANSION	7220 26								
	S2-W 592 SWR W OF RAI	7220 38								
	S3-E 592 SWR E OF RAI	7220 39								
	S4-W BOND SWR W OF RA	7220 40								
	S5-E BOND SWR E OF RA	7220 41								
	S6-ANNEXATION AREA SE	7220 42								
	S7-SEWER LIFT STA IMP	7220 43								
	SULLIVAN KIL TO J MIM	7220 44								
	HWY 49 N SEWER	7220 45								

			CITY OF HATTIESBURG							
	105695 - 2006 W&S CONSTR.-CAPITAL PROJ		EXPENDITURE REPORT							
			1 Months Ending 10/31/12							
THIS MONTH			ANNUAL	OPEN PO	YTD	REMAINING	PERCENT		....PROJECTED....	
ACTUAL		OBJ/SUB	BUDGET	& CONTRACTS	ACTUAL	BALANCE	PLAN	ACTUAL	OVER/UNDER	%
	PROGRAMMED SEWER PROJ	7220 99								
---			---	---	---	---	---	---	---	---
	SEWERS									
	WATER SYSTEMS	7245								
	JAMES ST WTR PLT-MATC	7245 02								
	W1-COUNTRY CLUB WATER	7245 18								
	W2-WESLEY PLANT TREAT	7245 26								
	W3-WATER WELL@ PLANT	7245 27								
	W4-FIRE LINES-CNTRY C	7245 28								
	PROGRAMMED WATER PROJ	7245 99								
---			---	---	---	---	---	---	---	---
	WATER SYSTEMS									
	OTHER IMPROVEMENTS	7295								
	MISC.OTHER IMPROVEMEN	7295 99								
---			---	---	---	---	---	---	---	---
	OTHER IMPROVEMENTS									
---			---	---	---	---	---	---	---	---
	IMPROVEMENT OTHER TH									
---			---	---	---	---	---	---	---	---
	CAPITAL OUTLAY									
---			---	---	---	---	---	---	---	---
	EXPENDITURES									

			CITY OF HATTIESBURG							
	107500 - SPEC.SALES TAX-TRANSFERS		EXPENDITURE REPORT							
			1 Months Ending 10/31/12							
THIS MONTH			ANNUAL	OPEN PO	YTD	REMAINING	PERCENT		....PROJECTED....	
ACTUAL		OBJ/SUB	BUDGET	& CONTRACTS	ACTUAL	BALANCE	PLAN	ACTUAL	OVER/UNDER	%
	_____									
	_____									
	TRANSFERS TO OTHER FUND									
	T/T GENERAL FUND	9000 01								
10,427	T/T CITY B & I	9000 13			10,427	(10,427)			125,124	
---			---	---	---	---	---	---	---	---
10,427	**TRANSFERS TO OTHER F**				**10,427**	**(10,427)**			**125,124**	
---			---	---	---	---	---	---	---	---
10,427	**TRANSFERS**				**10,427**	**(10,427)**			**125,124**	
---			---	---	---	---	---	---	---	---
10,427	**EXPENDITURES**				**10,427**	**(10,427)**			**125,124**	

			CITY OF HATTIESBURG							
	107706 - SPEC.SALES TAX-T&A EXPEND.		EXPENDITURE REPORT							
			1 Months Ending 10/31/12							
THIS MONTH			ANNUAL	OPEN PO	YTD	REMAINING	PERCENT		....PROJECTED....	
ACTUAL		OBJ/SUB	BUDGET	& CONTRACTS	ACTUAL	BALANCE	PLAN	ACTUAL	OVER/UNDER	%
	_____									
	_____									
	PROFESSIONAL SERVICES									
	OTHER PROFESSIONAL SER	6049								
48,675	TOURISM COMMISSION	6049 01			48,675	(48,675)			584,100	
352,011	CONVENTION COMMISSION	6049 02			352,011	(352,011)			4,224,132	
---			---	---	---	---	---	---	---	---
400,685	**OTHER PROFESSIONAL**				**400,685**	**(400,685)**			**4,808,220**	
---			---	---	---	---	---	---	---	---
400,685	**PROFESSIONAL SERVICE**				**400,685**	**(400,685)**			**4,808,220**	
---			---	---	---	---	---	---	---	---
400,685	**OTHER SERVICES & CHAR**				**400,685**	**(400,685)**			**4,808,220**	
---			---	---	---	---	---	---	---	---
400,685	**EXPENDITURES**				**400,685**	**(400,685)**			**4,808,220**	

			CITY OF HATTIESBURG							
	109704 - GROUP INS.TRUST-T&A EXPEND.		EXPENDITURE REPORT							
			1 Months Ending 10/31/12							
THIS MONTH			ANNUAL	OPEN PO	YTD	REMAINING	PERCENT		....PROJECTED....	
ACTUAL		OBJ/SUB	BUDGET	& CONTRACTS	ACTUAL	BALANCE	PLAN	ACTUAL	OVER/UNDER	%
	_____									
	_____									
	OTHER SERVICES & CHARGE									
	BANK SERV/TRF FEE	6832								
65,013	ADMIN PAID	6833			65,013	(65,013)			780,156	
197,306	CLAIMS PAID	6834			197,306	(197,306)			2,367,672	
---			---	---	---	---	---	---	---	---
262,320	**OTHER SERVICES & CHA**				**262,320**	**(262,320)**			**3,147,840**	
---			---	---	---	---	---	---	---	---
262,320	**OTHER SERVICES & CHAR**				**262,320**	**(262,320)**			**3,147,840**	
---			---	---	---	---	---	---	---	---
262,320	**EXPENDITURES**				**262,320**	**(262,320)**			**3,147,840**	

		CITY OF HATTIESBURG							. 1
001001 - GENERAL FUND REVENUES		REVENUE REPORT							11/1/12
		1 MONTHS ENDING 10/31/12							
		.....CURRENT.....			.....YEAR-TO-DATE.....			ANNUAL	UNREALIZED
	OBJ/SUB	ESTIMATED	ACTUAL	%REV	ESTIMATED	ACTUAL	%REV	ESTIMATE	BALANCE
REVENUES	200								
TAXES-OTHER	206A								
PAYMENT IN LIEU OF TAXE	2060								
HOUSING AUTHORITY	2065	2,333			2,333			28,000	28,000
MERCHANTS COMPANY	2066								
COLLECTIONS-P/Y EXCESS	2070								
	---	---	---	---	---	---	---	---	---
PAYMENT IN LIEU OF T		**2,333**			**2,333**			**28,000**	**28,000**
	---	---	---	---	---	---	---	---	---
TAXES-OTHER		**2,333**			**2,333**			**28,000**	**28,000**
LICENSES, PERMITS & FEES	220A								
PRIVILEGE LICENSES	2200	13,333	13,831	103%	13,333	13,831	103%	160,000	146,169
FRANCHISES	2210								
ELECTRICAL FRANCHISE	2211	241,666	649,058	268%	241,666	649,058	268%	2,900,000	2,250,942
SOLID WASTE OPER/FRANC	2212	18,750	16,775	89%	18,750	16,775	89%	225,000	208,225
GAS FRANCHISE	2215	16,250	25,776	158%	16,250	25,776	158%	195,000	169,224
CABLE T.V. FRANCHISE	2219	38,333			38,333			460,000	460,000
	---	---	---	---	---	---	---	---	---
FRANCHISES		**315,000**	**691,608**	**219%**	**315,000**	**691,608**	**219%**	**3,780,000**	**3,088,392**
BLDG/INSP PERMITS & FEE	2220								
BUILDING PERMIT/INSPEC	2221	32,083	52,142	162%	32,083	52,142	162%	385,000	332,858
FIRE INSPECTION	2222								
SIGN PERMIT	2223	1,333	1,515	113%	1,333	1,515	113%	16,000	14,485
LAND CODE ENFORCEMENT	2224	2,666	3,254	122%	2,666	3,254	122%	32,000	28,746
GAS & PLUMBING	2225	1,000	800	80%	1,000	800	80%	12,000	11,200
ELECTRICAL INSPECTION	2226	2,083	1,102	52%	2,083	1,102	52%	25,000	23,898
DEMOLITION PERMIT	2227	166	150	90%	166	150	90%	2,000	1,850
HOUSE MOVING	2228								
	---	---	---	---	---	---	---	---	---
BLDG/INSP PERMITS &		**39,333**	**58,963**	**149%**	**39,333**	**58,963**	**149%**	**472,000**	**413,037**
OTHER PERMITS & FEES	2230								
PUBLIC RECORDS ACCESS	2233								
PROPERTY CLEAN-UP COST	2234	416	300	72%	416	300	72%	5,000	4,700
TAXI BADGE PERMIT	2235	8	50	625%	8	50	625%	100	50
WRECKER REGISTRATION F	2236	33	25	75%	33	25	75%	400	375
BURN OR MISC FIRE PERM	2237	83			83			1,000	1,000
AMBULANCE PERMIT	2238								

		CITY OF HATTIESBURG							. 1
001001 - GENERAL FUND REVENUES		REVENUE REPORT							11/1/12
		1 MONTHS ENDING 10/31/12							
		.....CURRENT.....			.....YEAR-TO-DATE.....			ANNUAL	UNREALIZED
	OBJ/SUB	ESTIMATED	ACTUAL	%REV	ESTIMATED	ACTUAL	%REV	ESTIMATE	BALANCE
ZONING PETITION FEE	2240								
ZONING CERTIFICATE FEE	2245	500	575	115%	500	575	115%	6,000	5,425
TITLE PLEDGE LICENSE F	2248								
EXAMINATION FEE	2250								
CONTRACTOR LICENSE FEE	2255								
ORDINANCE SALES	2260								
ORDINANCE VIOLATION FE	2265								
DATA PROCESSING FEES	2280								
NSF CHECK FEE	2290	41	120	292%	41	120	292%	500	380
MISC. PERMITS & FEES	2299	1,250	11		1,250	11		15,000	14,990
	----------	----------	---------	----	----------	---------	----	----------	----------
OTHER PERMITS & FEES		**2,333**	**1,081**	**46%**	**2,333**	**1,081**	**46%**	**28,000**	**26,920**
	----------	----------	---------	----	----------	---------	----	----------	----------
LICENSES, PERMITS & F		**370,000**	**765,483**	**206%**	**370,000**	**765,483**	**206%**	**4,440,000**	**3,674,518**
INTER-GOVERNMNTL REVENUE	230A								
FEDERAL GRANTS	230B								
JUST./USM-PROJECT SAFE	2304								
JUST./USM-POLICE CORPS	2305								
JUST.-OTHER	2307								
JUST.-COPS SECURE SCHOO	2309								
JUST.-JAIL DIVERSION	2310	5,228	41,744	798%	5,228	41,744	798%	62,736	20,992
JUST.-BYRNE GRANTS	2311								
JUST.-DOMESTIC PREP'06	2312	3,886			3,886			46,632	46,632
JUST.-COPS IN SCHOOLS	2313								
JUST.-DOMESTIC PREPARED	2314	416			416			5,000	5,000
JUST.-COPS METHAMPHETAM	2315								
JUST.-COPS HIRING RECOV	2316								
JUST.-UNIVERSAL COPS	2317								
JUST.-COPS TECHNOLOGY	2318								
JUST.-LLEBG '04	2319								
SAFE COMMUNITY PROJECT	2320								
NRCS-USDA STORM RELATED	2322	51,826			51,826			621,923	621,923
FHWA-STORM RELATED	2323								
FEMA-EMER. WARNING SIRE	2324								
FEMA-'04 REGIONAL RESPO	2325								
FIREFIGHTERS GRANT	2326								

		CITY OF HATTIESBURG							. 1
001001 - GENERAL FUND REVENUES		REVENUE REPORT							11/1/12
		1 MONTHS ENDING 10/31/12							
		.....CURRENT.....			.....YEAR-TO-DATE.....			ANNUAL	UNREALIZED
	OBJ/SUB	ESTIMATED	ACTUAL	%REV	ESTIMATED	ACTUAL	%REV	ESTIMATE	BALANCE
FEMA-'05 REGIONAL RESPO	2327								
FEMA-CITIZENS CORPS	2328								
LAW ENF.GRANTS-OTHER	2329								
FEMA/HAZARD MITIG/GENER	2336								
FEMA RELIEF	2337								
CDBG-FIRE STATION	2338		191,123			191,123			(191,123)
MISC FEDERAL GRANTS	2339								
ARRA-STOP VIOLENCE GRAN	2348								
FEMA RELIEF ADMIN.	2349								
DEPT.OF DEFENSE-CAMP SH	2350								
EPA-BROWNSFIELD PROJ	2356	879			879			10,559	10,559
HUD-MIDTOWN STUDY	2360	2,339			2,339			28079-	(28,079)
HUD/MDA HUB CITY LOFT P	2361								
	----------	----------	---------	----	----------	---------	----	----------	----------
FEDERAL GRANTS		**59,897**	**232,867**	**388%**	**59,897**	**232,867**	**388%**	**718,771**	**485,904**
STATE GRANTS	250B								
MOSQUITO CONTROL GRANT	2504								
ARCHIVES & HISTORY	2505								
JUVENILE PREVENTION PRO	2510								
JUVENILE ACCT.INCENTIVE	2511	5,120			5,120			61,445	61,445
EMER.SHELTER-MDA GRANT	2513								
I.P.-HYBERPLASTIC-MDA G	2514								
POLICE ACADEMY REIMB.	2515								
SOLID WASTE GRANT	2518	6,250			6,250			75,000	75,000
URBAN YOUTH CORPS MDOT	2519	2,916			2,916			35,000	35,000
DEQ GRANTS(SO.LAGOON ST	2520								
ARTS COMMISSION GRANT	2521								
BEAUTIFICATION-VARIOUS	2522								
MS CITY CORPS COUNCIL	2523								
STOP VIOLENCE GRANT	2526	1,979	1,640	82%	1,979	1,640	82%	23,748	22,108
ALCOHOL INCENTIVE	2527	6,935			6,935			83,227	83,227
JUSTICE ASSISTANCE	2528								
DISASTER RELIEF	2545								
MEMA-DOMESTIC PREPAREDN	2550								
MEMA-SAFE ROOMS	2551								
MDOT GRANT-DEPOT PROJEC	2556								
MDOT GRANT-VISITOR'S CT	2557								

		CITY OF HATTIESBURG							. 1
001001 - GENERAL FUND REVENUES		REVENUE REPORT							11/1/12
		1 MONTHS ENDING 10/31/12							
		.....CURRENT.....			.....YEAR-TO-DATE.....			ANNUAL	UNREALIZED
	OBJ/SUB	ESTIMATED	ACTUAL	%REV	ESTIMATED	ACTUAL	%REV	ESTIMATE	BALANCE
MDOT GRANT-TRAFFIC STUD	2558								
	---	---	---	---	---	---	---	---	---
STATE GRANTS		**23,201**	**1,640**	**7%**	**23,201**	**1,640**	**7%**	**278,420**	**276,780**
STATE-SHARED REVENUE	260B								
GENERAL SALES TAX	2600	1,666,666	1,624,558	97%	1,666,666	1,624,558	97%	20,000,000	18,375,442
CITY UTILITY TAX	2601	500	264	52%	500	264	52%	6,000	5,736
SALES TAX-SRF REIMB.	2602		36,105			36,105			(36,105)
ALCOHOLIC BEV. LICENSE	2610	12,500	11,925	95%	12,500	11,925	95%	150,000	138,075
MOTOR VEH.PRIVILEGE TAX	2635	8,333			8,333			100,000	100,000
PAT HARRISON WATERWAY D	2665								
HATT.METROPLTN. PLANNIN	2670	16,666			16,666			200,000	200,000
MISC DORMANT ACCOUNT RF	2699								
	---	---	---	---	---	---	---	---	---
STATE-SHARED REVENUE		**1,704,666**	**1,672,852**	**98%**	**1,704,666**	**1,672,852**	**98%**	**20,456,000**	**18,783,148**
CITY/COUNTY-SHARED REVEN	270B								
FORREST CTY	2705								
FORREST CTY CAMP SHELBY	2705 01								
FORREST CTY GORDON CRK	2705 02								
FORREST GENERAL CTY HOS	2706								
FORREST-INFRAST.IMPR.	2707								
LAMAR-INFRAST.IMPR.	2708								
LAMAR/FORREST-HAZ.WASTE	2709								
PETAL/F-CO FLOOD INUNDA	2718	1,333			1,333			16,000	16,000
FORREST CTY-TWIN FORKS	2719								
HPSD-COPS IN SCHOOLS	2720								
CONV.COMM/TOURISM BUREA	2725								
METRO WAGES/MILEAGE-FOR	2735	4,166			4,166			50,000	50,000
METRO NARC.O/T-FORREST	2736								
MEMA/HAZARD MITIG/GENER	2739								
	---	---	---	---	---	---	---	---	---
CITY/COUNTY-SHARED RE		**5,500**			**5,500**			**66,000**	**66,000**
CHARGES FOR SERVICES	280A								
PUBLIC SAFETY	2850								
CRIME SCENE UNIT CONT	2855	2,083			2,083			25,000	25,000
FIRE DPT.SERV FOR OTHE	2860	416			416			5,000	5,000
800 MHZ RADIO ACCESS F	2865								

		CITY OF HATTIESBURG							. 1
001001 - GENERAL FUND REVENUES		REVENUE REPORT							11/1/12
		1 MONTHS ENDING 10/31/12							
		.....CURRENT.....			.....YEAR-TO-DATE.....			ANNUAL	UNREALIZED
	OBJ/SUB	ESTIMATED	ACTUAL	%REV	ESTIMATED	ACTUAL	%REV	ESTIMATE	BALANCE
POLICE/FIRE-SPECIAL DU	2870	13,333	11,168	83%	13,333	11,168	83%	160,000	148,832
P&F LATERAL TRNG REIMB	2880								
DRUG ENF.AGENCY O/T RE	2881		1,500			1,500			(1,500)
HOMELAND SECURITY O/T	2882								
US MARSHALL O/T REIMB.	2883								
	---	---	---	---	---	---	---	---	---
PUBLIC SAFETY		**15,833**	**12,668**	**80%**	**15,833**	**12,668**	**80%**	**190,000**	**177,332**
TROLLEY SERVICE	2890								
CONV.CENTER TROLLEY FE	2895								
TROLLEY RECEIPTS	2896								
	---	---	---	---	---	---	---	---	---
TROLLEY SERVICE									
STREETS	2900								
STREET WORK	2901								
PARKING METERS	2910	166			166			2,000	2,000
PARKING FINES	2915	1,000	466	46%	1,000	466	46%	12,000	11,535
CROSSING LIGHT FEES	2920	8	27	337%	8	27	337%	100	73
LOT CLEAN-UP/HEAVY TRA	2930	83			83			1,000	1,000
CDBG LOT CLEAN-UP/DEMO	2931	416			416			5,000	5,000
	---	---	---	---	---	---	---	---	---
STREETS		**1,675**	**493**	**29%**	**1,675**	**493**	**29%**	**20,100**	**19,608**
SANITATION	2950								
TRASH HAULING	2960	11,666	9,815	84%	11,666	9,815	84%	140,000	130,185
RESIDENTL WASTE COLLEC	2965	173,333	178,318	102%	173,333	178,318	102%	2,080,000	1,901,682
SANITA-REFUND & RECOVE	2970								
	---	---	---	---	---	---	---	---	---
SANITATION		**185,000**	**188,134**	**101%**	**185,000**	**188,134**	**101%**	**2,220,000**	**2,031,866**
	---	---	---	---	---	---	---	---	---
CHARGES FOR SERVICES		**202,508**	**201,294**	**99%**	**202,508**	**201,294**	**99%**	**2,430,100**	**2,228,806**
FINES AND FORFEITS	330A								
POLICE FINES	3320	116,666	30,054	25%	116,666	30,054	25%	1,400,000	1,369,946
CITY COURT COSTS	3321	16,666	4,123	24%	16,666	4,123	24%	200,000	195,877
CCC-JAIL REIMB.	3322	166	37	22%	166	37	22%	2,000	1,963
ENVIR CT-CODE VIOLATION	3323								
ANIMAL CONTROL	3327								
	---	---	---	---	---	---	---	---	---
FINES AND FORFEITS		**133,500**	**34,214**	**25%**	**133,500**	**34,214**	**25%**	**1,602,000**	**1,567,786**

		CITY OF HATTIESBURG							. 1
001001 - GENERAL FUND REVENUES		REVENUE REPORT							11/1/12
		1 MONTHS ENDING 10/31/12							
		.....CURRENT.....			.....YEAR-TO-DATE.....			ANNUAL	UNREALIZED
	OBJ/SUB	ESTIMATED	ACTUAL	%REV	ESTIMATED	ACTUAL	%REV	ESTIMATE	BALANCE
MISCELLANEOUS	340A								
INTEREST EARNINGS	3400								
CERTIFICATES OF DEPOSI	3402								
OTHER INTEREST-CD'S	3403								
SAVINGS ACCOUNT/MMA	3405	333	446	133%	333	446	133%	4,000	3,554
INTEREST-GRANT MONIES	3406								
OTHER INTEREST-MMA	3407								
REPURCHASE AGREEMENTS	3408								
TREASURY NOTES	3409								
	----------	----------	---------	----	----------	---------	----	----------	----------
INTEREST EARNINGS		**333**	**446**	**133%**	**333**	**446**	**133%**	**4,000**	**3,554**
RENTS AND ROYALTIES	3410								
LAND	3411								
LAMAR OUTDOOR ADVERTI	3411 05								
ALWEST ADVERTISING	3411 10								
MS.POWER-HWY.42	3411 11								
TRITELL COMMUNICATION	3411 12								
	----------	----------	---------	----	----------	---------	----	----------	----------
LAND									
BUILDING	3412								
DEPOT FACILITY	3412 01	1,250	200	16%	1,250	200	16%	15,000	14,800
P&F ACADEMY RENTALS	3412 02								
SEXUAL ASSAULT CRISIS	3412 05								
MERCHANTS	3412 07	200			200			2,400	2,400
USM CELLULAR ONE RENT	3412 41								
HUBSOUTH/WATER TOWER	3412 62								
OTHER BLDG. RENT	3412 99								
	----------	----------	---------	----	----------	---------	----	----------	----------
BUILDING		**1,450**	**200**	**13%**	**1,450**	**200**	**13%**	**17,400**	**17,200**
PARKING GARAGE-CIVIC C	3415	2,500	2,498	99%	2,500	2,498	99%	30,000	27,503
PARKING GARAGE-PINE ST	3416	2,916	3,300	113%	2,916	3,300	113%	35,000	31,700
PARKING SPACES	3417								
MAIN STREET PARKING L	3417 01	500	50	10%	500	50	10%	6,000	5,950
CHURCH PARKING LOT	3417 02	416	425	102%	416	425	102%	5,000	4,575
RAILROAD PARKING LOT	3417 03	1,083	1,270	117%	1,083	1,270	117%	13,000	11,730
MOBILE ST. PKG.LOT #1	3417 04	275	190	69%	275	190	69%	3,300	3,110

		CITY OF HATTIESBURG							. 1
001001 - GENERAL FUND REVENUES		REVENUE REPORT							11/1/12
		1 MONTHS ENDING 10/31/12							
		.....CURRENT.....			.....YEAR-TO-DATE.....			ANNUAL	UNREALIZED
	OBJ/SUB	ESTIMATED	ACTUAL	%REV	ESTIMATED	ACTUAL	%REV	ESTIMATE	BALANCE
MOBILE ST. PKG.LOT #2	3417 05								
BATSON STREET PKG. LO	3417 06								
HEMPHILL PKG. LOT	3417 07	150	300	200%	150	300	200%	1,800	1,500
EAST PINE PKG.LOT	3417 08	37			37			450	450
OTHER	3417 09								
	---	---	---	---	---	---	---	---	---
PARKING SPACES		**2,462**	**2,235**	**90%**	**2,462**	**2,235**	**90%**	**29,550**	**27,315**
EQUIPMENT	3419								
	---	---	---	---	---	---	---	---	---
RENTS AND ROYALTIES		**9,329**	**8,233**	**88%**	**9,329**	**8,233**	**88%**	**111,950**	**103,718**
CEMETERY FEES	3420	2,416	3,960	163%	2,416	3,960	163%	29,000	25,040
CONTRIBUTIONS-PUBLIC	3450								
CONTRIB-GORDONS CRK STU	3450 01								
CONTRIB-REV 911 MINUTES	3450 02		5,000			5,000			(5,000)
CONTRIB-MDTWN STDY MAT	3458								
CONTRIBUTIONS-OTHER	3459								
	---	---	---	---	---	---	---	---	---
CONTRIB-REV 911 MINU			**5,000**			**5,000**			**(5,000)**
CONTRIBUTIONS-PRIVATE	3460								
CONTRIB-EUREKA SCHOOL	3461								
CONTRIB-NCBM-BROWNFIEL	3462								
CONTRIB-SENIOR FARE	3463								
CONTRIB-MAYOR'S YOUTH	3464								
CONTRIB-BC HEALTHY HOM	3465								
CONTRIB-NIGHT OUT AGAI	3466	450			450			5,400	5,400
CONTRIB-MDTWN STDY MAT	3468								
CONTRIB-OTHER	3469								
	---	---	---	---	---	---	---	---	---
CONTRIBUTIONS-PRIVAT		**450**			**450**			**5,400**	**5,400**
POLICE DEPT-MISC CHARGE	3590	4,166	1,735	41%	4,166	1,735	41%	50,000	48,265
OTHER MISC. REVENUE	3599								
	---	---	---	---	---	---	---	---	---
MISCELLANEOUS		**16,695**	**19,374**	**116%**	**16,695**	**19,374**	**116%**	**200,350**	**180,976**
TRANSFERS	380A								
TRANSFERS FROM OTHR FND	3800								
T/F H'BURG REDEV.AUTH.	3800 101								

		CITY OF HATTIESBURG							. 1
001001 - GENERAL FUND REVENUES		REVENUE REPORT							11/1/12
		1 MONTHS ENDING 10/31/12							
		.....CURRENT.....			.....YEAR-TO-DATE.....			ANNUAL	UNREALIZED
	OBJ/SUB	ESTIMATED	ACTUAL	%REV	ESTIMATED	ACTUAL	%REV	ESTIMATE	BALANCE
T/F GOVERNMENT COMPLEX	3800 104								
T/F 2002 USA YEAST/LAG	3800 106								
T/F SPEC.SALES TAX	3800 107								
T/F WATER & SEWER	3800 11	36,039	4,790	13%	36,039	4,790	13%	432,475	427,685
T/F POL.FORFEITURES	3800 19								
T/F POL.FORF O/T(HURR	3800 19HR								
T/F '03 TIF B&I CHAUVE	3800 22								
T/F TAX COLLECTORS-GPT	3800 27	1,023,750	87,200	8%	1,023,750	87,200	8%	12,285,000	12,197,800
T/F TAX COLL-C.C.FEE	3800 27CC								
T/F TAX COLL-EXCESS BI	3800 27EB	3,166			3,166			38,000	38,000
T/F TAX COLL-CHKG INT	3800 27ICHK	333			333			4,000	4,000
T/F TAX COLL-INT/PEN	3800 27IP	26,666	31,087	116%	26,666	31,087	116%	320,000	288,913
T/F W & S CONSTRUCTION	3800 75								
T/F COM.DEV.BLK.GRANT	3800 82								
T/F INDUSTRIAL PARK DE	3800 87								
T/F 2007 TIF CONST-TUR	3800 91								
T/F 2001 STREETS,SWRS,	3800 95								
	----------	----------	---------	----	----------	---------	----	----------	----------
TRANSFERS FROM OTHR		**1,089,956**	**123,076**	**11%**	**1,089,956**	**123,076**	**11%**	**13,079,475**	**12,956,399**
	----------	----------	---------	----	----------	---------	----	----------	----------
TRANSFERS		**1,089,956**	**123,076**	**11%**	**1,089,956**	**123,076**	**11%**	**13,079,475**	**12,956,399**
NON-REVENUE RECEIPTS	390A								
SALE OF BONDS	3910								
BOND PROCEEDS	3912								
ACCRUED INT-BONDS	3915								
	----------	----------	---------	----	----------	---------	----	----------	----------
SALE OF BONDS									
SALE OF REAL ESTATE	3920								
SALE OF TIMBER	3923								
SALE OF EASEMENTS	3925								
SALE OF CEMETERY LOTS	3930	3,750	2,625	70%	3,750	2,625	70%	45,000	42,375
SALE OF EQUIPMENT	3940	4,166			4,166			50,000	50,000
SALE OF SCRAP MATERIAL	3943	250			250			3,000	3,000
SALE OF MISC. ITEMS	3945								
SALE OF MAPS/PUBLICATIO	3947		63			63			(63)
SALE OF RECYCLABLE ITEM	3948								
MDB LOAN PYMT-HUB CITY	3950	10,283			10,283			123,400	123,400

		CITY OF HATTIESBURG							. 1
001001 - GENERAL FUND REVENUES		REVENUE REPORT							11/1/12
		1 MONTHS ENDING 10/31/12							
		.....CURRENT.....			.....YEAR-TO-DATE.....			ANNUAL	UNREALIZED
	OBJ/SUB	ESTIMATED	ACTUAL	%REV	ESTIMATED	ACTUAL	%REV	ESTIMATE	BALANCE
KERR MAGEE PROJECT	3960								
MS TANK PROJECT	3961								
INSURANCE REIMB-STORM	3962	25,000			25,000			300,000	300,000
VENDING COMM./REFUNDS	3964								
REFUND & RECOVERY	3965	1,666	33,732	2024%	1,666	33,732	2024%	20,000	(13,732)
RECOVERY OF DAMAGE CLAI	3967								
REFUND/RECOVERY-INFO SY	3968								
RECOVERY-PERS SERV/EQUI	3969								
CAPITAL LEASE PROCEEDS	3970	40,000			40,000			480,000	480,000
TIF DEPOSIT/PROCEEDS	3971								
NOTE PROCEEDS	3975								
FIRE STATION (MDB)	3975 03								
CHURCH PROJ (MDB)	3975 07								
	----------	----------	---------	----	----------	---------	----	----------	----------
NOTE PROCEEDS									
	----------	----------	---------	----	----------	---------	----	----------	----------
NON-REVENUE RECEIPTS		**85,116**	**36,420**	**42%**	**85,116**	**36,420**	**42%**	**1,021,400**	**984,980**
BEGINNING CASH BALANCE	399A								
APPROPRIABLE FUND BALAN	3999	383,333			383,333			4,600,000	4,600,000
	----------	----------	---------	----	----------	---------	----	----------	----------
BEGINNING CASH BALANC		**383,333**			**383,333**			**4,600,000**	**4,600,000**
	----------	----------	---------	----	----------	---------	----	----------	----------
REVENUES		**4,076,709**	**3,087,220**	**75%**	**4,076,709**	**3,087,220**	**75%**	**48,920,516**	**45,833,296**

		CITY OF HATTIESBURG							. 7
002002 - PKS/REC FUND REVENUES		REVENUE REPORT							11/1/12
		1 MONTHS ENDING 10/31/12							
		.....CURRENT.....			.....YEAR-TO-DATE.....			ANNUAL	UNREALIZED
	OBJ/SUB	ESTIMATED	ACTUAL	%REV	ESTIMATED	ACTUAL	%REV	ESTIMATE	BALANCE
REVENUES	200								
LICENSES, PERMITS & FEES	220A								
OTHER PERMITS & FEES	2230								
NSF CHECK FEE	2290								
	---	---	---	---	---	---	---	---	---
OTHER PERMITS & FEES									
	---	---	---	---	---	---	---	---	---
LICENSES, PERMITS & F									
INTER-GOVERNMNTL REVENUE	230A								
FEDERAL GRANTS	230B								
FEMA RELIEF	2337								
MISC FEDERAL GRANTS	2339								
NATL PARK SER/LAND WTR	2351								
	---	---	---	---	---	---	---	---	---
FEDERAL GRANTS									
STATE GRANTS	250B								
MDOT-INTERCHANGE ENHANC	2508								
DISASTER RELIEF	2545								
	---	---	---	---	---	---	---	---	---
STATE GRANTS									
CITY/COUNTY SHARED REVEN	270B								
MISCELLANEOUS GRANTS	2740								
PEOPLES PARK	2740 01								
THAMES SCHOOL	2740 02								
SUMMER DAY CAMP	2740 03	5,216			5,216			62,603	62,603
OTHER	2740 99								
	---	---	---	---	---	---	---	---	---
MISCELLANEOUS GRANTS		**5,216**			**5,216**			**62,603**	**62,603**
	---	---	---	---	---	---	---	---	---
CITY/COUNTY SHARED RE		**5,216**			**5,216**			**62,603**	**62,603**
CHARGES FOR SERVICES	280A								
WORKSHOP TRNG FEES	2892								
CULTURE AND RECREATION	3100								
SWIM FEES-C.E. ROY/5TH	3110	50			50			600	600
SWIM FEES-DAHMER PARK	3112	100			100			1,200	1,200
SWIM FEES-REC. CTR. PO	3115	100			100			1,200	1,200
ADULT GOLF FEES	3117								

		CITY OF HATTIESBURG							. 7
002002 - PKS/REC FUND REVENUES		REVENUE REPORT							11/1/12
		1 MONTHS ENDING 10/31/12							
		.....CURRENT.....			.....YEAR-TO-DATE.....			ANNUAL	UNREALIZED
	OBJ/SUB	ESTIMATED	ACTUAL	%REV	ESTIMATED	ACTUAL	%REV	ESTIMATE	BALANCE
TENNIS FEES	3118								
FENCING FEES	3119								
PLAYGROUND FEES	3120								
SUMMER DAY CAMP	3122								
KAMPER PARK CONCESSION	3130								
BALLPARK CONCESSIONS	3131	541			541			6,500	6,500
CERAMIC CONCESSIONS	3134								
KPZ GIFT SHOP CONCESSI	3135								
ZOO ADMISSIONS	3137								
TATUM PK PAVILION USE	3138								
EASTSIDE PK PAVILION U	3139	16	80	500%	16	80	500%	200	120
MCNAIR REC CTR USE FEE	3140								
KPZ PAVILION USE FEE	3145								
DAHMER PAVILION USE FE	3147	66	80	121%	66	80	121%	800	720
KP ED CENTER USE FEE	3149								
BALLFIELD USE FEES	3150	416	75	18%	416	75	18%	5,000	4,925
PARKS-MISC USE FEES	3151	58	940	1620%	58	940	1620%	700	(240)
YOUTH TEAM FEES	3160								
FLAG FOOTBALL	3160 01								
LITTLE TIGERS BASKETB	3160 02	41			41			500	500
JUNIOR GOLF FEES	3160 03								
T-BALL	3160 05								
GIRLS' SOFTBALL	3160 06								
BOYS' SOFTBALL	3160 07								
GIRLS FASTPITCH	3160 10								
BOYS FASTPITCH	3160 11								
TACKLE FOOTBALL	3160 15								
	----------	----------	---------	----	----------	---------	----	----------	----------
YOUTH TEAM FEES		**41**			**41**			**500**	**500**
ADULT TEAM FEES	3162								
CHURCH LEAGUE BASKETB	3162 01								
ADULT BASKETBALL	3162 02	291			291			3,500	3,500
ADULT CO-ED SOFTBALL	3162 03	250			250			3,000	3,000
ADULT MEN'S SOFTBALL	3162 04	666	500	75%	666	500	75%	8,000	7,500
ADULT WOMEN'S SOFTBAL	3162 05								
ADULT FOOTBALL	3162 06								

		CITY OF HATTIESBURG							. 7
002002 - PKS/REC FUND REVENUES		REVENUE REPORT							11/1/12
		1 MONTHS ENDING 10/31/12							
		.....CURRENT.....			.....YEAR-TO-DATE.....			ANNUAL	UNREALIZED
	OBJ/SUB	ESTIMATED	ACTUAL	%REV	ESTIMATED	ACTUAL	%REV	ESTIMATE	BALANCE
ADULT SOFTBALL-CHURCH	3162 07	333			333			4,000	4,000
ADULT SOCCER	3162 08	350			350			4,200	4,200
ADULT FLAG FOOTBALL	3162 09	83			83			1,000	1,000
	---	---	---	---	---	---	---	---	---
ADULT TEAM FEES		**1,975**	**500**	**25%**	**1,975**	**500**	**25%**	**23,700**	**23,200**
CERAMICS CLASS FEES	3170								
DRAMA,ART,DANCE LESSON	3178								
"MOKEY" TRAIN RIDES	3181								
CAROUSEL RIDES	3185								
OTHER	3190								
	---	---	---	---	---	---	---	---	---
CULTURE AND RECREATI		**3,366**	**1,675**	**49%**	**3,366**	**1,675**	**49%**	**40,400**	**38,725**
	---	---	---	---	---	---	---	---	---
CHARGES FOR SERVICES		**3,366**	**1,675**	**49%**	**3,366**	**1,675**	**49%**	**40,400**	**38,725**
MISCELLANEOUS	340A								
INTEREST EARNINGS	3400								
CERTIFICATES OF DEPOSI	3402								
SAVINGS ACCOUNT/MMA	3405	33	19	57%	33	19	57%	400	381
	---	---	---	---	---	---	---	---	---
INTEREST EARNINGS		**33**	**19**	**57%**	**33**	**19**	**57%**	**400**	**381**
CONTRIBUTIONS-PUBLIC	3450								
CONTRIBUTIONS-FORREST	3455	5,833			5,833			70,000	70,000
	---	---	---	---	---	---	---	---	---
CONTRIBUTIONS-PUBLIC		**5,833**			**5,833**			**70,000**	**70,000**
CONTRIBUTIONS-PRIVATE	3460								
CONTRIB-POLICEMAN'S BE	3461								
CONTRIB-SENIOR FARE	3463								
CONTRIB-OTHER	3469	833			833			10,000	10,000
	---	---	---	---	---	---	---	---	---
CONTRIBUTIONS-PRIVAT		**833**			**833**			**10,000**	**10,000**
	---	---	---	---	---	---	---	---	---
MISCELLANEOUS		**6,700**	**19**		**6,700**	**19**		**80,400**	**80,381**
TRANSFERS	380A								
TRANSFERS FROM OTHR FND	3800								
T/F GENERAL FUND	3800 01	175,186			175,186			2,102,234	2,102,234
T/F TAX COLLECTORS-GPT	3800 27	66,666	5,629	8%	66,666	5,629	8%	800,000	794,371
	---	---	---	---	---	---	---	---	---

		CITY OF HATTIESBURG							. 7
002002 - PKS/REC FUND REVENUES		REVENUE REPORT							11/1/12
		1 MONTHS ENDING 10/31/12							
		.....CURRENT.....			.....YEAR-TO-DATE.....			ANNUAL	UNREALIZED
	OBJ/SUB	ESTIMATED	ACTUAL	%REV	ESTIMATED	ACTUAL	%REV	ESTIMATE	BALANCE
TRANSFERS FROM OTHR		**241,852**	**5,629**	**2%**	**241,852**	**5,629**	**2%**	**2,902,234**	**2,896,605**
	---	---	---	---	---	---	---	---	---
TRANSFERS		**241,852**	**5,629**	**2%**	**241,852**	**5,629**	**2%**	**2,902,234**	**2,896,605**
NON-REVENUE RECEIPTS	390A								
SALE OF EQUIPMENT	3940								
SALE OF MISC. ITEMS	3945								
COMM.-HOT DIGGITY CONCE	3963								
VENDING COMM./REFUNDS	3964								
REFUND & RECOVERY	3965								
RECOVERY OF DAMAGE CLAI	3967								
	---	---	---	---	---	---	---	---	---
NON-REVENUE RECEIPTS									
BEGINNING CASH BALANCE	399A								
APPROPRIABLE FUND BALAN	3999	8,333			8,333			100,000	100,000
	---	---	---	---	---	---	---	---	---
BEGINNING CASH BALANC		**8,333**			**8,333**			**100,000**	**100,000**
	---	---	---	---	---	---	---	---	---
REVENUES		**265,469**	**7,323**	**2%**	**265,469**	**7,323**	**2%**	**3,185,637**	**3,178,314**

		CITY OF HATTIESBURG							. 10
004004 - LIBRARY FUND REVENUES		REVENUE REPORT							11/1/12
		1 MONTHS ENDING 10/31/12							
		.....CURRENT.....			.....YEAR-TO-DATE.....			ANNUAL	UNREALIZED
	OBJ/SUB	ESTIMATED	ACTUAL	%REV	ESTIMATED	ACTUAL	%REV	ESTIMATE	BALANCE
REVENUES	200								
TRANSFERS	380A								
TRANSFERS FROM OTHR FND	3800								
T/F TAX COLLECTORS-GPT	3800 27		5,483			5,483			(5,483)
	---	---	---	---	---	---	---	---	---
TRANSFERS FROM OTHR			**5,483**			**5,483**			**(5,483)**
	---	---	---	---	---	---	---	---	---
TRANSFERS			**5,483**			**5,483**			**(5,483)**
	---	---	---	---	---	---	---	---	---
REVENUES			**5,483**			**5,483**			**(5,483)**

		CITY OF HATTIESBURG							. 11
005005 - H.M.F.P.FUND REVENUES		REVENUE REPORT							11/1/12
		1 MONTHS ENDING 10/31/12							
		.....CURRENT.....			.....YEAR-TO-DATE.....			ANNUAL	UNREALIZED
	OBJ/SUB	ESTIMATED	ACTUAL	%REV	ESTIMATED	ACTUAL	%REV	ESTIMATE	BALANCE
REVENUES	200								
INTER-GOVERNMNTL REVENUE	230A								
STATE-SHARED REVENUE	260B								
PRO-RATA FIRE INS. PREM	2620	19,583			19,583			235,000	235,000
FIRE INS REBATE/CODE EN	2625								
	---	---	---	---	---	---	---	---	---
STATE-SHARED REVENUE		**19,583**			**19,583**			**235,000**	**235,000**
CHARGES FOR SERVICES	280A								
PUBLIC SAFETY	2850								
FIRE PROT.SHARE-USM	2862	7,971	95,652	1200%	7,971	95,652	1200%	95,652	
HAZ.MAT.TRAINING FEES	2885								
	---	---	---	---	---	---	---	---	---
PUBLIC SAFETY		**7,971**	**95,652**	**1200%**	**7,971**	**95,652**	**1200%**	**95,652**	
	---	---	---	---	---	---	---	---	---
CHARGES FOR SERVICES		**7,971**	**95,652**	**1200%**	**7,971**	**95,652**	**1200%**	**95,652**	
FINES AND FORFEITS	330A								
FIRE CODE VIOLATIONS	3325	125	854	683%	125	854	683%	1,500	646
	---	---	---	---	---	---	---	---	---
FINES AND FORFEITS		**125**	**854**	**683%**	**125**	**854**	**683%**	**1,500**	**646**
MISCELLANEOUS	340A								
INTEREST EARNINGS	3400								
CERTIFICATES OF DEPOSI	3402								
SAVINGS ACCOUNT/MMA	3405	458	348	75%	458	348	75%	5,500	5,152
	---	---	---	---	---	---	---	---	---
INTEREST EARNINGS		**458**	**348**	**75%**	**458**	**348**	**75%**	**5,500**	**5,152**
CONTRIBUTIONS-PRIVATE	3460								
CONTRIB-OTHER	3469	416	300	72%	416	300	72%	5,000	4,700
	---	---	---	---	---	---	---	---	---
CONTRIBUTIONS-PRIVAT		**416**	**300**	**72%**	**416**	**300**	**72%**	**5,000**	**4,700**
	---	---	---	---	---	---	---	---	---
MISCELLANEOUS		**875**	**648**	**74%**	**875**	**648**	**74%**	**10,500**	**9,852**
TRANSFERS	380A								
TRANSFERS FROM OTHR FND	3800								
T/F GENERAL FUND	3800 01								
	---	---	---	---	---	---	---	---	---
TRANSFERS FROM OTHR									
	---	---	---	---	---	---	---	---	---

		CITY OF HATTIESBURG							. 11
005005 - H.M.F.P.FUND REVENUES		REVENUE REPORT							11/1/12
		1 MONTHS ENDING 10/31/12							
		.....CURRENT.....			.....YEAR-TO-DATE.....			ANNUAL	UNREALIZED
	OBJ/SUB	ESTIMATED	ACTUAL	%REV	ESTIMATED	ACTUAL	%REV	ESTIMATE	BALANCE
TRANSFERS									
NON-REVENUE RECEIPTS	390A								
SALE OF REAL ESTATE	3920								
SALE OF EQUIPMENT	3940								
INSURANCE REIMB-STORM	3962								
REFUND & RECOVERY	3965								
CAPITAL LEASE PROCEEDS	3970								
NOTE PROCEEDS	3975								
FIRE STATION	3975 03								
	----------	----------	---------	----	----------	---------	----	----------	----------
NOTE PROCEEDS									
	----------	----------	---------	----	----------	---------	----	----------	----------
NON-REVENUE RECEIPTS									
BEGINNING CASH BALANCE	399A								
APPROPRIABLE FUND BALAN	3999	67,083			67,083			805,000	805,000
	----------	----------	---------	----	----------	---------	----	----------	----------
BEGINNING CASH BALANC		**67,083**			**67,083**			**805,000**	**805,000**
	----------	----------	---------	----	----------	---------	----	----------	----------
REVENUES		**95,637**	**97,154**	**101%**	**95,637**	**97,154**	**101%**	**1,147,652**	**1,050,498**

		CITY OF HATTIESBURG							. 12
008008 - SPEC.ST.IMPR REVENUES		REVENUE REPORT							11/1/12
		1 MONTHS ENDING 10/31/12							
		.....CURRENT.....			.....YEAR-TO-DATE.....			ANNUAL	UNREALIZED
	OBJ/SUB	ESTIMATED	ACTUAL	%REV	ESTIMATED	ACTUAL	%REV	ESTIMATE	BALANCE
REVENUES	200								
INTER-GOVERNMNTL REVENUE	230A								
FEDERAL GRANTS	230B								
FAUS GRANT(LINC#1)	2331								
FAUS GRANT(LINC#2)	2332								
FAUS GRANT(CLASSIC DR)	2334								
FAUS GRANT(S.28TH)	2335								
FAUS GRANT(LINC#4)	2336								
	---	---	---	---	---	---	---	---	---
FEDERAL GRANTS									
STATE-SHARED REVENUE	260B								
MUNICIPAL AID	2650	4,583			4,583			55,000	55,000
	---	---	---	---	---	---	---	---	---
STATE-SHARED REVENUE		**4,583**			**4,583**			**55,000**	**55,000**
MISCELLANEOUS	340A								
INTEREST EARNINGS	3400								
CERTIFICATES OF DEPOSI	3402								
SAVINGS ACCOUNT/MMA	3405	83	93	112%	83	93	112%	1,000	907
	---	---	---	---	---	---	---	---	---
INTEREST EARNINGS		**83**	**93**	**112%**	**83**	**93**	**112%**	**1,000**	**907**
CONTRIBUTIONS-PUBLIC	3450								
CONTRIB-USM-CLASSIC DR	3452								
CONTRIBUTIONS-FORREST	3455								
	---	---	---	---	---	---	---	---	---
CONTRIBUTIONS-PUBLIC									
	---	---	---	---	---	---	---	---	---
MISCELLANEOUS		**83**	**93**	**112%**	**83**	**93**	**112%**	**1,000**	**907**
TRANSFERS	380A								
TRANSFERS FROM OTHR FND	3800								
T/F GENERAL FUND	3800 01								
T/F '99 TAX INCR CONST	3800 103								
T/F '93 STREETS,DRAINS	3800 110								
T/F MUN.ROAD & BRIDGE	3800 72								
T/F '92 PARKS,REC,STS.	3800 97								
	---	---	---	---	---	---	---	---	---
TRANSFERS FROM OTHR									
	---	---	---	---	---	---	---	---	---

		CITY OF HATTIESBURG						.	12
008008 - SPEC.ST.IMPR REVENUES		REVENUE REPORT							11/1/12
		1 MONTHS ENDING 10/31/12							
		.....CURRENT.....			.....YEAR-TO-DATE.....			ANNUAL	UNREALIZED
	OBJ/SUB	ESTIMATED	ACTUAL	%REV	ESTIMATED	ACTUAL	%REV	ESTIMATE	BALANCE
TRANSFERS									
NON-REVENUE RECEIPTS	390A								
REFUND & RECOVERY	3965								
TIF DEPOSIT/PROCEEDS	3971								
	---	---	---	---	---	---	---	---	---
NON-REVENUE RECEIPTS									
BEGINNING CASH BALANCE	399A								
APPROPRIABLE FUND BALAN	3999	17,083			17,083			205,000	205,000
	---	---	---	---	---	---	---	---	---
BEGINNING CASH BALANC		**17,083**			**17,083**			**205,000**	**205,000**
	---	---	---	---	---	---	---	---	---
REVENUES		**21,750**	**93**		**21,750**	**93**		**261,000**	**260,907**

		CITY OF HATTIESBURG							. 13
009009 - W&S O&M REVENUES		REVENUE REPORT							11/1/12
		1 MONTHS ENDING 10/31/12							
		.....CURRENT.....			.....YEAR-TO-DATE.....			ANNUAL	UNREALIZED
	OBJ/SUB	ESTIMATED	ACTUAL	%REV	ESTIMATED	ACTUAL	%REV	ESTIMATE	BALANCE
REVENUES	200								
INTER-GOVERNMNTL REVENUE	230A								
FEDERAL GRANTS	230B								
CHARGES FOR SERVICES	280A								
SANITATION	2950								
LAGOON DUMPING	2955	1,666	2,025	121%	1,666	2,025	121%	20,000	17,975
	---	---	---	---	---	---	---	---	---
SANITATION		**1,666**	**2,025**	**121%**	**1,666**	**2,025**	**121%**	**20,000**	**17,975**
	---	---	---	---	---	---	---	---	---
CHARGES FOR SERVICES		**1,666**	**2,025**	**121%**	**1,666**	**2,025**	**121%**	**20,000**	**17,975**
MISCELLANEOUS	340A								
INTEREST EARNINGS	3400								
CERTIFICATES OF DEPOSI	3402								
SAVINGS ACCOUNT/MMA	3405	250	298	119%	250	298	119%	3,000	2,702
OTHER INTEREST-MMA	3407								
	---	---	---	---	---	---	---	---	---
INTEREST EARNINGS		**250**	**298**	**119%**	**250**	**298**	**119%**	**3,000**	**2,702**
RENTS AND ROYALTIES	3410								
EQUIPMENT	3419								
	---	---	---	---	---	---	---	---	---
RENTS AND ROYALTIES									
	---	---	---	---	---	---	---	---	---
MISCELLANEOUS		**250**	**298**	**119%**	**250**	**298**	**119%**	**3,000**	**2,702**
ENTERPRISE ACCOUNTS	360A								
TAPS	3610								
SEWERAGE TREATMENT	3720								
METER RELOCATION	3730								
MISCELLANEOUS	3790								
	---	---	---	---	---	---	---	---	---
ENTERPRISE ACCOUNTS									
TRANSFERS	380A								
TRANSFERS FROM OTHR FND	3800								
T/F WATER & SEWER B&I	3800 10								
T/F WATER & SEWER	3800 11	664,357	664,358	100%	664,357	664,358	100%	7,972,295	7,307,937
T/F CUSTOMER METER	3800 24								
	---	---	---	---	---	---	---	---	---
TRANSFERS FROM OTHR		**664,357**	**664,358**	**100%**	**664,357**	**664,358**	**100%**	**7,972,295**	**7,307,937**

		CITY OF HATTIESBURG							. 13
009009 - W&S O&M REVENUES		REVENUE REPORT							11/1/12
		1 MONTHS ENDING 10/31/12							
		.....CURRENT.....			.....YEAR-TO-DATE.....			ANNUAL	UNREALIZED
	OBJ/SUB	ESTIMATED	ACTUAL	%REV	ESTIMATED	ACTUAL	%REV	ESTIMATE	BALANCE
	---	---	---	---	---	---	---	---	---
TRANSFERS		**664,357**	**664,358**	**100%**	**664,357**	**664,358**	**100%**	**7,972,295**	**7,307,937**
NON-REVENUE RECEIPTS	390A								
SALE OF EQUIPMENT	3940								
SALE OF SCRAP MATERIAL	3943		1,769			1,769			(1,769)
SALE OF MISC. ITEMS	3945								
REFUND & RECOVERY	3965								
RECOVERY OF DAMAGE CLAI	3967								
CAPITAL LEASE PROCEEDS	3970								
	---	---	---	---	---	---	---	---	---
NON-REVENUE RECEIPTS			**1,769**			**1,769**			**(1,769)**
BEGINNING CASH BALANCE	399A								
APPROPRIABLE FUND BALAN	3999	41,666			41,666			500,000	500,000
	---	---	---	---	---	---	---	---	---
BEGINNING CASH BALANC		**41,666**			**41,666**			**500,000**	**500,000**
	---	---	---	---	---	---	---	---	---
REVENUES		**707,941**	**668,450**	**94%**	**707,941**	**668,450**	**94%**	**8,495,295**	**7,826,845**

		CITY OF HATTIESBURG							. 14
010010 - W&S B&I REVENUES		REVENUE REPORT							11/1/12
		1 MONTHS ENDING 10/31/12							
		.....CURRENT.....			.....YEAR-TO-DATE.....			ANNUAL	UNREALIZED
	OBJ/SUB	ESTIMATED	ACTUAL	%REV	ESTIMATED	ACTUAL	%REV	ESTIMATE	BALANCE
REVENUES	200								
MISCELLANEOUS	340A								
INTEREST EARNINGS	3400								
CERTIFICATES OF DEPOSI	3402								
SAVINGS ACCOUNT/MMA	3405		55			55			(55)
OTHER INTEREST-MMA	3407		7			7			(7)
TREASURY NOTES	3409								
	---	---	---	---	---	---	---	---	---
INTEREST EARNINGS			**62**			**62**			**(62)**
	---	---	---	---	---	---	---	---	---
MISCELLANEOUS			**62**			**62**			**(62)**
TRANSFERS	380A								
TRANSFERS FROM OTHR FND	3800								
T/F '06 W&S BOND CONST	3800 105								
T/F WATER & SEWER	3800 11								
T/F WATER & SEWER '06	3800 11A	158,558	158,558	100%	158,558	158,558	100%	1,902,700	1,744,142
T/F WATER & SEWER '12	3800 11B	73,480	73,480	100%	73,480	73,480	100%	881,760	808,280
T/F WTR/SWR(METER GO)	3800 11M	75,000	75,000	100%	75,000	75,000	100%	900,000	825,000
T/F W & S CONTINGENCY	3800 17								
T/F '12 W&S REV BOND C	3800 94								
	---	---	---	---	---	---	---	---	---
TRANSFERS FROM OTHR		**307,038**	**307,038**	**100%**	**307,038**	**307,038**	**100%**	**3,684,460**	**3,377,422**
	---	---	---	---	---	---	---	---	---
TRANSFERS		**307,038**	**307,038**	**100%**	**307,038**	**307,038**	**100%**	**3,684,460**	**3,377,422**
NON-REVENUE RECEIPTS	390A								
SALE OF BONDS	3910								
BOND PREMIUM	3913								
ACCRUED INTEREST	3915								
	---	---	---	---	---	---	---	---	---
SALE OF BONDS									
	---	---	---	---	---	---	---	---	---
NON-REVENUE RECEIPTS									
BEGINNING CASH BALANCE	399A								
APPROPRIABLE FUND BALAN	3999	33,333			33,333			400,000	400,000
	---	---	---	---	---	---	---	---	---
BEGINNING CASH BALANC		**33,333**			**33,333**			**400,000**	**400,000**
	---	---	---	---	---	---	---	---	---

		CITY OF HATTIESBURG							. 14
010010 - W&S B&I REVENUES		REVENUE REPORT							11/1/12
		1 MONTHS ENDING 10/31/12							
		.....CURRENT.....			.....YEAR-TO-DATE.....			ANNUAL	UNREALIZED
	OBJ/SUB	ESTIMATED	ACTUAL	%REV	ESTIMATED	ACTUAL	%REV	ESTIMATE	BALANCE
REVENUES		**340,371**	**307,100**	**90%**	**340,371**	**307,100**	**90%**	**4,084,460**	**3,777,360**

		CITY OF HATTIESBURG							. 15
011011 - WATER & SEWER REVENUES		REVENUE REPORT							11/1/12
		1 MONTHS ENDING 10/31/12							
		.....CURRENT.....			.....YEAR-TO-DATE.....			ANNUAL	UNREALIZED
	OBJ/SUB	ESTIMATED	ACTUAL	%REV	ESTIMATED	ACTUAL	%REV	ESTIMATE	BALANCE
REVENUES	200								
LICENSES, PERMITS & FEES	220A								
OTHER PERMITS & FEES	2230								
NSF CHECK FEE	2290	416	280	67%	416	280	67%	5,000	4,720
	---	---	---	---	---	---	---	---	---
OTHER PERMITS & FEES		**416**	**280**	**67%**	**416**	**280**	**67%**	**5,000**	**4,720**
	---	---	---	---	---	---	---	---	---
LICENSES, PERMITS & F		**416**	**280**	**67%**	**416**	**280**	**67%**	**5,000**	**4,720**
MISCELLANEOUS	340A								
INTEREST EARNINGS	3400								
CERTIFICATES OF DEPOSI	3402								
SAVINGS ACCOUNT/MMA	3405	208	243	116%	208	243	116%	2,500	2,257
	---	---	---	---	---	---	---	---	---
INTEREST EARNINGS		**208**	**243**	**116%**	**208**	**243**	**116%**	**2,500**	**2,257**
	---	---	---	---	---	---	---	---	---
MISCELLANEOUS		**208**	**243**	**116%**	**208**	**243**	**116%**	**2,500**	**2,257**
ENTERPRISE ACCOUNTS	360A								
METERED WATER SALES	3600								
RESIDENTIAL WATER-NO T	3600 01	295,333	387,325	131%	295,333	387,325	131%	3,544,000	3,156,675
NON-RESIDENTIAL WATER	3600 011	65,416	120,347	183%	65,416	120,347	183%	785,000	664,653
TAXABLE WATER SALES	3600 02	165,750	207,364	125%	165,750	207,364	125%	1,989,000	1,781,636
TAXABLE WATER-USA YEAS	3600 03	146,416	24,218	16%	146,416	24,218	16%	1,757,000	1,732,782
	---	---	---	---	---	---	---	---	---
METERED WATER SALES		**672,916**	**739,255**	**109%**	**672,916**	**739,255**	**109%**	**8,075,000**	**7,335,746**
WATER TAPS	3610	9,583	61,886	645%	9,583	61,886	645%	115,000	53,114
WATER TURN-ON FEE	3620	5,333	8,370	156%	5,333	8,370	156%	64,000	55,630
SEWER TAPS	3625	1,250	1,905	152%	1,250	1,905	152%	15,000	13,095
SEWER CHARGES	3630								
NON-RESIDENTIAL SEWER	3630 01	141,666	231,942	163%	141,666	231,942	163%	1,700,000	1,468,058
RESIDENTIAL SEWER	3630 02	266,666	341,898	128%	266,666	341,898	128%	3,200,000	2,858,102
LAMAR PARK SEWER	3630 03	16,250	15,355	94%	16,250	15,355	94%	195,000	179,645
MARSHALL DURBIN SEWER	3630 04	30,833			30,833			370,000	370,000
PETAL SEWER	3630 05	25,000	45,887	183%	25,000	45,887	183%	300,000	254,113
HERCULES	3630 06	500	1,307	261%	500	1,307	261%	6,000	4,693
PBRSWMA-LEACHATE	3630 07	333	359	107%	333	359	107%	4,000	3,641
ZEON CHEMICALS	3630 08	3,166	2,435	76%	3,166	2,435	76%	38,000	35,565
USA YEAST SEWER	3630 09	51,250	55,818	108%	51,250	55,818	108%	615,000	559,182

		CITY OF HATTIESBURG							. 15
011011 - WATER & SEWER REVENUES		REVENUE REPORT							11/1/12
		1 MONTHS ENDING 10/31/12							
		.....CURRENT.....			.....YEAR-TO-DATE.....			ANNUAL	UNREALIZED
	OBJ/SUB	ESTIMATED	ACTUAL	%REV	ESTIMATED	ACTUAL	%REV	ESTIMATE	BALANCE
DAIRY FRESH SEWER	3630 10	5,166	6,739	130%	5,166	6,739	130%	62,000	55,261
OTHER SPEC SWR CONTRAC	3630 11		7,977			7,977			(7,977)
	---	---	---	---	---	---	---	---	---
SEWER CHARGES		**540,833**	**709,718**	**131%**	**540,833**	**709,718**	**131%**	**6,490,000**	**5,780,282**
SEWERAGE TREATMENT	3720								
	---	---	---	---	---	---	---	---	---
ENTERPRISE ACCOUNTS		**1,229,916**	**1,521,133**	**123%**	**1,229,916**	**1,521,133**	**123%**	**14,759,000**	**13,237,867**
NON-REVENUE RECEIPTS	390A								
REFUND & RECOVERY	3965								
	---	---	---	---	---	---	---	---	---
NON-REVENUE RECEIPTS									
BEGINNING CASH BALANCE	399A								
APPROPRIABLE FUND BALAN	3999								
	---	---	---	---	---	---	---	---	---
BEGINNING CASH BALANC									
	---	---	---	---	---	---	---	---	---
REVENUES		**1,230,541**	**1,521,657**	**123%**	**1,230,541**	**1,521,657**	**123%**	**14,766,500**	**13,244,843**

		CITY OF HATTIESBURG							. 16
012012 - 1999 TAX INCRE B&I-REVENUES		REVENUE REPORT							11/1/12
		1 MONTHS ENDING 10/31/12							
		.....CURRENT.....			.....YEAR-TO-DATE.....			ANNUAL	UNREALIZED
	OBJ/SUB	ESTIMATED	ACTUAL	%REV	ESTIMATED	ACTUAL	%REV	ESTIMATE	BALANCE
REVENUES	200								
INTER-GOVERNMNTL REVENUE	230A								
CITY/COUNTY-SHARED REVEN	270B								
FORREST CTY	2705								
	---	---	---	---	---	---	---	---	---
CITY/COUNTY-SHARED RE									
MISCELLANEOUS	340A								
INTEREST EARNINGS	3400								
CERTIFICATES OF DEPOSI	3402								
SAVINGS ACCOUNT/MMA	3405		8			8			(8)
OTHER INTEREST	3407								
TREASURY NOTES	3409								
	---	---	---	---	---	---	---	---	---
INTEREST EARNINGS			**8**			**8**			**(8)**
	---	---	---	---	---	---	---	---	---
MISCELLANEOUS			**8**			**8**			**(8)**
TRANSFERS	380A								
TRANSFERS FROM OTHR FND	3800								
T/F '99 TAX INCRE CONS	3800 103								
T/F TAX COLLECTORS-GPT	3800 27	5,515			5,515			66,188	66,188
	---	---	---	---	---	---	---	---	---
TRANSFERS FROM OTHR		**5,515**			**5,515**			**66,188**	**66,188**
	---	---	---	---	---	---	---	---	---
TRANSFERS		**5,515**			**5,515**			**66,188**	**66,188**
NON-REVENUE RECEIPTS	390A								
REFUND & RECOVERY	3965								
	---	---	---	---	---	---	---	---	---
NON-REVENUE RECEIPTS									
BEGINNING CASH BALANCE	399A								
APPROPRIABLE FUND BALAN	3999	6,012			6,012			72,150	72,150
	---	---	---	---	---	---	---	---	---
BEGINNING CASH BALANC		**6,012**			**6,012**			**72,150**	**72,150**
	---	---	---	---	---	---	---	---	---
REVENUES		**11,528**	**8**		**11,528**	**8**		**138,338**	**138,330**

		CITY OF HATTIESBURG							. 17
013013 - CITY B&I REVENUES		REVENUE REPORT							11/1/12
		1 MONTHS ENDING 10/31/12							
		.....CURRENT.....			.....YEAR-TO-DATE.....			ANNUAL	UNREALIZED
	OBJ/SUB	ESTIMATED	ACTUAL	%REV	ESTIMATED	ACTUAL	%REV	ESTIMATE	BALANCE
REVENUES	200								
INTER-GOVERNMNTL REVENUE	230A								
CITY/COUNTY-SHARED REVEN	270B								
PROPERTY TAX DISTR-SUNB	2728								
KOHLER DEBT.SER-FORREST	2730	5,301			5,301			63,617	63,617
	---	---	---	---	---	---	---	---	---
CITY/COUNTY-SHARED RE		**5,301**			**5,301**			**63,617**	**63,617**
MISCELLANEOUS	340A								
INTEREST EARNINGS	3400								
CERTIFICATES OF DEPOSI	3402								
SAVINGS ACCOUNT/MMA	3405	166	219	131%	166	219	131%	2,000	1,781
OTHER INTEREST-MMA	3407								
TREASURY NOTES	3409								
	---	---	---	---	---	---	---	---	---
INTEREST EARNINGS		**166**	**219**	**131%**	**166**	**219**	**131%**	**2,000**	**1,781**
RENTS AND ROYALTIES	3410								
BUILDING	3412								
KOHLER	3412 17								
ABILITYWORKS INC(ALLI	3412 19								
OTHER BLDG. RENT	3412 99								
	---	---	---	---	---	---	---	---	---
BUILDING									
	---	---	---	---	---	---	---	---	---
RENTS AND ROYALTIES									
	---	---	---	---	---	---	---	---	---
MISCELLANEOUS		**166**	**219**	**131%**	**166**	**219**	**131%**	**2,000**	**1,781**
TRANSFERS	380A								
TRANSFERS FROM OTHR FND	3800								
T/F GENERAL FUND	3800 01								
T/F SPEC.SALES TAX	3800 107	10,426	10,427	100%	10,426	10,427	100%	125,119	114,692
T/F TAX COLLECTORS-GPT	3800 27	233,333	20,116	8%	233,333	20,116	8%	2,800,000	2,779,884
T/F INDUSTRIAL PARK DE	3800 87								
T/F IND.PARK (KOHLER)	3800 87K	22,850			22,850			274,211	274,211
T/F IND.PARK (SUNBEAM)	3800 87S								
T/F D/T LIGHTING	3800 90								
	---	---	---	---	---	---	---	---	---
TRANSFERS FROM OTHR		**266,610**	**30,543**	**11%**	**266,610**	**30,543**	**11%**	**3,199,330**	**3,168,787**

		CITY OF HATTIESBURG							. 17
013013 - CITY B&I REVENUES		REVENUE REPORT							11/1/12
		1 MONTHS ENDING 10/31/12							
		.....CURRENT.....			.....YEAR-TO-DATE.....			ANNUAL	UNREALIZED
	OBJ/SUB	ESTIMATED	ACTUAL	%REV	ESTIMATED	ACTUAL	%REV	ESTIMATE	BALANCE
	---	---	---	---	---	---	---	---	---
TRANSFERS		**266,610**	**30,543**	**11%**	**266,610**	**30,543**	**11%**	**3,199,330**	**3,168,787**
NON-REVENUE RECEIPTS	390A								
SALE OF BONDS	3910								
ACCRUED INT-RFDG BONDS	3915								
	---	---	---	---	---	---	---	---	---
SALE OF BONDS									
SALE OF REAL ESTATE-SAC	3920	18,237			18,237			218,850	218,850
REFUND & RECOVERY	3965								
	---	---	---	---	---	---	---	---	---
NON-REVENUE RECEIPTS		**18,237**			**18,237**			**218,850**	**218,850**
BEGINNING CASH BALANCE	399A								
APPROPRIABLE FUND BALAN	3999	263,333			263,333			3,160,000	3,160,000
	---	---	---	---	---	---	---	---	---
BEGINNING CASH BALANC		**263,333**			**263,333**			**3,160,000**	**3,160,000**
	---	---	---	---	---	---	---	---	---
REVENUES		**553,649**	**30,762**	**5%**	**553,649**	**30,762**	**5%**	**6,643,797**	**6,613,035**

		CITY OF HATTIESBURG							. 18
014014 - SCHOOL FUNDREVENUES		REVENUE REPORT							11/1/12
		1 MONTHS ENDING 10/31/12							
		.....CURRENT.....			.....YEAR-TO-DATE.....			ANNUAL	UNREALIZED
	OBJ/SUB	ESTIMATED	ACTUAL	%REV	ESTIMATED	ACTUAL	%REV	ESTIMATE	BALANCE
REVENUES	200								
TRANSFERS	380A								
TRANSFERS FROM OTHR FND	3800								
T/F TAX COLLECTORS-GPT	3800 27		117,489			117,489			(117,489)
T/F TAX COLL-GPT-'88 B	3800 27SB		12,533			12,533			(12,533)
	---	---	---	---	---	---	---	---	---
TRANSFERS FROM OTHR			**130,021**			**130,021**			**(130,021)**
	---	---	---	---	---	---	---	---	---
TRANSFERS			**130,021**			**130,021**			**(130,021)**
	---	---	---	---	---	---	---	---	---
REVENUES			**130,021**			**130,021**			**(130,021)**

		CITY OF HATTIESBURG							. 19
015015 - W&S B&I USAYEAST REVENUES		REVENUE REPORT							11/1/12
		1 MONTHS ENDING 10/31/12							
		.....CURRENT.....			.....YEAR-TO-DATE.....			ANNUAL	UNREALIZED
	OBJ/SUB	ESTIMATED	ACTUAL	%REV	ESTIMATED	ACTUAL	%REV	ESTIMATE	BALANCE
REVENUES	200								
MISCELLANEOUS	340A								
INTEREST EARNINGS	3400								
CERTIFICATES OF DEPOSI	3402								
SAVINGS ACCOUNT/MMA	3405	16	8	50%	16	8	50%	200	192
OTHER INTEREST-MMA	3407								
TREASURY NOTES	3409								
	---	---	---	---	---	---	---	---	---
INTEREST EARNINGS		**16**	**8**	**50%**	**16**	**8**	**50%**	**200**	**192**
	---	---	---	---	---	---	---	---	---
MISCELLANEOUS		**16**	**8**	**50%**	**16**	**8**	**50%**	**200**	**192**
TRANSFERS	380A								
TRANSFERS FROM OTHR FND	3800								
T/F 2002 USA YEAST PRO	3800 106								
T/F WATER & SEWER	3800 11	25,833	25,833	100%	25,833	25,833	100%	310,000	284,167
	---	---	---	---	---	---	---	---	---
TRANSFERS FROM OTHR		**25,833**	**25,833**	**100%**	**25,833**	**25,833**	**100%**	**310,000**	**284,167**
	---	---	---	---	---	---	---	---	---
TRANSFERS		**25,833**	**25,833**	**100%**	**25,833**	**25,833**	**100%**	**310,000**	**284,167**
NON-REVENUE RECEIPTS	390A								
SALE OF BONDS	3910								
BOND PREMIUM	3913								
ACCRUED INT-'02 W&S BO	3915								
	---	---	---	---	---	---	---	---	---
SALE OF BONDS									
REFUND & RECOVERY	3965								
	---	---	---	---	---	---	---	---	---
NON-REVENUE RECEIPTS									
BEGINNING CASH BALANCE	399A								
APPROPRIABLE FUND BALAN	3999	9,166			9,166			110,000	110,000
	---	---	---	---	---	---	---	---	---
BEGINNING CASH BALANC		**9,166**			**9,166**			**110,000**	**110,000**
	---	---	---	---	---	---	---	---	---
REVENUES		**35,016**	**25,842**	**73%**	**35,016**	**25,842**	**73%**	**420,200**	**394,358**

		CITY OF HATTIESBURG							. 20
018018 - P&FD&R REVENUES		REVENUE REPORT							11/1/12
		1 MONTHS ENDING 10/31/12							
		.....CURRENT.....			.....YEAR-TO-DATE.....			ANNUAL	UNREALIZED
	OBJ/SUB	ESTIMATED	ACTUAL	%REV	ESTIMATED	ACTUAL	%REV	ESTIMATE	BALANCE
REVENUES	200								
MISCELLANEOUS	340A								
INTEREST EARNINGS	3400								
SAVINGS ACCOUNT/MMA	3405								
	---	---	---	---	---	---	---	---	---
INTEREST EARNINGS									
P&FD&R EMPLOYEE CONTRIB	3470		1,200			1,200			(1,200)
	---	---	---	---	---	---	---	---	---
MISCELLANEOUS			**1,200**			**1,200**			**(1,200)**
TRANSFERS	380A								
TRANSFERS FROM OTHR FND	3800								
T/F TAX COLLECTORS-GPT	3800 27		13,553			13,553			(13,553)
	---	---	---	---	---	---	---	---	---
TRANSFERS FROM OTHR			**13,553**			**13,553**			**(13,553)**
	---	---	---	---	---	---	---	---	---
TRANSFERS			**13,553**			**13,553**			**(13,553)**
NON-REVENUE RECEIPTS	390A								
REFUND & RECOVERY	3965								
	---	---	---	---	---	---	---	---	---
NON-REVENUE RECEIPTS									
BEGINNING CASH BALANCE	399A								
APPROPRIABLE FUND BALAN	3999								
	---	---	---	---	---	---	---	---	---
BEGINNING CASH BALANC									
	---	---	---	---	---	---	---	---	---
REVENUES			**14,753**			**14,753**			**(14,753)**

		CITY OF HATTIESBURG							. 21
019019 - POL.FORFEITURES REVENUES		REVENUE REPORT							11/1/12
		1 MONTHS ENDING 10/31/12							
		.....CURRENT.....			.....YEAR-TO-DATE.....			ANNUAL	UNREALIZED
	OBJ/SUB	ESTIMATED	ACTUAL	%REV	ESTIMATED	ACTUAL	%REV	ESTIMATE	BALANCE
REVENUES	200								
INTER-GOVERNMNTL REVENUE	230A								
FEDERAL GRANTS	230B								
JUST.-TREAS(ATF)	2306								
JUST.-HURRICANE RELIEF(	2308								
	---	---	---	---	---	---	---	---	---
FEDERAL GRANTS									
STATE GRANTS	250B								
CRIME PREVENTION PROGRA	2516								
PR VOTECH TRAINING	2517								
ATT'Y GEN./TOBACCO REVE	2525								
	---	---	---	---	---	---	---	---	---
STATE GRANTS									
CHARGES FOR SERVICES	280A								
PUBLIC SAFETY	2850								
K-9 TRAINING	2872								
BAD CHECK PROC. FEES	2875		1,730			1,730			(1,730)
DISPATCHER TRNG. FEES	2890								
SWORN TRNG FEES	2891								
NON-SWORN TRNG FEES	2892								
METRO CRIME SCENE FEES	2895								
METRO CRIME SCENE-LAM	2895 01								
METRO CRIME SCENE-PET	2895 02								
METRO CRIME SCENE-FOR	2895 03								
	---	---	---	---	---	---	---	---	---
METRO CRIME SCENE F									
	---	---	---	---	---	---	---	---	---
PUBLIC SAFETY			**1,730**			**1,730**			**(1,730)**
	---	---	---	---	---	---	---	---	---
CHARGES FOR SERVICES			**1,730**			**1,730**			**(1,730)**
FINES AND FORFEITS	330A								
DARE CITY COURT COSTS	3321		3,019			3,019			(3,019)
NARC.FORFEITURES-POLICE	3323		1,212			1,212			(1,212)
FORF-FED(TREAS/IRS/ATF)	3324								
FORF-FED(JUSTICE/DEA)	3326		2,362			2,362			(2,362)
	---	---	---	---	---	---	---	---	---
FINES AND FORFEITS			**6,593**			**6,593**			**(6,593)**

		CITY OF HATTIESBURG							. 21
019019 - POL.FORFEITURES REVENUES		REVENUE REPORT							11/1/12
		1 MONTHS ENDING 10/31/12							
		.....CURRENT.....			.....YEAR-TO-DATE.....			ANNUAL	UNREALIZED
	OBJ/SUB	ESTIMATED	ACTUAL	%REV	ESTIMATED	ACTUAL	%REV	ESTIMATE	BALANCE
MISCELLANEOUS	340A								
INTEREST EARNINGS	3400								
SAVINGS ACCOUNT/MMA	3405		2			2			(2)
	---	---	---	---	---	---	---	---	---
INTEREST EARNINGS			**2**			**2**			**(2)**
CONTRIBUTIONS-PUBLIC	3450								
CONTRIB-LAMAR CNTY	3451								
CONTRIB-USM	3452								
CONTRIB-PETAL	3453								
CONTRIB-METRO CRIME ST	3454								
CONTRIBUTIONS-FORREST	3455								
CONTRIBUTIONS-OTHER	3459								
	---	---	---	---	---	---	---	---	---
CONTRIBUTIONS-PUBLIC									
CONTRIBUTIONS-PRIVATE	3460								
CONTRIB-D.A.R.E.	3461								
CONTRIB-OTHER	3469								
	---	---	---	---	---	---	---	---	---
CONTRIBUTIONS-PRIVAT									
	---	---	---	---	---	---	---	---	---
MISCELLANEOUS			**2**			**2**			**(2)**
TRANSFERS	380A								
TRANSFERS FROM OTHR FND	3800								
T/F GENERAL FUND	3800 01								
	---	---	---	---	---	---	---	---	---
TRANSFERS FROM OTHR									
	---	---	---	---	---	---	---	---	---
TRANSFERS									
NON-REVENUE RECEIPTS	390A								
SALE OF EQUIPMENT	3940								
SALE OF CANINES	3946								
INSURANCE REIMB-STORM	3962								
REFUND & RECOVERY	3965								
	---	---	---	---	---	---	---	---	---
NON-REVENUE RECEIPTS									
BEGINNING CASH BALANCE	399A								

		CITY OF HATTIESBURG							. 21
019019 - POL.FORFEITURES REVENUES		REVENUE REPORT							11/1/12
		1 MONTHS ENDING 10/31/12							
		.....CURRENT.....			.....YEAR-TO-DATE.....			ANNUAL	UNREALIZED
	OBJ/SUB	ESTIMATED	ACTUAL	%REV	ESTIMATED	ACTUAL	%REV	ESTIMATE	BALANCE
APPROPRIABLE FUND BALAN	3999	20,833			20,833			250,000	250,000
	---	---	---	---	---	---	---	---	---
BEGINNING CASH BALANC		**20,833**			**20,833**			**250,000**	**250,000**
	---	---	---	---	---	---	---	---	---
REVENUES		**20,833**	**8,325**	**39%**	**20,833**	**8,325**	**39%**	**250,000**	**241,675**

		CITY OF HATTIESBURG							. 23
020020 - 2002 TIF B&I-S/P REVENUES		REVENUE REPORT							11/1/12
		1 MONTHS ENDING 10/31/12							
		.....CURRENT.....			.....YEAR-TO-DATE.....			ANNUAL	UNREALIZED
	OBJ/SUB	ESTIMATED	ACTUAL	%REV	ESTIMATED	ACTUAL	%REV	ESTIMATE	BALANCE
REVENUES	200								
INTER-GOVERNMNTL REVENUE	230A								
CITY/COUNTY-SHARED REVEN	270B								
FORREST CTY	2705	3,274			3,274			39,294	39,294
	---	---	---	---	---	---	---	---	---
CITY/COUNTY-SHARED RE		**3,274**			**3,274**			**39,294**	**39,294**
MISCELLANEOUS	340A								
INTEREST EARNINGS	3400								
CERTIFICATES OF DEPOSI	3402								
SAVINGS ACCOUNT/MMA	3405		5			5			(5)
OTHER INTEREST	3407								
TREASURY NOTES	3409								
	---	---	---	---	---	---	---	---	---
INTEREST EARNINGS			**5**			**5**			**(5)**
	---	---	---	---	---	---	---	---	---
MISCELLANEOUS			**5**			**5**			**(5)**
TRANSFERS	380A								
TRANSFERS FROM OTHR FND	3800								
T/F TAX COLLECTORS-GPT	3800 27	4,181			4,181			50,181	50,181
T/F '02 TIF CONSTR-SO.	3800 88								
	---	---	---	---	---	---	---	---	---
TRANSFERS FROM OTHR		**4,181**			**4,181**			**50,181**	**50,181**
	---	---	---	---	---	---	---	---	---
TRANSFERS		**4,181**			**4,181**			**50,181**	**50,181**
NON-REVENUE RECEIPTS	390A								
REFUND & RECOVERY	3965								
	---	---	---	---	---	---	---	---	---
NON-REVENUE RECEIPTS									
BEGINNING CASH BALANCE	399A								
APPROPRIABLE FUND BALAN	3999	5,400			5,400			64,800	64,800
	---	---	---	---	---	---	---	---	---
BEGINNING CASH BALANC		**5,400**			**5,400**			**64,800**	**64,800**
	---	---	---	---	---	---	---	---	---
REVENUES		**12,856**	**5**		**12,856**	**5**		**154,275**	**154,270**

		CITY OF HATTIESBURG							. 24
021021 - 2004 TIF B&I-H/D REVENUES		REVENUE REPORT							11/1/12
		1 MONTHS ENDING 10/31/12							
		.....CURRENT.....			.....YEAR-TO-DATE.....			ANNUAL	UNREALIZED
	OBJ/SUB	ESTIMATED	ACTUAL	%REV	ESTIMATED	ACTUAL	%REV	ESTIMATE	BALANCE
REVENUES	200								
INTER-GOVERNMNTL REVENUE	230A								
CITY/COUNTY-SHARED REVEN	270B								
LAMAR CTY	2708	2,182	26,184	1200%	2,182	26,184	1200%	26,184	
	---	---	---	---	---	---	---	---	---
CITY/COUNTY-SHARED RE		**2,182**	**26,184**	**1200%**	**2,182**	**26,184**	**1200%**	**26,184**	
MISCELLANEOUS	340A								
INTEREST EARNINGS	3400								
CERTIFICATES OF DEPOSI	3402								
SAVINGS ACCOUNT/MMA	3405	8	9	112%	8	9	112%	100	91
OTHER INTEREST	3407								
TREASURY NOTES	3409								
	---	---	---	---	---	---	---	---	---
INTEREST EARNINGS		**8**	**9**	**112%**	**8**	**9**	**112%**	**100**	**91**
	---	---	---	---	---	---	---	---	---
MISCELLANEOUS		**8**	**9**	**112%**	**8**	**9**	**112%**	**100**	**91**
TRANSFERS	380A								
TRANSFERS FROM OTHR FND	3800								
T/F TAX COLLECTORS-GPT	3800 27	4,863			4,863			58,360	58,360
T/F '04 TIF CONSTR-HOM	3800 89								
	---	---	---	---	---	---	---	---	---
TRANSFERS FROM OTHR		**4,863**			**4,863**			**58,360**	**58,360**
	---	---	---	---	---	---	---	---	---
TRANSFERS		**4,863**			**4,863**			**58,360**	**58,360**
NON-REVENUE RECEIPTS	390A								
REFUND & RECOVERY	3965								
	---	---	---	---	---	---	---	---	---
NON-REVENUE RECEIPTS									
BEGINNING CASH BALANCE	399A								
APPROPRIABLE FUND BALAN	3999	10,750			10,750			129,000	129,000
	---	---	---	---	---	---	---	---	---
BEGINNING CASH BALANC		**10,750**			**10,750**			**129,000**	**129,000**
	---	---	---	---	---	---	---	---	---
REVENUES		**17,803**	**26,194**	**147%**	**17,803**	**26,194**	**147%**	**213,644**	**187,450**

		CITY OF HATTIESBURG							. 25
022022 - 2003 TIF B&I-C/S REVENUES		REVENUE REPORT							11/1/12
		1 MONTHS ENDING 10/31/12							
		.....CURRENT.....			.....YEAR-TO-DATE.....			ANNUAL	UNREALIZED
	OBJ/SUB	ESTIMATED	ACTUAL	%REV	ESTIMATED	ACTUAL	%REV	ESTIMATE	BALANCE
REVENUES	200								
MISCELLANEOUS	340A								
INTEREST EARNINGS	3400								
CERTIFICATES OF DEPOSI	3402								
SAVINGS ACCOUNT/MMA	3405		12			12			(12)
OTHER INTEREST	3407								
TREASURY NOTES	3409								
	---	---	---	---	---	---	---	---	---
INTEREST EARNINGS			**12**			**12**			**(12)**
	---	---	---	---	---	---	---	---	---
MISCELLANEOUS			**12**			**12**			**(12)**
TRANSFERS	380A								
TRANSFERS FROM OTHR FND	3800								
T/F GENERAL FUND	3800 01								
T/F TAX COLLECTORS-GPT	3800 27	20,113			20,113			241,356	241,356
T/F 2003 TIF CONST-CHA	3800 90								
	---	---	---	---	---	---	---	---	---
TRANSFERS FROM OTHR		**20,113**			**20,113**			**241,356**	**241,356**
	---	---	---	---	---	---	---	---	---
TRANSFERS		**20,113**			**20,113**			**241,356**	**241,356**
NON-REVENUE RECEIPTS	390A								
REFUND & RECOVERY	3965								
	---	---	---	---	---	---	---	---	---
NON-REVENUE RECEIPTS									
BEGINNING CASH BALANCE	399A								
APPROPRIABLE FUND BALAN	3999	11,666			11,666			140,000	140,000
	---	---	---	---	---	---	---	---	---
BEGINNING CASH BALANC		**11,666**			**11,666**			**140,000**	**140,000**
	---	---	---	---	---	---	---	---	---
REVENUES		**31,779**	**12**		**31,779**	**12**		**381,356**	**381,344**

		CITY OF HATTIESBURG							. 26
023023 - 2007 TIF B&I-T/C REVENUES		REVENUE REPORT							11/1/12
		1 MONTHS ENDING 10/31/12							
		.....CURRENT.....			.....YEAR-TO-DATE.....			ANNUAL	UNREALIZED
	OBJ/SUB	ESTIMATED	ACTUAL	%REV	ESTIMATED	ACTUAL	%REV	ESTIMATE	BALANCE
REVENUES	200								
INTER-GOVERNMNTL REVENUE	230A								
CITY/COUNTY-SHARED REVEN	270B								
LAMAR CTY	2708	9,057			9,057			108,694	108,694
	---	---	---	---	---	---	---	---	---
CITY/COUNTY-SHARED RE		**9,057**			**9,057**			**108,694**	**108,694**
MISCELLANEOUS	340A								
INTEREST EARNINGS	3400								
CERTIFICATES OF DEPOSI	3402								
SAVINGS ACCOUNT/MMA	3405	25	18	72%	25	18	72%	300	282
OTHER INTEREST	3407								
TREASURY NOTES	3409								
	---	---	---	---	---	---	---	---	---
INTEREST EARNINGS		**25**	**18**	**72%**	**25**	**18**	**72%**	**300**	**282**
	---	---	---	---	---	---	---	---	---
MISCELLANEOUS		**25**	**18**	**72%**	**25**	**18**	**72%**	**300**	**282**
TRANSFERS	380A								
TRANSFERS FROM OTHR FND	3800								
T/F TAX COLLECTORS-GPT	3800 27	29,376			29,376			352,517	352,517
T/F 2007 TIF CONST-TUR	3800 91								
	---	---	---	---	---	---	---	---	---
TRANSFERS FROM OTHR		**29,376**			**29,376**			**352,517**	**352,517**
	---	---	---	---	---	---	---	---	---
TRANSFERS		**29,376**			**29,376**			**352,517**	**352,517**
NON-REVENUE RECEIPTS	390A								
REFUND & RECOVERY	3965								
	---	---	---	---	---	---	---	---	---
NON-REVENUE RECEIPTS									
BEGINNING CASH BALANCE	399A								
APPROPRIABLE FUND BALAN	3999	18,333			18,333			220,000	220,000
	---	---	---	---	---	---	---	---	---
BEGINNING CASH BALANC		**18,333**			**18,333**			**220,000**	**220,000**
	---	---	---	---	---	---	---	---	---
REVENUES		**56,792**	**18**		**56,792**	**18**		**681,511**	**681,493**

		CITY OF HATTIESBURG							. 27
024024 - 2008 TIF B&I-L/C REVENUES		REVENUE REPORT							11/1/12
		1 MONTHS ENDING 10/31/12							
		.....CURRENT.....			.....YEAR-TO-DATE.....			ANNUAL	UNREALIZED
	OBJ/SUB	ESTIMATED	ACTUAL	%REV	ESTIMATED	ACTUAL	%REV	ESTIMATE	BALANCE
REVENUES	200								
INTER-GOVERNMNTL REVENUE	230A								
CITY/COUNTY-SHARED REVEN	270B								
LAMAR CTY	2708								
	---	---	---	---	---	---	---	---	---
CITY/COUNTY-SHARED RE									
MISCELLANEOUS	340A								
INTEREST EARNINGS	3400								
CERTIFICATES OF DEPOSI	3402								
SAVINGS ACCOUNT/MMA	3405		10			10			(10)
OTHER INTEREST	3407								
TREASURY NOTES	3409								
	---	---	---	---	---	---	---	---	---
INTEREST EARNINGS			**10**			**10**			**(10)**
	---	---	---	---	---	---	---	---	---
MISCELLANEOUS			**10**			**10**			**(10)**
TRANSFERS	380A								
TRANSFERS FROM OTHR FND	3800								
T/F TAX COLLECTORS-GPT	3800 27	6,409			6,409			76,913	76,913
T/F 2008 TIF CONST-L/C	3800 90								
	---	---	---	---	---	---	---	---	---
TRANSFERS FROM OTHR		**6,409**			**6,409**			**76,913**	**76,913**
	---	---	---	---	---	---	---	---	---
TRANSFERS		**6,409**			**6,409**			**76,913**	**76,913**
NON-REVENUE RECEIPTS	390A								
REFUND & RECOVERY	3965								
	---	---	---	---	---	---	---	---	---
NON-REVENUE RECEIPTS									
BEGINNING CASH BALANCE	399A								
APPROPRIABLE FUND BALAN	3999	9,750			9,750			117,000	117,000
	---	---	---	---	---	---	---	---	---
BEGINNING CASH BALANC		**9,750**			**9,750**			**117,000**	**117,000**
	---	---	---	---	---	---	---	---	---
REVENUES		**16,159**	**10**		**16,159**	**10**		**193,913**	**193,903**

		CITY OF HATTIESBURG							. 28
025025 - 2011 TIF B&I-KOHLS REVENUES		REVENUE REPORT							11/1/12
		1 MONTHS ENDING 10/31/12							
		.....CURRENT.....			.....YEAR-TO-DATE.....			ANNUAL	UNREALIZED
	OBJ/SUB	ESTIMATED	ACTUAL	%REV	ESTIMATED	ACTUAL	%REV	ESTIMATE	BALANCE
REVENUES	200								
INTER-GOVERNMNTL REVENUE	230A								
CITY/COUNTY-SHARED REVEN	270B								
LAMAR CTY	2708								
	---	---	---	---	---	---	---	---	---
CITY/COUNTY-SHARED RE									
MISCELLANEOUS	340A								
INTEREST EARNINGS	3400								
CERTIFICATES OF DEPOSI	3402								
SAVINGS ACCOUNT/MMA	3405		1			1			(1)
OTHER INTEREST	3407								
TREASURY NOTES	3409								
	---	---	---	---	---	---	---	---	---
INTEREST EARNINGS			**1**			**1**			**(1)**
	---	---	---	---	---	---	---	---	---
MISCELLANEOUS			**1**			**1**			**(1)**
TRANSFERS	380A								
TRANSFERS FROM OTHR FND	3800								
T/F TAX COLLECTORS-GPT	3800 27	6,194			6,194			74,339	74,339
T/F 2011 TIF CONST-KOH	3800 91								
	---	---	---	---	---	---	---	---	---
TRANSFERS FROM OTHR		**6,194**			**6,194**			**74,339**	**74,339**
	---	---	---	---	---	---	---	---	---
TRANSFERS		**6,194**			**6,194**			**74,339**	**74,339**
NON-REVENUE RECEIPTS	390A								
REFUND & RECOVERY	3965								
APPROPRIABLE FUND BALAN	3999								
	---	---	---	---	---	---	---	---	---
NON-REVENUE RECEIPTS									
	---	---	---	---	---	---	---	---	---
REVENUES		**6,194**	**1**		**6,194**	**1**		**74,339**	**74,338**

		CITY OF HATTIESBURG							. 29
027027 - TAX COLLECTOR'S REVENUES		REVENUE REPORT							11/1/12
		1 MONTHS ENDING 10/31/12							
		.....CURRENT.....			.....YEAR-TO-DATE.....			ANNUAL	UNREALIZED
	OBJ/SUB	ESTIMATED	ACTUAL	%REV	ESTIMATED	ACTUAL	%REV	ESTIMATE	BALANCE
REVENUES	200								
GENERAL PROPERTY TAXES	200A								
CURRENT YEAR TAXES	2000								
REALTY	2001								
REALTY-CITY	2001 CITY								
REALTY-O/S SCHOOL DIS	2001 OSD								
REALTY-SCHOOL	2001 SCHL								
REALTY-W/I SCHOOL DIS	2001 WSD								
	----------	----------	---------	----	----------	---------	----	----------	----------
REALTY									
HOMESTEAD LOSS	2005								
EXEMPT-TAX LOSS REIMB.	2006								
PERSONALTY-AUTO/RAILRO	2010								
PRSNLTY AUTO-CITY	2010 CITY								
PRSNLTY AUTO-O/S SCHO	2010 OSD								
PRSNLTY RR-O/S SCHOOL	2010 OSDRR								
PRSNLTY AUTO-SCHOOL	2010 SCHL								
PRSNLTY AUTO-W/I SCHO	2010 WSD								
	----------	----------	---------	----	----------	---------	----	----------	----------
PERSONALTY-AUTO/RAI									
PERSONALTY	2020								
PERSONALTY-CITY	2020 CITY								
PERSONALTY-O/S SCHOOL	2020 OSD								
PERSONALTY-SCHOOL	2020 SCHL								
PERSONALTY-W/I SCHOOL	2020 WSD								
	----------	----------	---------	----	----------	---------	----	----------	----------
PERSONALTY									
RENTAL VEHICLES	2026								
RENTAL VEHICLES-GENER	2026 GEN								
	----------	----------	---------	----	----------	---------	----	----------	----------
RENTAL VEHICLES									
	----------	----------	---------	----	----------	---------	----	----------	----------
CURRENT YEAR TAXES									
PRIOR YEAR TAXES	2030								
NON-EXEMPT REALTY P/Y	2031		15,319			15,319			(15,319)
EXEMPT REALTY P/Y	2035		23,520			23,520			(23,520)
PERSONALTY-AUTO P/Y	2040		223,862			223,862			(223,862)

		CITY OF HATTIESBURG							. 29
027027 - TAX COLLECTOR'S REVENUES		REVENUE REPORT							11/1/12
		1 MONTHS ENDING 10/31/12							
		.....CURRENT.....			.....YEAR-TO-DATE.....			ANNUAL	UNREALIZED
	OBJ/SUB	ESTIMATED	ACTUAL	%REV	ESTIMATED	ACTUAL	%REV	ESTIMATE	BALANCE
PERSONALTY-RAIL CAR P/	2045								
PERSONALTY P/Y	2050		714			714			(714)
	---	---	---	---	---	---	---	---	---
PRIOR YEAR TAXES			**263,416**			**263,416**			**(263,416)**
	---	---	---	---	---	---	---	---	---
GENERAL PROPERTY TAXE			**263,416**			**263,416**			**(263,416)**
TAXES-OTHER	206A								
INT/PENALTY ON DEL. TAX	2100		31,087			31,087			(31,087)
EXCESS BID-PROP. TAXES	2110								
	---	---	---	---	---	---	---	---	---
TAXES-OTHER			**31,087**			**31,087**			**(31,087)**
LICENSES, PERMITS & FEES	220A								
OTHER PERMITS & FEES	2230								
CITY CLERK FEES	2232								
	---	---	---	---	---	---	---	---	---
OTHER PERMITS & FEES									
	---	---	---	---	---	---	---	---	---
LICENSES, PERMITS & F									
MISCELLANEOUS	340A								
INTEREST EARNINGS	3400								
CERTIFICATES OF DEPOSI	3402								
SAVINGS ACCOUNT/MMA	3405		160			160			(160)
TREASURY NOTES	3409								
	---	---	---	---	---	---	---	---	---
INTEREST EARNINGS			**160**			**160**			**(160)**
	---	---	---	---	---	---	---	---	---
MISCELLANEOUS			**160**			**160**			**(160)**
NON-REVENUE RECEIPTS	390A								
REFUND & RECOVERY	3965								
	---	---	---	---	---	---	---	---	---
NON-REVENUE RECEIPTS									
	---	---	---	---	---	---	---	---	---
REVENUES			**294,663**			**294,663**			**(294,663)**

		CITY OF HATTIESBURG						.	31
039039 - AIRPORT IMPR. REVENUES		REVENUE REPORT							11/1/12
		1 MONTHS ENDING 10/31/12							
		.....CURRENT.....			.....YEAR-TO-DATE.....			ANNUAL	UNREALIZED
	OBJ/SUB	ESTIMATED	ACTUAL	%REV	ESTIMATED	ACTUAL	%REV	ESTIMATE	BALANCE
REVENUES	200								
OTHER PERMITS & FEES	2230								
FLOWAGE FEE	2295								
	---	---	---	---	---	---	---	---	---
OTHER PERMITS & FEES									
INTER-GOVERNMNTL REVENUE	230A								
FEDERAL GRANTS	230B								
FEDERAL AVIATION ADM.	2330	111,897			111,897			1,342,768	1,342,768
	---	---	---	---	---	---	---	---	---
FEDERAL GRANTS		**111,897**			**111,897**			**1,342,768**	**1,342,768**
STATE GRANTS	250B								
MDOT-MULTIMODAL GRANT	2509								
AIRPORT GRANT	2540								
	---	---	---	---	---	---	---	---	---
STATE GRANTS									
STATE-SHARED REVENUE	260B								
AIRPLANE REGISTRATION T	2655								
	---	---	---	---	---	---	---	---	---
STATE-SHARED REVENUE									
CITY/COUNTY-SHARED REVEN	270B								
AIRPORT ASSIST-FORREST	2725								
	---	---	---	---	---	---	---	---	---
CITY/COUNTY-SHARED RE									
MISCELLANEOUS	340A								
INTEREST EARNINGS	3400								
CERTIFICATES OF DEPOSI	3402								
SAVINGS ACCOUNT/MMA	3405								
	---	---	---	---	---	---	---	---	---
INTEREST EARNINGS									
RENTS AND ROYALTIES	3410								
BUILDING	3412								
YORK INT/JOHNSON CONT	3412 12	291			291			3,500	3,500
LORESCO INC	3412 13	100	100	100%	100	100	100%	1,200	1,100
COCA COLA (1906 COMPA	3412 14								
H'BURG HANGER ASSN.	3412 18	55			55			660	660
SOUTHEAST AVIATION SE	3412 21	1,750	1,870	106%	1,750	1,870	106%	21,000	19,130
OTHER BLDG. RENT	3412 99								

		CITY OF HATTIESBURG							. 31
039039 - AIRPORT IMPR. REVENUES		REVENUE REPORT							11/1/12
		1 MONTHS ENDING 10/31/12							
		.....CURRENT.....			.....YEAR-TO-DATE.....			ANNUAL	UNREALIZED
	OBJ/SUB	ESTIMATED	ACTUAL	%REV	ESTIMATED	ACTUAL	%REV	ESTIMATE	BALANCE
	---	---	---	---	---	---	---	---	---
BUILDING		**2,196**	**1,970**	**89%**	**2,196**	**1,970**	**89%**	**26,360**	**24,390**
MINERAL LEASE-AIRPORT	3418								
	---	---	---	---	---	---	---	---	---
RENTS AND ROYALTIES		**2,196**	**1,970**	**89%**	**2,196**	**1,970**	**89%**	**26,360**	**24,390**
	---	---	---	---	---	---	---	---	---
MISCELLANEOUS		**2,196**	**1,970**	**89%**	**2,196**	**1,970**	**89%**	**26,360**	**24,390**
TRANSFERS	380A								
TRANSFERS FROM OTHR FND	3800								
T/F GENERAL FUND	3800 01								
	---	---	---	---	---	---	---	---	---
TRANSFERS FROM OTHR									
	---	---	---	---	---	---	---	---	---
TRANSFERS									
NON-REVENUE RECEIPTS	390A								
SALE OF REAL ESTATE	3920								
	---	---	---	---	---	---	---	---	---
NON-REVENUE RECEIPTS									
BEGINNING CASH BALANCE	399A								
APPROPRIABLE FUND BALAN	3999	3,750			3,750			45,000	45,000
	---	---	---	---	---	---	---	---	---
BEGINNING CASH BALANC		**3,750**			**3,750**			**45,000**	**45,000**
	---	---	---	---	---	---	---	---	---
REVENUES		**117,844**	**1,970**	**1%**	**117,844**	**1,970**	**1%**	**1,414,128**	**1,412,158**

		CITY OF HATTIESBURG							. 33
050050 - 2009 RFDG BONDS REVENUES		REVENUE REPORT							11/1/12
		1 MONTHS ENDING 10/31/12							
		.....CURRENT.....			.....YEAR-TO-DATE.....			ANNUAL	UNREALIZED
	OBJ/SUB	ESTIMATED	ACTUAL	%REV	ESTIMATED	ACTUAL	%REV	ESTIMATE	BALANCE
REVENUES	200								
NON-REVENUE RECEIPTS	390A								
SALE OF BONDS	3910								
BOND PROCEEDS	3912								
BOND PREMIUM	3913								
ACCRUED INTEREST	3915								
	---	---	---	---	---	---	---	---	---
SALE OF BONDS									
	---	---	---	---	---	---	---	---	---
NON-REVENUE RECEIPTS									
BEGINNING CASH BALANCE	399A								
APPROPRIABLE FUND BALAN	3999								
	---	---	---	---	---	---	---	---	---
BEGINNING CASH BALANC									
	---	---	---	---	---	---	---	---	---
REVENUES									

		CITY OF HATTIESBURG							. 34
072072 - MUN.ROAD&BRIDGE REVENUES		REVENUE REPORT							11/1/12
		1 MONTHS ENDING 10/31/12							
		.....CURRENT.....			.....YEAR-TO-DATE.....			ANNUAL	UNREALIZED
	OBJ/SUB	ESTIMATED	ACTUAL	%REV	ESTIMATED	ACTUAL	%REV	ESTIMATE	BALANCE
REVENUES	200								
INTER-GOVERNMNTL REVENUE	230A								
FEDERAL GRANTS	230B								
FHWA-STORM RELATED	2323								
FEMA RELIEF	2337								
	---	---	---	---	---	---	---	---	---
FEDERAL GRANTS									
STATE GRANTS	250B								
STATE BOND FDS TRACE/ZO	2501								
WEATHERSBY ROAD	2533								
MDOT-MPO GRANT	2555								
MDOT-MPO GRANT	2555 01								
MDOT-TRAFFIC SIGNALS	2555 02	11,035			11,035			132,425	132,425
MDOT-NEW TARGET	2555 03								
MDOT-#1 HARDY ST WIDEN	2555 04								
MDOT-BIKE/TROLLEY TRAI	2555 05	51,000			51,000			612,000	612,000
MDOT-#2 HARDY ST WIDEN	2555 06	53,333			53,333			640,000	640,000
MDOT-TRAF SIGNAL-SO.PO	2555 07								
MDOT-ARRA-PINE B'WAY T	2555 08								
MDOT-SIDEWALKS-SCHOOLS	2555 09	18,320			18,320			219,840	219,840
MDOT-WESTERN BELTWAY	2555 10	39,583			39,583			475,000	475,000
MDOT-RAILROAD CROSSING	2555 11								
MDOT-LL TRACE-HUTCH.TO	2555 12	46,666			46,666			560,000	560,000
MDOT-B'WAY,MOBILE TE	2555 13								
MDOT-34TH AVE TE	2555 14								
MDOT-4TH ST PHASE I	2555 15								
MDOT-4TH ST PHASE II	2555 16								
	---	---	---	---	---	---	---	---	---
MDOT-MPO GRANT		**219,938**			**219,938**			**2,639,265**	**2,639,265**
	---	---	---	---	---	---	---	---	---
STATE GRANTS		**219,938**			**219,938**			**2,639,265**	**2,639,265**
CITY/COUNTY-SHARED REVEN	270B								
PRO-RATA CTY RD TAX-FOR	2710	106,833	10,766	10%	106,833	10,766	10%	1,282,000	1,271,234
PRO-RATA CTY RD TAX-LAM	2715	59,166	2,702	4%	59,166	2,702	4%	710,000	707,298
MISCELLANEOUS GRANTS	2740								
	---	---	---	---	---	---	---	---	---
CITY/COUNTY-SHARED RE		**166,000**	**13,468**	**8%**	**166,000**	**13,468**	**8%**	**1,992,000**	**1,978,532**

		CITY OF HATTIESBURG							. 34
072072 - MUN.ROAD&BRIDGE REVENUES		REVENUE REPORT							11/1/12
		1 MONTHS ENDING 10/31/12							
		.....CURRENT.....			.....YEAR-TO-DATE.....			ANNUAL	UNREALIZED
	OBJ/SUB	ESTIMATED	ACTUAL	%REV	ESTIMATED	ACTUAL	%REV	ESTIMATE	BALANCE
MISCELLANEOUS	340A								
INTEREST EARNINGS	3400								
CERTIFICATES OF DEPOSI	3402								
SAVINGS ACCOUNT/MMA	3405	58	3	5%	58	3	5%	700	697
	---	---	---	---	---	---	---	---	---
INTEREST EARNINGS		**58**	**3**	**5%**	**58**	**3**	**5%**	**700**	**697**
CONTRIBUTIONS-PUBLIC	3450								
CONTRIBUTIONS-FORREST	3455	6,250			6,250			75,000	75,000
CONTRIB-RAILS TO TRAIL	3457	28,333			28,333			340,000	340,000
	---	---	---	---	---	---	---	---	---
CONTRIBUTIONS-PUBLIC		**34,583**			**34,583**			**415,000**	**415,000**
CONTRIBUTIONS-PRIVATE	3460								
CONTRIB-RAILROAD PROJE	3461								
CONTRIB-CHAUVET SQ.PRO	3469								
	---	---	---	---	---	---	---	---	---
CONTRIBUTIONS-PRIVAT									
	---	---	---	---	---	---	---	---	---
MISCELLANEOUS		**34,641**	**3**		**34,641**	**3**		**415,700**	**415,697**
TRANSFERS	380A								
TRANSFERS FROM OTHR FND	3800								
T/F W & S CONSTRUCTION	3800 75								
T/F INDUSTRIAL PARK DE	3800 87								
	---	---	---	---	---	---	---	---	---
TRANSFERS FROM OTHR									
	---	---	---	---	---	---	---	---	---
TRANSFERS									
NON-REVENUE RECEIPTS	390A								
SALE OF TIMBER	3923								
REFUND & RECOVERY	3965								
REFUND-COST SHARING	3969								
CAPITAL LEASE PROCEEDS	3970								
	---	---	---	---	---	---	---	---	---
NON-REVENUE RECEIPTS									
BEGINNING CASH BALANCE	399A								
APPROPRIABLE FUND BALAN	3999	41,666			41,666			500,000	500,000
	---	---	---	---	---	---	---	---	---

		CITY OF HATTIESBURG							. 34
072072 - MUN.ROAD&BRIDGE REVENUES		REVENUE REPORT							11/1/12
		1 MONTHS ENDING 10/31/12							
		.....CURRENT.....			.....YEAR-TO-DATE.....			ANNUAL	UNREALIZED
	OBJ/SUB	ESTIMATED	ACTUAL	%REV	ESTIMATED	ACTUAL	%REV	ESTIMATE	BALANCE
BEGINNING CASH BALANC		**41,666**			**41,666**			**500,000**	**500,000**
	---	---	---	---	---	---	---	---	---
REVENUES		**462,247**	**13,470**	**2%**	**462,247**	**13,470**	**2%**	**5,546,965**	**5,533,495**

		CITY OF HATTIESBURG							. 36
073073 - MASS TRANSIT REVENUES		REVENUE REPORT							11/1/12
		1 MONTHS ENDING 10/31/12							
		.....CURRENT.....			.....YEAR-TO-DATE.....			ANNUAL	UNREALIZED
	OBJ/SUB	ESTIMATED	ACTUAL	%REV	ESTIMATED	ACTUAL	%REV	ESTIMATE	BALANCE
REVENUES	200								
INTER-GOVERNMNTL REVENUE	230A								
FEDERAL GRANTS	230B								
UMTA-MASS TRANS-OPER.C/	2340	36,056	20,234	56%	36,056	20,234	56%	432,673	412,439
UMTA-MASS TRANS-CAPTL.	2341	4,245			4,245			50,942	50,942
UMTA-MASS TRANS-PLANNIN	2342								
UMTA-MASS TRANS-P/Y	2343								
UMTA-MASS TRANS-PREV.C/	2344		12,136			12,136			(12,136)
ARRA-MASS TRANS	2345	32,564	202		32,564	202		390,772	390,570
	---	---	---	---	---	---	---	---	---
FEDERAL GRANTS		**72,865**	**32,572**	**44%**	**72,865**	**32,572**	**44%**	**874,387**	**841,815**
STATE GRANTS	250B								
MDOT GRANT(PLANNING/CAP	2555								
	---	---	---	---	---	---	---	---	---
STATE GRANTS									
MISCELLANEOUS	340A								
INTEREST EARNINGS	3400								
CERTIFICATES OF DEPOSI	3402								
SAVINGS ACCOUNT/MMA	3405		10			10			(10)
	---	---	---	---	---	---	---	---	---
INTEREST EARNINGS			**10**			**10**			**(10)**
MASS TRANSIT CHARGES	3520								
BUS FARES-FIXED ROUTES	3525	2,916	3,324	113%	2,916	3,324	113%	35,000	31,676
BUS FARES-DEMAND RES-D	3527								
ADVERTISING	3535	283	278	98%	283	278	98%	3,400	3,122
MISC. CHARGES & FEES	3540								
	---	---	---	---	---	---	---	---	---
MASS TRANSIT CHARGES		**3,200**	**3,602**	**112%**	**3,200**	**3,602**	**112%**	**38,400**	**34,798**
	---	---	---	---	---	---	---	---	---
MISCELLANEOUS		**3,200**	**3,612**	**112%**	**3,200**	**3,612**	**112%**	**38,400**	**34,788**
TRANSFERS	380A								
TRANSFERS FROM OTHR FND	3800								
T/F GENERAL FUND	3800 01	27,916			27,916			335,000	335,000
T/F TAX COLLECTORS-GPT	3800 27	16,666	1,414	8%	16,666	1,414	8%	200,000	198,586
	---	---	---	---	---	---	---	---	---
TRANSFERS FROM OTHR		**44,583**	**1,414**	**3%**	**44,583**	**1,414**	**3%**	**535,000**	**533,586**
	---	---	---	---	---	---	---	---	---

		CITY OF HATTIESBURG							. 36
073073 - MASS TRANSIT REVENUES		REVENUE REPORT							11/1/12
		1 MONTHS ENDING 10/31/12							
		.....CURRENT.....			.....YEAR-TO-DATE.....			ANNUAL	UNREALIZED
	OBJ/SUB	ESTIMATED	ACTUAL	%REV	ESTIMATED	ACTUAL	%REV	ESTIMATE	BALANCE
TRANSFERS		**44,583**	**1,414**	**3%**	**44,583**	**1,414**	**3%**	**535,000**	**533,586**
NON-REVENUE RECEIPTS	390A								
SALE OF EQUIPMENT	3940								
SALE OF SCRAP MATERIAL	3943								
VENDING COMM./REFUNDS	3964								
REFUND & RECOVERY	3965								
RECOVERY OF DAMAGE CLAI	3967								
	---	---	---	---	---	---	---	---	---
NON-REVENUE RECEIPTS									
BEGINNING CASH BALANCE	399A								
APPROPRIABLE FUND BALAN	3999	1,250			1,250			15,000	15,000
	---	---	---	---	---	---	---	---	---
BEGINNING CASH BALANC		**1,250**			**1,250**			**15,000**	**15,000**
	---	---	---	---	---	---	---	---	---
REVENUES		**121,898**	**37,598**	**30%**	**121,898**	**37,598**	**30%**	**1,462,787**	**1,425,189**

		CITY OF HATTIESBURG							. 37
075075 - W&S CONSTR.REVENUES		REVENUE REPORT							11/1/12
		1 MONTHS ENDING 10/31/12							
		.....CURRENT.....			.....YEAR-TO-DATE.....			ANNUAL	UNREALIZED
	OBJ/SUB	ESTIMATED	ACTUAL	%REV	ESTIMATED	ACTUAL	%REV	ESTIMATE	BALANCE
REVENUES	200								
INTER-GOVERNMNTL REVENUE	230A								
FEDERAL GRANTS	230B								
CDBG-USA YEAST	2336	416,666	17,799	4%	416,666	17,799	4%	5,000,000	4,982,201
FEMA RELIEF	2337								
CDBG-WIS PAK	2338	22,541			22,541			270,500	270,500
CDBG-WATER PLANT 2 RENO	2339	8,538	35,425	414%	8,538	35,425	414%	102,459	67,034
US CORPS OF ENGR PROJEC	2354								
LAGOON AERATORS-DOE ARR	2357								
COUNTRY CLUB WATER-EPA	2358								
NRCS EROSION CONTROL GR	2512								
I.P.-HYBERPLASTIC-MDA G	2514								
	----------	----------	---------	----	----------	---------	----	----------	----------
FEDERAL GRANTS		**447,746**	**53,224**	**11%**	**447,746**	**53,224**	**11%**	**5,372,959**	**5,319,735**
CITY/COUNTY-SHARED REVEN	270B								
FORREST CTY	2705								
PETAL	2737								
LAMAR PARK	2738								
	----------	----------	---------	----	----------	---------	----	----------	----------
CITY/COUNTY-SHARED RE									
MISCELLANEOUS	340A								
INTEREST EARNINGS	3400								
CERTIFICATES OF DEPOSI	3402								
SAVINGS ACCOUNT/MMA	3405	83	203	244%	83	203	244%	1,000	797
	----------	----------	---------	----	----------	---------	----	----------	----------
INTEREST EARNINGS		**83**	**203**	**244%**	**83**	**203**	**244%**	**1,000**	**797**
RENTS AND ROYALTIES	3410								
LAND	3411								
TRITELL COMMUNICATION	3411 12								
AT&T/CINGULAR(WTR WOR	3411 13	2,083	1,159	55%	2,083	1,159	55%	25,000	23,841
SBA STRUCTURES (WM CA	3411 14	1,166	2,460	210%	1,166	2,460	210%	14,000	11,540
	----------	----------	---------	----	----------	---------	----	----------	----------
LAND		**3,250**	**3,619**	**111%**	**3,250**	**3,619**	**111%**	**39,000**	**35,381**
BUILDING	3412								
USM CELLULAR ONE RENT	3412 41								
TH INC MANAGEMENT(USM	3412 42								
VERIZON-USM WATER TAN	3412 43	1,075	1,156	107%	1,075	1,156	107%	12,900	11,744

		CITY OF HATTIESBURG							. 37
075075 - W&S CONSTR.REVENUES		REVENUE REPORT							11/1/12
		1 MONTHS ENDING 10/31/12							
		.....CURRENT.....			.....YEAR-TO-DATE.....			ANNUAL	UNREALIZED
	OBJ/SUB	ESTIMATED	ACTUAL	%REV	ESTIMATED	ACTUAL	%REV	ESTIMATE	BALANCE
CELLULAR SOUTH(MULTI	3412 44	1,380	1,380	100%	1,380	1,380	100%	16,560	15,180
	---	---	---	---	---	---	---	---	---
BUILDING		**2,455**	**2,536**	**103%**	**2,455**	**2,536**	**103%**	**29,460**	**26,924**
	---	---	---	---	---	---	---	---	---
RENTS AND ROYALTIES		**5,705**	**6,155**	**107%**	**5,705**	**6,155**	**107%**	**68,460**	**62,305**
CONTRIBUTIONS-PRIVATE	3460								
CONTRIB-USA YEAST SWR	3461								
	---	---	---	---	---	---	---	---	---
CONTRIBUTIONS-PRIVAT									
	---	---	---	---	---	---	---	---	---
MISCELLANEOUS		**5,788**	**6,358**	**109%**	**5,788**	**6,358**	**109%**	**69,460**	**63,102**
TRANSFERS	380A								
TRANSFERS FROM OTHR FND	3800								
T/F GENERAL FUND	3800 01								
T/F WATER & SEWER O &	3800 09								
T/F WATER & SEWER B&I	3800 10								
T/F WATER & SEWER	3800 11	150,000	484,611	323%	150,000	484,611	323%	1,800,000	1,315,389
T/F W & S CONTINGENCY	3800 17								
T/F COM.DEV.BLK.GRANT	3800 82								
T/F INDUSTRIAL PARK DE	3800 87								
	---	---	---	---	---	---	---	---	---
TRANSFERS FROM OTHR		**150,000**	**484,611**	**323%**	**150,000**	**484,611**	**323%**	**1,800,000**	**1,315,389**
	---	---	---	---	---	---	---	---	---
TRANSFERS		**150,000**	**484,611**	**323%**	**150,000**	**484,611**	**323%**	**1,800,000**	**1,315,389**
NON-REVENUE RECEIPTS	390A								
REFUND & RECOVERY	3965								
CAPITAL LEASE PROCEEDS	3970								
NOTE PROCEEDS	3975								
SRF LOAN PROCEEDS-#1	3980								
SRF LOAN PROCEEDS-#2	3985								
SRF LOAN PROCEEDS-#3	3987								
	---	---	---	---	---	---	---	---	---
NON-REVENUE RECEIPTS									
BEGINNING CASH BALANCE	399A								
APPROPRIABLE FUND BALAN	3999	332,366			332,366			3,988,400	3,988,400
	---	---	---	---	---	---	---	---	---

		CITY OF HATTIESBURG							. 37
075075 - W&S CONSTR.REVENUES		REVENUE REPORT							11/1/12
		1 MONTHS ENDING 10/31/12							
		.....CURRENT.....			.....YEAR-TO-DATE.....			ANNUAL	UNREALIZED
	OBJ/SUB	ESTIMATED	ACTUAL	%REV	ESTIMATED	ACTUAL	%REV	ESTIMATE	BALANCE
BEGINNING CASH BALANC		**332,366**			**332,366**			**3,988,400**	**3,988,400**
	---	---	---	---	---	---	---	---	---
REVENUES		**935,901**	**544,192**	**58%**	**935,901**	**544,192**	**58%**	**11,230,819**	**10,686,627**

		CITY OF HATTIESBURG							. 39
077077 - COMMUNITY CTR REVENUES		REVENUE REPORT							11/1/12
		1 MONTHS ENDING 10/31/12							
		.....CURRENT.....			.....YEAR-TO-DATE.....			ANNUAL	UNREALIZED
	OBJ/SUB	ESTIMATED	ACTUAL	%REV	ESTIMATED	ACTUAL	%REV	ESTIMATE	BALANCE
REVENUES	200								
CHARGES FOR SERVICES	280A								
CULTURE AND RECREATION	3100								
SAENGER RESTORA/MAINT	3125								
SAENGER CONCESSIONS	3132								
GIFT SHOP CONCESSIONS	3135								
TCKT MASTER/IN-HOUSE P	3136								
MCNAIR REC CTR USE FE	3140	41			41			500	500
SIGLER CENTER USE FEE	3141	125			125			1,500	1,500
C.E.ROY/5TH ST.C.C.USE	3142	666	438	65%	666	438	65%	8,000	7,563
JDS C.C. USE FEE	3143	1,083	545	50%	1,083	545	50%	13,000	12,455
SAENGER THEATER USE FE	3144								
CULTURAL CTR USE FEE	3146	583	575	98%	583	575	98%	7,000	6,425
N R BURGER/6TH ST CC U	3148								
	---	---	---	---	---	---	---	---	---
CULTURE AND RECREATI		**2,500**	**1,558**	**62%**	**2,500**	**1,558**	**62%**	**30,000**	**28,443**
	---	---	---	---	---	---	---	---	---
CHARGES FOR SERVICES		**2,500**	**1,558**	**62%**	**2,500**	**1,558**	**62%**	**30,000**	**28,443**
MISCELLANEOUS	340A								
INTEREST EARNINGS	3400								
CERTIFICATES OF DEPOSI	3402								
SAVINGS ACCOUNT/MMA	3405	16	25	156%	16	25	156%	200	175
	---	---	---	---	---	---	---	---	---
INTEREST EARNINGS		**16**	**25**	**156%**	**16**	**25**	**156%**	**200**	**175**
RENTS AND ROYALTIES	3410								
EQUIPMENT	3419								
	---	---	---	---	---	---	---	---	---
RENTS AND ROYALTIES									
CONTRIBUTIONS-PUBLIC	3450								
CONTRIBUTIONS-FORREST	3455								
	---	---	---	---	---	---	---	---	---
CONTRIBUTIONS-PUBLIC									
CONTRIBUTIONS-PRIVATE	3460								
	---	---	---	---	---	---	---	---	---
MISCELLANEOUS		**16**	**25**	**156%**	**16**	**25**	**156%**	**200**	**175**
TRANSFERS	380A								
TRANSFERS FROM OTHR FND	3800								

		CITY OF HATTIESBURG							. 39
077077 - COMMUNITY CTR REVENUES		REVENUE REPORT							11/1/12
		1 MONTHS ENDING 10/31/12							
		.....CURRENT.....			.....YEAR-TO-DATE.....			ANNUAL	UNREALIZED
	OBJ/SUB	ESTIMATED	ACTUAL	%REV	ESTIMATED	ACTUAL	%REV	ESTIMATE	BALANCE
T/F GENERAL FUND	3800 01	62,500			62,500			750,000	750,000
	---	---	---	---	---	---	---	---	---
TRANSFERS FROM OTHR		**62,500**			**62,500**			**750,000**	**750,000**
	---	---	---	---	---	---	---	---	---
TRANSFERS		**62,500**			**62,500**			**750,000**	**750,000**
NON-REVENUE RECEIPTS	390A								
COMMISSIONS-TCKTS/CONCE	3963								
REFUND & RECOVERY	3965								
RECOVERY OF DAMAGE CLAI	3967								
	---	---	---	---	---	---	---	---	---
NON-REVENUE RECEIPTS									
BEGINNING CASH BALANCE	399A								
APPROPRIABLE FUND BALAN	3999	20,833			20,833			250,000	250,000
	---	---	---	---	---	---	---	---	---
BEGINNING CASH BALANC		**20,833**			**20,833**			**250,000**	**250,000**
	---	---	---	---	---	---	---	---	---
REVENUES		**85,850**	**1,583**	**1%**	**85,850**	**1,583**	**1%**	**1,030,200**	**1,028,617**

		CITY OF HATTIESBURG							. 40
078078 - '09 WATER METER PROJ REVENUES		REVENUE REPORT							11/1/12
		1 MONTHS ENDING 10/31/12							
		.....CURRENT.....			.....YEAR-TO-DATE.....			ANNUAL	UNREALIZED
	OBJ/SUB	ESTIMATED	ACTUAL	%REV	ESTIMATED	ACTUAL	%REV	ESTIMATE	BALANCE
REVENUES	200								
MISCELLANEOUS	340A								
INTEREST EARNINGS	3400								
SAVINGS ACCOUNT/MMA	3405		6			6			(6)
	---	---	---	---	---	---	---	---	---
INTEREST EARNINGS			**6**			**6**			**(6)**
	---	---	---	---	---	---	---	---	---
MISCELLANEOUS			**6**			**6**			**(6)**
NON-REVENUE RECEIPTS	390A								
SALE OF BONDS	3910								
BOND PROCEEDS	3912								
ACCRUED INTEREST	3915								
	---	---	---	---	---	---	---	---	---
SALE OF BONDS									
NOTE PROCEEDS	3975								
	---	---	---	---	---	---	---	---	---
NON-REVENUE RECEIPTS									
BEGINNING CASH BALANCE	399A								
APPROPRIABLE FUND BALAN	3999	16,666			16,666			200,000	200,000
	---	---	---	---	---	---	---	---	---
BEGINNING CASH BALANC		**16,666**			**16,666**			**200,000**	**200,000**
	---	---	---	---	---	---	---	---	---
REVENUES		**16,666**	**6**		**16,666**	**6**		**200,000**	**199,994**

		CITY OF HATTIESBURG							. 41
082082 - CDBG REVENUES		REVENUE REPORT							11/1/12
		1 MONTHS ENDING 10/31/12							
		.....CURRENT.....			.....YEAR-TO-DATE.....			ANNUAL	UNREALIZED
	OBJ/SUB	ESTIMATED	ACTUAL	%REV	ESTIMATED	ACTUAL	%REV	ESTIMATE	BALANCE
REVENUES	200								
INTER-GOVERNMNTL REVENUE	230A								
FEDERAL GRANTS	230B								
CDBG-R ARRA (WOODLEY SD	2338	1,697			1,697			20,364	20,364
CDBG-ENT.-DRAINAGE	2365 DRG								
CDBG-ENT.-EMER.REHAB.	2365 ER								
CDBG-ENT.-FULL REHAB.	2365 FR								
	----------	----------	---------	----	----------	---------	----	----------	----------
CDBG-R ARRA (WOODLEY		**1,697**			**1,697**			**20,364**	**20,364**
HOME ENTITLEMENT-1995	2367								
HOME ENTIT-DOWNPAYMENT	2367 DA								
HOME ENTIT-FULL REHAB.	2367 FR								
	----------	----------	---------	----	----------	---------	----	----------	----------
HOME ENTITLEMENT-199									
CDBG-ENTITLEMENT-1996	2385								
CDBG-ENT.-ECONOMIC DEV	2385 EC								
CDBG-ENT.-EMER.REHAB.	2385 ER								
CDBG-ENT.-FACADE PROG	2385 FAC								
CDBG-ENT.-FULL REHAB.	2385 FR								
	----------	----------	---------	----	----------	---------	----	----------	----------
CDBG-ENTITLEMENT-199									
HOME ENTITLEMENT-1996	2387								
HOME ENTIT-CHDO	2387 CHDO								
HOME ENTIT-DOWNPAYMENT	2387 DA								
HOME ENTIT-FULL REHAB.	2387 FR								
	----------	----------	---------	----	----------	---------	----	----------	----------
HOME ENTITLEMENT-199									
HOME ENTITLEMENT-1997	2389								
HOME ENTIT-AFFORD.HOUS	2389 AH								
HOME ENTIT-CHDO	2389 CHDO								
HOME ENTIT-DOWNPAYMENT	2389 DA								
HOME ENTIT-FULL REHAB.	2389 FR								
	----------	----------	---------	----	----------	---------	----	----------	----------
HOME ENTITLEMENT-199									
CDBG-ENTITLEMENT-1997	2391								
CDBG-ENT.-DEMOLITION	2391 DEM								
CDBG-ENT.-EMER.REHAB.	2391 ER								

		CITY OF HATTIESBURG							. 41
082082 - CDBG REVENUES		REVENUE REPORT							11/1/12
		1 MONTHS ENDING 10/31/12							
		.....CURRENT.....			.....YEAR-TO-DATE.....			ANNUAL	UNREALIZED
	OBJ/SUB	ESTIMATED	ACTUAL	%REV	ESTIMATED	ACTUAL	%REV	ESTIMATE	BALANCE
CDBG-ENT.-FULL REHAB.	2391 FR								
CDBG-ENT.-NEIGHBORHD G	2391 NG								
	----------	----------	---------	----	----------	---------	----	----------	----------
CDBG-ENTITLEMENT-199									
HOME ENTITLEMENT-1998	2393								
HOME ENTIT-AFFORD.HOUS	2393 AH								
HOME ENTIT-CHDO	2393 CHDO								
HOME ENTIT-DOWNPAYMENT	2393 DA								
HOME ENTIT-FULL REHAB.	2393 FR								
	----------	----------	---------	----	----------	---------	----	----------	----------
HOME ENTITLEMENT-199									
CDBG-ENTITLEMENT-1998	2395								
CDBG-ENT.-ADMINISTRATI	2395 ADM								
CDBG-ENT.-DEMOLITION	2395 DEM								
CDBG-ENT.-DRAINAGE	2395 DRG								
CDBG-ENT.-EATON SCHOOL	2395 EAT								
CDBG-ENT.-EMER.REHAB.	2395 ER								
CDBG-ENT.-FULL REHAB.	2395 FR								
CDBG-ENT.-NEIGHBORHD G	2395 NG								
CDBG-ENT.-PLANNING	2395 PL								
CDBG-ENT.-PUBLIC SERVI	2395 PS								
	----------	----------	---------	----	----------	---------	----	----------	----------
CDBG-ENTITLEMENT-199									
HOME ENTITLEMENT-1999	2397								
HOME ENTIT-AFFORD.HOUS	2397 AH								
HOME ENTIT-CHDO ADMIN	2397 CHDOAD								
HOME ENTIT-CHDO SETASI	2397 CHDOSA								
HOME ENTIT-DOWNPAYMENT	2397 DA								
HOME ENTIT-DA RECAPTUR	2397 DAR								
HOME ENTIT-FULL REHAB.	2397 FR								
	----------	----------	---------	----	----------	---------	----	----------	----------
HOME ENTITLEMENT-199									
CDBG-ENTITLEMENT-1999	2399								
CDBG-ENT.-ADMINISTRATI	2399 ADM								
CDBG-ENT.-BRADY ST SEW	2399 BSS								
CDBG-ENT.-DEMOLITION	2399 DEM								

		CITY OF HATTIESBURG						.	41
082082 - CDBG REVENUES		REVENUE REPORT							11/1/12
		1 MONTHS ENDING 10/31/12							
		.....CURRENT.....			.....YEAR-TO-DATE.....			ANNUAL	UNREALIZED
	OBJ/SUB	ESTIMATED	ACTUAL	%REV	ESTIMATED	ACTUAL	%REV	ESTIMATE	BALANCE
CDBG-ENT.-DRAINAGE	2399 DRG								
CDBG-ENT.-EATON SCHOOL	2399 EAT								
CDBG-ENT.-EMER.REHAB.	2399 ER								
CDBG-ENT.-FULL REHAB.	2399 FR								
CDBG-ENT.-NEIGHBORHD G	2399 NG								
CDBG-ENT.-PLANNING	2399 PL								
CDBG-ENT.-PRVO	2399 PRVO								
CDBG-ENT.-PUBLIC SERVI	2399 PS								
CDBG-ENT.-SIDEWALKS	2399 SWLK								
	----------	----------	---------	----	----------	---------	----	----------	----------
CDBG-ENTITLEMENT-199									
CDBG-ENTITLEMENT-2000	2401								
CDBG-ENT.-ADMINISTRATI	2401 ADM								
CDBG-ENT.-DEMOLITION	2401 DEM								
CDBG-ENT.-DRAINAGE	2401 DRG								
CDBG-ENT.-EMER.REHAB.	2401 ER								
CDBG-ENT.-FACADE PROG	2401 FAC								
CDBG-ENT.-FULL REHAB.	2401 FR								
CDBG-ENT.-NEIGHBORHD G	2401 NG								
CDBG-ENT.-PUBLIC SERVI	2401 PS								
CDBG-ENT.-SIDEWALKS	2401 SWLK								
	----------	----------	---------	----	----------	---------	----	----------	----------
CDBG-ENTITLEMENT-200									
HOME ENTITLEMENT-2000	2402								
HOME ENTIT-AFFORD.HOUS	2402 AH								
HOME ENTIT-CHDO ADMIN	2402 CHDOAD								
HOME ENTIT-CHDO SETASI	2402 CHDOSA								
HOME ENTIT-DOWNPAYMENT	2402 DA								
HOME ENTIT-FULL REHAB.	2402 FR								
	----------	----------	---------	----	----------	---------	----	----------	----------
HOME ENTITLEMENT-200									
CDBG-ENTITLEMENT-2001	2403								
CDBG-ENT.-ADMINISTRATI	2403 ADM								
CDBG-ENT.-DEMOLITION	2403 DEM								
CDBG-ENT.-DRAINAGE	2403 DRG								
CDBG-ENT.-EATON SCHOOL	2403 EAT								
CDBG-ENT.-EMER.REHAB.	2403 ER								

		CITY OF HATTIESBURG							. 41
082082 - CDBG REVENUES		REVENUE REPORT							11/1/12
		1 MONTHS ENDING 10/31/12							
		.....CURRENT.....			.....YEAR-TO-DATE.....			ANNUAL	UNREALIZED
	OBJ/SUB	ESTIMATED	ACTUAL	%REV	ESTIMATED	ACTUAL	%REV	ESTIMATE	BALANCE
CDBG-ENT.-FACADE PROG	2403 FAC								
CDBG-ENT.-FULL REHAB.	2403 FR								
CDBG-ENT.-D/T LIGHTING	2403 LIGHT								
CDBG-ENT.-PLANNING	2403 PL								
CDBG-ENT.-PUBLIC SERVI	2403 PS								
CDBG-ENT.-SIDEWALKS	2403 SWLK								
	----------	----------	---------	----	----------	---------	----	----------	----------
CDBG-ENTITLEMENT-200									
HOME ENTITLEMENT-2001	2404								
HOME ENTIT-ADMINISTRAT	2404 ADM								
HOME ENTIT-AFFORD.HOUS	2404 AH								
HOME ENTIT-CHDO ADMIN	2404 CHDOAD								
HOME ENTIT-CHDO SETASI	2404 CHDOSA								
HOME ENTIT-DOWNPAYMENT	2404 DA								
HOME ENTIT-FULL REHAB.	2404 FR								
	----------	----------	---------	----	----------	---------	----	----------	----------
HOME ENTITLEMENT-200									
HOME ENTITLEMENT-2002	2406								
HOME ENTIT-ADMINISTRAT	2406 ADM								
HOME ENTIT-AFFORD.HOUS	2406 AH								
HOME ENTIT-CHDO OPERAT	2406 CHDO								
HOME ENTIT-DOWNPAYMENT	2406 DA								
HOME ENTIT-FULL REHAB.	2406 FR								
HOME ENTIT-HOME BUYER	2406 HBE								
HOME ENTIT	2406 HE								
	----------	----------	---------	----	----------	---------	----	----------	----------
HOME ENTITLEMENT-200									
CDBG-ENTITLEMENT-2002	2407								
CDBG-ENT.-ADMINISTRATI	2407 ADM								
CDBG-ENT.-ADMIN/EMER R	2407 ADMER								
CDBG-ENT.-ADMIN/FULL R	2407 ADMFR								
CDBG ENT.-CHDO OPERATI	2407 CHDO								
CDBG-ENT.-DEMOLITION	2407 DEM								
CDBG-ENT.-DRAINAGE	2407 DRG								
CDBG-ENT.-EATON SCHOOL	2407 EAT								
CDBG-ENT.-EMER.REHAB.	2407 ER								

		CITY OF HATTIESBURG						.	41
082082 - CDBG REVENUES		REVENUE REPORT							11/1/12
		1 MONTHS ENDING 10/31/12							
		.....CURRENT.....			.....YEAR-TO-DATE.....			ANNUAL	UNREALIZED
	OBJ/SUB	ESTIMATED	ACTUAL	%REV	ESTIMATED	ACTUAL	%REV	ESTIMATE	BALANCE
CDBG-ENT.-FACADE PROG	2407 FAC								
CDBG-ENT.-FULL REHAB.	2407 FR								
CDBG-ENT.-PLANNING	2407 PL								
CDBG-ENT.-PUBLIC SERVI	2407 PS								
	----------	----------	---------	----	----------	---------	----	----------	----------
CDBG-ENTITLEMENT-200									
HOME ENTITLEMENT-2003	2408								
HOME ENTIT-ADMINISTRAT	2408 ADM								
HOME ENTIT-AFFORD.HOUS	2408 AH								
HOME ENTIT-CHDO OPERAT	2408 CHDO								
HOME ENTIT-DOWNPAYMENT	2408 DA								
HOME ENTIT-FULL REHAB.	2408 FR								
HOME ENTIT-REHAB.SUBRE	2408 RSC								
	----------	----------	---------	----	----------	---------	----	----------	----------
HOME ENTITLEMENT-200									
CDBG-ENTITLEMENT-2003	2409								
CDBG-ENT.-ADMINISTRATI	2409 ADM								
CDBG-ENT.-ADMIN/EMER R	2409 ADMER								
CDBG-ENT.-ADMIN/FULL R	2409 ADMFR								
CDBG-ENT.-ADMIN/PUBLIC	2409 ADMPS								
CDBG-ENT.-DEMOLITION	2409 DEM								
CDBG-ENT.-EMER ALERT P	2409 EAP								
CDBG-ENT.-EMER.REHAB.	2409 ER								
CDBG-ENT.-FACADE PROG	2409 FAC								
CDBG-ENT.-FULL REHAB.	2409 FR								
CDBG-ENT.-MICRO LOAN P	2409 MLP								
CDBG-ENT.-PLANNING	2409 PL								
CDBG-ENT.-PUBLIC SERVI	2409 PS								
CDBG-ENT.-REHAB.SUBREC	2409 RSC								
CDBG-ENT.-WORLD CHANGE	2409 WC								
	----------	----------	---------	----	----------	---------	----	----------	----------
CDBG-ENTITLEMENT-200									
HOME ENTITLEMENT-2004	2410								
HOME ENTIT-ADMINISTRAT	2410 ADM								
HOME ENTIT-AFFORD.HOUS	2410 AH								
HOME ENTIT-CHDO SETASI	2410 CHDOSA								
HOME ENTIT-DOWNPAYMENT	2410 DA								

		CITY OF HATTIESBURG							. 41
082082 - CDBG REVENUES		REVENUE REPORT							11/1/12
		1 MONTHS ENDING 10/31/12							
		.....CURRENT.....			.....YEAR-TO-DATE.....			ANNUAL	UNREALIZED
	OBJ/SUB	ESTIMATED	ACTUAL	%REV	ESTIMATED	ACTUAL	%REV	ESTIMATE	BALANCE
HOME ENTIT-FULL REHAB.	2410 FR								
HOME ENTIT-REHAB.SUBRE	2410 RSC								
	----------	----------	---------	----	----------	---------	----	----------	----------
HOME ENTITLEMENT-200									
CDBG-ENTITLEMENT-2004	2411								
CDBG-ENT.-ADMINISTRATI	2411 ADM								
CDBG-ENT.-ADMIN/FULL R	2411 ADMFR								
CDBG-ENT.-ADMIN/HSG RE	2411 ADMHR								
CDBG-ENT.-ADMIN/PUBLIC	2411 ADMPS								
CDBG-ENT.-DEMOLITION	2411 DEM								
CDBG-ENT.-EMER ALERT P	2411 EAP								
CDBG-ENT.-ENGINEERING	2411 EP								
CDBG-ENT.-FACADE PROG	2411 FAC								
CDBG-ENT.-FULL REHAB.	2411 FR								
CDBG-ENT.-HOUSING REPR	2411 HR								
CDBG-ENT.-PLANNING	2411 PL								
CDBG-ENT.-WORLD CHANGE	2411 WC								
	----------	----------	---------	----	----------	---------	----	----------	----------
CDBG-ENTITLEMENT-200									
HOME ENTITLEMENT-2005	2412								
HOME ENTIT-ADMINISTRAT	2412 ADM								
HOME ENTIT-AFFORD.HOUS	2412 AH								
HOME ENTIT-CHDO OPERAT	2412 CHDO	3,512	20,000	569%	3,512	20,000	569%	42,151	22,151
HOME ENTIT-DOWNPAYMENT	2412 DA								
HOME ENTIT-FULL REHAB.	2412 FR								
HOME ENTIT-HOUSING REH	2412 HR								
HOME ENTIT-REHAB.SUBRE	2412 RSC								
	----------	----------	---------	----	----------	---------	----	----------	----------
HOME ENTITLEMENT-200		**3,512**	**20,000**	**569%**	**3,512**	**20,000**	**569%**	**42,151**	**22,151**
CDBG-ENTITLEMENT-2005	2413								
CDBG-ENT.-ADMINISTRATI	2413 ADM								
CDBG-ENT.-ADMIN/FULL R	2413 ADMFR								
CDBG-ENT.-ADMIN/HSG RE	2413 ADMHR								
CDBG-ENT.-ADMIN/PUBLIC	2413 ADMPS								
CDBG-ENT.-DEMOLITION	2413 DEM								
CDBG-ENT.-ENGINEERING	2413 EP								

		CITY OF HATTIESBURG							. 41
082082 - CDBG REVENUES		REVENUE REPORT							11/1/12
		1 MONTHS ENDING 10/31/12							
		.....CURRENT.....			.....YEAR-TO-DATE.....			ANNUAL	UNREALIZED
	OBJ/SUB	ESTIMATED	ACTUAL	%REV	ESTIMATED	ACTUAL	%REV	ESTIMATE	BALANCE
CDBG-ENT.-FACADE PROG	2413 FAC								
CDBG-ENT.-FULL REHAB.	2413 FR								
CDBG-ENT.-HOUSING REPR	2413 HR								
CDBG-ENT.-PLANNING	2413 PL								
CDBG-ENT.-PUBLIC SERVI	2413 PS								
CDBG-ENT.-WORLD CHANGE	2413 WC								
	----------	----------	---------	----	----------	---------	----	----------	----------
CDBG-ENTITLEMENT-200									
HOME ENTITLEMENT-2006	2414								
HOME ENTIT-ADMINISTRAT	2414 ADM								
HOME ENTIT-AFFORD.HOUS	2414 AH								
HOME ENTIT-CHDO ADMIN	2414 CHDO								
HOME ENTIT-CHDO SETASI	2414 CHDOSA	2,786	500	17%	2,786	500	17%	33,438	32,938
HOME ENTIT-DOWNPAYMENT	2414 DA								
HOME ENTIT-HOUSING REH	2414 HR								
	----------	----------	---------	----	----------	---------	----	----------	----------
HOME ENTITLEMENT-200		**2,786**	**500**	**17%**	**2,786**	**500**	**17%**	**33,438**	**32,938**
CDBG-ENTITLEMENT-2006	2415								
CDBG-ENT.-ADMINISTRATI	2415 ADM								
CDBG-ENT.-ADMIN/FULL R	2415 ADMFR								
CDBG-ENT.-ADMIN/HSG RE	2415 ADMHR								
CDBG-ENT.-ADMIN/PUBLIC	2415 ADMPS								
CDBG-ENT.-DEMOLITION	2415 DEM								
CDBG-ENT.-DRAINAGE	2415 DRG								
CDBG-ENT.-ENGINEERING	2415 EP								
CDBG-ENT.-FACADE PROG	2415 FAC								
CDBG-ENT.-FULL REHAB.	2415 FR								
CDBG-ENT.-HOUSING REPR	2415 HR								
CDBG-ENT.-PLANNING	2415 PL								
CDBG-ENT.-PUBLIC SERVI	2415 PS								
CDBG-ENT.-WORLD CHANGE	2415 WC								
	----------	----------	---------	----	----------	---------	----	----------	----------
CDBG-ENTITLEMENT-200									
HOME ENTITLEMENT-2007	2416								
HOME ENTIT-ADMINISTRAT	2416 ADM								
HOME ENTIT-AFFORD.HOUS	2416 AH								

		CITY OF HATTIESBURG						.	41
082082 - CDBG REVENUES		REVENUE REPORT							11/1/12
		1 MONTHS ENDING 10/31/12							
		.....CURRENT.....			.....YEAR-TO-DATE.....			ANNUAL	UNREALIZED
	OBJ/SUB	ESTIMATED	ACTUAL	%REV	ESTIMATED	ACTUAL	%REV	ESTIMATE	BALANCE
HOME ENTIT-CHDO ADMIN	2416 CHDOAD								
HOME ENTIT-CHDO SETASI	2416 CHDOSA	3,585			3,585			43,022	43,022
HOME ENTIT-DOWNPAYMENT	2416 DA								
HOME ENTIT-FULL REHAB.	2416 FR	152			152			1,826	1,826
HOME ENTIT-HOUSING REH	2416 HR								
HOME ENTIT-PLANNING	2416 PL								
	----------	----------	---------	----	----------	---------	----	----------	----------
HOME ENTITLEMENT-200		**3,737**			**3,737**			**44,848**	**44,848**
CDBG-ENTITLEMENT-2007	2417								
CDBG-ENT.-ADMINISTRATI	2417 ADM								
CDBG-ENT.-ADMIN/FULL R	2417 ADMFR								
CDBG-ENT.-ADMIN/HSG RE	2417 ADMHR								
CDBG-ENT.-ADMIN/PUBLIC	2417 ADMPS								
CDBG-ENT.-DEMOLITION	2417 DEM								
CDBG-ENT.-ENGINEERING	2417 EP								
CDBG-ENT.-FACADE PROG	2417 FAC								
CDBG-ENT.-FULL REHAB.	2417 FR								
CDBG-ENT.-HOUSING REPR	2417 HR								
CDBG-ENT.-INFRASTRUC P	2417 IS								
CDBG-ENT.-PLANNING	2417 PL								
CDBG-ENT.-PUBLIC SERVI	2417 PS								
CDBG-ENT.-WORLD CHANGE	2417 WC								
	----------	----------	---------	----	----------	---------	----	----------	----------
CDBG-ENTITLEMENT-200									
HOME ENTITLEMENT-2008	2418								
HOME ENTIT-ADMINISTRAT	2418 ADM								
HOME ENTIT-AFFORD.HOUS	2418 AH								
HOME ENTIT-CHDO ADMIN	2418 CHDOAD								
HOME ENTIT-CHDO SETASI	2418 CHDOSA	776			776			9,319	9,319
HOME ENTIT-DOWNPAYMENT	2418 DA								
HOME ENTIT-HOUSING REH	2418 HR								
	----------	----------	---------	----	----------	---------	----	----------	----------
HOME ENTITLEMENT-200		**776**			**776**			**9,319**	**9,319**
CDBG-ENTITLEMENT-2008	2419								
CDBG-ENT.-ADMINISTRATI	2419 ADM								
CDBG-ENT.-ADMIN/FULL R	2419 ADMFR								
CDBG-ENT.-ADMIN/HSG RE	2419 ADMHR								

		CITY OF HATTIESBURG							. 41
082082 - CDBG REVENUES		REVENUE REPORT							11/1/12
		1 MONTHS ENDING 10/31/12							
		.....CURRENT.....			.....YEAR-TO-DATE.....			ANNUAL	UNREALIZED
	OBJ/SUB	ESTIMATED	ACTUAL	%REV	ESTIMATED	ACTUAL	%REV	ESTIMATE	BALANCE
CDBG-ENT.-ADMIN/PUBLIC	2419 ADMPS								
CDBG-ENT.-BLUE ROOFS	2419 BR	7,681	1,212	15%	7,681	1,212	15%	92,181	90,969
CDBG-ENT.-DEMOLITION	2419 DEM								
CDBG-ENT.-DOWNTOWN LIG	2419 DL								
CDBG-ENT.-DRAINAGE	2419 DRG								
CDBG-ENT.-ENGINEERING	2419 EP								
CDBG-ENT.-FACADE PROG	2419 FAC								
CDBG-ENT.-FULL REHAB.	2419 FR								
CDBG-ENT.-HOUSING REPR	2419 HR		9,930			9,930			(9,930)
CDBG-ENT.-INFRASTRUC P	2419 IS								
CDBG-ENT.-PLANNING	2419 PL								
CDBG-ENT.-PUBLIC SERVI	2419 PS								
CDBG-ENT.-WORLD CHANGE	2419 WC								
	----------	----------	---------	----	----------	---------	----	----------	----------
CDBG-ENTITLEMENT-200		**7,681**	**11,142**	**145%**	**7,681**	**11,142**	**145%**	**92,181**	**81,039**
HOME ENTITLEMENT-2009	2420								
HOME ENTIT-ADMINISTRAT	2420 ADM								
HOME ENTIT-AFFORD.HOUS	2420 AH								
HOME ENTIT-CHDO ADMIN	2420 CHDO								
HOME ENTIT-CHDO SETASI	2420 CHDOSA	1,892			1,892			22,713	22,713
HOME ENTIT-DOWNPAYMENT	2420 DA								
HOME ENTIT-HOUSING REH	2420 HR								
HOME ENTIT-RECONS-SA P	2420 RECSA	1,911	1,600	83%	1,911	1,600	83%	22,941	21,341
	----------	----------	---------	----	----------	---------	----	----------	----------
HOME ENTITLEMENT-200		**3,804**	**1,600**	**42%**	**3,804**	**1,600**	**42%**	**45,654**	**44,054**
CDBG-ENTITLEMENT-2009	2421								
CDBG-ENT.-ADMINISTRATI	2421 ADM								
CDBG-ENT.-ADM DISABIL	2421 ADMDA								
CDBG-ENT.-ADMIN/FULL R	2421 ADMFR								
CDBG-ENT.-ADMIN/HSG RE	2421 ADMHR								
CDBG-ENT.-ADMIN/PUBLIC	2421 ADMPS								
CDBG-ENT.-DEMOLITION	2421 DEM								
CDBG-ENT.-DOWNTOWN LIG	2421 DL								
CDBG-ENT.-ENGINEERING	2421 EP								
CDBG-ENT.-FACADE PROG	2421 FAC								
CDBG-ENT.-FACILITIES	2421 FC	4,838			4,838			58,066	58,066

		CITY OF HATTIESBURG							. 41
082082 - CDBG REVENUES		REVENUE REPORT							11/1/12
		1 MONTHS ENDING 10/31/12							
		.....CURRENT.....			.....YEAR-TO-DATE.....			ANNUAL	UNREALIZED
	OBJ/SUB	ESTIMATED	ACTUAL	%REV	ESTIMATED	ACTUAL	%REV	ESTIMATE	BALANCE
CDBG-ENT.-FULL REHAB.	2421 FR								
CDBG-ENT.-HOUSING REPR	2421 HR								
CDBG-ENT.-INFRASTRUC P	2421 IS								
CDBG-ENT.-PLANNING	2421 PL								
CDBG-ENT.-PUBLIC SERVI	2421 PS								
CDBG-ENT.-WORLD CHANGE	2421 WC								
	----------	---	---	---	---	---	---	---	---
CDBG-ENTITLEMENT-200		**4,838**			**4,838**			**58,066**	**58,066**
HOME ENTITLEMENT-2010	2422								
HOME ENTIT-ADMINISTRAT	2422 ADM								
HOME ENTIT-CHDO ADMIN	2422 CHDO	112			112			1,346	1,346
HOME ENTIT-CHDO SETASI	2422 CHDOSA	4,699			4,699			56,398	56,398
HOME ENTIT-DWNPYMNT AS	2422 DA	5,000			5,000			60,000	60,000
HOME ENTIT-FULL REHAB	2422 FR	6,840			6,840			82,083	82,083
	----------	---	---	---	---	---	---	---	---
HOME ENTITLEMENT-201		**16,652**			**16,652**			**199,827**	**199,827**
CDBG-ENTITLEMENT-2010	2423								
CDBG-ENT.-ADMINISTRATI	2423 ADM								
CDBG-ENT.-ADM DISABIL	2423 ADMDISAD								
CDBG-ENT.-DEMOLITION	2423 DEM								
CDBG-ENT.-FACADE PROG	2423 FAC	3,750			3,750			45,000	45,000
CDBG-ENT.-HOUSING REPR	2423 HR								
CDBG-ENT.-INFRASTRUC P	2423 IS								
CDBG-ENT.-PROJECT DELI	2423 PD								
CDBG-ENT.-PUBLIC SERVI	2423 PS								
	----------	---	---	---	---	---	---	---	---
CDBG-ENTITLEMENT-201		**3,750**			**3,750**			**45,000**	**45,000**
HOME ENTITLEMENT-2011	2424								
HOME ENTIT-ADMINISTRAT	2424 ADM								
HOME ENTIT-CHDO SETASI	2424 CHDOSA	4,128			4,128			49,539	49,539
HOME ENTIT-HOUSING PRO	2424 HP	17,609	24,650	139%	17,609	24,650	139%	211,312	186,662
	----------	---	---	---	---	---	---	---	---
HOME ENTITLEMENT-201		**21,737**	**24,650**	**113%**	**21,737**	**24,650**	**113%**	**260,851**	**236,201**
CDBG-ENTITLEMENT-2011	2425								
CDBG-ENT.-ADMINISTRATI	2425 ADM								
CDBG-ENT.-ADM DISABIL	2425 ADMDISAD								
CDBG-ENT.-DEMOLITION	2425 DEM	1,603			1,603			19,236	19,236

		CITY OF HATTIESBURG							. 41
082082 - CDBG REVENUES		REVENUE REPORT							11/1/12
		1 MONTHS ENDING 10/31/12							
		.....CURRENT.....			.....YEAR-TO-DATE.....			ANNUAL	UNREALIZED
	OBJ/SUB	ESTIMATED	ACTUAL	%REV	ESTIMATED	ACTUAL	%REV	ESTIMATE	BALANCE
CDBG-ENT.-HOUSING REPR	2425 HR	14,462			14,462			173,544	173,544
CDBG-ENT.-INFRASTRUC P	2425 IS	4,166			4,166			50,000	50,000
CDBG-ENT.-MICROENT PRO	2425 MA	1,750			1,750			21,000	21,000
CDBG-ENT.-PROJ DELIVER	2425 PD								
CDBG-ENT.-PUBLIC SERVI	2425 PS		1,374			1,374			(1,374)
	----------	----------	---------	----	----------	---------	----	----------	----------
CDBG-ENTITLEMENT-201		**21,981**	**1,374**	**6%**	**21,981**	**1,374**	**6%**	**263,780**	**262,406**
HOME ENTITLEMENT-2012	2426								
HOME ENTIT-ADMINISTRAT	2426 ADM		7,377			7,377			(7,377)
HOME ENTIT-CHDO SETASI	2426 CHDOSA								
HOME ENTIT-HOUSING PRO	2426 HP								
	----------	----------	---------	----	----------	---------	----	----------	----------
HOME ENTITLEMENT-201			**7,377**			**7,377**			**(7,377)**
CDBG-ENTITLEMENT-2012	2427								
CDBG-ENT.-ADMINISTRATI	2427 ADM		31,448			31,448			(31,448)
CDBG-ENT.-DEMOLITION	2427 DEM								
CDBG-ENT.-HOUSING PROG	2427 HP								
CDBG-ENT.-MICROENT PRO	2427 MA		4,180			4,180			(4,180)
CDBG-ENT.-PROJECT DELI	2427 PD		7,014			7,014			(7,014)
CDBG-ENT.-PUBLIC SERVI	2427 PS		7,589			7,589			(7,589)
	----------	----------	---------	----	----------	---------	----	----------	----------
CDBG-ENTITLEMENT-201			**50,230**			**50,230**			**(50,230)**
HOME REVOLVING LOANS	2495								
MDA AM DREAM D/P (ADDI)	2497								
MISCELLANEOUS GRANTS	2740								
SALVATION ARMY	2740 04								
	----------	----------	---------	----	----------	---------	----	----------	----------
MISCELLANEOUS GRANTS									
	----------	----------	---------	----	----------	---------	----	----------	----------
FEDERAL GRANTS		**92,956**	**116,873**	**125%**	**92,956**	**116,873**	**125%**	**1,115,479**	**998,606**
TRANSFERS	380A								
TRANSFERS FROM OTHR FND	3800								
T/F GENERAL FUND	3800 01								
T/F WATER & SEWER O &	3800 09								
T/F MUN.ROAD & BRIDGE	3800 72								
	----------	----------	---------	----	----------	---------	----	----------	----------

		CITY OF HATTIESBURG							. 41
082082 - CDBG REVENUES		REVENUE REPORT							11/1/12
		1 MONTHS ENDING 10/31/12							
		.....CURRENT.....			.....YEAR-TO-DATE.....			ANNUAL	UNREALIZED
	OBJ/SUB	ESTIMATED	ACTUAL	%REV	ESTIMATED	ACTUAL	%REV	ESTIMATE	BALANCE
TRANSFERS FROM OTHR									
	----------	----------	---------	----	----------	---------	----	----------	----------
TRANSFERS									
NON-REVENUE RECEIPTS	390A								
REFUND & RECOVERY	3965								
	----------	----------	---------	----	----------	---------	----	----------	----------
NON-REVENUE RECEIPTS									
BEGINNING CASH BALANCE	399A								
APPROPRIABLE FUND BALAN	3999	467			467			5,608	5,608
	----------	----------	---------	----	----------	---------	----	----------	----------
BEGINNING CASH BALANC		**467**			**467**			**5,608**	**5,608**
	----------	----------	---------	----	----------	---------	----	----------	----------
REVENUES		**93,423**	**116,873**	**125%**	**93,423**	**116,873**	**125%**	**1,121,087**	**1,004,214**

		CITY OF HATTIESBURG							. 48
087087 - INDUSTRIALPK REVENUES		REVENUE REPORT							11/1/12
		1 MONTHS ENDING 10/31/12							
		.....CURRENT.....			.....YEAR-TO-DATE.....			ANNUAL	UNREALIZED
	OBJ/SUB	ESTIMATED	ACTUAL	%REV	ESTIMATED	ACTUAL	%REV	ESTIMATE	BALANCE
REVENUES	200								
OTHER PERMITS & FEES	2230								
MISC. PERMITS & FEES	2299								
	---	---	---	---	---	---	---	---	---
OTHER PERMITS & FEES									
FEDERAL GRANTS	230B								
EDA GRANT-MASTER PLAN	2333								
EDA GRANT-OWENS/ILL PRO	2338								
	---	---	---	---	---	---	---	---	---
FEDERAL GRANTS									
STATE GRANTS	250B								
OWENS/ILL PROJ-RR SPUR	2541								
USA YEAST PROJ-RR SPUR	2542								
	---	---	---	---	---	---	---	---	---
STATE GRANTS									
MISCELLANEOUS	340A								
INTEREST EARNINGS	3400								
CERTIFICATES OF DEPOSI	3402								
SAVINGS ACCOUNT/MMA	3405		97			97			(97)
TREASURY NOTES	3409								
	---	---	---	---	---	---	---	---	---
INTEREST EARNINGS			**97**			**97**			**(97)**
RENTS AND ROYALTIES	3410								
LAND	3411								
LAMAR OUTDOOR ADVERTI	3411 05								
	---	---	---	---	---	---	---	---	---
LAND									
BUILDING	3412								
BROWN BOTTLING (PEPSI	3412 10								
L&S REALTORS	3412 11								
KOHLER	3412 17								
JPM OF MS., INC.	3412 20								
SUNBEAM/OSTER	3412 23								
	---	---	---	---	---	---	---	---	---
BUILDING									
	---	---	---	---	---	---	---	---	---
RENTS AND ROYALTIES									

		CITY OF HATTIESBURG							. 48
087087 - INDUSTRIALPK REVENUES		REVENUE REPORT							11/1/12
		1 MONTHS ENDING 10/31/12							
		.....CURRENT.....			.....YEAR-TO-DATE.....			ANNUAL	UNREALIZED
	OBJ/SUB	ESTIMATED	ACTUAL	%REV	ESTIMATED	ACTUAL	%REV	ESTIMATE	BALANCE
CONTRIBUTIONS-PUBLIC	3450								
CONTRIBUTIONS-FORREST	3455								
CONTRIBUTIONS-CITY	3456								
CONTRIBUTIONS-ADP	3457								
CONTRIBUTIONS-PRVEPA	3458								
	---	---	---	---	---	---	---	---	---
CONTRIBUTIONS-PUBLIC									
	---	---	---	---	---	---	---	---	---
MISCELLANEOUS			**97**			**97**			**(97)**
TRANSFERS	380A								
TRANSFERS FROM OTHR FND	3800								
	---	---	---	---	---	---	---	---	---
TRANSFERS									
NON-REVENUE RECEIPTS	390A								
SALE OF BONDS	3910								
BOND PROCEEDS	3912								
ACCRUED INTEREST	3915								
OTHER BOND INCOME	3919								
CAP STATE LOAN'96-CIT	3919 CSL96C								
CAP STATE LOAN'96-FOR	3919 CSL96F								
CAP STATE LOAN'97-CIT	3919 CSL97C								
CAP STATE LOAN'97-FOR	3919 CSL97F								
MBIA BONDS	3919 MBIA								
	---	---	---	---	---	---	---	---	---
OTHER BOND INCOME									
	---	---	---	---	---	---	---	---	---
SALE OF BONDS									
SALE OF REAL ESTATE	3920								
SALE OF EASEMENTS	3925								
SALE OF MISC. ITEMS	3945								
REFUND & RECOVERY	3965								
	---	---	---	---	---	---	---	---	---
NON-REVENUE RECEIPTS									
BEGINNING CASH BALANCE	399A								
APPROPRIABLE FUND BALAN	3999								
	---	---	---	---	---	---	---	---	---

		CITY OF HATTIESBURG							. 48
087087 - INDUSTRIALPK REVENUES		REVENUE REPORT							11/1/12
		1 MONTHS ENDING 10/31/12							
		.....CURRENT.....			.....YEAR-TO-DATE.....			ANNUAL	UNREALIZED
	OBJ/SUB	ESTIMATED	ACTUAL	%REV	ESTIMATED	ACTUAL	%REV	ESTIMATE	BALANCE
BEGINNING CASH BALANC									
	----------	----------	---------	----	----------	---------	----	----------	----------
REVENUES			**97**			**97**			**(97)**

		CITY OF HATTIESBURG							. 50
090090 - 2008 D/T LIGHTING-REVENUES		REVENUE REPORT							11/1/12
		1 MONTHS ENDING 10/31/12							
		.....CURRENT.....			.....YEAR-TO-DATE.....			ANNUAL	UNREALIZED
	OBJ/SUB	ESTIMATED	ACTUAL	%REV	ESTIMATED	ACTUAL	%REV	ESTIMATE	BALANCE
REVENUES	200								
MISCELLANEOUS	340A								
INTEREST EARNINGS	3400								
CERTIFICATES OF DEPOSI	3402								
SAVINGS ACCOUNT/MMA	3405								
REPURCHASE AGREEMENTS	3408								
TREASURY NOTES	3409								
	----------	----------	---------	----	----------	---------	----	----------	----------
INTEREST EARNINGS									
	----------	----------	---------	----	----------	---------	----	----------	----------
MISCELLANEOUS									
TRANSFERS	380A								
TRANSFERS FROM OTHR FND	3800								
T/F TAX COLLECTORS-GPT	3800 27								
	----------	----------	---------	----	----------	---------	----	----------	----------
TRANSFERS FROM OTHR									
	----------	----------	---------	----	----------	---------	----	----------	----------
TRANSFERS									
NON-REVENUE RECEIPTS	390A								
SALE OF BONDS	3910								
BOND PROCEEDS	3912								
ACCRUED INTEREST	3915								
	----------	----------	---------	----	----------	---------	----	----------	----------
SALE OF BONDS									
REFUND & RECOVERY	3965								
NOTE PROCEEDS	3975								
	----------	----------	---------	----	----------	---------	----	----------	----------
NON-REVENUE RECEIPTS									
BEGINNING CASH BALANCE	399A								
APPROPRIABLE FUND BALAN	3999								
	----------	----------	---------	----	----------	---------	----	----------	----------
BEGINNING CASH BALANC									
	----------	----------	---------	----	----------	---------	----	----------	----------
REVENUES									

		CITY OF HATTIESBURG							. 51
091091 - TIF CONST-REVENUES		REVENUE REPORT							11/1/12
		1 MONTHS ENDING 10/31/12							
		.....CURRENT.....			.....YEAR-TO-DATE.....			ANNUAL	UNREALIZED
	OBJ/SUB	ESTIMATED	ACTUAL	%REV	ESTIMATED	ACTUAL	%REV	ESTIMATE	BALANCE
REVENUES	200								
MISCELLANEOUS	340A								
INTEREST EARNINGS	3400								
CERTIFICATES OF DEPOSI	3402								
SAVINGS ACCOUNT/MMA	3405								
REPURCHASE AGREEMENTS	3408								
TREASURY NOTES	3409								
	---	---	---	---	---	---	---	---	---
INTEREST EARNINGS									
	---	---	---	---	---	---	---	---	---
MISCELLANEOUS									
NON-REVENUE RECEIPTS	390A								
SALE OF BONDS	3910								
BOND PROCEEDS	3912								
ACCRUED INTEREST	3915								
	---	---	---	---	---	---	---	---	---
SALE OF BONDS									
REFUND & RECOVERY	3965								
	---	---	---	---	---	---	---	---	---
NON-REVENUE RECEIPTS									
BEGINNING CASH BALANCE	399A								
APPROPRIABLE FUND BALAN	3999								
	---	---	---	---	---	---	---	---	---
BEGINNING CASH BALANC									
	---	---	---	---	---	---	---	---	---
REVENUES									

		CITY OF HATTIESBURG							. 52
094094 - 2012 W&S REVENUE BOND CONSTR		REVENUE REPORT							11/1/12
		1 MONTHS ENDING 10/31/12							
		.....CURRENT.....			.....YEAR-TO-DATE.....			ANNUAL	UNREALIZED
	OBJ/SUB	ESTIMATED	ACTUAL	%REV	ESTIMATED	ACTUAL	%REV	ESTIMATE	BALANCE
REVENUES	200								
MISCELLANEOUS	340A								
INTEREST EARNINGS	3400								
CERTIFICATES OF DEPOSI	3402								
SAVINGS ACCOUNT/MMA	3405		73			73			(73)
REPURCHASE AGREEMENTS	3408								
TREASURY NOTES	3409								
	---	---	---	---	---	---	---	---	---
INTEREST EARNINGS			**73**			**73**			**(73)**
	---	---	---	---	---	---	---	---	---
MISCELLANEOUS			**73**			**73**			**(73)**
NON-REVENUE RECEIPTS	390A								
SALE OF BONDS	3910								
BOND PROCEEDS	3912								
ACCRUED INTEREST	3915								
	---	---	---	---	---	---	---	---	---
SALE OF BONDS									
	---	---	---	---	---	---	---	---	---
NON-REVENUE RECEIPTS									
BEGINNING CASH BALANCE	399A								
APPROPRIABLE FUND BALAN	3999								
	---	---	---	---	---	---	---	---	---
BEGINNING CASH BALANC									
	---	---	---	---	---	---	---	---	---
REVENUES			**73**			**73**			**(73)**

		CITY OF HATTIESBURG							. 53
095095 - 2001 BOND CONSTR REVENUES		REVENUE REPORT							11/1/12
		1 MONTHS ENDING 10/31/12							
		.....CURRENT.....			.....YEAR-TO-DATE.....			ANNUAL	UNREALIZED
	OBJ/SUB	ESTIMATED	ACTUAL	%REV	ESTIMATED	ACTUAL	%REV	ESTIMATE	BALANCE
REVENUES	200								
STATE GRANTS	250B								
ARTS COMMISSION GRANT	2521								
	---	---	---	---	---	---	---	---	---
STATE GRANTS									
MISCELLANEOUS	340A								
INTEREST EARNINGS	3400								
CERTIFICATES OF DEPOSI	3402								
SAVINGS ACCOUNT/MMA	3405		22			22			(22)
REPURCHASE AGREEMENTS	3408								
TREASURY NOTES	3409								
	---	---	---	---	---	---	---	---	---
INTEREST EARNINGS			**22**			**22**			**(22)**
CONTRIBUTIONS-PUBLIC	3450								
CONTRIBUTIONS-FORREST	3455								
	---	---	---	---	---	---	---	---	---
CONTRIBUTIONS-PUBLIC									
CONTRIBUTIONS-PRIVATE	3460								
CONTRIB-H'BURG. CONV.	3465								
CONTRIB-OTHER	3469								
	---	---	---	---	---	---	---	---	---
CONTRIBUTIONS-PRIVAT									
	---	---	---	---	---	---	---	---	---
MISCELLANEOUS			**22**			**22**			**(22)**
TRANSFERS	380A								
TRANSFERS FROM OTHR FND	3800								
T/F GENERAL FUND	3800 01								
	---	---	---	---	---	---	---	---	---
TRANSFERS FROM OTHR									
	---	---	---	---	---	---	---	---	---
TRANSFERS									
NON-REVENUE RECEIPTS	390A								
SALE OF BONDS	3910								
BOND PROCEEDS	3912								
ACCRUED INTEREST	3915								
	---	---	---	---	---	---	---	---	---
SALE OF BONDS									

		CITY OF HATTIESBURG							. 53
095095 - 2001 BOND CONSTR REVENUES		REVENUE REPORT							11/1/12
		1 MONTHS ENDING 10/31/12							
		.....CURRENT.....			.....YEAR-TO-DATE.....			ANNUAL	UNREALIZED
	OBJ/SUB	ESTIMATED	ACTUAL	%REV	ESTIMATED	ACTUAL	%REV	ESTIMATE	BALANCE
REFUND & RECOVERY	3965								
	---	---	---	---	---	---	---	---	---
NON-REVENUE RECEIPTS									
BEGINNING CASH BALANCE	399A								
APPROPRIABLE FUND BALAN	3999	15,608			15,608			187,300	187,300
	---	---	---	---	---	---	---	---	---
BEGINNING CASH BALANC		**15,608**			**15,608**			**187,300**	**187,300**
	---	---	---	---	---	---	---	---	---
REVENUES		**15,608**	**22**		**15,608**	**22**		**187,300**	**187,278**

		CITY OF HATTIESBURG							. 54
096096 - MDB CAPITALPROJ REVENUES		REVENUE REPORT							11/1/12
		1 MONTHS ENDING 10/31/12							
		.....CURRENT.....			.....YEAR-TO-DATE.....			ANNUAL	UNREALIZED
	OBJ/SUB	ESTIMATED	ACTUAL	%REV	ESTIMATED	ACTUAL	%REV	ESTIMATE	BALANCE
REVENUES	200								
FEDERAL GRANTS	230B								
HUD GRANT-CHAIN PARK PH	2353	3,517			3,517			42,207	42,207
US CORPS OF ENGR PROJEC	2354								
FEDERAL TRANSIT ADM.	2355								
	---	---	---	---	---	---	---	---	---
FEDERAL GRANTS		**3,517**			**3,517**			**42,207**	**42,207**
STATE GRANTS	250B								
ARCHIVES & HISTORY	2505								
MDOT GRANT-4TH ST WIDEN	2506								
MDOT GRANT-CHAIN PARK	2507								
MDOT ARRA-CHAIN PARK	2543								
	---	---	---	---	---	---	---	---	---
STATE GRANTS									
MISCELLANEOUS	340A								
INTEREST EARNINGS	3400								
SAVINGS ACCOUNT/MMA	3405		7			7			(7)
	---	---	---	---	---	---	---	---	---
INTEREST EARNINGS			**7**			**7**			**(7)**
	---	---	---	---	---	---	---	---	---
MISCELLANEOUS			**7**			**7**			**(7)**
TRANSFERS	380A								
TRANSFERS FROM OTHR FND	3800								
T/F GENERAL FUND	3800 01								
	---	---	---	---	---	---	---	---	---
TRANSFERS FROM OTHR									
	---	---	---	---	---	---	---	---	---
TRANSFERS									
NON-REVENUE RECEIPTS	390A								
REFUND & RECOVERY	3965								
NOTE PROCEEDS	3975								
DEPOT PROJECT	3975 01								
WATER & SEWER IMPR	3975 02								
FIRE/POLICE STATION	3975 03								
DRAINAGE PROJECTS	3975 04								
LEGAL COSTS	3975 05								
MDOT GRANT PROJECTS	3975 06								

		CITY OF HATTIESBURG							. 54
096096 - MDB CAPITALPROJ REVENUES		REVENUE REPORT							11/1/12
		1 MONTHS ENDING 10/31/12							
		.....CURRENT.....			.....YEAR-TO-DATE.....			ANNUAL	UNREALIZED
	OBJ/SUB	ESTIMATED	ACTUAL	%REV	ESTIMATED	ACTUAL	%REV	ESTIMATE	BALANCE
	---	---	---	---	---	---	---	---	---
NOTE PROCEEDS									
	---	---	---	---	---	---	---	---	---
NON-REVENUE RECEIPTS									
BEGINNING CASH BALANCE	399A								
APPROPRIABLE FUND BALAN	3999	2,500			2,500			30,000	30,000
	---	---	---	---	---	---	---	---	---
BEGINNING CASH BALANC		**2,500**			**2,500**			**30,000**	**30,000**
	---	---	---	---	---	---	---	---	---
REVENUES		**6,017**	**7**		**6,017**	**7**		**72,207**	**72,200**

		CITY OF HATTIESBURG							. 55
098098 - K.P.ZOO CAPITAL REVENUES		REVENUE REPORT							11/1/12
		1 MONTHS ENDING 10/31/12							
		.....CURRENT.....			.....YEAR-TO-DATE.....			ANNUAL	UNREALIZED
	OBJ/SUB	ESTIMATED	ACTUAL	%REV	ESTIMATED	ACTUAL	%REV	ESTIMATE	BALANCE
REVENUES	200								
INTER-GOVERNMNTL REVENUE	230A								
STATE GRANTS	250B								
ZOO IMPROVEMENTS	2560								
	---	---	---	---	---	---	---	---	---
STATE GRANTS									
CHARGES FOR SERVICES	280A								
CULTURE AND RECREATION	3100								
KPZ SPECIAL EVENTS	3127								
LION/TIGER FUND RAISE	3127 01								
TODDLER CLASS	3127 02								
ZOO CAMP	3127 03								
	---	---	---	---	---	---	---	---	---
KPZ SPECIAL EVENTS									
	---	---	---	---	---	---	---	---	---
CULTURE AND RECREATI									
	---	---	---	---	---	---	---	---	---
CHARGES FOR SERVICES									
MISCELLANEOUS	340A								
INTEREST EARNINGS	3400								
CERTIFICATES OF DEPOSI	3402								
DIVIDENDS	3404								
SAVINGS ACCOUNT/MMA	3405		9			9			(9)
	---	---	---	---	---	---	---	---	---
INTEREST EARNINGS			**9**			**9**			**(9)**
CONTRIBUTIONS-PUBLIC	3450								
CONTRIBUTIONS-FORREST	3455								
	---	---	---	---	---	---	---	---	---
CONTRIBUTIONS-PUBLIC									
CONTRIBUTIONS-PRIVATE	3460								
CONTRIB-H'BURG. CONV.	3465								
CONTRIB-CEMETERY PROJ	3467								
CONTRIB-PKS/REC. PROJ	3468								
CONTRIB-OTHER	3469								
	---	---	---	---	---	---	---	---	---
CONTRIBUTIONS-PRIVAT									
GAIN ON SALE OF INVESTM	3550								

		CITY OF HATTIESBURG							. 55
098098 - K.P.ZOO CAPITAL REVENUES		REVENUE REPORT							11/1/12
		1 MONTHS ENDING 10/31/12							
		.....CURRENT.....			.....YEAR-TO-DATE.....			ANNUAL	UNREALIZED
	OBJ/SUB	ESTIMATED	ACTUAL	%REV	ESTIMATED	ACTUAL	%REV	ESTIMATE	BALANCE
	---	---	---	---	---	---	---	---	---
MISCELLANEOUS			**9**			**9**			**(9)**
TRANSFERS	380A								
TRANSFERS FROM OTHR FND	3800								
T/F GENERAL FUND	3800 01								
	---	---	---	---	---	---	---	---	---
TRANSFERS FROM OTHR									
	---	---	---	---	---	---	---	---	---
TRANSFERS									
NON-REVENUE RECEIPTS	390A								
SALE OF TIMBER	3923								
SALE OF SCRAP MATERIAL	3943								
SALE OF ZOOLOGICAL ANIM	3949								
REFUND & RECOVERY	3965								
	---	---	---	---	---	---	---	---	---
NON-REVENUE RECEIPTS									
BEGINNING CASH BALANCE	399A								
APPROPRIABLE FUND BALAN	3999	8,333			8,333			100,000	100,000
	---	---	---	---	---	---	---	---	---
BEGINNING CASH BALANC		**8,333**			**8,333**			**100,000**	**100,000**
	---	---	---	---	---	---	---	---	---
REVENUES		**8,333**	**9**		**8,333**	**9**		**100,000**	**99,991**

		CITY OF HATTIESBURG							. 57
099099 - 2010 W & SGO BOND REVENUES		REVENUE REPORT							11/1/12
		1 MONTHS ENDING 10/31/12							
		.....CURRENT.....			.....YEAR-TO-DATE.....			ANNUAL	UNREALIZED
	OBJ/SUB	ESTIMATED	ACTUAL	%REV	ESTIMATED	ACTUAL	%REV	ESTIMATE	BALANCE
REVENUES	200								
INTER-GOVERNMNTL REVENUE	230A								
FEDERAL GRANTS	230B								
US CORPS OF ENGR PROJEC	2354	87,470			87,470			1,049,651	1,049,651
EPA-VETERANS DRIVE PROJ	2356								
	---	---	---	---	---	---	---	---	---
FEDERAL GRANTS		**87,470**			**87,470**			**1,049,651**	**1,049,651**
MISCELLANEOUS	340A								
INTEREST EARNINGS	3400								
CERTIFICATES OF DEPOSI	3402								
SAVINGS ACCOUNT/MMA	3405		22			22			(22)
REPURCHASE AGREEMENTS	3408								
TREASURY NOTES	3409								
	---	---	---	---	---	---	---	---	---
INTEREST EARNINGS			**22**			**22**			**(22)**
	---	---	---	---	---	---	---	---	---
MISCELLANEOUS			**22**			**22**			**(22)**
NON-REVENUE RECEIPTS	390A								
SALE OF BONDS	3910								
BOND PROCEEDS	3912								
ACCRUED INTEREST	3915								
	---	---	---	---	---	---	---	---	---
SALE OF BONDS									
	---	---	---	---	---	---	---	---	---
NON-REVENUE RECEIPTS									
BEGINNING CASH BALANCE	399A								
APPROPRIABLE FUND BALAN	3999	20,833			20,833			250,000	250,000
	---	---	---	---	---	---	---	---	---
BEGINNING CASH BALANC		**20,833**			**20,833**			**250,000**	**250,000**
	---	---	---	---	---	---	---	---	---
REVENUES		**108,304**	**22**		**108,304**	**22**		**1,299,651**	**1,299,629**

		CITY OF HATTIESBURG							. 58
105105 - 2006 W&S BOND CONSTR REVENUES		REVENUE REPORT							11/1/12
		1 MONTHS ENDING 10/31/12							
		.....CURRENT.....			.....YEAR-TO-DATE.....			ANNUAL	UNREALIZED
	OBJ/SUB	ESTIMATED	ACTUAL	%REV	ESTIMATED	ACTUAL	%REV	ESTIMATE	BALANCE
REVENUES	200								
MISCELLANEOUS	340A								
INTEREST EARNINGS	3400								
CERTIFICATES OF DEPOSI	3402								
SAVINGS ACCOUNT/MMA	3405								
REPURCHASE AGREEMENTS	3408								
TREASURY NOTES	3409								
	----------	----------	---------	----	----------	---------	----	----------	----------
INTEREST EARNINGS									
	----------	----------	---------	----	----------	---------	----	----------	----------
MISCELLANEOUS									
NON-REVENUE RECEIPTS	390A								
SALE OF BONDS	3910								
BOND PROCEEDS	3912								
ACCRUED INTEREST	3915								
	----------	----------	---------	----	----------	---------	----	----------	----------
SALE OF BONDS									
	----------	----------	---------	----	----------	---------	----	----------	----------
NON-REVENUE RECEIPTS									
BEGINNING CASH BALANCE	399A								
APPROPRIABLE FUND BALAN	3999								
	----------	----------	---------	----	----------	---------	----	----------	----------
BEGINNING CASH BALANC									
	----------	----------	---------	----	----------	---------	----	----------	----------
REVENUES									

		CITY OF HATTIESBURG							. 59
107107 - SPEC.SALESTAX REVENUES		REVENUE REPORT							11/1/12
		1 MONTHS ENDING 10/31/12							
		.....CURRENT.....			.....YEAR-TO-DATE.....			ANNUAL	UNREALIZED
	OBJ/SUB	ESTIMATED	ACTUAL	%REV	ESTIMATED	ACTUAL	%REV	ESTIMATE	BALANCE
REVENUES	200								
INTER-GOVERNMNTL REVENUE	230A								
STATE-SHARED REVENUE	260B								
SALES TAX-MOTEL	2605		48,675			48,675			(48,675)
SALES TAX-FOOD & BEVERA	2607		362,438			362,438			(362,438)
	---	---	---	---	---	---	---	---	---
STATE-SHARED REVENUE			**411,112**			**411,112**			**(411,112)**
NON-REVENUE RECEIPTS	390A								
	---	---	---	---	---	---	---	---	---
REVENUES			**411,112**			**411,112**			**(411,112)**

		CITY OF HATTIESBURG							. 60
109109 - GROUP INS.TRUST REVENUES		REVENUE REPORT							11/1/12
		1 MONTHS ENDING 10/31/12							
		.....CURRENT.....			.....YEAR-TO-DATE.....			ANNUAL	UNREALIZED
	OBJ/SUB	ESTIMATED	ACTUAL	%REV	ESTIMATED	ACTUAL	%REV	ESTIMATE	BALANCE
REVENUES	200								
MISCELLANEOUS	340A								
INTEREST EARNING	3400								
SAVINGS ACCOUNT/MMA	3405		27			27			(27)
	---	---	---	---	---	---	---	---	---
INTEREST EARNING			**27**			**27**			**(27)**
	---	---	---	---	---	---	---	---	---
MISCELLANEOUS			**27**			**27**			**(27)**
TRANSFERS	380A								
TRANSFERS FROM OTHR FND	3800								
T/F GENERAL FUND	3800 01								
	---	---	---	---	---	---	---	---	---
TRANSFERS FROM OTHR									
	---	---	---	---	---	---	---	---	---
TRANSFERS									
NON-REVENUE RECEIPTS	390A								
REFUND & RECOVERY	3965		262			262			(262)
HOSP.INS.-P/R DISTRIB	3966		304,897			304,897			(304,897)
	---	---	---	---	---	---	---	---	---
NON-REVENUE RECEIPTS			**305,159**			**305,159**			**(305,159)**
	---	---	---	---	---	---	---	---	---
REVENUES			**305,186**			**305,186**			**(305,186)**

City of Hattiesburg, MS

200 Forrest St.
P.O. Box 1898
Hattiesburg, MS 39401

Master

File Number: 2012-1292

File ID:	2012-1292	**Type:**	Regular Agenda Item	**Status:**	Agenda Ready
Version:	1	**Reference:**		**In Control:**	City Council
				File Created:	10/30/2012
Brief Title:	Acknowledge Receipt of two-bid purchase docket for period of September 25, 2012 through October 29, 2012			**Final Action:**	
				Minute Book Number:	MB2012-1/386

Title:

Acknowledge Receipt of two-bid purchase docket for period of September 25, 2012 through October 29, 2012 as provided for in Section 31-7-13(B) of the Mississippi Code of 1972.

Notes:

Sponsors:		**Enactment Date:**	
Attachments:	11-06-Two Quote Docket.pdf	**Enactment Number:**	
Contact:		**Meeting Date:**	11/06/2012
Drafter:		**Effective Date:**	

History of Legislative File

Version:	Acting Body:	Date:	Action:	Sent To:	Due Date:	Return Date:	Result:
1	City Council	11/06/2012					

Text of Legislative File 2012-1292

Title

Acknowledge Receipt of two-bid purchase docket for period of September 25, 2012 through October 29, 2012 as provided for in Section 31-7-13(B) of the Mississippi Code of 1972.

Summary

Acknowledge Receipt of two-bid purchase docket for period of September 25, 2012 through October 29, 2012

Mayor
Johnny L. DuPree, Ph.D.

Council - Ward 1	Council - Ward 2	Council - Ward 3	Council - Ward 4	Council - Ward 5
Kim Bradley	*Deborah Denard Delgado*	*Carter Carroll*	*Dave J. Ware, II*	*Henry Naylor*

MEMORANDUM

TO: Mayor and Council

FROM: Michael Pope, Purchasing Department

DATE: October 30, 2012

SUBJECT: Unadvertised Bid Docket Acknowledgment

Attached is the purchase docket for the period of September 25, 2012, through October 29, 2012 covering purchases requiring the obtaining of a minimum of two bids as defined in Section 31-7-13 (B) of the Mississippi Code.

This report is submitted for your review and acknowledgment on the minutes of the City Council. Should there be any questions, please do not hesitate to contact my office.

MAP

CITY OF HATTIESBURG UNADVERTISED BID PURCHASES
SEPTEMBER 25, 2012 - OCTOBER 29, 2012

SUCCESSFUL BID/ OTHER BID	BID RECEIVED	BID AWARDED	BID AMOUNT	PURCHASE ORDER	ITEM DESCRIPTION
SHERWIN-WILLIAMS FLOOR COVERING	09/25/12	09/25/12	8,946.94	127587	ENGINEERING UPSTAIRS FLOORING
ANDERSON RETAIL INC	09/25/12	09/25/12	9,382.04		
PLAY IT AGAIN SPORTS	09/27/12	09/27/12	1,432.68	127640	QUOTE FOR YOUTH FOOTBALL TSHIRTS. LIL TIGER
GEORGE'S SPORTING GOODS INC (LAUREL)	09/27/12	09/27/12	1,820.85		
PERFORMANCE RESCUE	10/12/12	10/12/12	17,500.00	128060	CRASH RESCUE EQUIPMENT
OKIE EXTRICATION	10/12/12	10/12/12	18,825.00		
PUCKETT MACHINERY COMPANY	10/12/12	10/12/12	36,612.00	128061	RENT/TRACKHOE CAT 320DL HES FOR PW DEPT TO
PUCKETT RENTS	10/12/12	10/12/12	43,855.00		
C D W GOVERNMENT	10/18/12	10/18/12	42,160.00	128183	COMPUTERS FOR HPD DETECTIVES & TRAFFIC COPS
RICOH CORP VOIDED	10/18/12	10/18/12	63,490.75		
B W I	10/19/12	10/19/12	18,337.50	128238	RYE GRASS SEED FOR ALL BALLFIELDS
AGRI-AFC LLC	10/19/12	10/19/12	18,412.50		
SMITH, JIM SERVICES	10/19/12	10/19/12	12,291.82	128239	C.E. ROY KITCHEN-ROOF TOP HVAC
UNIVERSAL SERVICES	10/19/12	10/19/12	13,500.00		
GILKEY ELECTRIC SUPPLY CO INC	10/19/12	10/19/12	2,095.00	128240	SO ELECTRICAL CORD #6 AWG WITH FOUR CONDUCT
HCP PUMPS AMERICA INC	10/19/12	10/19/12	2,155.00		
C D W GOVERNMENT	10/24/12	10/24/12	46,970.00	128363	COMPUTERS FOR HPD DETECTIVES & TRAFFIC COPS
RICOH CORP	10/24/12	10/24/12	57,425.00		
WARREN PAVING INC	10/26/12	10/26/12	10,900.00	128390	SURFACE CONTRACTORS MIX FOR VARIOUS LOCATIO
DUNN ROADBUILDERS LLC	10/26/12	10/26/12	13,272.00		

BILL TO:
CITY OF HATTIESBURG
ACCOUNTING DEPT
PO BOX 1898
HATTIESBURG, MS 39403-1898
FAX INVOICE TO: 601-584-4895

CITY OF HATTIESBURG
P U R C H A S E O R D E R
THE CITY IS NOT LIABLE FOR SALES TAX ID# 64-6000432

POINT OF CONTACT:

Page - 1
Date - 09/25/12

PO No. - 127587

Req No. - 1853

VENDOR MAILING:
SHERWIN-WILLIAMS FLOOR COVERING
6424 U S HWY 98
HATTIESBURG MS 39402-8437

ALLEN, LAMBIE (601) 5454640
MINUTE BOOK # PENDING
VENDOR # 00061353

SHIP TO :
CITY OF HATTIESBURG
ENGINEERING/PUBLIC SERVICES
212 WEST FRONT STREET-CENTENNIAL BLDG
HATTIESBURG MS 39401

PROCESSING CODE:

SEND METHOD 1 (601)2683003

PROJECT LINE: ENGINEERING UPSTAIRS FLOORING

Account #	Description	QTY	UM	UNIT COST	TOTAL COST
001203.6350	UPSTAIRS FLOORING VINYL PLANK: MATERIALS & INSTALLATION LAY OVER EXISTING FLOORING MOVE FURNITURE AND PULL UP & REPLACE 2 TOILETS TAKE OFF EXISTING SHOEMOLD CARPET & PAD: MATERIALS & INSTALLATION REMOVE EXISTING CARPET & PAD REPLACE WITH NEW CARPET & PAD	1.00	EA	8,946.9400	8,946.94

TOTAL CONTRACT AMOUNT NOT TO EXCEED 8,946.94

SUBMIT SEPARATE INVOICES FOR EACH ORDER. PREPAY SHIPPING CHARGES IF ANY AND ADD TO INVOICE.

THIS PO NUMBER MUST APPEAR ON ALL PACKAGES & INVOICES.

FOR CORRECTIONS TO VENDOR ADDRESS ABOVE, CONTACT ACCOUNTING (601) 545-4686.

EDDIE R. MYERS
CITY CLERK

43530

CITY OF HATTIESBURG
QUOTE REQUEST RESPONSE FORM

Page No. 1
Date - 9/12/12
Order Number . . 1853 00

SHERWIN-WILLIAMS FLOOR CO
6424 U S HWY 98
HATTIESBURG MS 39402-8437

Mail To. . . . . CITY OF HATTIESBURG
PURCHASING DIVISION
220 W FRONT ST.2ND FLOOR
PO BOX 1898
HATTIESBURG MS 39401

PRINTED NAME Steven Williamson

SIGNATURE _____ DATE 9-13-12

Phone Number . . 601 5454512

Shipping terms are F.O.B. destination, freight prepaid

PROJECT LINE: ENGINEERING UPSTAIRS FLOORING

ITEM DESCRIPTION	Request Date	QTY	UM	Unit Price	Extended Cost	Delivery Date	Expired Date
UPSTAIRS FLOORING VINYL PLANK: MATERIALS & INSTALLATION LAY OVER EXISTING VCT MOVE FURNITURE AND PULL UP & REPLACE 2 TOILETS TAKE OFF EXISTING SHOVELD CARPET & PAD: MATERIALS & INSTALLATION REMOVE EXISTING CARPET & PAD REPLACE WITH NEW CARPET	09/06/12	1.00	EA	7287.94	7659.00	9-21	9-24

TOTAL BID PRICE 8946.94

RECEIVED
SEP 25 2012

RECEIVED
SEP 25 2012
Verlina Lenderwood
AWARDED

APPROVED FOR PAYMENT
DATE 9/26/12
SIGNATURE [signature]

43530

CITY OF HATTIESBURG
QUOTE REQUEST RESPONSE FORM

Page No. 1
Date - 9/12/12
Order Number . . 1853 OQ

ANDERSON RETAIL INC
PO BOX 16055
HATTIESBURG MS 39404-6055

Mail To. . . . . CITY OF HATTIESBURG
PURCHASING DIVISION
220 W FRONT ST.2ND FLOOR
PO BOX 1898
HATTIESBURG MS 39401

PRINTED NAME Matt Dearman

Phone Number . . 601 5454532

SIGNATURE Matt Dearman DATE 9/14/12

Shipping terms are F.O.B. destination, freight prepaid

PROJECT LINE: ENGINEERING UPSTAIRS FLOORING

ITEM DESCRIPTION	Request Date	QTY	UM	Unit Price	Extended Cost	Delivery Date	Expired Date
UPSTAIRS FLOORING VINYL PLANK: MATERIALS & INSTALLATION LAY OVER EXISTING VCT MOVE FURNITURE AND PULL UP & REPLACE 2 TOILETS TAKE OFF EXISTING SHOEMOLD CARPET & PAD: MATERIALS & INSTALLATION REMOVE EXISTING CARPET & PAD REPLACE WITH NEW CARPET	09/06/12	1.00	EA	$9382.04	$9382.04	TBD	12/31/12

TOTAL BID PRICE $9382.04

RECEIVED
SEP 25 2012

RECEIVED
SEP 25 2012
AWARDED

BILL TO:
CITY OF HATTIESBURG
ACCOUNTING DEPT
PO BOX 1898
HATTIESBURG, MS 39403-1898
FAX INVOICE TO: 601-584-4895

CITY OF HATTIESBURG
P U R C H A S E O R D E R
THE CITY IS NOT LIABLE FOR SALES TAX ID# 64-6000432

POINT OF CONTACT:

Page - 1
Date - 09/27/12
PO No. - 127640
Req No. - 1862

VENDOR MAILING:
PLAY IT AGAIN SPORTS
ATTN JASON TOWNSEND
24 CROSS CREEK PKWY STE 88
HATTIESBURG MS 39402-4410

HOSKINS, MARYANN (601) 5454624
MINUTE BOOK # pending
VENDOR # 00081970

SHIP TO :
CITY OF HATTIESBURG
PURCHASING DIVISION
220 W FRONT ST.2ND FLOOR
PO BOX 1898
HATTIESBURG MS 39401

PROCESSING CODE:

PROJECT LINE: QUOTE FOR YOUTH FOOTBALL TSHIRTS. LIL TIGERS 2012.

SEND METHOD 1 (601)2688917

Account #	Description	QTY	UM	UNIT COST	TOTAL COST
002315.5510	TSHIRTS Size: Adult Lrg, Team name on front, HPR logo on sleeve and numbers 1-15 on back of T-Shirts. Different color T-Shirts for each Team.	7.00	EA	7.9600	55.72
002315.5510	TSHIRTS Size: Adult XL, Team name on front, HPR logo on sleeve Different color T-Shirts for each Team. Coaches Tshirts.	8.00	EA	6.9600	55.68
002315.5510	TSHIRTS Size: Adult XL, Team name on front, HPR logo on sleeve and numbers 1-15 on back of T-Shirts. Different color T-Shirts for each Team.	1.00	EA	7.9600	7.96
002315.5510	TSHIRTS Size: Youth Sm. Team name on front, HPR logo on sleeve Different color T-Shirts for each Team. # 1-15 on back of Tshirts.	30.00	EA	7.9600	238.80
002315.5510	TSHIRTS Size: Youth Med.Team name on front, HPR logo on sleeve Different color T-Shirts for each Team. # 1-15 on back of Tshirts.	52.00	EA	7.9600	413.92
002315.5510	TSHIRTS Size: Youth Lrg.Team name on front, HPR logo on sleeve Different color T-Shirts for each Team. # 1-15 on back of Tshirts.	44.00	EA	7.9600	350.24
002315.5510	TSHIRTS Size: Adult Sm. Team name on front, HPR logo on sleeve Different color T-Shirts for each Team. # 1-15 on back of TShirts.	12.00	EA	7.9600	95.52
002315.5510	TSHIRTS Size: Adult Med Team name on front, HPR logo on sleeve Different color	6.00	EA	7.9600	47.76

BILL TO:
CITY OF HATTIESBURG
ACCOUNTING DEPT
PO BOX 1898
HATTIESBURG, MS 39403-1898
FAX INVOICE TO: 601-584-4895

CITY OF HATTIESBURG
P U R C H A S E O R D E R
THE CITY IS NOT LIABLE FOR SALES TAX ID# 64-6000432

POINT OF CONTACT:

Page - 2
Date - 09/27/12
PO No. - 127640
Req No. - 1862

VENDOR MAILING:
PLAY IT AGAIN SPORTS
ATTN JASON TOWNSEND
24 CROSS CREEK PKWY STE 88
HATTIESBURG MS 39402-4410

HOSKINS, MARYANN (601) 5454624

VENDOR # 00081970

SHIP TO :
CITY OF HATTIESBURG
PURCHASING DIVISION
220 W FRONT ST.2ND FLOOR
PO BOX 1898
HATTIESBURG MS 39401

PROCESSING CODE:

SEND METHOD 1 (601)2688917

PROJECT LINE: QUOTE FOR YOUTH FOOTBALL TSHIRTS. LIL TIGERS 2012.

Account #	Description	QTY	UM	UNIT COST	TOTAL COST
	T-Shirts for each Team. # 1-15 on back of Tshirts.				
002315.5510	TSHIRTS Size: Adult Lrg.Team name on front, HPR logo on sleeve Different color T-Shirts for each Team. # 1-15.	7.00	EA	7.9600	55.72
002315.5510	TSHIRTS Size: Adult 2X, Team name on front, HPR logo on sleeve Different color T-Shrits for each Team. Coaches Tshirts	12.00	EA	6.9600	83.52
002315.5510	TSHIRTS Size: Adult 3X, Team name on front, HPR logo on sleeve Different color T-Shirts for each Team. Coaches Tshirts Size: Adult 3X, Team name on front, HPR logo on sleeve	2.00	EA	6.9600	13.92
002315.5510	TSHIRTS Size: Adult 4X, Team name on front, HPR logo on sleeve Different color T-Shirts for each Team. Coaches Tshirts	2.00	EA	6.9600	13.92

TOTAL CONTRACT AMOUNT NOT TO EXCEED 1,432.68

SUBMIT SEPARATE INVOICES FOR EACH ORDER. PREPAY SHIPPING CHARGES IF ANY AND ADD TO INVOICE.

THIS PO NUMBER MUST APPEAR ON ALL PACKAGES & INVOICES.

FOR CORRECTIONS TO VENDOR ADDRESS ABOVE, CONTACT ACCOUNTING (601) 545-4686.

EDDIE R. MYERS
CITY CLERK

43530

CITY OF HATTIESBURG
QUOTE REQUEST RESPONSE FORM

Page No. 1
Date 9/25/12
Order Number . . 1662 CQ

PLAY IT AGAIN SPORTS
ATTN JASON TOWNSEND
26 CROSS CREEK PKWY STE 8
HATTIESBURG MS 39402-4410

Mail To. . . . . CITY OF HATTIESBURG
PURCHASING DIVISION
220 W FRONT ST.2ND FLOOR
PO BOX 1898
HATTIESBURG MS 39403

Phone Number . . 601 5454512

PRINTED NAME Play It Again

SIGNATURE _____ DATE 9/26/2012

Shipping terms are F.O.B. destination, freight prepaid

PROJECT LINE: QUOTE FOR YOUTH FOOTBALL TSHIRTS. LIL TIGERS 2012.

ITEM DESCRIPTION	Request Date	QTY	UM	Unit Price	Extended Cost	Delivery Date	Expired Date
TSHIRTS Size: Adult Lrg. Team name on front. HPR logo on sleeve and numbers 1-15 on back of T-Shirts. Different color T-shirts for each Team.	09/24/12	7.00	EA	7.96	55.22	ASAP	Nov 30th
TSHIRTS Size: Adult XL, Team name on front, HPR logo on sleeve Different color T-Shirts for each Team. Coaches Tshirts.	09/24/12	8.00	EA	6.96	55.68	"	Nov 30th
TSHIRTS Size: Adult XL, Team name on front, HPR logo on sleeve and numbers 1-15 on back of T-Shirts. Different color T-Shirts for each Team.	09/24/12	1.00	EA	7.96	7.96	"	"
TSHIRTS Size: Youth Sm. Team name on front, HPR logo on sleeve Different color T-Shirts for each Team. # 1-15 on back of Tshirts.	09/24/12	30.00	EA	7.96	238.80	"	"
TSHIRTS Size: Youth Med.Team name on front, HPR logo on sleeve Different color T-Shirts for each Team. # 1-15 on back of Tshirts.	09/24/12	52.00	EA	7.96	413.92	"	"

Approved 9/27/12
C Myers

03537

CITY OF HATTIESBURG
QUOTE REQUEST RESPONSE FORM

Page No. 2
Date 9/25/12
Order Number 1062 00

PROJECT LINE: QUOTE FOR YOUTH FOOTBALL TSHIRTS. LIL TIGERS 2012.

ITEM DESCRIPTION	Request Date	QTY	UM	Unit Price	Extended Cost	Delivery Date	Expired Date
TSHIRTS Size: Youth Lrg.Team name on front, HPR logo on sleeve Different color T-Shirts for each Team. # 1-15 on back of Tshirts.	09/24/12	44.00	EA	7.96	350.24	"	Nov 30th
TSHIRTS Size: Adult Sm. Team name on front, HPR logo on sleeve Different color T-Shirts for each Team. # 1-15 on back of TShirts.	09/24/12	12.00	EA	7.96	95.52	"	
TSHIRTS Size: Adult Med Team name on front, HPR logo on sleeve Different color T-Shirts for each Team. # 1-15 on back of Tshirts.	09/24/12	6.00	EA	7.96	47.76	"	
TSHIRTS Size: Adult Lrg.Team name on front, HPR logo on sleeve Different color T-Shirts for each Team. # 1-15.	09/24/12	7.00	EA	7.96	55.72	"	
TSHIRTS Size: Adult 2X, Team name on front, HPR logo on sleeve Different color T-Shirts for each Team. Coaches Tshirts.	09/24/12	12.00	EA	6.96	83.52	"	
TSHIRTS Size: Adult 3X, Team name on front, HPR logo on sleeve Different color T-Shirts for each Team. Coaches Tshirts Size: Adult 3X, Team name on front, HPR logo on sleeve	09/24/12	2.00	EA	6.96	13.92	"	
TSHIRTS Size: Adult 4X, Team name on front, HPR logo on sleeve Different color T-Shirts for each Team. Coaches Tshirts	09/24/12	2.00	EA	6.96	13.92	"	

43530

CITY OF HATTIESBURG
QUOTE REQUEST RESPONSE FORM

Page No. 3
Date 9/25/12
Order Number 1862 00

PROJECT LINE: QUOTE FOR YOUTH FOOTBALL TSHIRTS. LIL TIGERS 2012.

ITEM DESCRIPTION	Request Date	QTY	UM	Unit Price	Extended Cost	Delivery Date	Expired Date

TOTAL BID PRICE 1432 68/100

PLAY IT AGAIN SPORT

43530

CITY OF HATTIESBURG
QUOTE REQUEST RESPONSE FORM

Page No. 1
Date - 9/25/12
Order Number . . 1862 QQ

GEORGE'S SPORTING GOODS I
301 N 16TH AVE
LAUREL MS 39440-3848

Mail To. . . . . CITY OF HATTIESBURG
PURCHASING DIVISION
220 W FRONT ST.2ND FLOOR
PO BOX 1898
HATTIESBURG MS 39401

PRINTED NAME Jay Purvis

SIGNATURE Jay Purvis DATE 9/25/12

Phone Number . . 601 5454512

Shipping terms are F.O.B. destination, freight prepaid

PROJECT LINE: QUOTE FOR YOUTH FOOTBALL TSHIRTS. LIL TIGERS 2012.

ITEM DESCRIPTION	Request Date	QTY	UM	Unit Price	Extended Cost	Delivery Date	Expired Date
TSHIRTS Size: Adult Lrg. Team name on front, HPR logo on sleeve and numbers 1-15 on back of T-Shirts. Different color T-Shirts for each Team.	09/24/12	7.00	EA	9.95	69.65		10/26
TSHIRTS Size: Adult XL. Team name on front, HPR logo on sleeve Different color T-Shirts for each Team. Coaches Tshirts.	09/24/12	8.00	EA	9.95	79.60		
TSHIRTS Size: Adult XL. Team name on front, HPR logo on sleeve and numbers 1-15 on back of T-Shirts. Different color T-Shirts for each Team.	09/24/12	1.00	EA	9.95	9.95		
TSHIRTS Size: Youth Sm. Team name on front, HPR logo on sleeve Different color T-Shirts for each Team. # 1-15 on back of Tshirts.	09/24/12	30.00	EA	9.95	298.50		
TSHIRTS Size: Youth Med. Team name on front, HPR logo on sleeve Different color T-Shirts for each Team. # 1-15 on back of Tshirts.	09/24/12	52.00	EA	9.95	517.40		

JP

43530

CITY OF HATTIESBURG
QUOTE REQUEST RESPONSE FORM

Page No. 2
Date - 9/25/12
Order Number . . 1862 OQ

PROJECT LINE: QUOTE FOR YOUTH FOOTBALL TSHIRTS. LIL TIGERS 2012.

ITEM DESCRIPTION	Request Date	QTY	UM	Unit Price	Extended Cost	Delivery Date	Expired Date
TSHIRTS Size: Youth Lrg.Team name on front, HPR logo on sleeve Different color T-Shirts for each Team. # 1-15 on back of Tshirts.	09/24/12	44.00	EA	9.95	437.80		10/26
TSHIRTS Size: Adult Sm. Team name on front, HPR logo on sleeve Different color T-Shirts for each Team. # 1-15 on back of TShirts.	09/24/12	12.00	EA	9.95	119.40		
TSHIRTS Size: Adult Med Team name on front, HPR logo on sleeve Different color T-Shirts for each Team. # 1-15 on back of Tshirts.	09/24/12	6.00	EA	9.95	59.70		
TSHIRTS Size: Adult Lrg.Team name on front, HPR logo on sleeve Different color T-Shirts for each Team. # 1-15.	09/24/12	7.00	EA	9.95	69.65		
TSHIRTS Size: Adult 2X, Team name on front, HPR logo on sleeve Different color T-Shrits for each Team. Coaches Tshirts.	09/24/12	12.00	EA	9.95	119.40		
TSHIRTS Size: Adult 3X, Team name on front, HPR logo on sleeve Different color T-Shirts for each Team. Coaches Tshirts Size: Adult 3X, Team name on front, HPR logo on sleeve	09/24/12	2.00	EA	9.95	19.90		
TSHIRTS Size: Adult 4X, Team name on front, HPR logo on sleeve Different color T-Shirts for each Team. Coaches Tshirts	09/24/12	2.00	EA	9.95	19.90		

43530

CITY OF HATTIESBURG
QUOTE REQUEST RESPONSE FORM

Page No. 3
Date - 9/25/12
Order Number . . 1862 OQ

PROJECT LINE: QUOTE FOR YOUTH FOOTBALL TSHIRTS. LIL TIGERS 2012.

ITEM DESCRIPTION	Request Date	QTY	UM	Unit Price	Extended Cost	Delivery Date	Expired Date

TOTAL BID PRICE $1820.85

BILL TO:
CITY OF HATTIESBURG
ACCOUNTING DEPT
PO BOX 1898
HATTIESBURG, MS 39403-1898
FAX INVOICE TO: 601-584-4895

CITY OF HATTIESBURG
P U R C H A S E O R D E R
THE CITY IS NOT LIABLE FOR SALES TAX ID# 64-6000432

POINT OF CONTACT:

Page - 1
Date - 10/12/12
PO No. - 128060
Req No. - 1865

VENDOR MAILING:
MARK RUSSELL
PERFORMANCE RESCUE
96 N BRYANT RD
SUMRALL MS 39482-4379

DANIELS, ROBERT (601) 5823311
MINUTE BOOK # PENDING
VENDOR # 00089442

SHIP TO :
CITY OF HATTIESBURG
FIRE DEPT-STATION #1
810 N MAIN STREET
HATTIESBURG MS 39401

PROCESSING CODE:

PROJECT LINE: CRASH RESCUE EQUIPMENT

SEND METHOD 1 (601)7580350

Account #	Description	QTY	UM	UNIT COST	TOTAL COST
005160.7315	ATT-6.5 SIMO POWER UNIT W/ ACCELERATOR SHIPPING AND TRAINING INCLUDED ON ALL ITEMS	1.00	EA	5,385.0000	5,385.00
005160.7315	SLC-29, 7 3/8 INCH HEAVY DUTY C-CUTTER	1.00	EA	4,250.0000	4,250.00
005160.7315	A-100-28, 28 INCH HEAVY DUTY SPREADER	1.00	EA	4,865.0000	4,865.00
005160.7315	R-40, 40 INCH HEAVY DUTY RAM	1.00	EA	1,695.0000	1,695.00
005160.7315	EXTH-30, 30 FT. EXTENSION HOSE	2.00	EA	652.5000	1,305.00

CITY OF HATTIESBURG MISSISSIPPI 1884

TOTAL CONTRACT AMOUNT NOT TO EXCEED 17,500.00

SUBMIT SEPARATE INVOICES FOR EACH ORDER. PREPAY SHIPPING CHARGES IF ANY AND ADD TO INVOICE.

THIS PO NUMBER MUST APPEAR ON ALL PACKAGES & INVOICES.

FOR CORRECTIONS TO VENDOR ADDRESS ABOVE, CONTACT ACCOUNTING (601) 545-4686.

EDDIE R. MYERS
CITY CLERK

43530

CITY OF HATTIESBURG
QUOTE REQUEST RESPONSE FORM

Page No. 1
Date 10/09/12
Order Number . . 1865 OQ

MARK RUSSELL
PERFORMANCE RESCUE
96 N BRYANT RD
SUMRALL MS 39482-4379

Mail To. . . . . CITY OF HATTIESBURG
PURCHASING DIVISION
220 N FRONT ST.2ND FLOOR
PO BOX 1898
HATTIESBURG MS 39401

PRINTED NAME Mark Russell / Performance Rescue Phone Number . . 601 5454512

SIGNATURE Mark Russell DATE 10/12/12 Shipping terms are F.O.B. destination, freight prepaid

PROJECT LINE: CRASH RESCUE EQUIPMENT

ITEM DESCRIPTION	Request Date	QTY	UM	Unit Price	Extended Cost	Delivery Date	Expired Date
ATT-6.5 SIMO POWER UNIT W/ ACCELERATOR SHIPPING AND TRAINING INCLUDED ON ALL ITEMS	10/03/12	1.00	EA	$5,385.00	$5,385.00	11/15/12	11/30/12
SLC-29, 7 3/8 INCH HEAVY DUTY C-CUTTER	10/03/12	1.00	EA	$4,250.00	$4,250.00	11/15/12	11/30/12
A-100-28, 28 INCH HEAVY DUTY SPREADER	10/03/12	1.00	EA	$4,865.00	$4,865.00	11/15/12	11/30/12
R-40, 40 INCH HEAVY DUTY RAM	10/03/12	1.00	EA	$1,695.00	$1,695.00	11/15/12	11/30/12
EXTH-30, 30 FT. EXTENSION HOSE	10/03/12	2.00	EA	$1,305.00	$1,305.00	11/15/12	11/30/12*

$653.50
Corrected on phone

TOTAL BID PRICE $17,500.00

Lowest & Best

Robert Davis

RECEIVED
OCT 12 2012
Verlena Underwood
AWARDED

* Delivery and Expire Date are estimates depending on P.O. date

43530

CITY OF HATTIESBURG
QUOTE REQUEST RESPONSE FORM

Page No. 1
Date - 10/09/12
Order Number . . 1865 OQ

OKIE EXTRICATION
808 SOUTHWEST 26TH ST
EL RENO OK 73036

Mail To. . . . . CITY OF HATTIESBURG
PURCHASING DIVISION
220 W FRONT ST.2ND FLOOR
PO BOX 1898
HATTIESBURG MS 39401

PRINTED NAME Dave Nichols

Phone Number . . 601 5454512

SIGNATURE Dave Nichols DATE 10/12/12

Shipping terms are F.O.B. destination, freight prepaid

PROJECT LINE: CRASH RESCUE EQUIPMENT

ITEM DESCRIPTION	Request Date	QTY	UM	Unit Price	Extended Cost	Delivery Date	Expired Date
ATT-6.5 SIMO POWER UNIT W/ ACCELERATOR SHIPPING AND TRAINING INCLUDED ON ALL ITEMS	10/03/12	1.00	EA	~~$5525~~	~~$5525~~	~~11/30~~	~~12/30/12~~
SLC-29, 7 3/8 INCH HEAVY DUTY C-CUTTER	10/03/12	1.00	EA	4600	4600	"	"
A-100-28, 28 INCH HEAVY DUTY SPREADER	10/03/12	1.00	EA	5300	5300	"	"
R-40, 40 INCH HEAVY DUTY RAM	10/03/12	1.00	EA	2000	2000	"	
EXTH-30, 30 FT. EXTENSION HOSE	10/03/12	2.00	EA	700	1400	"	

TOTAL BID PRICE 18,825.00

RECEIVED
OCT 12 2012

Oct 12 12 08:58a David W. Nichols 405-262-9888 P.1

BILL TO:
CITY OF HATTIESBURG
ACCOUNTING DEPT
PO BOX 1898
HATTIESBURG, MS 39403-1898
FAX INVOICE TO: 601-584-4895

CITY OF HATTIESBURG
P U R C H A S E O R D E R
THE CITY IS NOT LIABLE FOR SALES TAX ID# 64-6000432

POINT OF CONTACT:

Page - 1
Date - 10/12/12
PO No. - 128061
Req No. - 1868

VENDOR MAILING:
PUCKETT MACHINERY COMPANY
PO BOX 1568
HATTIESBURG MS 39403-1568

PERKINS, SANDE NOEL (601) 5454641
MINUTE BOOK # PENDING
VENDOR # 90002017

SHIP TO :
CITY OF HATTIESBURG
PUBLIC WORKS DEPT
1202 JAMES STREET
HATTIESBURG MS 39401

PROCESSING CODE:

PROJECT LINE: RENT/TRACKHOE CAT 320DL HES FOR PW DEPT TO INCLUDE INSURANCE

SEND METHOD 1 (601)2648104

Account #	Description	QTY	UM	UNIT COST	TOTAL COST
072201.6420	RENT TRACKHOE/INS. RENT TRACKHOE FOR THE PUBLIC WORKS DEPARTMENT WITH INSURANCE INCLUDED IN THE PACKAGE. CAT 320DL HES	1.00	EA	36,612.0000	36,612.00

TOTAL CONTRACT AMOUNT NOT TO EXCEED 36,612.00

SUBMIT SEPARATE INVOICES FOR EACH ORDER. PREPAY SHIPPING CHARGES IF ANY AND ADD TO INVOICE.

THIS PO NUMBER MUST APPEAR ON ALL PACKAGES & INVOICES.

FOR CORRECTIONS TO VENDOR ADDRESS ABOVE, CONTACT ACCOUNTING (601) 545-4686.

EDDIE R. MYERS
CITY CLERK

43530

CITY OF HATTIESBURG
QUOTE REQUEST RESPONSE FORM

Page No. 1
Date 10/09/12
Order Number . . 1868 00

PUCKETT MACHINERY COMPANY
PO BOX 1568
HATTIESBURG MS 39403-1568

Mail To. . . . . CITY OF HATTIESBURG
PURCHASING DIVISION
220 W ERGHT ST,2ND FLOOR
PO BOX 1898
HATTIESBURG MS 39401

Phone Number . . 601 5454512

PRINTED NAME Kenneth Miller

SIGNATURE Kenneth Miller DATE 10-10-12

Shipping terms are F.O.B. destination, freight prepaid

PROJECT LINE: RENT/TRACKHOE CAT 320DL HBS FOR PW DEPT TO INCLUDE INSURANCE

ITEM DESCRIPTION	Request Date	QTY	UM	Unit Price	Extended Cost	Delivery Date	Expired Date
RENT TRACKHOE/INS. RENT TRACKHOE FOR THE PUBLIC WORKS DEPARTMENT WITH INSURANCE INCLUDED IN THE PACKAGE. CAT 320DL HBS	10/09/12	1.00	EA	36,612.00	36,612.00	10-11-12	April 2013

6 MONTH
W/ INSURANCE -

TOTAL BID PRICE $36,612.00

RECEIVED
OCT 12 2012
Verlina Underwood
AWARDED

43530

CITY OF HATTIESBURG
QUOTE REQUEST RESPONSE FORM

Page No. 1
Date - 10/09/12
Order Number . . 1868 OQ

PUCKETT RENTS
7128 US HIGHWAY 49 N
HATTIESBURG MS 39402-9374

Mail To. . . . . CITY OF HATTIESBURG
PURCHASING DIVISION
220 W FRONT ST.2ND FLOOR
PO BOX 1898
HATTIESBURG MS 39401

PRINTED NAME J. Roger Brown

SIGNATURE [signature] DATE 10/10/12

Phone Number . . 601 5454512

Shipping terms are F.O.B. destination, freight prepaid

PROJECT LINE: RENT/TRACKHOE CAT 320DL HES FOR FW DEPT TO INCLUDE INSURANCE

ITEM DESCRIPTION	Request Date	QTY	UM	Unit Price	Extended Cost	Delivery Date	Expired Date
RENT TRACKHOE/INS. RENT TRACKHOE FOR THE PUBLIC WORKS DEPARTMENT WITH INSURANCE INCLUDED IN THE PACKAGE. CAT 320DL HES	10/09/12	1.00	EA	$43855.00	$43,855.00	10/10/12	4/10/13

TOTAL BID PRICE $43855.00

RECEIVED
OCT 12 2012

43530

CITY OF HATTIESBURG
QUOTE REQUEST RESPONSE FORM

Page No. 1
Date - 10/09/12
Order Number . . 1868 OQ

VOLVO RENTS
PO BOX 16624
HATTIESBURG MS 39404-6624

Mail To. . . . . CITY OF HATTIESBURG
PURCHASING DIVISION
220 W FRONT ST.2ND FLOOR
PO BOX 1898
HATTIESBURG MS 39401

PRINTED NAME Dan Parker

Phone Number . . 601- 5454512

SIGNATURE [signature] DATE 10-10-12 Shipping terms are F.O.B. destination, freight prepaid

PROJECT LINE: RENT/TRACKHOE CAT 320DL HBS FOR PW DEPT TO INCLUDE INSURANCE

ITEM DESCRIPTION	Request Date	QTY	UM	Unit Price	Extended Cost	Delivery Date	Expired Date
RENT TRACKHOE/INS. RENT TRACKHOE FOR THE PUBLIC WORKS DEPARTMENT WITH INSURANCE INCLUDED IN THE PACKAGE. CAT 320DL HES	10/09/12	1.00	EA	$5,928.00/month			

EC210 is the Volvo equivalent

TOTAL BID PRICE $35,568.00

Does not meet

BILL TO:
CITY OF HATTIESBURG
ACCOUNTING DEPT
PO BOX 1898
HATTIESBURG, MS 39403-1898
FAX INVOICE TO: 601-584-4895

CITY OF HATTIESBURG
P U R C H A S E O R D E R
THE CITY IS NOT LIABLE FOR SALES TAX ID# 64-6000432

POINT OF CONTACT:

Page - 1
Date - 10/18/12

PO No. - 128183

Req No. - 1867

VENDOR MAILING:
C D W GOVERNMENT
120 S RIVERSIDE
CHICAGO IL 60606-3913

SANFORD, ANGELA (601) 5454560
MINUTE BOOK # PENDING
VENDOR # 90078126

SHIP TO :
CITY OF HATTIESBURG
INFORMATION TECHNOLOGY DIVISION
200 FORREST STREET - 1ST FLOOR
HATTIESBURG MS 39401

PROCESSING CODE:

SEND METHOD 0 ( )

PROJECT LINE: COMPUTERS FOR HPD DETECTIVES & TRAFFIC COPS

Account #	Description	QTY	UM	UNIT COST	TOTAL COST
001091.7327	MOTION COMPUTERS MOTION F5T I5-3317U 64GB 4GB MFG#: LL423422834352 INTERGRATED BAR CODE SCANNER, CAMERA REAR & FRONT, GPS RFID $50.00 WILL BE DEDUCTED FOR EVERY DAY PAST PROMISED DELIVERY DATE.	17.00	EA	2,480.0000	42,160.00

VOIDED

TOTAL CONTRACT AMOUNT NOT TO EXCEED 42,160.00

SUBMIT SEPARATE INVOICES FOR EACH ORDER. PREPAY SHIPPING CHARGES IF ANY AND ADD TO INVOICE.

THIS PO NUMBER MUST APPEAR ON ALL PACKAGES & INVOICES.

FOR CORRECTIONS TO VENDOR ADDRESS ABOVE, CONTACT ACCOUNTING (601) 545-4686.

EDDIE R. MYERS
CITY CLERK

43530

CITY OF HATTIESBURG
QUOTE REQUEST RESPONSE FORM

Page No. 1
Date - 10/10/12
Order Number . . 1867 DQ

C D W GOVERNMENT
120 S RIVERSIDE
CHICAGO IL 60606-3913

Mail To. . . . . CITY OF HATTIESBURG
PURCHASING DIVISION
220 W FRONT ST.2ND FLOOR
PO BOX 1898
HATTIESBURG MS 39401

PRINTED NAME Jordan M. Kols

SIGNATURE [signature] DATE 10/10/12

Phone Number . . 601 5454512

Shipping terms are F.O.B. destination, freight prepaid

PROJECT LINE: COMPUTERS FOR HPD DETECTIVES & TRAFFIC COPS

ITEM DESCRIPTION	Request Date	QTY	UM	Unit Price	Extended Cost	Delivery Date	Expired Date
MOTION COMPUTERS MOTION EST I5-3317U 64GB 4GB MFG#: LL423422834352 INTERGRATED BAR CODE SCANNER, CAMERA REAR & FRONT, GPS RFID $50.00 WILL BE DEDUCTED FOR EVERY DAY PAST PROMISED DELIVERY DATE.	10/09/12	17.00	EA	2480.00	42,160.00	*	11/10/12

*- Delivery will be 30-45 days after order is placed.

TOTAL BID PRICE 42,160.00

Angie Lafuel

RECEIVED
OCT 18 2012
Marlina Underwood
AWARDED

CITY OF HATTIESBURG
QUOTE REQUEST RESPONSE FORM

Page No. 1
Date 10/16/12
Order Number . . 1867 OQ

RICOH CORP
#5 DEDRICK PL
WEST CALDWELL NJ 07006-63

Mail To. . . . . CITY OF HATTIESBURG
PURCHASING DIVISION
220 W FRONT ST.2ND FLOOR
PO BOX 1898
HATTIESBURG MS 39401

PRINTED NAME Samer N'Ser

Phone Number . . 601 5454512

SIGNATURE Samer N'Ser DATE 10/17/2012

Shipping terms are F.O.B. destination, freight prepaid

PROJECT LINE: COMPUTERS FOR HPD DETECTIVES & TRAFFIC COPS

ITEM DESCRIPTION	Request Date	QTY	UM	Unit Price	Extended Cost	Delivery Date	Expired Date
MOTION COMPUTERS MOTION F5T I5-33170 64GB 4GB MFG#: LL423422834352 INTERGRATED BAR CODE SCANNER, CAMERA REAR & FRONT, GPS RFID $50.00 WILL BE DEDUCTED FOR EVERY DAY PAST PROMISED DELIVERY DATE.	10/09/12	17.00	EA	$3,734.75	$63,490.75	21 days after PO	11/30/12

TOTAL BID PRICE $63,490.75

RECEIVED
OCT 18 2012

BILL TO:
CITY OF HATTIESBURG
ACCOUNTING DEPT
PO BOX 1898
HATTIESBURG, MS 39403-1898
FAX INVOICE TO: 601-584-4895

CITY OF HATTIESBURG
P U R C H A S E O R D E R
THE CITY IS NOT LIABLE FOR SALES TAX ID# 64-6000432

POINT OF CONTACT:

Page - 1
Date - 10/19/12

PO No. - 128238

Req No. - 1869

VENDOR MAILING:
B W I - JACKSON
PO BOX 1175
CLINTON MS 39060-1175

MURPHY, NATHALIE (601) 5454667
MINUTE BOOK # PENDING
VENDOR # 90058234

SHIP TO :
CITY OF HATTIESBURG
GROUNDS MAINTENANCE
800 ARLEDGE STREET
HATTIESBURG MS 39401

PROCESSING CODE:

SEND METHOD 1 (601)9228634

PROJECT LINE: RYE GRASS SEED FOR ALL BALLFIELDS

Account #	Description	QTY	UM	UNIT COST	TOTAL COST
002300.5440	CHAMPION GQ PERENN-IAL RYE GRASS SEED OR APPROVED EQUIAL	285.00	BC	52.5000	14,962.50
002300.5440	GULF ANNUAL RYE GRASS SEED OR APPROVED EQUAL	150.00	EA	22.5000	3,375.00

CITY OF HATTIESBURG MISSISSIPPI 1884

TOTAL CONTRACT AMOUNT NOT TO EXCEED 18,337.50

SUBMIT SEPARATE INVOICES FOR EACH ORDER. PREPAY SHIPPING CHARGES IF ANY AND ADD TO INVOICE.

THIS PO NUMBER MUST APPEAR ON ALL PACKAGES & INVOICES.

FOR CORRECTIONS TO VENDOR ADDRESS ABOVE, CONTACT ACCOUNTING (601) 545-4686.

EDDIE R. MYERS
CITY CLERK

43530

CITY OF HATTIESBURG
QUOTE REQUEST RESPONSE FORM

Page No. 1
Date 10/12/12
Order Number . . 1869 QQ

B H I - JACKSON
PO BOX 1175
CLINTON MS 39060-1175

Mail To. . . . CITY OF HATTIESBURG
PURCHASING DIVISION
220 N FRONT ST.2ND FLOOR
PO BOX 1898
HATTIESBURG MS 39401

Phone Number . . 601 5456512

PRINTED NAME Rusty Anderson

SIGNATURE [signature] DATE 10/18/12

Shipping terms are F.O.B. destination, freight prepaid

PROJECT LINE: RYE GRASS SEED FOR ALL BALLFIELDS

ITEM DESCRIPTION	Request Date	QTY	UM	Unit Price	Extended Cost	Delivery Date	Expires Date
CHAMPION GQ PERENNIAL RYE GRASS SEED OR APPROVED EQUAL Futura 2000	10/11/12	285.00	BG	~~[illegible]~~ 52.50	~~[illegible]~~ 14962.50		
GULF ANNUAL RYE GRASS SEED OR APPROVED EQUAL	10/11/12	150.00	EA	22.50	3375.00		

TOTAL BID PRICE 18337.50

RECEIVED
OCT 19 2012
Verlena Underwood
AWARDED

10-19-12

42530

CITY OF HATTIESBURG
QUOTE REQUEST RESPONSE FORM

Page No. 1
Date - 10/12/12
Order Number . . 1869 00

AGRI-AFC LLC
203 WISTERIA DR
HATTIESBURG MS 39401-7839

Mail To. . . . . CITY OF HATTIESBURG
PURCHASING DIVISION
220 W FRONT ST.2ND FLOOR
PO BOX 1838
HATTIESBURG MS 39401

PRINTED NAME BRYAN A. VOWELL W/ DREW ROCHELLE

Phone Number . . 601 5454512

SIGNATURE Bryan A. Vowell DATE 10-12-12

Shipping terms are F.O.B. destination, freight prepaid

PROJECT LINE: RYE GRASS SEED FOR ALL BALLFIELDS

ITEM DESCRIPTION	Request Date	QTY	UM	Unit Price	Extended Cost	Delivery Date	Expired Date
CHAMPION GO PERENNIAL RYE GRASS SEED OR APPROVED EQUAL	10/11/12	285.00	BG	52.50	$14,962.50	CALL	11-12-12
GULF ANNUAL RYE GRASS SEED OR APPROVED EQUAL	10/11/12	150.00	EA	23.00	$ 3450.00	CALL	11-12-12

TOTAL BID PRICE $18,412.50

RECEIVED
OCT 19 2012

BILL TO:
CITY OF HATTIESBURG
ACCOUNTING DEPT
PO BOX 1898
HATTIESBURG, MS 39403-1898
FAX INVOICE TO: 601-584-4895

CITY OF HATTIESBURG
P U R C H A S E O R D E R
THE CITY IS NOT LIABLE FOR SALES TAX ID# 64-6000432

POINT OF CONTACT:

Page - 1
Date - 10/19/12

PO No. - 128239

Req No. - 1870

VENDOR MAILING:
JIM SMITH SERVICES
315 E THIRD ST
HATTIESBURG MS 39401-2009

JONES, ANN (601) 5454661

VENDOR # 00017549

SHIP TO :
CITY OF HATTIESBURG
C.E. ROY COMMUNITY CENTER
300 EAST 5TH STREET
HATTIESBURG MS 39401

PROCESSING CODE:

SEND METHOD 0 ( )

PROJECT LINE: C.E. ROY KITCHEN-ROOF TOP HVAC

Account #	Description	QTY	UM	UNIT COST	TOTAL COST
077650.6380	VENDOR SHALL Remove existing 10 ton roof top HVAC unit and dispose. Furnish (1) new 10 ton Carrier Roof-top natural gas package unit, Model #48TCDD12A285-0AA0, NEW ROOF CURB ADAPTER#LCA120 REPLACE THE GAS LINE, REPLACE ELECTRICAL SERVICE TO UNIT, REPLACE THERMOSTAT #33CSCNACHP-01, AND START UP UNIT FOR A COMPLETE INSTALLATION JOB Vendor shall furnish all labor, material and equipment	1.00	EA	12,291.8200	12,291.82

CITY OF HATTIESBURG MISSISSIPPI 1884

TOTAL CONTRACT AMOUNT NOT TO EXCEED 12,291.82

SUBMIT SEPARATE INVOICES FOR EACH ORDER. PREPAY SHIPPING CHARGES IF ANY AND ADD TO INVOICE.

THIS PO NUMBER MUST APPEAR ON ALL PACKAGES & INVOICES.

FOR CORRECTIONS TO VENDOR ADDRESS ABOVE, CONTACT ACCOUNTING (601) 545-4686.

EDDIE R. MYERS
CITY CLERK

43530

CITY OF HATTIESBURG
QUOTE REQUEST RESPONSE FORM

Page No. 1
Date - 10/12/12
Order Number . . 1870 CQ

JIM SMITH SERVICES
315 E THIRD ST
HATTIESBURG MS 39401-2009

Mail To. . . . . CITY OF HATTIESBURG
PURCHASING DIVISION
220 W FRONT ST.2ND FLOOR
PO BOX 1898
HATTIESBURG MS 39401

PRINTED NAME Neal Griffis

SIGNATURE [signature] DATE 10/15/12

Phone Number . . 601 5454512

Shipping terms are F.O.B. destination. Freight prepaid

PROJECT LINE: C.B. ROY KITCHEN-ROOF TOP HVAC

ITEM DESCRIPTION	Request Date	QTY	UM	Unit Price	Extended Cost	Delivery Date	Expired Date
VENDOR SHALL Remove existing 10 ton roof top HVAC unit and dispose. Furnish (1) new 10 ton Carrier Roof-top natural gas package unit, Model #48TCDD12A2S5-0AA0, NEW ROOF CURB ADAPTER#LCA120 REPLACE THE GAS LINE, REPLACE ELECTRICAL SERVICE TO UNIT, REPLACE THERMOSTAT #33CSCHACHP-01, AND START UP UNIT FOR A COMPLETE INSTALLATION JOB Vendor shall furnish all labor, material and equipment	10/11/12	1.00	EA	12,291.82	12,291.82	10/18/12	11/15/12

TOTAL BID PRICE $12,291.82

RECEIVED
OCT 19 2012
Verlena Underwood
AWARDED

10-19-12

43530

CITY OF HATTIESBURG
QUOTE REQUEST RESPONSE FORM

Page No. 1
Date - 10/12/12
Order Number . . 1870 OQ

UNIVERSAL SERVICES
708 MAIN ST
PO BOX 39
LEAKESVILLE MS 39451-0039

Mail To. . . . . CITY OF HATTIESBURG
PURCHASING DIVISION
220 W FRONT ST.2ND FLOOR
PO BOX 1898
HATTIESBURG MS 39401

PRINTED NAME Universal Services LLC

SIGNATURE Ryan Dobbs (JR) DATE 10/18/12

Phone Number . . 601 5454512

Shipping terms are F.O.B. destination, freight prepaid

PROJECT LINE: C.E. ROY KITCHEN-ROOF TOP HVAC

ITEM DESCRIPTION	Request Date	QTY	UM	Unit Price	Extended Cost	Delivery Date	Expire Date
VENDOR SHALL Remove existing 10 ton roof top HVAC unit and dispose. Furnish (1) new 10 ton Carrier Roof-top natural gas package unit, Model #48TCDD12A2B5-0AA0, NEW ROOF CURB ADAPTER#LCA120 REPLACE THE GAS LINE, REPLACE ELECTRICAL SERVICE TO UNIT, REPLACE THERMOSTAT #33CSCNACHP-01, AND START UP UNIT FOR A COMPLETE INSTALLATION JOB Vendor shall furnish all labor, material and equipment	10/11/12	1.00	SA	$13,500.00	$13,500.00	10/31/12	11/15/12

TOTAL BID PRICE $13,500.00

RECEIVED
OCT 19 2012

10-18-12;21:13 ;Universal Services 6015456661 # 2/ 2

BILL TO:
CITY OF HATTIESBURG
ACCOUNTING DEPT
PO BOX 1898
HATTIESBURG, MS 39403-1898
FAX INVOICE TO: 601-584-4895

CITY OF HATTIESBURG
P U R C H A S E O R D E R
THE CITY IS NOT LIABLE FOR SALES TAX ID# 64-6000432

POINT OF CONTACT:

Page - 1
Date - 10/19/12
PO No. - 128240
Req No. - 1874

VENDOR MAILING:
GILKEY ELECTRIC SUPPLY CO INC
1300 W PINE ST
PO BOX 17287
HATTIESBURG MS 39404-7287

WILLIAMS, TERESA (601) 5454630
MINUTE BOOK # PENDING
VENDOR # 00001487

SHIP TO :
CITY OF HATTIESBURG
WATER PLANT #2
900 JAMES STREET
HATTIESBURG MS 39401

PROCESSING CODE:

PROJECT LINE: SO ELECTRICAL CORD #6 AWG WITH FOUR CONDUCTORS 6/4

SEND METHOD 1 (601)5543107

Account #	Description	QTY	UM	UNIT COST	TOTAL COST
009677.5495	SO ELECTRICAL CORD #6 AWG WITH FOUR CONDUCTORS 3 6/4	500.00	EA	4.1900	2,095.00

TOTAL CONTRACT AMOUNT NOT TO EXCEED 2,095.00

SUBMIT SEPARATE INVOICES FOR EACH ORDER. PREPAY SHIPPING CHARGES IF ANY AND ADD TO INVOICE.

THIS PO NUMBER MUST APPEAR ON ALL PACKAGES & INVOICES.

FOR CORRECTIONS TO VENDOR ADDRESS ABOVE, CONTACT ACCOUNTING (601) 545-4686.

EDDIE R. MYERS
CITY CLERK

93530

CITY OF HATTIESBURG
QUOTE REQUEST RESPONSE FORM

Page No. 1
Date 10/15/12
Order Number . . 1074 00

GILKEY ELECTRIC SUPPLY CO
1300 W PINE ST
PO BOX 17287
HATTIESBURG MS 39404-7287

Mail To. . . . . CITY OF HATTIESBURG
PURCHASING DIVISION
220 W FRONT ST.2ND FLOOR
PO BOX 1898
HATTIESBURG MS 39401

PRINTED NAME Robby Bennett

Phone Number . . 601 5454512

SIGNATURE Robby B DATE 10/16/2012

Shipping terms are F.O.B. destination, freight prepaid

PROJECT TITLE: SO ELECTRICAL CORD 50 AMP WITH FOUR CONDUCTORS 6/4

ITEM DESCRIPTION	Request Date	QTY	UM	Unit Price	Extended Cost	Delivery Date	Expired Date
SO ELECTRICAL CORD 50 AMP WITH FOUR CONDUCTORS 3 6/4	10/15/12	500.00	EA	4.19	2095.00	0/0	10/17/2012

TOTAL BID PRICE $2095.00

RECEIVED
OCT 19 2012
Verlena Underwood
AWARDED

Accepted
10/19/2012

43530

CITY OF HATTIESBURG
QUOTE REQUEST RESPONSE FORM

Page No. 1
Date - 10/15/12
Order Number . . 1874 OQ

HCP PUMPS AMERICA INC
568 MCCAIG RD
LINCOLN AL 35096-4855

Mail To. . . . . CITY OF HATTIESBURG
PURCHASING DIVISION
220 W FRONT ST.2ND FLOOR
PO BOX 1898
HATTIESBURG MS 39401

PRINTED NAME HCP Pumps America Inc.

Phone Number . . 601 5454512

SIGNATURE [signature] DATE 10/18/2012 Shipping terms are F.O.B. destination, freight prepaid

PROJECT LINE: SO ELECTRICAL CORD #6 AWG WITH FOUR CONDUCTORS 6/4

ITEM DESCRIPTION	Request Date	QTY	UM	Unit Price	Extended Cost	Delivery Date	Expired Date
SO ELECTRICAL CORD #6 AWG WITH FOUR CONDUCTORS 3 6/4	10/12/12	500.00	EA	$4.31 PT			

TOTAL BID PRICE 2,155 00

RECEIVED
OCT 19 2012

BILL TO:
CITY OF HATTIESBURG
ACCOUNTING DEPT
PO BOX 1898
HATTIESBURG, MS 39403-1898
FAX INVOICE TO: 601-584-4895

CITY OF HATTIESBURG
P U R C H A S E O R D E R
THE CITY IS NOT LIABLE FOR SALES TAX ID# 64-6000432

POINT OF CONTACT:

Page - 1
Date - 10/24/12
PO No. - 128363
Req No. - 1880

VENDOR MAILING:
C D W GOVERNMENT
120 S RIVERSIDE
CHICAGO IL 60606-3913

SANFORD, ANGELA (601) 5454560
MINUTE BOOK # PENDING
VENDOR # 90078126

SHIP TO :
CITY OF HATTIESBURG
INFORMATION TECHNOLOGY DIVISION
200 FORREST STREET - 1ST FLOOR
HATTIESBURG MS 39401

PROCESSING CODE:

PROJECT LINE: COMPUTERS FOR HPD DETECTIVES & TRAFFIC COPS

SEND METHOD 0 ( )

Account #	Description	QTY	UM	UNIT COST	TOTAL COST
001091.7327	MOTION TABLET MOTION F5T I5-3317U 64GB 4GB MFG#: LL423422834352 INTERGRATED BAR CODE SCANNER, CAMERA REAR & FRONT, GPS RFID $50.00 WILL BE DEDUCTED FOR EVERY DAY PAST PROMISED DELIVERY DATE.	17.00	EA	2,480.0000	42,160.00
001091.6365	EXTENDED SERVICE Motion Comprehensive Coverage - extended service agreement - 3 years	13.00	EA	370.0000	4,810.00

TOTAL CONTRACT AMOUNT NOT TO EXCEED 46,970.00

SUBMIT SEPARATE INVOICES FOR EACH ORDER. PREPAY SHIPPING CHARGES IF ANY AND ADD TO INVOICE.

THIS PO NUMBER MUST APPEAR ON ALL PACKAGES & INVOICES.

FOR CORRECTIONS TO VENDOR ADDRESS ABOVE, CONTACT ACCOUNTING (601) 545-4686.

EDDIE R. MYERS
CITY CLERK

CITY OF HATTIESBURG
QUOTE REQUEST RESPONSE FORM

Page No. . . . . .
Date 10/22/12
Order Number . . 1880 00

C D W GOVERNMENT
120 S RIVERSIDE
CHICAGO IL 60606-3913

Mail To. . . . . CITY OF HATTIESBURG
PURCHASING DIVISION
230 W FRONT ST.2ND FLOOR
PO BOX 1090
HATTIESBURG MS 39401

Phone Number . . 601 5454512

PRINTED NAME Jordan Mikels

SIGNATURE [signature] DATE 10-24-12

Shipping terms are F.O.B. destination, freight prepaid

PROJECT LINE: COMPUTERS FOR KPD DETECTIVES & TRAFFIC COPS

ITEM DESCRIPTION	Request Date	QTY	UM	Unit Price	Extended Cost	Delivery Date	Expired Date
MOTION TABLET MOTION FST I5-3317U 64GB 4GB MFG#: LL42342283435Z INTERGRATED BAR CODE SCANNER, CAMERA REAR & FRONT, GPS RFID $50.00 WILL BE DEDUCTED FOR EVERY DAY PAST PROMISED DELIVERY DATE.	10/18/12	17.00	EA	2488.85	42160.05	*	11-24-12
EXTENDED SERVICE Motion Comprehensive Coverage - extended service agreement - 3 years	10/18/12	13.00	EA	370.00	4810.00	*	11-24-12

* delivery will be 30-45 days after order is placed.

Angie Sanford

TOTAL BID PRICE 46970.00

RECEIVED
OCT 24 2012
Verline Underwood
AWARDED

QUOTE REQUEST RESPONSE FORM

Page No. 1
Date 10/22/12
Order Number . . 1880 OQ

RICOH CORP
#5 DEDRICK PL
WEST CALDWELL NJ 07006-63

Mail To. . . . . CITY OF HATTIESBURG
PURCHASING DIVISION
220 W FRONT ST.2ND FLOOR
PO BOX 1898
HATTIESBURG MS 39401

Phone Number . . 601 5454512

PRINTED NAME Samer N'Ser

SIGNATURE Samer N'Ser DATE 10/23/2012

Shipping terms are F.O.B. destination, freight prepaid

PROJECT LINE: COMPUTERS FOR HPD DETECTIVES & TRAFFIC COPS

ITEM DESCRIPTION	Request Date	QTY	UM	Unit Price	Extended Cost	Delivery Date	Expired Date
MOTION TABLET MOTION FST I5-3317U 64GB 4GB MFG#: IL423422834352 INTERGRATED BAR CODE SCANNER, CAMERA REAR & FRONT, GPS RFID $50.00 WILL BE DEDUCTED FOR EVERY DAY PAST PROMISED DELIVERY DATE.	10/18/12	17.00	EA	$3,160.00	$53,720.00	21 days after PO	12/15/12
EXTENDED SERVICE Motion Comprehensive Coverage - extended service agreement - 3 years	10/18/12	13.00	EA	$285.00	$3,705.00	21 days after PO	12/15/12

TOTAL BID PRICE $57,425.00

RECEIVED
OCT 24 2012

BILL TO:
CITY OF HATTIESBURG
ACCOUNTING DEPT
PO BOX 1898
HATTIESBURG, MS 39403-1898
FAX INVOICE TO: 601-584-4895

CITY OF HATTIESBURG

P U R C H A S E O R D E R

THE CITY IS NOT LIABLE FOR SALES TAX ID# 64-6000432

POINT OF CONTACT:

Page - 1
Date - 10/26/12
PO No. - 128390
Req No. - 1881

VENDOR MAILING:
WARREN PAVING INC
PO BOX 572
HATTIESBURG MS 39403-0572

WAITS, SHARON (601) 5454640
MINUTE BOOK # PENDING
VENDOR # 00002297

SHIP TO :
CITY OF HATTIESBURG
ENGINEERING/PUBLIC SERVICES
212 WEST FRONT STREET-CENTENNIAL BLDG
HATTIESBURG MS 39401

PROCESSING CODE:

SEND METHOD 1 (601)5442005

PROJECT LINE: SURFACE CONTRACTORS MIX FOR VARIOUS LOCATIONS

Account #	Description	QTY	UM	UNIT COST	TOTAL COST
072201.5400	SURFACE CONTRACTORS SURFACE CONTRACTORS MIX FOR VARIOUS LOCATIONS WITH- IN THE CITY	200.00	EA	54.5000	10,900.00

TOTAL CONTRACT AMOUNT NOT TO EXCEED 10,900.00

SUBMIT SEPARATE INVOICES FOR EACH ORDER. PREPAY SHIPPING CHARGES IF ANY AND ADD TO INVOICE.

THIS PO NUMBER MUST APPEAR ON ALL PACKAGES & INVOICES.

FOR CORRECTIONS TO VENDOR ADDRESS ABOVE, CONTACT ACCOUNTING (601) 545-4686.

EDDIE R. MYERS
CITY CLERK

43530

CITY OF HATTIESBURG
QUOTE REQUEST RESPONSE FORM

Page No. 1
Date - 10/22/12
Order Number . . 1881 OQ

WARREN PAVING INC
PO BOX 572
HATTIESBURG MS 39403-0572

Mail To. . . . . CITY OF HATTIESBURG
PURCHASING DIVISION
220 W FRONT ST.2ND FLOOR
PO BOX 1898
HATTIESBURG MS 39401

Phone Number . . 601 5454512

PRINTED NAME GARLAND BOLEWARE

SIGNATURE GARLAND BOLEWARE DATE 23 OCT 2012

Shipping terms are F.O.B. destination, freight prepaid

PROJECT LINE: 200 TONS SURFACE COURSE ASPHALT FOR VARIOUS LOCATIONS

ITEM DESCRIPTION	Request Date	QTY	UM	Unit Price	Extended Cost	Delivery Date	Expired Date
SURFACE COURSE ASPH 200 TONS SURFACE COURSE ASPHALT FOR USE AT VARIOUS LOCATIONS AROUND THE CITY.	10/19/12	200.00	EA	$54.50/TON	$10,900.00	N/A	11/30/12

TOTAL BID PRICE $10,900.00

S Watts
10/24/12

RECEIVED
OCT 26 2012
Verline Underwood
AWARDED

10/23/2012 05:46 FAX 6015446203 WARREN PAVING
10/22/2012 12:25 FAX 6015442005 WARREN PAVING
OCT-22-2012(MON) 08:58 → BOBBY
002
003
P.003/003

CITY OF HATTIESBURG
QUOTE REQUEST RESPONSE FORM

Page No. 1
Date - 10/22/12
Order Number . . 1881 OQ

DUNN ROADBUILDERS LLC
PO DRAWER 6560
LAUREL MS 39441-6560

Mail To. . . . . CITY OF HATTIESBURG
PURCHASING DIVISION
220 W FRONT ST.2ND FLOOR
PO BOX 1898
HATTIESBURG MS 39401

Phone Number . . 601 5454512

PRINTED NAME Rick Cox

SIGNATURE [signature] DATE 10/22/12

Shipping terms are F.O.B. destination, freight prepaid

PROJECT LINE: 200 TONS SURFACE COURSE ASPHALT FOR VARIOUS LOCATIONS

ITEM DESCRIPTION	Request Date	QTY	UM	Unit Price	Extended Cost	Delivery Date	Expired Date
SURFACE COURSE ASPH 200 TONS SURFACE COURSE ASPHALT FOR USE AT VARIOUS LOCATIONS AROUND THE CITY.	10/19/12	200.00	EA	66.36	13,272.00	10/24/12	11/25/12

TOTAL BID PRICE 13,272.00

RECEIVED
OCT 26 2012

City of Hattiesburg, MS

200 Forrest St.
P.O. Box 1898
Hattiesburg, MS 39401

Master

File Number: 2012-1304

File ID:	2012-1304	**Type:**	Regular Agenda Item	**Status:**	Agenda Ready
Version:	1	**Reference:**		**In Control:**	City Council
				File Created:	10/30/2012
Brief Title:	IBM Contract for 2013			**Final Action:**	
				Minute Book Number:	MB2012-1/386

Title: Authorize Mayor to excute a one year contract 01/01/13 through 12/31/13 with IBM for City Hall AS400's hardware and software for $7888.40.

Notes:

Sponsors:		**Enactment Date:**	
Attachments:	ibm.pdf	**Enactment Number:**	
Contact:		**Meeting Date:**	
Drafter:	Angie Sanford	**Effective Date:**	

History of Legislative File

Version:	Acting Body:	Date:	Action:	Sent To:	Due Date:	Return Date:	Result:
1	City Council	11/06/2012					

Text of Legislative File 2012-1304

Title

Authorize Mayor to excute a one year contract 01/01/13 through 12/31/13 with IBM for City Hall AS400's hardware and software for $7888.40.

Summary

Budget Information

001091.6365

Expenditure Type

Maintenance

Purchasing Item

Regular Purchase

Schedule for ServiceElite

This Schedule contains a listing of the Eligible Machines at the Specified Locations identified below for which IBM will provide the identified Services as described in the referenced Master Services Attachment and any referenced Statements of Work and Change Authorizations. The complete agreement between us about these Services consists of 1) this Schedule 2) the referenced Master Services Attachment and any referenced Statements of Work and Change Authorizations, and 3) the IBM Customer Agreement (or any equivalent agreement in effect between us).

Name and Address of Customer:

CITY OF HATTIESBURG
CITY OF HATTIESBURG

Customer Billing Address:

CITY OF HATTIESBURG
CITY OF HATTIESBURG
PO BOX 1898
HATTIESBURG MS 39403-1898

Master Services Attachment Number: MAT52B9
Statement of Work Number: AD0HHB
Change Authorization Number:
Customer Number: 04177557

Schedule Number: AD0HHB
Revised Schedule: No
Schedule Effective Date: 10/16/2012
Proposal Reference Date: 05/01/2013

Transaction Contract Period:
Start Date: 05/01/2013
End Date: 04/30/2016
Renewal Contract Period: 3 Year(s)

Charge Period Charges / Payment Plan (Inclusive of MES):

WSU One Time Charges:	**0.00**
SWMA ALF One Time Charges:	**0.00**
MMS for CISCO HW One Time Charges:	**0.00**
MMS for CISCO SW One Time Charges:	**0.00**
MMS for Nortel One Time Charges:	**0.00**
One Time Charges:	**0.00**

Maintenance Charges:	**2,809.12**
Service Charges:	**2,485.12**
TOTAL CHARGE PERIOD CHARGES:	**5,294.24**

Annually

Charge Period:
Start Date: 05/01/2013
End Date: 12/31/2013

Accumulated Adjustment Invoicing option: N

Automatic Inventory Increase Option Applies:
Machine Maintenance Services Option #1: Y
Software Services Option #2: Y

Price Protection Option: Opt#1 Annual Price Protection
Pricing Method: Line Item

Type of Discount(s) Applied: Term Incentive

Charges are based on the current inventory and services identified in this Schedule. Actual charges may vary with any additions, deletions, or changes to the inventory or services. Any applicable taxes are not included in the charge amounts herein but will be added to your invoice.

For a Machine subject to usage charges, in addition to the Service charge identified herein, you will be separately billed for usage in accordance with applicable usage rates and billing cycles.

The Parties need not sign this Schedule, unless either of us requests it.

Agreed to:

By: _____
Authorized signature
Name (type or print): _____
Date: _____

Agreed to:

International Business Machines Corporation

By: _____
Authorized signature
Name (type or print): _____
Date: _____

Schedule for ServiceElite

Enterprise Total for Charge Period by Customer Number Inclusive of MES:

Customer No	Customer Name	Customer Location	Charges
04177557	CITY OF HATTIESBURG	200 FORREST ST, CITY OF HATTIESBURG, HATTIESBURG MS 39401-3451	5,294.24
Total			**5,294.24**

Note: One Time Charges are not included in the Total

Schedule for ServiceElite

Maintenance Machine List

--Eligible Machine Description-- A Machine is only considered "Eligible" if it is operational and in conformance with its official published specifications on the contract start date.

Mfg	Type	Mod/ Feat	Add/ Rem	Order/ Serial Number	Related Order/ Serial Number	Product Description	Qty.	Type of Svc	Maint. Svc	Charges	Charges Start	Charges Stop
Specified Location: 04177557						**City, State: HATTIESBURG MS 39401-3451**						
IBM	9406	520		0000B29EC		ESERVER I5	1	B	1	2,809.12 H		
Subtotal Without MES										**2,809.12**		
Subtotal With MES										**2,809.12**		

Total Charge Period Charges for Maintenance Machine List Without MES **$2,809.12**

Total Charge Period Charges for Maintenance Machine List With MES **$2,809.12**

See Legend for Details

IBM Schedule for ServiceElite

Services List

Customer Technical Contact Name (if applicable):
Customer Primary Technical Contact name :
Customer Primary Technical Contact phone number :

----------Eligible Machine Description----------

Type	Model	Serial/ Order Number	Support Service	Product Group / Service Option	Qty	Charges*	Services Start	Charges Start	Charges Stop
			Specified Location: 04177557	**City, State: HATTIESBURG MS 39401-3451**					
			SWMA FOR i5OS PER PROCESSOR			2,485.12			
				SUPPORT SUBSCRIPTION P10 CHARGEABLE PROCESSORS FULL SHIFT					
9406	520	0000B29EC			1				
Subtotal						**2,485.12**			
Total Charge Period Charges for Services List						**$ 2,485.12**			

Note: One Time Charges are not included in these totals.
See Legend for Details

Schedule for ServiceElite

Legends:

[1]Charge adjustments related to inventory and Service changes will be accumulated and invoiced with your next standard invoicing cycle (may be sooner for annual or semiannual payment plans)

[2]TYPE OF SERVICE

A) On-Site Repair/Exchange Services, Monday through Friday (excluding holidays), 8am to 5pm, next business day
B) On-Site Repair/Exchange Services, 7 days a week, 24hrs/day.
C) On-Site Repair/Exchange Services, Monday through Friday (excluding holidays), 8am to 5pm, 4 hour response objective
This type of repair Service includes a response objective and is not a guarantee.
D) On-Site Repair/Exchange Services, 7 days a week, 24hrs/day, 2 hour response objective.
This type of repair Service includes a response objective and is not a guarantee.
X) EasyServe (remotely delivered services)

[3]MAINTENANCE SERVICES

1) Maintenance of IBM Machines
2) Maintenance of Non-IBM Machines
3) Warranty Service Upgrade
4) Maintenance of Non-IBM Machines - Cisco Products
5) Maintenance of IBM Machines - Enhanced Service Response
6) Service for Machines Withdrawn from IBM Maintenance
7) Non-IBM Service for Machines Withdrawn from IBM Maintenance
8) Maintenance of IBM Machines (Labor Only)
9) Non-IBM Memory Exchange
10) Enhanced Parts Inventory
11) Spare Machine
12) Key Operator Support
13) Maintenance of non-IBM Machines during the Manufacturer's Warranty Period
16) IBM Maintenance Services - First Line Maintenance for Wincor Nixdorf ATMs
17) IBM Maintenance Services - Applications Maintenance Services for Wincor Nixdorf ATMs
18) Post Installation Coverage (PIC) Service Upgrade, for selected Non-IBM Machines

[4]Charges shown are for the Charge Period

A (C) indicates a Machine that will have usage charges billed separately.
An (E) indicates a Machine that has been announced as withdrawn from generally available Maintenance Service.
An (F) indicates an assumptive Product included in the total Charge Period Price that has a manually inserted serial number and configuration provided by the customer.
An (H) identifies a Machine on an existing ServiceElite/ServiceSuite/ ServiceElect CHIS contract with duplicate Maintenance Services coverage.
A (K) indicates assumptive Products included in the total Charge Period Price that are based on the customer provided configuration.
An (M) indicates a Miscellaneous Equipment Specification (MES) on order is not installed and applicable pricing not included.
An (N) indicates that the Product is a non-GSA Schedule item .
An (O) indicates a one time charge.
A (P) indicates a Machine or Service with coverage on a non-CHIS contract.
An (R) indicates the usage charge rate (feet, hours, or impressions) for a Machine under a usage plan.
An (S) indicates a manual order installation date change.
A (U) indicates usage charges which are measured in either feet, hours, or impressions.
A (W) indicates a Machine under warranty.
An (X) indicates On-order Products which are shown for planning purposes only.
A (Y) indicates On-order MES Products which are shown for planning purposes only. These charges are included in the related Machine.

[5]Charges Start/Stop dates shown are those that differ from the Contract Period Start/End Dates

Schedule for ServiceElite

This Schedule contains a listing of the Eligible Machines at the Specified Locations identified below for which IBM will provide the identified Services as described in the referenced Master Services Attachment and any referenced Statements of Work and Change Authorizations. The complete agreement between us about these Services consists of 1) this Schedule 2) the referenced Master Services Attachment and any referenced Statements of Work and Change Authorizations, and 3) the IBM Customer Agreement (or any equivalent agreement in effect between us).

Name and Address of Customer:

CITY OF HATTIESBURG
CITY OF HATTIESBURG
200 FORREST ST
HATTIESBURG MS 39401-3451

Customer Billing Address:

CITY OF HATTIESBURG
CITY OF HATTIESBURG
PO BOX 1898
HATTIESBURG MS 39403-1898

Master Services Attachment Number: MAT52B9
Statement of Work Number: AT52B9
Change Authorization Number:
Customer Number: 04177557

Schedule Number: AT52B9
Revised Schedule: No
Schedule Effective Date: 05/21/2007
Proposal Reference Date:

Transaction Contract Period:
Start Date: 05/01/2010
End Date: 04/30/2013
Renewal Contract Period: 3 Year(s)

***Charge Period Charges / Payment Plan (Inclusive of MES):**

WSU One Time Charges:	**0.00**
SWMA ALF One Time Charges:	**0.00**
MMS for CISCO HW One Time Charges:	**0.00**
MMS for CISCO SW One Time Charges:	**0.00**
MMS for Nortel One Time Charges:	**0.00**
One Time Charges:	**0.00**

***Maintenance Charges:**	**1,376.44**
***Service Charges:**	**1,217.72**
***TOTAL CHARGE PERIOD CHARGES:**	**2,594.16**

Annually

Charge Period:
Start Date: 01/01/2013
End Date: 04/30/2013

[1]Accumulated Adjustment Invoicing option: N

Automatic Inventory Increase Option Applies:
Machine Maintenance Services Option #1: Y
Software Services Option #2: Y

Price Protection Option: Opt#1 Annual Price Protection
Pricing Method: Line Item

Type of Discount(s) Applied: Term Incentive

* Charges are based on the current inventory and services identified in this Schedule. Actual charges may vary with any additions, deletions, or changes to the inventory or services. Any applicable taxes are not included in the charge amounts herein but will be added to your invoice.

For a Machine subject to usage charges, in addition to the Service charge identified herein, you will be separately billed for usage in accordance with applicable usage rates and billing cycles.

The Parties need not sign this Schedule, unless either of us requests it.

Agreed to:

CITY OF HATTIESBURG

By: _____
Authorized signature
Name (type or print): _____
Date: _____

Agreed to:

International Business Machines Corporation

By: _____
Authorized signature
Name (type or print): _____
Date: _____

Schedule for ServiceElite

Enterprise Total for Charge Period by Customer Number Inclusive of MES:

Customer No.	Customer Name	Customer Location	Charges
04177557	CITY OF HATTIESBURG	200 FORREST ST, CITY OF HATTIESBURG, HATTIESBURG MS 39401-3451	2,594.16
Total			**2,594.16**

Note: One Time Charges are not included in the Total

Schedule for ServiceElite

Maintenance Machine List

--Eligible Machine Description-- A Machine is only considered "Eligible" if it is operational and in conformance with its official published specifications on the contract start date.

Mfg	Type	Mod/ Feat	Add/ Rem	Order/ Serial Number	Related Order/ Serial Number	Product Description	Qty.	Type of Svc[2]	Maint. Svc	Charges[4]	Charges Start	Charges Stop
Specified Location: 04177557						**City, State: HATTIESBURG MS 39401-3451**						
IBM	9406	520		0000B29EC		ESERVER I5	1	B	1	1,376.44		
Subtotal Without MES										**1,376.44**		
Subtotal With MES										**1,376.44**		

Total Charge Period Charges for Maintenance Machine List Without MES **$1,376.44**

Total Charge Period Charges for Maintenance Machine List With MES **$1,376.44**

See Legend for Details

Schedule for ServiceElite

Services List

Customer Technical Contact Name (if applicable):
Customer Primary Technical Contact name :
Customer Primary Technical Contact phone number :

----------Eligible Machine Description----------

Type	Model	Serial/ Order Number	Support Service	Product Group / Service Option	Qty	Charges *	Services Start	Charges Start *	Charges Stop *
			Specified Location: 04177557	**City, State: HATTIESBURG MS 39401-3451**					
			SWMA FOR i5OS PER PROCESSOR			1,217.72			
				SUBSCRIPTION SUPPORT P10 CHARGEABLE PROCESSORS FULL SHIFT					
9406	520	0000B29EC			1				
Subtotal						**1,217.72**			
Total Charge Period Charges for Services List						**$ 1,217.72**			

Note: One Time Charges are not included in these totals.
See Legend for Details

Schedule for ServiceElite

Legends:

[1]Charge adjustments related to inventory and Service changes will be accumulated and invoiced with your next standard invoicing cycle (may be sooner for annual or semiannual payment plans)

[2]TYPE OF SERVICE

A) On-Site Repair/Exchange Services, Monday through Friday (excluding holidays), 8am to 5pm, next business day
B) On-Site Repair/Exchange Services, 7 days a week, 24hrs/day.
C) On-Site Repair/Exchange Services, Monday through Friday (excluding holidays), 8am to 5pm, 4 hour response objective
This type of repair Service includes a response objective and is not a guarantee.
D) On-Site Repair/Exchange Services, 7 days a week, 24hrs/day, 2 hour response objective.
This type of repair Service includes a response objective and is not a guarantee.
X) EasyServe (remotely delivered services)

[3]MAINTENANCE SERVICES

1) Maintenance of IBM Machines
2) Maintenance of Non-IBM Machines
3) Warranty Service Upgrade
4) Maintenance of Non-IBM Machines - Cisco Products
5) Maintenance of IBM Machines - Enhanced Service Response
6) Service for Machines Withdrawn from IBM Maintenance
7) Non-IBM Service for Machines Withdrawn from IBM Maintenance
8) Maintenance of IBM Machines (Labor Only)
9) Non-IBM Memory Exchange
10) Enhanced Parts Inventory
11) Spare Machine
12) Key Operator Support
13) Maintenance of non-IBM Machines during the Manufacturer's Warranty Period
16) IBM Maintenance Services - First Line Maintenance for Wincor Nixdorf ATMs
17) IBM Maintenance Services - Applications Maintenance Services for Wincor Nixdorf ATMs
18) Post Installation Coverage (PIC) Service Upgrade, for selected Non-IBM Machines

[4]Charges shown are for the Charge Period

A (C) indicates a Machine that will have usage charges billed separately.
An (E) indicates a Machine that has been announced as withdrawn from generally available Maintenance Service.
An (F) indicates an assumptive Product included in the total Charge Period Price that has a manually inserted serial number and configuration provided by the customer.
An (H) identifies a Machine on an existing ServiceElite/ServiceSuite/ ServiceElect CHIS contract with duplicate Maintenance Services coverage.
A (K) indicates assumptive Products included in the total Charge Period Price that are based on the customer provided configuration.
An (M) indicates a Miscellaneous Equipment Specification (MES) on order is not installed and applicable pricing not included.
An (N) indicates that the Product is a non-GSA Schedule item .
An (O) indicates a one time charge.
A (P) indicates a Machine or Service with coverage on a non-CHIS contract.
An (R) indicates the usage charge rate (feet, hours, or impressions) for a Machine under a usage plan.
An (S) indicates a manual order installation date change.
A (U) indicates usage charges which are measured in either feet, hours, or impressions.
A (W) indicates a Machine under warranty.
An (X) indicates On-order Products which are shown for planning purposes only.
A (Y) indicates On-order MES Products which are shown for planning purposes only. These charges are included in the related Machine.

[6]Charges Start/Stop dates shown are those that differ from the Contract Period Start/End Dates

City of Hattiesburg, MS

200 Forrest St.
P.O. Box 1898
Hattiesburg, MS 39401

Master

File Number: 2012-1294

File ID:	2012-1294	**Type:**	Regular Agenda Item	**Status:**	Agenda Ready
Version:	1	**Reference:**		**In Control:**	City Council
				File Created:	10/30/2012
Brief Title:	Authorize Mayor to Renew Maintenance Contract between the City of Hattiesburg and Kone Inc. for maintenance on elevator equipment located in City Hall.			**Final Action:**	
				Minute Book Number:	MB2012-1/386

Title:

Authorize Mayor to Renew Maintenance Contract between the City of Hattiesburg and Kone Inc. for maintenance on elevator equipment located in City Hall.

Notes:

Sponsors:		**Enactment Date:**	
Attachments:	11-06-Kone Elevator Maintenance.pdf	**Enactment Number:**	
Contact:		**Meeting Date:**	11/06/2012
Drafter:	Michael Pope	**Effective Date:**	

History of Legislative File

Version:	Acting Body:	Date:	Action:	Sent To:	Due Date:	Return Date:	Result:
1	City Council	11/06/2012					

Text of Legislative File 2012-1294

Title

Authorize Mayor to Renew Maintenance Contract between the City of Hattiesburg and Kone Inc. for maintenance on elevator equipment located in City Hall.

Summary

Authorize Mayor to Renew Maintenance Contract between the City of Hattiesburg and Kone Inc. for maintenance on equipment located in City Hall.

INVOICE OR 138764

KONE

Invoice number: 221017002 **Invoice Date:** 10/01/2012 **Customer PO No:** **KONE Order No:** 40029933 **Billing Type:** YMI0 **Date work performed:** 12/31/2012	**Area Office:** Hattiesburg - 152 5252 2A Halls Mill Road Mobile AL 36619 Ph: 251-661-7522 Fax: 251-661-7516 **KONE Inc., Federal** 36 2357423
Bill To: CITY OF HATTIESBURG 200 FORREST ST HATTIESBURG MS 39401-3451 USA	**Location/Project:** HATTIESBURG CITY HALL 200 FORREST ST HATTIESBURG MS 39401 USA
Payment Terms: Net 10	

This invoice is for maintenance coverage per your agreement with KONE Inc.
Billing period is 10/01/2012 to 12/31/2012.

Contract# 40029933 HATTIESBURG CITY HALL

Subtotal	$	1,068.36
Total Invoice Amount	$	1,068.36

Invoices not paid within 30 days are subject to a service charge of 1.5% per month, or the maximum permitted by law

Please return this portion with your payment

PAYMENT ADVICE

We also accept VISA/Mastercard or EFT payments

KONE

Payer: CITY OF HATTIESBURG 200 FORREST ST HATTIESBURG MS 39401-3451 USA	**Invoice number:** 221017002 **Invoice Date:** 10/01/2012 **Customer Number:** 167002 **KONE Order No:** 40029933 **Area Office No:** U152 **Billing Type:** YMI0
Remit to: KONE Inc. P. O. BOX 429 MOLINE, IL 61266-0429 *Use this address for payments only. Direct calls and area correspondence to our area office above.*	***Amount paid if different than invoice amount: $*** ***INVOICE AMOUNT: $ 1,068.36***

022101700200001068360

City of Hattiesburg, MS

200 Forrest St.
P.O. Box 1898
Hattiesburg, MS 39401

Master

File Number: 2012-1275

File ID:	2012-1275	**Type:**	Regular Agenda Item	**Status:**	Agenda Ready
Version:	1	**Reference:**		**In Control:**	City Council
				File Created:	10/22/2012
Brief Title:	Forfeitures			**Final Action:**	
				Minute Book Number:	MB2012-1/386

Title:

Acknowledge receipt of Declaration of Forfeitures from the Forrest/Perry Metro Narcotics Task Force forfeiting $4,170.00 to the Hattiesburg Police Department. The monies will be forfeited in the following manner: $3,336.00 to be placed in the Hattiesburg Police Department's Forfeiture Fund and $834.00 to the Forrest County District Attorney's Office.

Notes:

Sponsors:		**Enactment Date:**	
Attachments:	Scan_Doc0017	**Enactment Number:**	
Contact:		**Meeting Date:**	11/06/2012
Drafter:	Tammy Leggett	**Effective Date:**	

History of Legislative File

Version:	Acting Body:	Date:	Action:	Sent To:	Due Date:	Return Date:	Result:
1	City Council	11/06/2012					

Text of Legislative File 2012-1275

Title

Acknowledge receipt of Declaration of Forfeitures from the Forrest/Perry Metro Narcotics Task Force forfeiting $4,170.00 to the Hattiesburg Police Department. The monies will be forfeited in the following manner: $3,336.00 to be placed in the Hattiesburg Police Department's Forfeiture Fund and $834.00 to the Forrest County District Attorney's Office.

Summary

Declaration of Forfeitures

STATE OF MISSISSIPPI
COUNTY OF FORREST

DECLARATION OF FORFEITURE

On the 17th day of July, 2010, Notice of Intention to Forfeit Seized Property was given to **Samuel Valle** by personal service from Lt. Keith Crawford of the Hattiesburg Police Department pursuant to MISS. CODE ANN. § 41-29-176 (5) (1972), as amended. Said Notice required any interested party to file a petition requesting judicial review and contesting the forfeiture within 30 days after the receipt of the Notice of Intent to Forfeit Seized Property, or the property described below would be forfeited to the Hattiesburg Police Department.

DESCRIPTION OF PROPERTY:	**APPROXIMATE VALUE:**
Seven Hundred Seventy-One Dollars in U. S. Currency	$771.00

More than thirty (30) days have passed from the date on which the Notice of Intention to Forfeit Seized Property was provided to claimant and no Petition contesting the forfeiture and requesting judicial review was filed in the county court, if a county court exits, or otherwise in the circuit court of the county in which the seizure was made or in the county in which the criminal prosecution is brought or served upon the attorney or representative of the seizing agency.

IT IS, THEREFORE, hereby declared that the above described property shall be forfeited in the following manner: $616.80 to the Hattiesburg Police Department, and $154.20 to the Forrest County District Attorney's Office, all to be distributed, used or disposed of according to law.

SO DECLARED, on this the 8th day of February, 2012.

Joshua Paul Fortenberry
Assistant District Attorney

This day personally before me, the undersigned authority in and for the State and County aforesaid, the above named, Joshua Paul Fortenberry, who solemnly and truly declared and affirmed before me that the matters and facts set forth in the foregoing Declaration of Forfeiture are true and correct as herein stated.

Affirmed and Subscribed before me on this the 8 day of February, 2012.

Mary B. Taylor
Notary Public

My Commission Expires: _____

STATE OF MISSISSIPPI
MARY B. TAYLOR
ID No. 53120553
Comm Expires
August 14, 2012
NOTARY PUBLIC
FORREST COUNTY

STATE OF MISSISSIPPI
COUNTY OF FORREST

DECLARATION OF FORFEITURE

On the 4th day of November, 2011, Notice of Intention to Forfeit Seized Property was given to **Luther Stanphill** by personal service from Lt. Mark Mitchell of the Hattiesburg Police Department pursuant to MISS. CODE ANN. § 41-29-176 (5) (1972), as amended. Said Notice required any interested party to file a petition requesting judicial review and contesting the forfeiture within 30 days after the receipt of the Notice of Intent to Forfeit Seized Property, or the property described below would be forfeited to the Hattiesburg Police Department.

DESCRIPTION OF PROPERTY:	**APPROXIMATE VALUE:**
Three Hundred Ten Dollars in U. S. Currency	$310.00

More than thirty (30) days have passed from the date on which the Notice of Intention to Forfeit Seized Property was provided to claimant and no Petition contesting the forfeiture and requesting judicial review was filed in the county court, if a county court exits, or otherwise in the circuit court of the county in which the seizure was made or in the county in which the criminal prosecution is brought or served upon the attorney or representative of the seizing agency.

IT IS, THEREFORE, hereby declared that the above described property shall be forfeited in the following manner: $248.00 to the Hattiesburg Police Department, and $62.00 to the Forrest County District Attorney's Office, all to be distributed, used or disposed of according to law.

SO DECLARED, on this the 8th day of February, 2012.

Joshua Paul Fortenberry
Assistant District Attorney

This day personally before me, the undersigned authority in and for the State and County aforesaid, the above named, Joshua Paul Fortenberry, who solemnly and truly declared and affirmed before me that the matters and facts set forth in the foregoing Declaration of Forfeiture are true and correct as herein stated.

Affirmed and Subscribed before me on this the 8 day of February, 2012.

Mary B. Taylor
Notary Public

My Commission Expires: _____

STATE OF MISSISSIPPI
MARY B. TAYLOR
ID No 53120553
Comm Expires
August 14, 2012
NOTARY PUBLIC
FORREST COUNTY

STATE OF MISSISSIPPI
COUNTY OF FORREST

DECLARATION OF FORFEITURE

On the 13th day of November, 2011, Notice of Intention to Forfeit Seized Property was given to **Kendall Benton** by personal service from Lt. Mark Mitchell of the Hattiesburg Police Department pursuant to MISS. CODE ANN. § 41-29-176 (5) (1972), as amended. Said Notice required any interested party to file a petition requesting judicial review and contesting the forfeiture within 30 days after the receipt of the Notice of Intent to Forfeit Seized Property, or the property described below would be forfeited to the Hattiesburg Police Department.

DESCRIPTION OF PROPERTY:	**APPROXIMATE VALUE:**
Nine Hundred Fifty-One Dollars in U. S. Currency	$951.00

More than thirty (30) days have passed from the date on which the Notice of Intention to Forfeit Seized Property was provided to claimant and no Petition contesting the forfeiture and requesting judicial review was filed in the county court, if a county court exits, or otherwise in the circuit court of the county in which the seizure was made or in the county in which the criminal prosecution is brought or served upon the attorney or representative of the seizing agency.

IT IS, THEREFORE, hereby declared that the above described property shall be forfeited in the following manner: $760.80 to the Hattiesburg Police Department, and $190.20 to the Forrest County District Attorney's Office, all to be distributed, used or disposed of according to law.

SO DECLARED, on this the 8th day of February, 2012.

Joshua Paul Fortenberry
Assistant District Attorney

This day personally before me, the undersigned authority in and for the State and County aforesaid, the above named, Joshua Paul Fortenberry, who solemnly and truly declared and affirmed before me that the matters and facts set forth in the foregoing Declaration of Forfeiture are true and correct as herein stated.

Affirmed and Subscribed before me on this the 8 day of February, 2012.

Mary B. Taylor
Notary Public

My Commission Expires: _____

STATE OF MISSISSIPPI
MARY B. TAYLOR
ID No 53120553
Comm Expires
August 14, 2012
NOTARY PUBLIC
FORREST COUNTY

STATE OF MISSISSIPPI
COUNTY OF FORREST

DECLARATION OF FORFEITURE

On the 26th day of August, 2011, Notice of Intention to Forfeit Seized Property was given to **Thomas Tatum** by personal service from Officer Stephan Harris of the Hattiesburg Police Department pursuant to MISS. CODE ANN. § 41-29-176 (5) (1972), as amended. Said Notice required any interested party to file a petition requesting judicial review and contesting the forfeiture within 30 days after the receipt of the Notice of Intent to Forfeit Seized Property, or the property described below would be forfeited to the Hattiesburg Police Department.

DESCRIPTION OF PROPERTY:	**APPROXIMATE VALUE:**
Ninety Dollars in U. S. Currency	$90.00

More than thirty (30) days have passed from the date on which the Notice of Intention to Forfeit Seized Property was provided to claimant and no Petition contesting the forfeiture and requesting judicial review was filed in the county court, if a county court exits, or otherwise in the circuit court of the county in which the seizure was made or in the county in which the criminal prosecution is brought or served upon the attorney or representative of the seizing agency.

IT IS, THEREFORE, hereby declared that the above described property shall be forfeited in the following manner: $72.00 to the Hattiesburg Police Department, and $18.00 to the Forrest County District Attorney's Office, all to be distributed, used or disposed of according to law.

SO DECLARED, on this the 8th day of February, 2012.

Joshua Paul Fortenberry
Assistant District Attorney

This day personally before me, the undersigned authority in and for the State and County aforesaid, the above named, Joshua Paul Fortenberry, who solemnly and truly declared and affirmed before me that the matters and facts set forth in the foregoing Declaration of Forfeiture are true and correct as herein stated.

Affirmed and Subscribed before me on this the 8 day of February, 2012.

Mary B. Taylor
Notary Public

My Commission Expires: _____

STATE OF MISSISSIPPI
MARY B. TAYLOR
ID No 53120553
Comm Expires
August 14, 2012
NOTARY PUBLIC
FORREST COUNTY

STATE OF MISSISSIPPI
COUNTY OF FORREST

DECLARATION OF FORFEITURE

On the 27th day of November, 2011, Notice of Intention to Forfeit Seized Property was given to **Marcus Lofton** by personal service from Officer Stephan Harris of the Hattiesburg Police Department pursuant to MISS. CODE ANN. § 41-29-176 (5) (1972), as amended. Said Notice required any interested party to file a petition requesting judicial review and contesting the forfeiture within 30 days after the receipt of the Notice of Intent to Forfeit Seized Property, or the property described below would be forfeited to the Hattiesburg Police Department.

DESCRIPTION OF PROPERTY:	**APPROXIMATE VALUE:**
Eight Hundred Sixty Dollars in U. S. Currency	$860.00

More than thirty (30) days have passed from the date on which the Notice of Intention to Forfeit Seized Property was provided to claimant and no Petition contesting the forfeiture and requesting judicial review was filed in the county court, if a county court exits, or otherwise in the circuit court of the county in which the seizure was made or in the county in which the criminal prosecution is brought or served upon the attorney or representative of the seizing agency.

IT IS, THEREFORE, hereby declared that the above described property shall be forfeited in the following manner: $688.00 to the Hattiesburg Police Department, and $172.00 to the Forrest County District Attorney's Office, all to be distributed, used or disposed of according to law.

SO DECLARED, on this the 8th day of February, 2012.

Joshua Paul Fortenberry
Assistant District Attorney

This day personally before me, the undersigned authority in and for the State and County aforesaid, the above named, Joshua Paul Fortenberry, who solemnly and truly declared and affirmed before me that the matters and facts set forth in the foregoing Declaration of Forfeiture are true and correct as herein stated.

Affirmed and Subscribed before me on this the 8 day of February, 2012.

Mary B. Taylor
Notary Public

My Commission Expires: _____

STATE OF MISSISSIPPI
MARY B. TAYLOR
ID No 53120553
Comm Expires
August 14, 2012
NOTARY PUBLIC
FORREST COUNTY

STATE OF MISSISSIPPI
COUNTY OF FORREST

DECLARATION OF FORFEITURE

On the 17th day of November, 2011, Notice of Intention to Forfeit Seized Property was given to **Toby Woullard** by personal service from Lt. Mark Mitchell of the Hattiesburg Police Department pursuant to MISS. CODE ANN. § 41-29-176 (5) (1972), as amended. Said Notice required any interested party to file a petition requesting judicial review and contesting the forfeiture within 30 days after the receipt of the Notice of Intent to Forfeit Seized Property, or the property described below would be forfeited to the Hattiesburg Police Department.

DESCRIPTION OF PROPERTY:	**APPROXIMATE VALUE:**
Seven Hundred Seventy-Two Dollars in U. S. Currency	$772.00

More than thirty (30) days have passed from the date on which the Notice of Intention to Forfeit Seized Property was provided to claimant and no Petition contesting the forfeiture and requesting judicial review was filed in the county court, if a county court exits, or otherwise in the circuit court of the county in which the seizure was made or in the county in which the criminal prosecution is brought or served upon the attorney or representative of the seizing agency.

IT IS, THEREFORE, hereby declared that the above described property shall be forfeited in the following manner: $617.60 to the Hattiesburg Police Department, and $154.40 to the Forrest County District Attorney's Office, all to be distributed, used or disposed of according to law.

SO DECLARED, on this the 8th day of February, 2012.

Joshua Paul Fortenberry
Assistant District Attorney

This day personally before me, the undersigned authority in and for the State and County aforesaid, the above named, Joshua Paul Fortenberry, who solemnly and truly declared and affirmed before me that the matters and facts set forth in the foregoing Declaration of Forfeiture are true and correct as herein stated.

Affirmed and Subscribed before me on this the 8 day of February, 2012.

Mary B. Taylor
Notary Public

My Commission Expires: _____

STATE OF MISSISSIPPI
MARY B. TAYLOR
ID No 53120553
Comm Expires
August 14, 2012
NOTARY PUBLIC
FORREST COUNTY

STATE OF MISSISSIPPI
COUNTY OF FORREST

DECLARATION OF FORFEITURE

On the 19th day of October, 2011, Notice of Intention to Forfeit Seized Property was given to **Herbert Roberts** by personal service from Lt. Mark Mitchell of the Hattiesburg Police Department pursuant to MISS. CODE ANN. § 41-29-176 (5) (1972), as amended. Said Notice required any interested party to file a petition requesting judicial review and contesting the forfeiture within 30 days after the receipt of the Notice of Intent to Forfeit Seized Property, or the property described below would be forfeited to the Hattiesburg Police Department.

DESCRIPTION OF PROPERTY:	**APPROXIMATE VALUE:**
Four Hundred Sixteen Dollars in U. S. Currency	$416.00

More than thirty (30) days have passed from the date on which the Notice of Intention to Forfeit Seized Property was provided to claimant and no Petition contesting the forfeiture and requesting judicial review was filed in the county court, if a county court exits, or otherwise in the circuit court of the county in which the seizure was made or in the county in which the criminal prosecution is brought or served upon the attorney or representative of the seizing agency.

IT IS, THEREFORE, hereby declared that the above described property shall be forfeited in the following manner: $332.80 to the Hattiesburg Police Department, and $83.20 to the Forrest County District Attorney's Office, all to be distributed, used or disposed of according to law.

SO DECLARED, on this the 8th day of February, 2012.

Joshua Paul Fortenberry
Assistant District Attorney

This day personally before me, the undersigned authority in and for the State and County aforesaid, the above named, Joshua Paul Fortenberry, who solemnly and truly declared and affirmed before me that the matters and facts set forth in the foregoing Declaration of Forfeiture are true and correct as herein stated.

Affirmed and Subscribed before me on this the 8 day of February, 2012.

Mary B. Taylor
Notary Public

My Commission Expires:

STATE OF MISSISSIPPI
MARY B. TAYLOR
ID No 53120553
Comm Expires
August 14, 2012
NOTARY PUBLIC
FORREST COUNTY

City of Hattiesburg, MS

200 Forrest St.
P.O. Box 1898
Hattiesburg, MS 39401

Master

File Number: 2012-1263

File ID:	2012-1263	**Type:**	Regular Agenda Item	**Status:**	Agenda Ready
Version:	1	**Reference:**		**In Control:**	City Council
				File Created:	10/12/2012
Brief Title:	Permanent utility easement from Southern Bone & Joint clinic.			**Final Action:**	
				Minute Book Number:	MB2012-1/386

Title:

Acknowledge receipt of permanent utility easement from Pointe Properties, LLC crossing a portion of Forrest County Tax Parcel No. 2-040B-29-004.02 to provide access to utilities for Southern Bone and Joint clinic.

Notes:

Sponsors:		**Enactment Date:**	
Attachments:	Southern Bone & Joint Easement	**Enactment Number:**	
Contact:		**Meeting Date:**	11/06/2012
Drafter:	Sharon Waits	**Effective Date:**	

History of Legislative File

Version:	Acting Body:	Date:	Action:	Sent To:	Due Date:	Return Date:	Result:
1	City Council	11/06/2012					

Text of Legislative File 2012-1263

Title

Acknowledge receipt of permanent utility easement from Pointe Properties, LLC crossing a portion of Forrest County Tax Parcel No. 2-040B-29-004.02 to provide access to utilities for Southern Bone and Joint clinic.

Summary

Acknowledge receipt of permanent utiltiy easement from Pointe Properties, LLC crossing a portion of Forrest County Tax Parcel No. 2-040B-29-004.02 to provide access to utilities for Southern Bone and Joint clinic.

Budget Information

Expenditure Type

Purchasing Item

Publication Information

Grantee, prepared by and return to:	**Grantor Address:**
City of Hattiesburg	Pointe Properties, LLC
P.O. Box 1898	3688 Veterans Memorial Drive
Hattiesburg, MS 39403	Hattiesburg, MS 39401
Phone: 601-545-4500	**Phone:** 601-554-7449
Account No.	**Business No.**

PERMANENT UTILITY EASEMENT

INDEXING INSTRUCTIONS: Southwest ¼ of the Northwest ¼, Section 29, Township 3 North, Range 13 West
City of Hattiesburg, Forrest County, Mississippi

Shows, Dearman and Waits, Inc.
Consulting Engineers
Project No.: 14744
County Tax Parcel No.: 2-040B-29-004.02

THE STATE OF MISSISSIPPI

County of Forrest

City of Hattiesburg

For and in consideration of Ten Dollars ($10.00), and other good and valuable considerations, including the benefits to be derived herefrom, the receipt and sufficiency of which is hereby acknowledged, I/we, the undersigned, hereby grant, bargain, sell, and convey unto the City of Hattiesburg, Mississippi, a municipal corporation, a **Permanent Utility Easement** over, across and upon a parcel of real property, for the construction and maintenance of a proposed water meter on the following described property located in the City of Hattiesburg, County of Forrest, State of Mississippi:

> A part of the Southwest 1/4 of the Northwest 1/4 of Section 29, Township 4 North, Range 13 West, in the City of Hattiesburg, County of Forrest, State of Mississippi, and being more particularly described as:
>
> **Commencing** at the Northwest Corner of the said Southwest 1/4 of the Northwest 1/4,
>
> - thence run S00°17'11"W and along the West Line of Section 29 for 2,333.00 feet,
> - thence run East for 1,120.70 feet to a Point on the Western Right-of-Way Line of U.S. Highway 11, also known as Veterans Memorial Drive,
> - thence run N33°47'14"E and along said Western Right-of-Way Line for 304.35 feet,
> - thence run N24°18'30"E and along said Western Right-of-Way Line for 342.10 feet,
> - thence run North for 699.60 feet,
> - thence run West for 544.90 feet to the Northwest Line of the Orthopedic Hospital building for the **Point of Beginning**;
> - thence run S43°38'56"W and along said Northwest Line for 10.00 feet,
> - thence run N46°21'04"W for 29.01 feet to the Southeast Edge of the parking lot,
> - thence run N43°38'56"E and along said Southeast Edge for 10.00 feet,

- thence run S46°21'04"E for 29.01 feet to the **Point of Beginning,**
- comprising 0.01 Acres (290 Square Feet), more or less.

The Grantee herein is given full rights to do whatever may be necessary and proper for the enjoyment of the rights granted herein, including the right of ingress and egress and the right to clear said easement of selected vegetation such as shrubs, trees, and other vegetation, change of grade, installation and/or removal of pavements and any other structure named herein or otherwise as may be necessary to install and maintain a water meter and its accessories. The Grantee will restore any damage caused by this action.

It is further understood and agreed that the consideration herein named is in full, complete and final payment and settlement of any claims or demands for damage accrued, accruing, or to accrue to the grantors herein, their heirs, assigns, or legal representatives, for or on account of the construction and maintenance of the proposed water meter, water damage, and/or any other damage, right or claim whatsoever.

It is further understood and agreed that this instrument constitutes the entire agreement between the grantor and the grantee, there being no oral agreements or representations of any kind.

Witness (my) (our) signature this the 11th day of OCTOBER A.D., 20 12

10/11/12 **Signature/Date:** _____ **Signature/Date:** _____
Print Name: DAVID M. BURCKEL **Print Name:**

Signature/Date: _____ **Signature/Date:** _____
Print Name: **Print Name:**

STATE OF MISSISSIPPI

COUNTY OF FORREST

Personally appeared before me, the undersigned authority in and for the said county and state, on this 11th day of OCTOBER, 20 12, within my jurisdiction, the within-named DAVID M. BURCKEL, who acknowledged that
Instrument Signer Name

(he) (she) is manager of POINTE PROPERTIES, LLC, a manager-
Name of Manager-Managed Limited Liability Company

managed limited liability company, and that in said capacity, and for and on behalf of said company, and as its act and deed, (he) (she) executed the above and foregoing instrument, after first having been duly authorized so to do.

STATE OF MISSISSIPPI
STEPHANIE S. MCCRARY
NOTARY PUBLIC
ID No. 51438
Commission Expires
May 16, 2014
LAMAR COUNTY

(SEAL)

Stephanie S McCrary (NOTARY PUBLIC)

My Commission Expires: 5/16/14

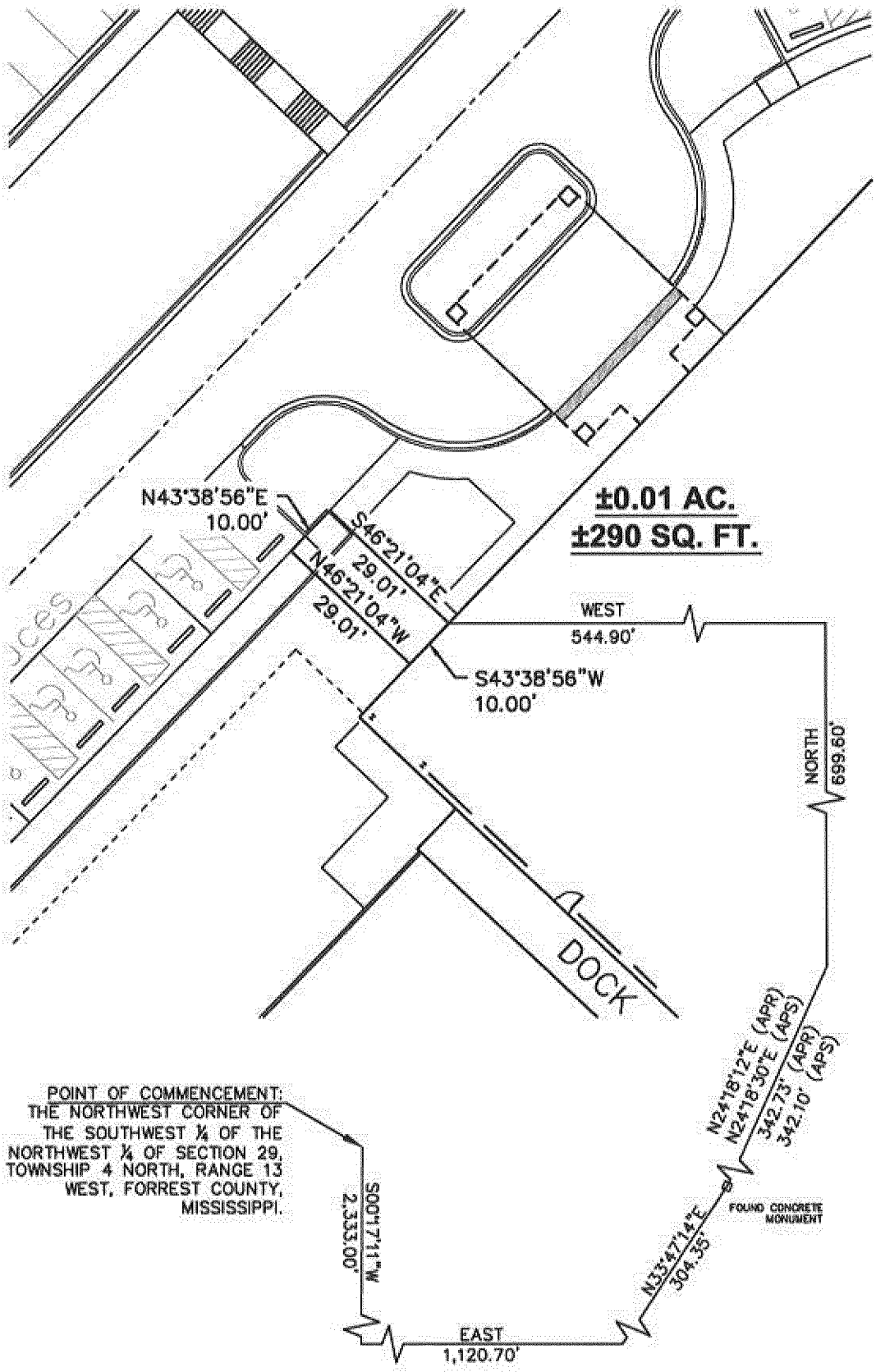

SD&W
SHOWS, DEARMAN & WATTS, INC.
CONSULTING ENGINEERS

G:\PROJECTS\Chris Stokes Collaborative PC\14744 - Orthopedic Institute Design\14744dwg\14744 water meter easement.dwg, Plot, 9/17/2012 9:25:11 AM

City of Hattiesburg, MS

200 Forrest St.
P.O. Box 1898
Hattiesburg, MS 39401

Master

File Number: 2012-1300

File ID:	2012-1300	**Type:**	Regular Agenda Item	**Status:**	Agenda Ready
Version:	1	**Reference:**		**In Control:**	City Council
				File Created:	10/30/2012
Brief Title:	Acknowledge receipt of Final Judgement in Eminent Domain Action No. C012-0328.			**Final Action:**	
				Minute Book Number:	MB2012-1/387

Title:

Acknowledge receipt of fully executed and recorded Judgment from the Forrest County Special Court of Eminent Domain for Civil Action No. C012-0328 related to the acquisition of a Right of Way and Permanent Drainage Easement for the County Tax Parcel No. 2-028I-08-239.00.

Notes: 4th Street Expansion Project Phase I

Sponsors:		**Enactment Date:**	
Attachments:	Judgment C012-0328	**Enactment Number:**	
Contact:		**Meeting Date:**	11/06/2012
Drafter:	Sharon Waits	**Effective Date:**	

History of Legislative File

Version:	Acting Body:	Date:	Action:	Sent To:	Due Date:	Return Date:	Result:
1	City Council	11/06/2012					

Text of Legislative File 2012-1300

Title

Acknowledge receipt of fully executed and recorded Judgment from the Forrest County Special Court of Eminent Domain for Civil Action No. C012-0328 related to the acquisition of a Right of Way and Permanent Drainage Easement for the County Tax Parcel No. 2-028I-08-239.00.

Summary

Acknowledge receipt of fully executed and recorded Judgment from the Forrest County Special Court of Eminent Domain for Civil Action No. C012-0328 related to the acquisition of a Right of Way and Permanent Drainage Easement for the County Tax Parcel No.

2-028I-08-239.00.

Budget Information

Expenditure Type

Purchasing Item

Publication Information

FILED

OCT 16 2012

FORREST COUNTY CIRCUIT CLERK

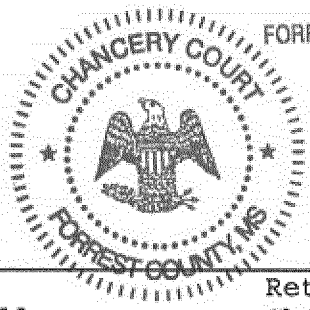

Forrest County
Filed/Recorded OCTOBER 18 2012 03:28:00PM
Witness my hand and seal
Jimmy C. Havard
Chancery Clerk

Prepared by:
Christopher M. Howdeshell
MSB # 10688
Pittman, Howdeshell,
Hinton & Hightower, PLLC
Post Office Drawer 17138
Hattiesburg, MS 39404-7138
Telephone: (601) 264-3314
Facsimile: (601) 261-3411

Return to:
Christopher M. Howdeshell
MSB #10688
Pittman, Howdeshell,
Hinton & Hightower, PLLC
Post Office Drawer 17138
Hattiesburg, MS 39404-7138
Telephone: (601) 264-3314
Facsimile: (601) 261-3311

IN THE SPECIAL COURT OF EMINENT DOMAIN
FORREST COUNTY, MISSISSIPPI

CITY OF HATTIESBURG, MISSISSIPPI,
A MUNICIPAL CORPORATION PLAINTIFF

VERSUS CIVIL ACTION NO. C012-0328

LARRY T. JOHNSON, OWNER;
KIMBERLY R. LENTZ, ESQ.,
CHAPTER 7 BANKRUPTCY TRUSTEE;
MARY KING FERRELL, BENEFICIARY,
TRUSTEE OF THE MARY KING FERRELL TRUST;
JAMES KEARNEY TRAVIS, III, ESQ.,
TRUSTEE OF DEED OF TRUST;
CMB FINANCIAL SERVICES, INC.,
JUDGMENT LIENOR; MISSISSIPPI
DEPARTMENT OF EMPLOYMENT SECURITY, JUDGMENT LIENOR;
MERRITT, INC., SUCCESSOR TO
MERRITT TAX SERVICES, INC., TAX LIENOR;
AND YANKEE INVESTMENTS, LLC, TAX LIENOR DEFENDANTS

AGREED FINAL JUDGMENT

IN THIS CAUSE, Plaintiff, City of Hattiesburg, Mississippi, brought a Complaint and Amended Complaint to Condemn certain

lands of Defendants, being fee simple title to that certain property described in Exhibit "B" attached hereto and incorporated herein, and a permanent drainage easement described in Exhibit "C" attached hereto and incorporated herein; a survey of said property is attached hereto as Exhibit "A" as a guide. The Court finds that service of process was completed according to law and required the above-named Defendants to appear and defend against said Complaint and Amended Complaint on the 24th day of September, 2012, at 9:00 o'clock a.m. Further, the Court notes that Plaintiff herein filed a Motion to Dismiss Certain Party-Defendants and Approve Settlement Agreement in the above-referenced matter, which was properly served on all Defendants and noticed for the same date and time. The Court notes that this matter was called at 9:30 o'clock a.m. on September 24, 2012, approximately one-half hour after the time set forth in the Fiat and as noticed in Plaintiff's Motion and the Court finds that no party appeared to contest Plaintiff's Motion or otherwise make an appearance as to the relief sought in the Complaint and Amended Complaint. The Court, therefore, finds that it has jurisdiction over the parties and the subject matter of this cause; and is advised that Plaintiff herein is being represented by Christopher M. Howdeshell, Esq., and that the Mary King Ferrell Trust is being represented by James Kearney Travis, III, Esq.

Inst. 696706
Bk 1139 Pg 0580

The Court, after hearing argument on the Motion presented by counsel for Plaintiff as to the changes in the title to the property, and reviewing the written Motion, finds that said Motion is well-taken and should be granted; and that Larry T. Johnson, Kimberly R. Lentz, Esq., as Chapter 7 Bankruptcy Trustee, CMB Financial Services, Inc., Mississippi Department of Employment Security, Merritt, Inc., successor to Merritt Tax Services, Inc., and Yankee Investments, LLC, should be dismissed as necessary Party-Defendants in this matter; and that the remaining necessary Party-Defendant herein is Mary King Ferrell, Trustee of the Mary King Ferrell Trust, Beneficiary.

The Court is advised that a compromise settlement has been reached between the remaining parties, fixing total compensation and damages in the amount of $1,600.00 for property described in the Complaint and Amended Complaint, and that all issues before the Court have now been resolved between the parties. The Court, being fully advised in the premises, accepts said settlement agreement, with the parties being bound hereto as if there had been a complete trial by jury and a judgment rendered accordingly.

The Court finds that an Order Granting Plaintiff the Right of Immediate Title and Possession to the property described in Exhibit "B" and Exhibit "C" was signed by the Court on the 2nd day of July, 2012, and that the amount of $1,970.00 was deposited

Inst. 696706
Bk 1139 Pg 0581

with the Clerk of this Court pursuant to said Order; and the Court finds that Plaintiff is hereby given credit for this amount against the amount of this Judgment.

IT IS, THEREFORE, ORDERED AND ADJUDGED, that Larry T. Johnson, Kimberly R. Lentz, Esq., as Chapter 7 Bankruptcy Trustee, CMB Financial Services, Inc., Mississippi Department of Employment Security, Merritt, Inc., successor to Merritt Tax Services, Inc., and Yankee Investments, LLC, are hereby dismissed as necessary Party-Defendants in the above-referenced matter; that the sole remaining necessary Party-Defendant is Mary King Ferrell, Trustee of the Mary King Ferrell Trust.

IT IS, FURTHER, ORDERED AND ADJUDGED, that this Agreed Final Judgment be entered in this cause; that the completion of a trial by jury is waived by all parties; that total compensation and damages due the remaining Defendant, Mary King Ferrell, Trustee of the Mary King Ferrell Trust, is $1,600.00, inclusive of any additional amounts that may be allowed by statute or otherwise; that the Order Granting Plaintiff Right of Immediate Title and Possession dated the 2nd day of July, 2012, is hereby confirmed, and that Plaintiff is given credit for the $1,970.00 deposited in this matter against the amount of the Judgment.

IT IS, FURTHER, ORDERED AND ADJUDGED, that the Clerk shall disburse the sum of $1,600.00 to James Kearney Travis, III, Esq., in trust and for the benefit of Mary King Ferrell, Trustee of the

Inst. 696706
Bk 1139 Pg 0582

Mary King Ferrell Trust, without further order of this Court; that the Clerk is also directed to remit the balance of the funds deposited, $370.00, to Plaintiff herein; that title and possession to the property described in Exhibit "B" and Exhibit "C" attached hereto incorporated herein is hereby confirmed and vested in Plaintiff, and may be appropriated to the public use as prayed for in the Complaint and Amended Complaint; that a certified copy of this Agreed Final Judgment confirming and vesting title to Plaintiff in the lands described in Exhibit "B" and Exhibit "C" shall be recorded in the Land Deed Records of the Chancery Clerk's office of Forrest County, Mississippi; and that the Forrest County Chancery Clerk is hereby authorized and directed to cancel that certain Lis Pendens Notice recorded in Lis Pendens Book 10 at Page 182 (Instrument No. 689514); all costs of Court herein are assessed to Plaintiff, for which execution may issue.

SO ORDERED AND ADJUDGED, this the 11th day of October, 2012.

JUDGE, SPECIAL COURT OF EMINENT DOMAIN

Prepared, Agreed and Submitted to the Court by:

Christopher M. Howdeshell
MSB #10688
Pittman, Howdeshell, Hinton & Hightower, PLLC
Post Office Drawer 17138
Hattiesburg, MS 39404-7138
Telephone: (601) 264-3314

Read and Agreed:

James Kearney Travis, III, Esq.
Counsel for Mary King Ferrell, as Trustee for the Mary King Ferrell Trust

CERTIFIED TRUE COPY
Forrest County, Mississippi
Lou Ellen Adams, Circuit Clerk
This the 18 day of October, 2012
By: D.C.

Inst. 696706
Bk 1139 Pg 0583

Nicholas M. Connolly, PLS No. 2973

PREPARED BY:

SD&W
SHOWS, DEARMAN & WAITS, INC.
CONSULTING ENGINEERS

CLASSIFICATION:
This Survey meets the minimum requirements of the standards for Land Surveyors in Mississippi for Class "B" Surveys as adopted by the State Board of Registration for Professional Engineers and Surveyors.

PREPARED FOR:
CITY OF HATTIESBURG
DEPARTMENT OF PUBLIC SERVICES
P.O. BOX 1898
HATTIESBURG, MISSISSIPPI 39403-1898
PHONE: (601) 545-4540

EXHIBIT "A"

GRAPHIC SCALE

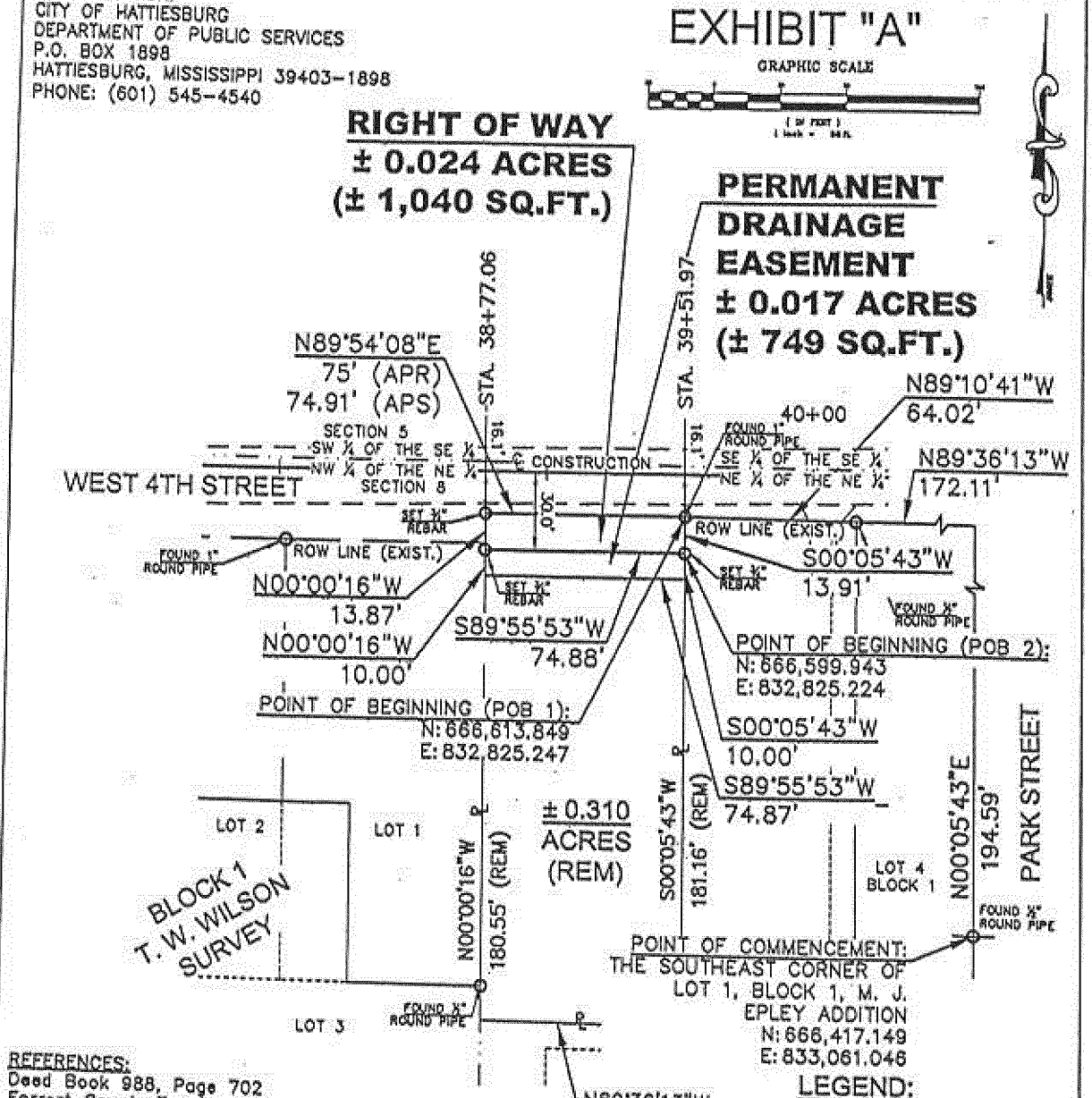

REFERENCES:
Deed Book 988, Page 702
Forrest County Tax Map 281
T. W. Wilson Survey Plat
M. J. Epley Addition Plat

NOTES:
All utilities, utility easements and rights of way, unless otherwise noted, are not shown.

All bearings are based on the North American Datum of 1983, Mississippi East Zone Grid.

LEGEND:

APR	– AS PER RECORD
APS	– AS PER SURVEY
℄	– CENTERLINE
EXIST.	– EXISTING
℘	– PROPERTY LINE
REM	– REMAINING
ROW	– RIGHT OF WAY
SQ. FT.	– SQUARE FEET

SD&W PROJECT NO.: 1235-008	RIGHT-OF-WAY EXHIBIT	PROPERTY OWNER: MARRY KING FERREL TRUST
NORTHEAST 1/4 OF THE NORTHEAST 1/4	WEST 4TH STREET	MARY KING FERRELL, TRUSTEE
SECTION 8, TOWNSHIP 4 NORTH, RANGE 13 WEST	Survey Date: MARCH 19, 2008	PROJECT NO.: HPP-8750-00(003) LPA/104873-801000
FORREST COUNTY	Exhibit Date: OCTOBER 01, 2009	PARCEL NO.: 2-0281-08-239.00

F:\PROJECTS\Hattiesburg_City of\1235-008 - 4th Street ROW\1235-008\Dwg\1235-008_Exhibit_2-0281-08-239.00.dwg, 2-0281-08-239.00, 10/2/2009 3:11:44 PM

EXHIBIT "A"

ALL-STATE LEGAL®

Inst. 696706
Bk 1139 Pg 0584

INDEXING INSTRUCTIONS: Northeast ¼ of the Northeast ¼ of Section 8, Township 4 North, Range 13 West, City of Hattiesburg, Forrest County, Mississippi

The following description is based on the Mississippi State Plane Coordinate System Grid for the East Zone, NAD 83(93), as developed by Shows, Dearman and Waits, Inc. for the Mississippi Department of Transportation project HPP-8750-00(003) LPA/104873-801000.

A part of the Northeast ¼ of the Northeast ¼ of Section 8, Township 4 North, Range 13 West, City of Hattiesburg, County of Forrest, State of Mississippi, and being more particularly described as follows:

- **Commencing** at Found ½" Round Pipe representing the Southeast Corner of Lot 1, Block 1 of the M. J. Epley Addition in the City of Hattiesburg, County of Forrest, State of Mississippi, said point having a Grid value of **N 666,417.149** feet and **E 833,061.046** feet on the above referenced East Zone Grid, said Corner also being a Point on the Western Right of Way Line of Park Street;
- thence run N00°05'43"E along the said Western Right of Way Line for 194.59 feet to the Intersection of said Western Right of Way Line and the Existing Southern Right of Way Line of West 4th Street,
- thence run N89°36'13"W along said Existing Southern Right of Way Line for 172.11 feet,
- thence run N89°10'41"W along said Existing Southern Right of Way Line for 64.02 feet to the Northeast Corner of the Grantor's Property and the **Point of Beginning** and having a Grid value of **N 666,613.849** feet and **E 832,825.247** feet on the above referenced East Zone Grid,
- thence run S00°05'43"W along East Line of the Grantor's Property for 13.91 feet,
- thence run S89°55'53"W for 74.88 feet to a Point on the West Line of the Grantor's Property,
- thence run N00°00'16"W along said West Line for 13.87 feet to a Point on said Existing Southern Right of Way Line,
- thence run N89°54'08"E along said Existing Southern Right of Way Line for 74.91 feet to the Point of Beginning,
- comprising **0.024** Acres, more or less.

Inst. 696706
Bk 1139 Pg 0585

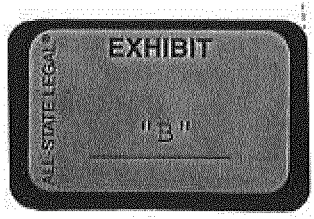

INDEXING INSTRUCTIONS: Northeast ¼ of the Northeast ¼ of Section 8, Township 4 North, Range 13 West, City of Hattiesburg, Forrest County, Mississippi

The following description is based on the Mississippi State Plane Coordinate System Grid for the East Zone, NAD 83(93), as developed by Shows, Dearman and Waits, Inc. for the Mississippi Department of Transportation project HPP-8750-00(003) LPA/104873-801000.

A part of the Northeast ¼ of the Northeast ¼ of Section 8, Township 4 North, Range 13 West, City of Hattiesburg, County of Forrest, State of Mississippi, and being more particularly described as follows:

- **Commencing** at Found ½" Round Pipe representing the Southeast Corner of Lot 1, Block 1 of the M. J. Epley Addition in the City of Hattiesburg, County of Forrest, State of Mississippi, said point having a Grid value of N **666,417.149** feet and **E 833,061.046** feet on the above referenced East Zone Grid, said Corner also being a Point on the Western Right of Way Line of Park Street;
- thence run N00°05'43"E along the said Western Right of Way Line for 194.59 feet to the Intersection of said Western Right of Way Line and the Existing Southern Right of Way Line of West 4th Street,
- thence run N89°36'13"W along said Existing Southern Right of Way Line for 172.11 feet,
- thence run N89°10'41"W along said Existing Southern Right of Way Line for 64.02 feet to the Northeast Corner of the Grantor's Property,
- thence run S00°05'43"W along East Line of the Grantor's Property for 13.91 feet to a Point on the Proposed Southern Right of Way Line of West 4th Street and the **Point of Beginning** and having a Grid value of N **666,599.943** feet and **E 832,825.224** feet on the above referenced East Zone Grid,
- thence continue S00°05'43"W along said East Line for 10.00 feet,
- thence run S89°55'53"W and parallel to the said Proposed Southern Right of Way Line for 74.87 feet to a Point on the West Line of the Grantor's Property,
- thence run N00°00'16"W along said West Line for 10.00 feet to a Point on the said Proposed Southern Right of Way Line,
- thence run N89°55'53"E along said Proposed Southern Right of Way Line for 74.88 feet to the Point of Beginning,
- comprising **0.017** Acres, more or less.

Inst. 696706
Bk 1139 Pg 0586

ALL-STATE LEGAL®
EXHIBIT
"C"

City of Hattiesburg, MS

200 Forrest St.
P.O. Box 1898
Hattiesburg, MS 39401

Master

File Number: 2012-1295

File ID:	2012-1295	**Type:**	Regular Agenda Item	**Status:**	Agenda Ready
Version:	1	**Reference:**		**In Control:**	City Council
				File Created:	10/30/2012
Brief Title:	Acknowledge Receipt of bid on October 18, 2012 for Term Bid Item #10 -Welding Supplies for the Hattiesburg Public Services Department			**Final Action:**	
				Minute Book Number:	MB2012-1/387

Title:

Acknowledge Receipt of bid on October 18, 2012 for Term Bid Item #10 -Welding Supplies for the Hattiesburg Public Services Department for the period beginning November 7, 2012 and accept the bid from Nordan Smith as the only bid received.

Notes:

Sponsors:		**Enactment Date:**	
Attachments:	11-06-Accept PS #10-Welding Supplies-Nordan Smith.pdf	**Enactment Number:**	
Contact:		**Meeting Date:**	11/06/2012
Drafter:		**Effective Date:**	

History of Legislative File

Version:	Acting Body:	Date:	Action:	Sent To:	Due Date:	Return Date:	Result:
1	City Council	11/06/2012					

Text of Legislative File 2012-1295

Title

Acknowledge Receipt of bid on October 18, 2012 for Term Bid Item #10 -Welding Supplies for the Hattiesburg Public Services Department for the period beginning November 7, 2012 and accept the bid from Nordan Smith as the only bid received.

Summary

Acknowledge Receipt of bid on October 18, 2012 for Term Bid Item #10 -Welding Supplies for the Hattiesburg Public Services Department

Mayor
Johnny L. DuPree, Ph.D.

Council - Ward 1	Council - Ward 2	Council - Ward 3	Council - Ward 4	Council - Ward 5
Kim Bradley	*Deborah Denard Delgado*	*Carter Carroll*	*Dave J. Ware, II*	*Henry Naylor*

MEMORANDUM

TO: Mayor and Council

FROM: Verlina Underwood, Purchasing Manager

DATE: October 30, 2012

SUBJECT: Term Bids

After review of the bid received from Nordan Smith on October 18, 2012 for purchases of commodities required in the operation of various departments, it is my recommendation that the following actions be taken in acceptance of bids for the following item:

Item # 10 - Welding Supplies - Accept the bid of Nordan Smith as the only bid received.

Should you have any questions concerning this recommendation, please contact my office.

ITEM #10 - WELDING SUPPLIES FOR THE PUBLIC SERVICES DEPARTMENT

ITEMS	BID PRICE
OXYGEN CYLINDER (CUBIC FT)	5 58 CYL
#5 ACETYLENE CYLINDER (CUBIC FT)	29 82 CCF
CYLINDER RENT PER MONTH	4 24

ACETYLENE RODS	
1/8" X 36" STEEL RODS	.69 LB
1/8" X 36" FLUX COATED BRASS RODS	3 90 LB
1/8" X 36" BARE BRASS RODS	.89 LB
TOTAL	5 48

ARC WELDING RODS	
1/8" TYPE 6011	1.44 LB
5/32" TYPE 6011	1.40 LB
3/16" TYPE 6011	.59 LB
1/8" TYPE 7018	1.44 LB
5/32" TYPE 7018	1.40 LB
3/16" TYPE 7018	.59 LB
5/32" TYPE 7024	.69 LB
3/16" TYPE 7024	.60 LB
TOTAL	8 15

CUTTING & WELDING TIPS FOR:	
VICTOR MODEL CA2460 TORCH AND CUTTING HEAD	4 00 EA

MISCELLANEOUS ITEMS:	
BRAZING FLUX-NUMBER TWO	6 53 LB
WELDING GLOVES-LONG GAUNTLET	2 90 PR
LOTS OF ½ DOZEN	same #
LOTS OF 1 DOZEN	same #
GOGGLES FOR USE WITH GLASSES	3 99 PR
GOGGLES FOR USE WITHOUT GLASSES	3 99 PR
WELDING SHIELD COMP. W/O HELMET ATTACH	11 71 EA
STANDARD CLEAR LENS FOR SHIELDS	.25 EA
STRIKER FLINTS- BOX OF 5	.52 BX
TOTAL	29 89

GRAND TOTAL BID PRICE	82 68

10

Nordan Smith / Airgas
NAME OF COMPANY

5051 Old Hwy 42 / PO Box 1937
STREET/P.O. ADDRESS

Hattiesburg, MS 39401
CITY/STATE & ZIP CODE

601.545.1800 / 601.545.7932
PHONE NUMBER & FAX NUMBER

10/16/12
DATE OF BID

Jeremy Shows - Mgr
OFFICIAL'S NAME & TITLE

Jeremy Shows
OFFICIAL'S SIGNATURE

FILED
OCT 18 2012
EDDIE R. MYERS, CITY CLERK
By _____ Deputy Clerk

City of Hattiesburg, MS

200 Forrest St.
P.O. Box 1898
Hattiesburg, MS 39401

Master

File Number: 2012-1293

File ID:	2012-1293	**Type:**	Regular Agenda Item	**Status:**	Agenda Ready
Version:	1	**Reference:**		**In Control:**	City Council
				File Created:	10/30/2012
Brief Title:	Acknowledge Receipt of unadvertised bids for Fire Administration Office Roof Repair			**Final Action:**	
				Minute Book Number:	MB2012-1/387

Title:

Acknowledge Receipt of unadvertised bids for Fire Administration Office Roof Repair and accept the bid of Eddie Pearson Roofing in the amount of $9,613.62 as the lowest bid received (Unadvertised bids for Construction Project).

Notes:

Sponsors:		**Enactment Date:**	
Attachments:	11-06-Accept Fire Admin Roof Repair (Two Quote).pdf	**Enactment Number:**	
Contact:		**Meeting Date:**	11/06/2012
Drafter:		**Effective Date:**	

History of Legislative File

Version:	Acting Body:	Date:	Action:	Sent To:	Due Date:	Return Date:	Result:
1	City Council	11/06/2012					

Text of Legislative File 2012-1293

Title

Acknowledge Receipt of unadvertised bids for Fire Administration Office Roof Repair and accept the bid of Eddie Pearson Roofing in the amount of $9,613.62 as the lowest bid received (Unadvertised bids for Construction Project).

Summary

Acknowledge Receipt of unadvertised bids for Fire Administration Office Roof Repair

43530

CITY OF HATTIESBURG
QUOTE REQUEST RESPONSE FORM

Page No. 1
Date - 10/17/12
Order Number . . 1875 00

EDDIE PIERSON ROOFING & R
112 CARSON STREET
HATTIESBURG MS 39401

Mail To. . . . . CITY OF HATTIESBURG
PURCHASING DIVISION
220 W FRONT ST.2ND FLOOR
PO BOX 1898
HATTIESBURG MS 39401

PRINTED NAME Eddie Pearson

Phone Number . . 601 5454512

SIGNATURE [signature] DATE 10-17-12

Shipping terms are F.O.B. destination, freight prepaid

PROJECT LINE: FIRE ADMINISTRATION OFFICE ROOF REPAIRS

ITEM DESCRIPTION	Request Date	QTY	UM	$ Unit Price	Extended Cost	Delivery Date	Expired Date
REMOVE EXISTING SHINGLES AND DISPOSE OF IN LANDFIELD. INSTALL NEW 30 YEAR SHINGLE ROOF WITH NEW 30LB. FELT. INSTALL NEW PIPE BOOTS. INSTALL NEW SAW JOINT METAL FLASHING AT WALL AND CHIMNEY. BUILDING PERMIT AND DUMP FEES INCLUDED. SITE CLEAN UP. EXCLUSIONS: MECHANICAL, ELECTRICAL, CARPENTRY, PAINTING, AND ASBESTOS TESTING AND REMOVAL.	10/16/12	1.00	EA	9613.62			

TOTAL BID PRICE $9,613.62

Lowest & Best

Robert Davis

43530

CITY OF HATTIESBURG
QUOTE REQUEST RESPONSE FORM

Page No. 1
Date - 10/17/12
Order Number . . 1875 00

PACE ROOFING
16 TEMPLE RD
PETAL MS 39465-9502

Mail To. . . . . CITY OF HATTIESBURG
PURCHASING DIVISION
220 W FRONT ST.2ND FLOOR
PO BOX 1898
HATTIESBURG MS 39401

PRINTED NAME PACE ROOFING LLC

Phone Number . . 601 5454512

SIGNATURE [signature] DATE 10/18/12 Shipping terms are F.O.B, destination, freight prepaid

PROJECT LINE: FIRE ADMINISTRATION OFFICE ROOF REPAIRS

ITEM DESCRIPTION	Request Date	QTY	UM	Unit Price	Extended Cost	Delivery Date	Expired Date
REMOVE EXISTING SHINGLES AND DISPOSE OF IN LANDFIELD. INSTALL NEW 30 YEAR SHINGLE ROOF WITH NEW 30LB. FELT. INSTALL NEW PIPE BOOTS. INSTALL NEW SAW JOINT METAL FLASHING AT WALL AND CHIMNEY. BUILDING PERMIT AND DUMP FEES INCLUDED. SITE CLEAN UP. EXCLUSIONS: MECHANICAL, ELECTRICAL, CARPENTRY, PAINTING, AND ASBESTOS TESTING AND REMOVAL.	10/16/12	1.00	EA				

TOTAL BID PRICE 11,850.00

City of Hattiesburg, MS

200 Forrest St.
P.O. Box 1898
Hattiesburg, MS 39401

Master

File Number: 2012-1305

File ID:	2012-1305	**Type:**	Regular Agenda Item	**Status:**	Agenda Ready
Version:	1	**Reference:**		**In Control:**	City Council
				File Created:	10/29/2012
Brief Title:	Acknowledge bids received for the COMSWIP Sewer Phase III project, and accept bid from Jay Bearden Construction, Inc.			**Final Action:**	
				Minute Book Number:	MB2012-1/387

Title:

Acknowledge receipt of bids on September 27, 2012 for the Comprehensive Sewer and Water Investment Project - Sewer Phase III (COMSWIP Sewer Phase III) and accept bid from Jay Bearden Construction, Inc. in the amount of $1,632,964.92 as being the lowest and best bid; Authorize Mayor to execute contract for same.

Notes: 094695.7220.01

Sponsors:		**Enactment Date:**	
Attachments:	Bid Tab	**Enactment Number:**	
Contact:		**Meeting Date:**	11/05/2012
Drafter:	Sharon Waits	**Effective Date:**	

History of Legislative File

Version:	Acting Body:	Date:	Action:	Sent To:	Due Date:	Return Date:	Result:
1	City Council	11/06/2012					

Text of Legislative File 2012-1305

Title

Acknowledge receipt of bids on September 27, 2012 for the Comprehensive Sewer and Water Investment Project - Sewer Phase III (COMSWIP Sewer Phase III) and accept bid from Jay Bearden Construction, Inc. in the amount of $1,632,964.92 as being the lowest and best bid; Authorize Mayor to execute contract for same.

Summary

Acknowledge receipt of bids on September 27, 2012 for the Comprehensive Sewer and Water Investment Project - Sewer Phase III (COMSWIP Sewer Phase III) and accept bid

from Jay Bearden Construction, Inc. in the amount of $1,632,964.92 as being the lowest and best bid; Authorize Mayor to execute contract for same.

Budget Information
$1,632,964.92
094695.7220.01

Expenditure Type
Regular Budget Item

Purchasing Item
Sealed Bid

Publication Information

SHOWS, DEARMAN & WAITS, INC.
CONSULTING ENGINEERS
P.O. BOX 1711, 301 SECOND AVENUE
HATTIESBURG, MISSISSIPPI 39403-1711
P: (601) 544-1821 F: (601) 544-0501
HTTP://WWW.SD-W.COM

RAYMOND M. DEARMAN, P.E., R.L.S.
MICHAEL T. WAITS, P.E., R.L.S.
NICHOLAS M. CONNOLLY, P.E., R.L.S.
KYLE D. WALLACE, P.E.
SHEA E. McNEASE, P.E.
JOHN T. WEEKS, P.E.
BENNIE J. SELLERS, P.E., R.L.S.
MARCELIN JOSEPH, E.I.

PAUL J. SHOWS (1996)

September 27, 2012

City of Hattiesburg
P.O. Box 1898
Hattiesburg, MS 39403

Attn: Bert Kuyrkendall

Re: Comprehensive Sewer Improvements Phase III
City of Hattiesburg

Bert:

I have certified the enclosed bid tabulation that represents all bids that were received and opened at 10:00 a.m. on September 27, 2012 for the above referenced project.

I recommend award to the lowest bidder, Jay Bearden Construction, Inc., in the amount of One Milliion, Six-Hundred and Thirty-two, Nine-hundred and Sixty-four dollars and Ninety-two cents ($1,632,964.92).

Enclosed are a copy of the bid from Jay Bearden Construction, Inc. and the original bids from all other bidders.

Should you have any questions or comments, please do not hesitate to call.

Sincerely,

Kyle D. Wallace, P.E.
Project Engineer

/rs

Enclosure

G:\PROJECTS\Hattiesburg_City of\1273-S003 - Comprehensive Sewer Improvements - Phase III\Corres\1273S003_Kuyrkendall_Rec Award.doc

BID TAB
Project: Comprehensive Sewer Improvements Phase III
City of Hattiesburg
Project No. 1273-S003

September 27, 2012

Item No.	Item Description	Quantity	Unit	Jay Bearden Construction, Inc. P.O. Box 180428 Richland, MS 39218		W. R. Mitchell Contractor, Inc. P.O. Box 180637 Mobile, AL 36618		Baird Contracting Co., Inc. 276 Snow Drive Birmingham, AL 35209	
				Unit Price	Amount	Unit Price	Amount	Unit Price	Amount
Site 5 - Mobile Street Area									
1	8" SDR 26 PVC Sewer Pipe (0'-6')	1,298	Lin. Ft.	$36.63	$47,545.74	$26.40	$34,267.20	$52.00	$67,496.00
2	8" SDR 26 PVC Sewer Pipe (6'-8')	1,215	Lin. Ft.	$43.53	$52,888.95	$33.00	$40,095.00	$58.00	$70,470.00
3	8" SDR 26 PVC Sewer Pipe (8'-10')	683	Lin. Ft.	$50.43	$34,443.69	$47.30	$32,305.90	$64.00	$43,712.00
4	8" SDR 26 PVC Sewer Pipe (10'-12')	200	Lin. Ft.	$57.33	$11,466.00	$54.50	$10,900.00	$73.00	$14,600.00
5	15" SDR 26 PVC Sewer Pipe (6'-8')	533	Lin. Ft.	$55.90	$29,794.70	$40.00	$21,320.00	$70.00	$37,310.00
6	15" SDR 26 PVC Sewer Pipe (8'-10')	676	Lin. Ft.	$62.80	$42,452.80	$54.70	$36,977.20	$77.00	$52,052.00
7	15" SDR 26 PVC Sewer Pipe (10'-12')	488	Lin. Ft.	$69.70	$34,013.60	$68.00	$33,184.00	$85.00	$41,480.00
8	15" SDR 26 PVC Sewer Pipe (12'-14')	601	Lin. Ft.	$76.60	$46,036.60	$81.20	$48,801.20	$99.00	$59,499.00
9	Abandonement of Existing Sewer Line	5,478	Lin. Ft.	$4.00	$21,912.00	$7.00	$38,346.00	$4.00	$21,912.00
10	48" Precast Concrete Sewer Manhole (0'-6')	7	Each	$1,737.11	$12,159.77	$1,950.00	$13,650.00	$2,100.00	$14,700.00
11	48" Precast Concrete Sewer Manhole (6'-8')	4	Each	$2,124.66	$8,498.64	$2,170.30	$8,681.20	$2,400.00	$9,600.00
12	48" Precast Concrete Sewer Manhole (8'-10')	2	Each	$2,512.20	$5,024.40	$2,670.00	$5,340.00	$2,700.00	$5,400.00
13	60" Precast Concrete Sewer Manhole (6'-8')	2	Each	$4,138.00	$8,276.00	$3,400.00	$6,800.00	$3,600.00	$7,200.00
14	60" Precast Concrete Sewer Manhole (8'-10')	3	Each	$4,874.00	$14,622.00	$4,160.00	$12,480.00	$4,000.00	$12,000.00
15	60" Precast Concrete Sewer Manhole (10'-12')	3	Each	$5,611.00	$16,833.00	$5,650.00	$16,950.00	$4,500.00	$13,500.00
16	60" Precast Concrete Sewer Manhole (12'-14')	2	Each	$6,347.00	$12,694.00	$6,180.00	$12,360.00	$4,900.00	$9,800.00
17	Demolition and Removal of Existing Manhole	2	Each	$1,000.00	$2,000.00	$780.00	$1,560.00	$1,000.00	$2,000.00
18	Abandonement of Existing Manhole	20	Each	$1,000.00	$20,000.00	$780.00	$15,600.00	$800.00	$16,000.00
19	4" SDR 26 PVC Sewer Pipe for Services (All Depths)	216	Lin. Ft.	$10.52	$2,272.32	$17.00	$3,672.00	$20.00	$4,320.00
20	6" SDR 26 PVC Sewer Pipe for Services (All Depths)	1,884	Lin. Ft.	$14.37	$27,073.08	$18.30	$34,477.20	$21.00	$39,564.00
21	8"x8"x6" PVC Tee	42	Each	$161.00	$6,762.00	$173.00	$7,266.00	$115.00	$4,830.00
22	15"x15"x6" PVC Tee	17	Each	$393.00	$6,681.00	$445.00	$7,565.00	$350.00	$5,950.00
23	6" PVC Cleanout	56	Each	$202.00	$11,312.00	$312.00	$17,472.00	$230.00	$12,880.00
24	Crushed Aggregate (Size 825)	2,629	Ton	$49.50	$130,135.50	$42.00	$110,418.00	$40.00	$105,160.00
25	Select Fill Material (Class 9, Group C), LVM	8,060	Cu. Yd.	$8.00	$64,480.00	$11.20	$90,272.00	$6.00	$48,360.00
26	Concrete Pavement Repair (All Depths)	137	Sq. Yd.	$65.00	$8,905.00	$61.20	$8,384.40	$85.00	$11,645.00
27	Asphalt Pavement Repair (All Depths)	5,832	Sq. Yd.	$32.45	$189,248.40	$25.00	$145,800.00	$23.00	$134,136.00
28	Concrete Curb & Gutter (Match Existing Type)	145	Lin. Ft.	$20.00	$2,900.00	$23.00	$3,335.00	$30.00	$4,350.00
29	Demolition and Removal of Storm Sewer Pipe (All Sizes & Depths)	428	Lin. Ft.	$15.00	$6,420.00	$22.30	$9,544.40	$15.00	$6,420.00
30	10" Reinforced Concrete Pipe, Class III, Rubber Gaskets	32	Lin. Ft.	$29.25	$936.00	$47.00	$1,504.00	$40.00	$1,280.00

BID TAB — September 27, 2012

Project: Comprehensive Sewer Improvements Phase III
City of Hattiesburg
Project No. 1273-S003

Item No.	Item Description	Quantity	Unit	Jay Bearden Construction, Inc. P.O. Box 180428 Richland, MS 39218 Unit Price	Amount	W. R. Mitchell Contractor, Inc. P.O. Box 180637 Mobile, AL 36618 Unit Price	Amount	Baird Contracting Co., Inc. 276 Snow Drive Birmingham, AL 35209 Unit Price	Amount
31	12" Reinforced Concrete Pipe, Class III, Rubber Gaskets	90	Lin. Ft.	$29.25	$2,632.50	$47.00	$4,230.00	$40.00	$3,600.00
32	15" Reinforced Concrete Pipe, Class III, Rubber Gaskets	178	Lin. Ft.	$33.50	$5,963.00	$47.00	$8,366.00	$44.00	$7,832.00
33	18" Reinforced Concrete Pipe, Class III, Rubber Gaskets	32	Lin. Ft.	$37.50	$1,200.00	$62.00	$1,984.00	$45.00	$1,440.00
34	24" Reinforced Concrete Pipe, Class III, Rubber Gaskets	32	Lin. Ft.	$51.50	$1,648.00	$79.00	$2,528.00	$56.00	$1,792.00
35	22"x13" Reinforced Concrete Arch Pipe, Class III, Flexible Plastic Gaskets	32	Lin. Ft.	$57.50	$1,840.00	$66.00	$2,112.00	$56.00	$1,792.00
36	29"x18" Reinforced Concrete Arch Pipe, Class III, Flexible Plastic Gaskets	64	Lin. Ft.	$64.50	$4,128.00	$86.00	$5,504.00	$64.00	$4,096.00
37	36"x23" Reinforced Concrete Arch Pipe, Class III, Flexible Plastic Gaskets	12	Lin. Ft.	$90.61	$1,087.32	$109.00	$1,308.00	$77.00	$924.00
38	Class "B" Concrete, Minor Structures	10	Cu. Yd.	$1,200.00	$12,000.00	$950.00	$9,500.00	$400.00	$4,000.00
39	Grassing	1	Lump Sum	$5,000.00	$5,000.00	$5,000.00	$5,000.00	$17,000.00	$17,000.00
40	Erosion Control	1	Lump Sum	$10,000.00	$10,000.00	$5,000.00	$5,000.00	$10,000.00	$10,000.00
41	Mobilization	1	Lump Sum	$54,000.00	$54,000.00	$105,600.00	$105,600.00	$100,000.00	$100,000.00
42	Maintenance of Traffic	1	Lump Sum	$20,000.00	$20,000.00	$70,000.00	$70,000.00	$70,000.00	$70,000.00
			Subtotal (Site 5):		**$997,286.01**		**$1,050,459.70**		**$1,100,102.00**
Site 7 - East 8th Street									
1	8" SDR 26 PVC Sewer Pipe (0'-6')	40	Lin. Ft.	$36.63	$1,465.20	$34.90	$1,396.00	$52.00	$2,080.00
2	8" SDR 26 PVC Sewer Pipe (6'-8')	44	Lin. Ft.	$43.53	$1,915.32	$39.30	$1,729.20	$58.00	$2,552.00
3	8" SDR 26 PVC Sewer Pipe (8'-10')	841	Lin. Ft.	$50.43	$42,411.63	$42.50	$35,742.50	$64.00	$53,824.00
4	8" SDR 26 PVC Sewer Pipe (10'-12')	927	Lin. Ft.	$57.33	$53,144.91	$45.65	$42,317.55	$73.00	$67,671.00
5	Abandonement of Existing Sewer Line	2,305	Lin. Ft.	$4.00	$9,220.00	$5.00	$11,525.00	$4.00	$9,220.00
6	48" Precast Concrete Sewer Manhole (0'-6')	2	Each	$1,737.11	$3,474.22	$2,150.00	$4,300.00	$2,100.00	$4,200.00
7	48" Precast Concrete Sewer Manhole (6'-8')	3	Each	$2,124.66	$6,373.98	$2,400.00	$7,200.00	$2,400.00	$7,200.00
8	48" Precast Concrete Sewer Manhole (8'-10')	4	Each	$2,512.20	$10,048.80	$3,010.00	$12,040.00	$2,700.00	$10,800.00
9	48" Precast Concrete Sewer Manhole (10'-12')	3	Each	$2,900.00	$8,700.00	$3,310.00	$9,930.00	$3,000.00	$9,000.00
10	Drop Manhole Assembly (All Depths)	1	Each	$1,500.00	$1,500.00	$742.00	$742.00	$1,300.00	$1,300.00

BID TAB — September 27, 2012

Project: Comprehensive Sewer Improvements Phase III
City of Hattiesburg
Project No. 1273-S003

Item No.	Item Description	Quantity	Unit	Jay Bearden Construction, Inc. P.O. Box 180428 Richland, MS 39218 Unit Price	Amount	W. R. Mitchell Contractor, Inc. P.O. Box 180637 Mobile, AL 36618 Unit Price	Amount	Baird Contracting Co., Inc. 276 Snow Drive Birmingham, AL 35209 Unit Price	Amount
11	Demolition and Removal of Existing Manhole	2	Each	$1,200.00	$2,400.00	$1,608.00	$3,216.00	$1,000.00	$2,000.00
12	Abandonement of Existing Manhole	10	Each	$1,000.00	$10,000.00	$1,475.00	$14,750.00	$800.00	$8,000.00
13	Abandonement of Existing Pump Station	1	Lump Sum	$15,000.00	$15,000.00	$1,480.00	$1,480.00	$7,000.00	$7,000.00
14	4" SDR 26 PVC Sewer Pipe for Services (All Depths)	144	Lin. Ft.	$10.50	$1,512.00	$17.95	$2,584.80	$20.00	$2,880.00
15	6" SDR 26 PVC Sewer Pipe for Services (All Depths)	1,062	Lin. Ft.	$14.50	$15,399.00	$19.80	$21,027.60	$21.00	$22,302.00
16	8"x8"x6" PVC Tee	36	Each	$161.00	$5,796.00	$136.00	$4,896.00	$115.00	$4,140.00
17	6" PVC Cleanout	36	Each	$202.00	$7,272.00	$154.00	$5,544.00	$230.00	$8,280.00
18	Crushed Aggregate (Size 825)	1,001	Ton	$49.50	$49,549.50	$42.00	$42,042.00	$40.00	$40,040.00
19	Select Fill Material (Class 9, Group C), LVM	3,068	Cu. Yd.	$8.00	$24,544.00	$11.20	$34,361.60	$6.00	$18,408.00
20	Concrete Pavement Repair (All Depths)	9	Sq. Yd.	$112.00	$1,008.00	$62.00	$558.00	$85.00	$765.00
21	Asphalt Pavement Repair (All Depths)	2,263	Sq. Yd.	$32.45	$73,434.35	$25.00	$56,575.00	$23.00	$52,049.00
22	Concrete Curb & Gutter (Match Existing Type)	95	Lin. Ft.	$25.00	$2,375.00	$23.00	$2,185.00	$30.00	$2,850.00
23	Demolition and Removal of Storm Sewer Pipe (All Sizes & Depths)	64	Lin. Ft.	$15.00	$960.00	$23.00	$1,472.00	$15.00	$960.00
24	29"x18" Reinforced Concrete Arch Pipe, Class III, Flexible Plastic Gaskets	32	Lin. Ft.	$64.50	$2,064.00	$86.00	$2,752.00	$64.00	$2,048.00
25	29"x18" Reinforced Concrete Arch Pipe, Flared End Section, Class III	1	Each	$1,006.00	$1,006.00	$1,100.00	$1,100.00	$900.00	$900.00
26	Class "B" Concrete, Minor Structures	1	Cu. Yd.	$2,000.00	$2,000.00	$950.00	$950.00	$400.00	$400.00
27	Grassing	1	Lump Sum	$5,000.00	$5,000.00	$3,340.00	$3,340.00	$8,000.00	$8,000.00
28	Erosion Control	1	Lump Sum	$10,000.00	$10,000.00	$1,670.00	$1,670.00	$5,000.00	$5,000.00
29	Mobilization	1	Lump Sum	$43,000.00	$43,000.00	$46,700.00	$46,700.00	$15,000.00	$15,000.00
30	Maintenance of Traffic	1	Lump Sum	$20,000.00	$20,000.00	$25,600.00	$25,600.00	$5,000.00	$5,000.00
			Subtotal (Site 7):		**$430,573.91**		**$399,726.25**		**$373,869.00**
Site 8 - Bore under NS Railroad at East 4th Street									
1	21" DI Sewer Pipe (0'-6')	24	Lin. Ft.	$145.00	$3,480.00	$154.00	$3,696.00	$220.00	$5,280.00
2	24" DI Sewer Pipe (0'-6')	246	Lin. Ft.	$145.00	$35,670.00	$178.00	$43,788.00	$200.00	$49,200.00
3	36" Steel Casing (0.532" WT) (Bored) (Incl: Insurance Bond for Railways)	200	Lin. Ft.	$532.00	$106,400.00	$450.00	$90,000.00	$425.00	$85,000.00

BID TAB — September 27, 2012

Project: Comprehensive Sewer Improvements Phase III
City of Hattiesburg
Project No. 1273-S003

Item No.	Item Description	Quantity	Unit	Jay Bearden Construction, Inc. P.O. Box 180428 Richland, MS 39218 Unit Price	Amount	W. R. Mitchell Contractor, Inc. P.O. Box 180637 Mobile, AL 36618 Unit Price	Amount	Baird Contracting Co., Inc. 276 Snow Drive Birmingham, AL 35209 Unit Price	Amount
4	Abandonement of Existing Sewer Line	250	Lin. Ft.	$10.00	$2,500.00	$12.00	$3,000.00	$25.00	$6,250.00
5	72" Precast Concrete Sewer Manhole (6'-8')	1	Each	$6,205.00	$6,205.00	$6,290.00	$6,290.00	$4,100.00	$4,100.00
6	72" Precast Concrete Sewer Manhole (8'-10')	2	Each	$6,550.00	$13,100.00	$7,620.00	$15,240.00	$4,800.00	$9,600.00
7	Abandonement of Existing Manhole	1	Each	$1,000.00	$1,000.00	$1,670.00	$1,670.00	$800.00	$800.00
8	Clearing and Grubbing	1	Lump Sum	$10,000.00	$10,000.00	$3,340.00	$3,340.00	$5,000.00	$5,000.00
9	Grouted RipRap (Size 300) w/ Geotextile Fabric	30	Sq. Yd.	$125.00	$3,750.00	$100.00	$3,000.00	$60.00	$1,800.00
10	Grassing	1	Lump Sum	$5,000.00	$5,000.00	$1,670.00	$1,670.00	$5,000.00	$5,000.00
11	Erosion Control	1	Lump Sum	$10,000.00	$10,000.00	$1,670.00	$1,670.00	$2,000.00	$2,000.00
12	Mobilization	1	Lump Sum	$8,000.00	$8,000.00	$21,120.00	$21,120.00	$6,000.00	$6,000.00
			Subtotal (Site8):		**$205,105.00**		**$194,484.00**		**$180,030.00**
			Total Bid:		**$1,632,964.92**		**$1,644,669.95**		**$1,654,001.00**

BID TAB
Project: Comprehensive Sewer Improvements Phase III
City of Hattiesburg
Project No. 1273-S003

September 27, 2012

Nordan Contracting Co., Inc.
P.O. Box 336
Saraland, AL 36571

Item No.	Item Description	Quantity	Unit	Unit Price	Amount
Site 5 - Mobile Street Area					
1	8" SDR 26 PVC Sewer Pipe (0'-6')	1,298	Lin. Ft.	$37.45	$48,610.10
2	8" SDR 26 PVC Sewer Pipe (6'-8')	1,215	Lin. Ft.	$45.45	$55,221.75
3	8" SDR 26 PVC Sewer Pipe (8'-10')	683	Lin. Ft.	$51.45	$35,140.35
4	8" SDR 26 PVC Sewer Pipe (10'-12')	200	Lin. Ft.	$63.45	$12,690.00
5	15" SDR 26 PVC Sewer Pipe (6'-8')	533	Lin. Ft.	$63.65	$33,925.45
6	15" SDR 26 PVC Sewer Pipe (8'-10')	676	Lin. Ft.	$69.65	$47,083.40
7	15" SDR 26 PVC Sewer Pipe (10'-12')	488	Lin. Ft.	$77.65	$37,893.20
8	15" SDR 26 PVC Sewer Pipe (12'-14')	601	Lin. Ft.	$91.65	$55,081.65
9	Abandonement of Existing Sewer Line	5,478	Lin. Ft.	$3.40	$18,625.20
10	48" Precast Concrete Sewer Manhole (0'-6')	7	Each	$1,767.00	$12,369.00
11	48" Precast Concrete Sewer Manhole (6'-8')	4	Each	$1,908.00	$7,632.00
12	48" Precast Concrete Sewer Manhole (8'-10')	2	Each	$2,249.00	$4,498.00
13	60" Precast Concrete Sewer Manhole (6'-8')	2	Each	$3,165.00	$6,330.00
14	60" Precast Concrete Sewer Manhole (8'-10')	3	Each	$3,763.00	$11,289.00
15	60" Precast Concrete Sewer Manhole (10'-12')	3	Each	$4,510.00	$13,530.00
16	60" Precast Concrete Sewer Manhole (12'-14')	2	Each	$5,458.00	$10,916.00
17	Demolition and Removal of Existing Manhole	2	Each	$700.00	$1,400.00
18	Abandonement of Existing Manhole	20	Each	$350.00	$7,000.00
19	4" SDR 26 PVC Sewer Pipe for Services (All Depths)	216	Lin. Ft.	$31.11	$6,719.76
20	6" SDR 26 PVC Sewer Pipe for Services (All Depths)	1,884	Lin. Ft.	$32.27	$60,796.68
21	8"x8"x6" PVC Tee	42	Each	$119.20	$5,006.40
22	15"x15"x6" PVC Tee	17	Each	$388.40	$6,602.80
23	6" PVC Cleanout	56	Each	$217.60	$12,185.60
24	Crushed Aggregate (Size 825)	2,629	Ton	$46.00	$120,934.00
25	Select Fill Material (Class 9, Group C), LVM	8,060	Cu. Yd.	$12.60	$101,556.00
26	Concrete Pavement Repair (All Depths)	137	Sq. Yd.	$69.00	$9,453.00
27	Asphalt Pavement Repair (All Depths)	5,832	Sq. Yd.	$22.30	$130,053.60
28	Concrete Curb & Gutter (Match Existing Type)	145	Lin. Ft.	$20.00	$2,900.00
29	Demolition and Removal of Storm Sewer Pipe (All Sizes & Depths)	428	Lin. Ft.	$15.00	$6,420.00
30	10" Reinforced Concrete Pipe, Class III, Rubber Gaskets	32	Lin. Ft.	$40.43	$1,293.76

BID TAB		September 27, 2012		Nordan Contracting Co., Inc.	
Project:	Comprehensive Sewer Improvements Phase III			P.O. Box 336	
	City of Hattiesburg			Saraland, AL 36571	
Project No. 1273-S003					

Item No.	Item Description	Quantity	Unit	Unit Price	Amount
31	12" Reinforced Concrete Pipe, Class III, Rubber Gaskets	90	Lin. Ft.	$40.43	$3,638.70
32	15" Reinforced Concrete Pipe, Class III, Rubber Gaskets	178	Lin. Ft.	$42.25	$7,520.50
33	18" Reinforced Concrete Pipe, Class III, Rubber Gaskets	32	Lin. Ft.	$55.00	$1,760.00
34	24" Reinforced Concrete Pipe, Class III, Rubber Gaskets	32	Lin. Ft.	$64.58	$2,066.56
35	22"x13" Reinforced Concrete Arch Pipe, Class III, Flexible Plastic Gaskets	32	Lin. Ft.	$52.59	$1,682.88
36	29"x18" Reinforced Concrete Arch Pipe, Class III, Flexible Plastic Gaskets	64	Lin. Ft.	$69.14	$4,424.96
37	36"x23" Reinforced Concrete Arch Pipe, Class III, Flexible Plastic Gaskets	12	Lin. Ft.	$85.40	$1,024.80
38	Class "B" Concrete, Minor Structures	10	Cu. Yd.	$275.00	$2,750.00
39	Grassing	1	Lump Sum	$3,600.00	$3,600.00
40	Erosion Control	1	Lump Sum	$8,000.00	$8,000.00
41	Mobilization	1	Lump Sum	$30,000.00	$30,000.00
42	Maintenance of Traffic	1	Lump Sum	$10,000.00	$10,000.00
			Subtotal (Site 5):		**$959,625.10**

Site 7 - East 8th Street					
1	8" SDR 26 PVC Sewer Pipe (0'-6')	40	Lin. Ft.	$37.45	$1,498.00
2	8" SDR 26 PVC Sewer Pipe (6'-8')	44	Lin. Ft.	$37.45	$1,647.80
3	8" SDR 26 PVC Sewer Pipe (8'-10')	841	Lin. Ft.	$51.45	$43,269.45
4	8" SDR 26 PVC Sewer Pipe (10'-12')	927	Lin. Ft.	$63.45	$58,818.15
5	Abandonement of Existing Sewer Line	2,305	Lin. Ft.	$3.40	$7,837.00
6	48" Precast Concrete Sewer Manhole (0'-6')	2	Each	$1,767.00	$3,534.00
7	48" Precast Concrete Sewer Manhole (6'-8')	3	Each	$1,908.00	$5,724.00
8	48" Precast Concrete Sewer Manhole (8'-10')	4	Each	$2,249.00	$8,996.00
9	48" Precast Concrete Sewer Manhole (10'-12')	3	Each	$2,890.00	$8,670.00
10	Drop Manhole Assembly (All Depths)	1	Each	$2,133.00	$2,133.00

BID TAB		September 27, 2012		Nordan Contracting Co., Inc.	
Project:	Comprehensive Sewer Improvements Phase III			P.O. Box 336	
	City of Hattiesburg			Saraland, AL 36571	
Project No. 1273-S003					

Item No.	Item Description	Quantity	Unit	Unit Price	Amount
11	Demolition and Removal of Existing Manhole	2	Each	$700.00	$1,400.00
12	Abandonement of Existing Manhole	10	Each	$350.00	$3,500.00
13	Abandonement of Existing Pump Station	1	Lump Sum	$5,978.00	$5,978.00
14	4" SDR 26 PVC Sewer Pipe for Services (All Depths)	144	Lin. Ft.	$31.11	$4,479.84
15	6" SDR 26 PVC Sewer Pipe for Services (All Depths)	1,062	Lin. Ft.	$32.27	$34,270.74
16	8"x8"x6" PVC Tee	36	Each	$119.20	$4,291.20
17	6" PVC Cleanout	36	Each	$217.60	$7,833.60
18	Crushed Aggregate (Size 825)	1,001	Ton	$46.00	$46,046.00
19	Select Fill Material (Class 9, Group C), LVM	3,068	Cu. Yd.	$12.60	$38,656.80
20	Concrete Pavement Repair (All Depths)	9	Sq. Yd.	$69.00	$621.00
21	Asphalt Pavement Repair (All Depths)	2,263	Sq. Yd.	$22.30	$50,464.90
22	Concrete Curb & Gutter (Match Existing Type)	95	Lin. Ft.	$20.00	$1,900.00
23	Demolition and Removal of Storm Sewer Pipe (All Sizes & Depths)	64	Lin. Ft.	$15.00	$960.00
24	29"x18" Reinforced Concrete Arch Pipe, Class III, Flexible Plastic Gaskets	32	Lin. Ft.	$69.14	$2,212.48
25	29"x18" Reinforced Concrete Arch Pipe, Flared End Section, Class III	1	Each	$713.00	$713.00
26	Class "B" Concrete, Minor Structures	1	Cu. Yd.	$275.00	$275.00
27	Grassing	1	Lump Sum	$3,600.00	$3,600.00
28	Erosion Control	1	Lump Sum	$8,000.00	$8,000.00
29	Mobilization	1	Lump Sum	$30,000.00	$30,000.00
30	Maintenance of Traffic	1	Lump Sum	$10,000.00	$10,000.00
			Subtotal (Site 7):		**$397,329.96**

Site 8 - Bore under NS Railroad at East 4th Street					
1	21" DI Sewer Pipe (0'-6')	24	Lin. Ft.	$171.00	$4,104.00
2	24" DI Sewer Pipe (0'-6')	246	Lin. Ft.	$171.00	$42,066.00
3	36" Steel Casing (0.532" WT) (Bored) (Incl: Insurance Bond for Railways)	200	Lin. Ft.	$1,225.00	$245,000.00

BID TAB		September 27, 2012		Nordan Contracting Co., Inc. P.O. Box 336 Saraland, AL 36571	
Project:	Comprehensive Sewer Improvements Phase III City of Hattiesburg				
Project No. 1273-S003					
Item No.	**Item Description**	**Quantity**	**Unit**	**Unit Price**	**Amount**
4	Abandonement of Existing Sewer Line	250	Lin. Ft.	$47.80	$11,950.00
5	72" Precast Concrete Sewer Manhole (6'-8')	1	Each	$10,917.00	$10,917.00
6	72" Precast Concrete Sewer Manhole (8'-10')	2	Each	$11,806.00	$23,612.00
7	Abandonement of Existing Manhole	1	Each	$850.00	$850.00
8	Clearing and Grubbing	1	Lump Sum	$9,000.00	$9,000.00
9	Grouted RipRap (Size 300) w/ Geotextile Fabric	30	Sq. Yd.	$192.00	$5,760.00
10	Grassing	1	Lump Sum	$4,000.00	$4,000.00
11	Erosion Control	1	Lump Sum	$7,000.00	$7,000.00
12	Mobilization	1	Lump Sum	$52,000.00	$52,000.00
			Subtotal (Site8):		**$416,259.00**
			Total Bid:		**$1,773,214.06**

This is to certify that I have checked the tabulation of the bids received by the City of Hattiesburg on September 27, 2012 at 10:00 a.m., and that said tabulation is true and correct to the best of my belief.

Kyle D. Wallace, P.E.

City of Hattiesburg, MS

200 Forrest St.
P.O. Box 1898
Hattiesburg, MS 39401

Master

File Number: 2012-1296

File ID:	2012-1296	**Type:**	Regular Agenda Item	**Status:**	Agenda Ready
Version:	1	**Reference:**		**In Control:**	City Council
				File Created:	10/30/2012
Brief Title:	Acknowledge bids received on October 25, 2012 for the 4th Street Improvements Project, and accept bid from Warren Paving, Inc.			**Final Action:**	
				Minute Book Number:	MB2012-1/387

Title:

Acknowledge receipt of bids on October 25, 2012 for the 4th Street Roadway Improvements Project Phase I (Project No. HPP-8750-00(003) LPA 104873-801000) and accept bid from Warren Paving, Inc. in the amount of $3,432,046.62 as being the lowest and best bid received, subject to the concurrence of the Mississippi Department of Transportation (MDOT); Authorize Mayor to execute contract for same.

Notes: 072201.7230.08
MDOT Grant

Sponsors:		**Enactment Date:**	
Attachments:	Award Letter Signed (3), Certified Bid Tab (3)	**Enactment Number:**	
Contact:		**Meeting Date:**	11/06/2012
Drafter:	Sharon Waits	**Effective Date:**	

History of Legislative File

Version:	Acting Body:	Date:	Action:	Sent To:	Due Date:	Return Date:	Result:
1	City Council	11/06/2012					

Text of Legislative File 2012-1296

Title

Acknowledge receipt of bids on October 25, 2012 for the 4th Street Roadway Improvements Project Phase I (Project No. HPP-8750-00(003) LPA 104873-801000) and accept bid from Warren Paving, Inc. in the amount of $3,432,046.62 as being the lowest and best bid received, subject to the concurrence of the Mississippi Department of Transportation (MDOT); Authorize Mayor to execute contract for same.

Summary

Acknowledge receipt of bids on October 25, 2012 for the 4th Street Roadway Improvements Project Phase I (Project No. HPP-8750-00(003) LPA 104873-801000) and accept bid from Warren Paving, Inc. in the amount of $3,432,046.62 as being the lowest and best bid received, subject to the concurrence of the Mississippi Department of Transportation (MDOT); Authorize Mayor to execute contract for same.

Budget Information

$3,432,046.62
MDOT Grant
072201.7230.08

Expenditure Type

MDOT Grant

Purchasing Item

Sealed Bid

Publication Information

NEEL-SCHAFFER
Solutions you can build upon

engineers
planners
surveyors
environmental scientists
landscape architects

October 29, 2012
N-S Project No. 6646-01

Honorable Johnny L. DuPree, Ph.D.
City of Hattiesburg
P.O. Box 1898
Hattiesburg, Mississippi 39403-1898

REFERENCE: FOURTH STREET ROADWAY IMPROVEMENTS PROJECT
MDOT PROJECT NO. HPP 8750-00(003) LPA/104873-801000
CITY OF HATTIESBURG, MS

Dear Mayor DuPree:

Enclosed for your records are one (1) original and two (2) copies of the Certified Bid Tabulation for the bids received for the referenced project. As you are aware there were five bids submitted, opened and read at the bid opening on October 25, 2012. Upon review and tabulation of the bids received and opened, the bid of Warren Paving, Inc., in the amount of $3,432,046.62 was determined to be the apparent low bidder.

Neel-Schaffer therefore recommends that the City of Hattiesburg review the bid submitted by Warren Paving, Inc., and award the project, subject to the concurrence of the Mississippi Department of Transportation (MDOT), to the best and lowest bidder.

Sincerely,

NEEL-SCHAFFER, INC.

Geoffrey Crosby

Geoffrey Crosby, P.E.
Project Engineer

Enclosures

Post Office Box 1487 •Hattiesburg, MS 39403-1487 •601.545.1565 • Fax 601.545.2267

City of Hattiesburg

Project No. HPP 8750-00(003) LPA/104873-801000

Fourth Street Roadway Improvements Project

Participating Items				Engineers Estimate		T L Wallace P.O. Box 523 Columbia, MS 39429		Warren, Inc. P O Box 572 Hattiesburg, MS 39403		TCB Construction Co., Inc. 5913 Highway 53 Poplarville, MS 39470		Walters Construction Co., Inc. 2051 Highway 84 East Laurel, MS 39443		Dunn Roadbuilders, LLC P.O. Box 6560 Laurel, MS 39441-6560	
Item Code	Pay Item Description	Unit	Estimated Quantity	Unit Price	Item Total	Unit Price	Item Total	Unit Price	Item Total	Unit Price	Item Total	Unit Price	Item Total	Unit Price	Item Total
201-A001	CLEARING AND GRUBBING	LS	1	$15,000.00	$15,000.00	$22,000.00	$22,000.00	$38,630.00	$38,630.00	$28,737.50	$28,737.50	$16,285.00	$16,285.00	$34,000.00	$34,000.00
202-A001	REMOVAL OF OBSTRUCTIONS	LS	1	$10,000.00	$10,000.00	$9,390.00	$9,390.00	$2,865.00	$2,865.00	$17,242.50	$17,242.50	$25,140.00	$25,140.00	$24,000.00	$24,000.00
202-B005	REMOVAL OF ASPHALT PAVEMENT, ALL DEPTHS	SY	7954	$4.50	$35,793.00	$3.15	$25,055.10	$1.51	$12,010.54	$2.93	$23,305.22	$7.10	$56,473.40	$6.30	$50,110.20
202-B030	REMOVAL OF CONCRETE PAVEMENT, ALL DEPTHS	SY	3060	$6.00	$18,360.00	$14.55	$44,523.00	$2.67	$8,170.20	$4.60	$14,076.00	$7.50	$22,950.00	$7.25	$22,185.00
202-B035	REMOVAL OF CONCRETE SIDEWALK	SY	40	$14.00	$560.00	$15.15	$606.00	$3.33	$133.20	$4.02	$160.80	$5.70	$228.00	$5.50	$220.00
202-B038	REMOVAL OF CURBS, ALL TYPES	LF	586	$6.00	$3,516.00	$4.25	$2,490.50	$1.37	$802.82	$11.50	$6,739.00	$3.15	$1,845.90	$2.75	$1,611.50
202-B057	REMOVAL OF INLETS, ALL SIZES	EACH	16	$500.00	$8,000.00	$237.00	$3,792.00	$74.08	$1,185.28	$172.43	$2,758.88	$522.80	$8,364.80	$495.00	$7,920.00
202-B064	REMOVAL OF PIPE, 8" AND ABOVE	LF	2000	$8.00	$16,000.00	$6.15	$12,300.00	$2.67	$5,340.00	$11.50	$23,000.00	$9.50	$19,000.00	$9.00	$18,000.00
203-A003	UNCLASSIFIED EXCAVATION, FM, AH	CY	2500	$7.00	$17,500.00	$7.80	$19,500.00	$10.93	$27,325.00	$5.75	$14,375.00	$11.50	$28,750.00	$12.00	$30,000.00
203-D002	MUCK EXCAVATION, LVM	CY	100	$9.00	$900.00	$9.50	$950.00	$10.86	$1,086.00	$6.32	$632.00	$20.40	$2,040.00	$18.50	$1,850.00
203-EX038	BORROW EXCAVATION, AH, FME, CLASS B7-6	CY	6600	$15.00	$99,000.00	$15.30	$100,980.00	$13.56	$89,496.00	$24.83	$163,878.00	$13.20	$87,120.00	$12.00	$79,200.00
203-G003	EXCESS EXCAVATION, FM, AH	CY	7150	$6.00	$42,900.00	$12.55	$89,732.50	$10.35	$74,002.50	$9.77	$69,855.50	$10.40	$74,360.00	$10.00	$71,500.00
206-A001	STRUCTURE EXCAVATION	CY	4058	$9.00	$36,522.00	$25.80	$104,696.40	$12.04	$48,858.32	$6.32	$25,646.56	$11.30	$45,855.40	$8.20	$33,275.60
209-A004	GEOTEXTILE STABILIZATION, TYPE V, NON-WOVEN	SY	12050	$2.50	$30,125.00	$1.90	$22,895.00	$4.94	$59,527.00	$1.62	$19,521.00	$2.45	$29,522.50	$2.30	$27,715.00
211-B001	TOPSOIL FOR SLOPE TREATMENT, CONTRACTOR FURNISHED	CY	1500	$4.50	$6,750.00	$22.20	$33,300.00	$15.29	$22,935.00	$22.99	$34,485.00	$18.00	$27,000.00	$15.20	$22,800.00
212-D001	TOPSOIL FOR PLANT PITS, CONTRACTOR FURNISHED	CY	185	$4.50	$832.50	$36.00	$6,660.00	$25.00	$4,625.00	$26.44	$4,891.40	$34.30	$6,345.50	$42.00	$7,770.00
212-B001	STANDARD GROUND PREPARATION	SY	5328	$0.75	$3,996.00	$0.63	$3,356.64	$0.25	$1,332.00	$0.29	$1,545.12	$0.95	$5,061.60	$0.30	$1,598.40
907-213-A001	AGRICULTURAL LIMESTONE	TON	4	$200.00	$800.00	$135.00	$540.00	$200.00	$800.00	$229.90	$919.60	$1,142.70	$4,570.80	$215.00	$860.00
213-B003	COMBINATION FERTILIZER, 8-24-24	TON	1	$800.00	$800.00	$860.00	$860.00	$300.00	$300.00	$344.85	$344.85	$1,142.70	$1,142.70	$1,100.00	$1,100.00
216-B001	SOLID SODDING, CENTIPEDE	SY	5328	$4.00	$21,312.00	$4.75	$25,308.00	$4.10	$21,844.80	$4.71	$25,094.88	$4.55	$24,242.40	$4.40	$23,443.20
219-A001	WATERING	KGAL	1150	$20.00	$23,000.00	$20.00	$23,000.00	$20.00	$23,000.00	$20.00	$23,000.00	$20.00	$23,000.00	$20.00	$23,000.00
220-A001	INSECT PEST CONTROL	ACRE	2	$300.00	$600.00	$40.00	$80.00	$200.00	$400.00	$574.75	$1,149.50	$285.70	$571.40	$43.00	$86.00
230-A044	SHRUB PLANTING, PARSONS JUNIPER	EACH	2610	$10.00	$26,100.00	$7.10	$18,531.00	$6.75	$17,617.50	$5.17	$13,493.70	$6.05	$15,790.50	$9.20	$24,012.00
230-B040	TREE PLANTING, SAVANNAH HOLLY	EACH	54	$125.00	$6,750.00	$168.00	$9,072.00	$160.00	$8,640.00	$126.45	$6,828.30	$165.70	$8,947.80	$190.00	$10,260.00
230-B087	TREE PLANTING, CRAPE MYRTLE 'SIOUX'	EACH	93	$125.00	$11,625.00	$185.00	$17,205.00	$175.00	$16,275.00	$114.95	$10,690.35	$154.25	$14,345.25	$167.00	$15,531.00
907-230-D001	BED PREPARATION	SF	10800	$0.90	$9,720.00	$0.95	$10,260.00	$0.90	$9,720.00	$0.86	$9,288.00	$0.20	$2,160.00	$0.85	$9,180.00
232-A003	FERTILIZER FOR WOODY PLANT MATERIAL, TABLET, 10 G	K	2	$400.00	$800.00	$510.00	$1,020.00	$485.00	$970.00	$287.38	$574.76	$100.00	$200.00	$230.00	$460.00
234-A001	TEMPORARY SILT FENCE	LF	3610	$4.00	$14,440.00	$1.95	$7,039.50	$3.45	$12,454.50	$2.30	$8,303.00	$2.05	$7,400.50	$2.00	$7,220.00
907-237-A001	WATTLES	LF	2000	$5.00	$10,000.00	$6.05	$12,100.00	$7.49	$14,980.00	$4.60	$9,200.00	$4.60	$9,200.00	$4.30	$8,600.00
907-246-A001	SANDBAGS	LF	2000	$5.00	$10,000.00	$5.00	$10,000.00	$7.70	$15,400.00	$1.15	$2,300.00	$1.15	$2,300.00	$1.05	$2,100.00
907-258-PP	HANDRAIL, PER PLANS	LF	360	$75.00	$27,000.00	$53.00	$19,080.00	$74.57	$26,845.20	$80.47	$28,969.20	$80.00	$28,800.00	$75.00	$27,000.00
907-258-PP	HEADWALL, PER PLANS	LS	1	$5,000.00	$5,000.00	$4,340.00	$4,340.00	$6,504.89	$6,504.89	$5,517.60	$5,517.60	$6,060.00	$6,060.00	$5,726.00	$5,726.00
907-304-G001	SIZE 825B CRUSHED STONE BASE, AEA	CY	3100	$65.00	$201,500.00	$85.55	$265,205.00	$60.44	$187,364.00	$71.27	$220,937.00	$83.50	$258,850.00	$61.50	$190,650.00
907-403-A006	HOT MIX ASPHALT, MT, 12.5-MM MIXTURE	TON	1850	$95.00	$175,750.00	$92.45	$171,032.50	$79.33	$146,760.50	$99.03	$183,205.50	$92.00	$170,200.00	$102.00	$188,700.00
907-403-A007	HOT MIX ASPHALT, MT, 19-MM MIXTURE	TON	2200	$95.00	$209,000.00	$92.30	$203,060.00	$73.60	$161,920.00	$91.90	$202,180.00	$88.00	$193,600.00	$83.00	$182,600.00
907-403-A010	HOT MIX ASPHALT, MT, 9.5-MM MIXTURE	TON	1900	$95.00	$180,500.00	$92.75	$176,225.00	$85.93	$163,267.00	$107.31	$203,889.00	$89.40	$169,860.00	$109.00	$207,100.00
907-403-B004	HOT MIX ASPHALT, MT, 12.5-MM MIXTURE, LEVELING	TON	5950	$95.00	$565,250.00	$92.05	$547,697.50	$74.75	$444,762.50	$93.34	$555,373.00	$85.45	$508,427.50		$0.00
OR							$0.00		$0.00		$0.00		$0.00		$0.00
907-403-M002	WARM MIX ASPHALT, MT, 12.5-MM MIXTURE	TON	1850	$95.00	$175,750.00		$0.00		$0.00		$0.00		$0.00		$0.00
907-403-M007	WARM MIX ASPHALT, MT, 19-MM MIXTURE	TON	2200	$95.00	$209,000.00		$0.00		$0.00		$0.00		$0.00		$0.00
907-403-M006	WARM MIX ASPHALT, MT, 9.5-MM MIXTURE	TON	1900	$95.00	$180,500.00		$0.00		$0.00		$0.00		$0.00		$0.00
907-403-N006	WARM MIX ASPHALT, MT, 12.5-MM MIXTURE, LEVELING	TON	5950	$95.00	$565,250.00		$0.00		$0.00		$0.00		$0.00	$102.00	$606,900.00
406-A001	COLD MILLING OF BITUMINOUS PAVEMENT, ALL DEPTHS	SY	1400	$4.00	$5,600.00	$5.25	$7,350.00	$2.00	$2,800.00	$6.90	$9,660.00	$12.30	$17,220.00	$4.50	$6,300.00
907-407-A001	ASPHALT FOR TACK COAT	GAL	2000	$2.50	$5,000.00	$2.80	$5,600.00	$3.03	$6,060.00	$3.79	$7,580.00	$6.00	$12,000.00	$4.00	$8,000.00
907-601-B003	CLASS "B" STRUCTURAL CONCRETE, MINOR STRUCTURES	CY	210	$1,000.00	$210,000.00	$1,300.00	$273,000.00	$985.81	$207,020.10	$1,092.03	$229,326.30	$648.20	$136,122.00	$615.00	$129,150.00
602-A001	REINFORCING STEEL	LBS	17500	$0.90	$15,750.00	$1.10	$19,250.00	$1.15	$20,125.00	**$1.06**	**$18,550.00** 1	$0.65	$11,375.00	$0.60	$10,500.00
603-B002	4" CAST IRON PIPE, CLASS I	LF	200	$25.00	$5,000.00	$27.50	$5,500.00	$25.28	$5,056.00	$29.83	$5,966.00	$28.65	$5,730.00	$27.00	$5,400.00
603-CA087	12" REINFORCED CONCRETE PIPE, CLASS III	LF	16	$40.00	$640.00	$37.70	$603.20	$33.39	$534.24	$32.03	$512.48	$58.85	$941.60	$56.00	$896.00
603-CA088	18" REINFORCED CONCRETE PIPE, CLASS III, RUBBER TYPE GASKETS	LF	473	$50.00	$23,650.00	$30.35	$14,355.55	$23.90	$11,304.70	$39.19	$18,536.87	$40.25	$19,038.25	$38.00	$17,974.00
603-CA089	24" REINFORCED CONCRETE PIPE, CLASS III, RUBBER TYPE GASKETS	LF	224	$60.00	$13,440.00	$39.30	$8,803.20	$32.24	$7,221.76	$46.55	$10,427.20	$49.40	$11,065.60	$46.00	$10,304.00
603-CA090	30" REINFORCED CONCRETE PIPE, CLASS III, RUBBER TYPE GASKETS	LF	211	$80.00	$16,880.00	$51.35	$10,834.85	$43.11	$9,096.21	$55.23	$11,653.53	$68.50	$14,453.50	$63.00	$13,293.00
603-CA092	42" REINFORCED CONCRETE PIPE, CLASS III, RUBBER TYPE GASKETS	LF	78	$120.00	$9,360.00	$78.40	$6,115.20	$67.20	$5,241.60	$73.99	$5,771.22	$93.90	$7,324.20	$86.00	$6,708.00
603-CA129	15" REINFORCED CONCRETE PIPE, CLASS III, RUBBER TYPE GASKETS	LF	38	$45.00	$1,710.00	$28.90	$1,098.20	$23.61	$897.18	$23.98	$911.24	$42.30	$1,607.40	$38.00	$1,444.00
603-CB005	42" REINFORCED CONCRETE END SECTION	EACH	2	$1,600.00	$3,200.00	$1,510.00	$3,020.00	$978.89	$1,957.78	$1,274.90	$2,549.80	$1,986.00	$3,972.00	$1,900.00	$3,800.00
603-CE039	22"x13" CONCRETE ARCH PIPE, CLASS A III, FLEXIBLE TYPE GASKETS	LF	999	$48.00	$47,952.00	$40.25	$40,209.75	$32.22	$32,187.78	$45.14	$45,094.86	$52.85	$52,797.15	$50.00	$49,950.00
603-CE040	51"x31" CONCRETE ARCH PIPE, CLASS A III, FLEXIBLE TYPE GASKETS	LF	164	$150.00	$24,600.00	$106.00	$17,384.00	$75.96	$12,457.44	$90.31	$14,810.84	$117.60	$19,286.40	$109.00	$17,876.00
603-CE041	29"x18" CONCRETE ARCH PIPE, CLASS A III, FLEXIBLE TYPE GASKETS	LF	953	$58.00	$55,274.00	$48.00	$45,744.00	$37.20	$35,451.60	$49.01	$46,706.53	$63.55	$60,563.15	$60.00	$57,180.00
603-CF001	22"x13" CONCRETE ARCH PIPE END SECTION	EACH	1	$650.00	$650.00	$573.00	$573.00	$392.96	$392.96	$627.00	$627.00	$786.10	$786.10	$743.00	$743.00
907-603-PE205	18" CORRUGATED POLYETHYLENE PIPE	LF	1928	$40.00	$77,120.00	$19.50	$37,596.00	$25.12	$48,431.36	$61.76	$119,073.28	$30.90	$59,575.20	$29.00	$55,912.00
907-603-PE206	24" CORRUGATED POLYETHYLENE PIPE	LF	340	$45.00	$15,300.00	$30.20	$10,268.00	$34.07	$11,583.80	$117.64	$39,997.60	$40.60	$13,804.00	$38.00	$12,920.00
907-603-PE207	30" CORRUGATED POLYETHYLENE PIPE	LF	867	$50.00	$43,350.00	$39.35	$34,116.45	$45.50	$39,448.50	$136.67	$118,492.89	$59.15	$51,283.05	$55.00	$47,685.00
907-603-PP	15" BRANCH CONNECTION, STUB INTO 51"x31" CONCRETE ARCH PIPE	EACH	2	$600.00	$1,200.00	$552.00	$1,104.00	$2,056.01	$4,112.02	$2,299.00	$4,598.00	$1,116.95	$2,233.90	$1,050.00	$2,100.00
907-603-PP	24" PREFORMED POLYETHYLENE DRAINAGE CATCH BASIN	EACH	3	$1,600.00	$4,800.00	$3,750.00	$11,250.00	$1,222.00	$3,666.00	$3,370.13	$10,110.39	$1,844.55	$5,533.65	$2,120.00	$6,360.00
604-A001	CASTINGS	LBS	5256	$3.00	$15,768.00	$2.25	$11,826.00	$2.01	$10,564.56	$3.22	$16,924.32	$2.00	$10,512.00	$1.90	$9,986.40
604-B001	GRATINGS	LBS	1500	$4.00	$6,000.00	$3.25	$4,875.00	$2.01	$3,015.00	$4.02	$6,030.00	$3.30	$4,950.00	$3.00	$4,500.00
907-604-PP	TRENCH DRAIN, PER PLANS	LF	342	$100.00	$34,200.00	$208.00	$71,136.00	$225.00	$76,950.00	$262.66	$89,829.72	$287.35	$98,273.70	$414.00	$141,588.00

City of Hattiesburg

Project No. HPP 8750-00(003) LPA/104873-801000

Fourth Street Roadway Improvements Project

Participating Items

Item Code	Pay Item Description	Unit	Estimated Quantity	Engineers Estimate Unit Price	Engineers Estimate Item Total	T L Wallace, P.O. Box 523, Columbia, MS 39429 Unit Price	T L Wallace Item Total	Warren, Inc., P O Box 572, Hattiesburg, MS 39403 Unit Price	Warren, Inc. Item Total	TCB Construction Co., Inc., 5913 Highway 53, Poplarville, MS 39470 Unit Price	TCB Construction Co., Inc. Item Total	Walters Construction Co., Inc., 2051 Highway 84 East, Laurel, MS 39443 Unit Price	Walters Construction Co., Inc. Item Total	Dunn Roadbuilders, LLC, P.O. Box 6560, Laurel, MS 39441-6560 Unit Price	Dunn Roadbuilders, LLC Item Total
608-A001	CONCRETE SIDEWALK, WITHOUT REINFORCEMENT	SY	2441	$35.00	$85,435.00	$28.40	$69,324.40	$41.65	$101,667.65	$32.70	$79,820.70	$32.50	$79,332.50	$30.00	$73,230.00
609-B001	CONCRETE CURB, HEADER	LF	706	$20.00	$14,120.00	$17.30	$12,213.80	$15.10	$10,660.60	$24.14	$17,042.84	$24.00	$16,944.00	$23.00	$16,238.00
609-D008	COMBINATION CONCRETE CURB AND GUTTER, TYPE 3A	LF	6221	$19.00	$118,199.00	$14.25	$88,649.25	$14.33	$89,146.93	$15.12	$94,061.52	$15.35	$95,492.35	$14.50	$90,204.50
609-D009	COMBINATION CONCRETE CURB AND GUTTER, TYPE 3B	LF	6910	$19.00	$131,290.00	$15.85	$109,523.50	$14.33	$99,020.30	$15.12	$104,479.20	$15.05	$103,995.50	$14.25	$98,467.50
613-D005	ADJUSTMENT OF MANHOLES	EACH	14	$500.00	$7,000.00	$298.00	$4,172.00	$391.96	$5,487.44	$287.38	$4,023.32	$1,371.25	$19,197.50	$210.00	$2,940.00
614-B002	CONCRETE DRIVEWAY, WITH REINFORCEMENT, 6-INCH THICKNESS	SY	2575	$50.00	$128,750.00	$46.30	$119,222.50	$41.10	$105,832.50	$48.85	$125,788.75	$48.55	$125,016.25	$46.00	$118,450.00
616-A002	CONCRETE MEDIAN AND/OR ISLAND PAVEMENT, 6-INCH THICKNESS	SY	155	$65.00	$10,075.00	$38.55	$5,975.25	$38.00	$5,890.00	$51.73	$8,018.15	$51.40	$7,967.00	$49.00	$7,595.00
907-616-C003	COLORED AND IMPRINTED CONCRETE MEDIAN AND/OR ISLAND PAVEMENT. 10-INCH THICKNESS	SY	92	$125.00	$11,500.00	$94.70	$8,712.40	$135.00	$12,420.00	$137.94	$12,690.48	$137.15	$12,617.80	$130.00	$11,960.00
618-A001	MAINTENANCE OF TRAFFIC	LS	1	$130,000.00	$130,000.00	$51,000.00	$51,000.00	$96,000.00	$96,000.00	$51,727.50	$51,727.50	$161,270.00	$161,270.00	$45,700.00	$45,700.00
618-B001	ADDITIONAL CONSTRUCTION SIGNS	SF	1	$10.00	$10.00	$10.00	$10.00	$10.00	$10.00	$10.00	$10.00	$10.00	$10.00	$10.00	$10.00
620-A001	MOBILIZATION	LS	1	$190,000.00	$190,000.00	$225,000.00	$225,000.00	$310,000.00	$310,000.00	$217,046.50	$217,046.50	$193,960.00	$193,960.00	$195,000.00	$195,000.00
630-A001	STANDARD ROADSIDE SIGNS, SHEET ALUMINUM, 0.080" THICKNESS	SF	303	$24.00	$7,272.00	$15.80	$4,787.40	$15.00	$4,545.00	$17.24	$5,223.72	$19.70	$5,969.10	$16.00	$4,848.00
630-A002	STANDARD ROADSIDE SIGNS, SHEET ALUMINUM, 0.125" THICKNESS	SF	9	$30.00	$270.00	$26.30	$236.70	$25.00	$225.00	$28.74	$258.66	$23.25	$209.25	$27.00	$243.00
630-C004	STEEL U-SECTION POSTS, 3.0 TO 3.5 LB/FT	LF	607	$12.00	$7,284.00	$5.25	$3,186.75	$5.00	$3,035.00	$5.75	$3,490.25	$3.95	$2,397.65	$5.50	$3,338.50
699-A001	ROADWAY CONSTRUCTION STAKES	LS	1	$50,000.00	$50,000.00	$38,000.00	$38,000.00	$43,457.66	$43,457.66	$59,659.05	$59,659.05	$101,413.60	$101,413.60	$39,000.00	$39,000.00
809-A002	MODULAR RETAINING WALL SYSTEM	SF	1000	$50.00	$50,000.00	$29.45	$29,450.00	$28.00	$28,000.00	$32.19	$32,190.00	$32.00	$32,000.00	$40.00	$40,000.00
815-B001	GROUTED RIPRAP	SY	80	$80.00	$6,400.00	$57.30	$4,584.00	$92.45	$7,396.00	$47.13	$3,770.40	$157.15	$12,572.00	$81.00	$6,480.00
815-E001	GEOTEXTILE UNDER GROUTED RIPRAP, TYPE V, NON-WOVEN	SY	80	$4.00	$320.00	$3.50	$280.00	$2.93	$234.40	$2.30	$184.00	$2.45	$196.00	$2.15	$172.00
907-626-D004	6" THERMOPLASTIC TRAFFIC STRIPE, SKIP YELLOW	LF	2900	$1.25	$3,625.00	$0.55	$1,595.00	$0.50	$1,450.00	$0.57	$1,653.00	$0.50	$1,450.00	$0.55	$1,595.00
907-626-E003	6" THERMOPLASTIC TRAFFIC STRIPE, CONTINUOUS YELLOW	LF	6031	$1.25	$7,538.75	$0.55	$3,317.05	$0.50	$3,015.50	$0.57	$3,437.67	$0.75	$4,523.25	$0.55	$3,317.05
907-626-G004	THERMOPLASTIC DETAIL STRIPE, WHITE	LF	778	$2.25	$1,750.50	$1.05	$816.90	$1.00	$778.00	$1.15	$894.70	$1.45	$1,128.10	$1.10	$855.80
907-626-G005	THERMOPLASTIC DETAIL STRIPE, YELLOW	LF	654	$2.25	$1,471.50	$1.05	$686.70	$1.00	$654.00	$1.15	$752.10	$1.45	$948.30	$1.10	$719.40
907-626-H004	THERMOPLASTIC LEGEND, WHITE	LF	4055	$2.25	$9,123.75	$1.05	$4,257.75	$1.00	$4,055.00	$1.15	$4,663.25	$2.90	$11,759.50	$1.10	$4,460.50
907-626-H005	THERMOPLASTIC LEGEND, WHITE	SY	643	$6.00	$3,858.00	$0.60	$385.80	$5.00	$3,215.00	$0.63	$405.09	$5.70	$3,665.10	$0.60	$385.80
627-K001	RED-CLEAR REFLECTIVE HIGH PERFORMANCE RAISED MARKERS	EACH	30	$8.00	$240.00	$4.20	$126.00	$4.00	$120.00	$4.60	$138.00	$9.15	$274.50	$4.30	$129.00
627-L001	TWO-WAY YELLOW REFLECTIVE HIGH PERFORMANCE RAISED MARKERS	EACH	147	$6.00	$882.00	$4.20	$617.40	$4.00	$588.00	$4.60	$676.20	$9.15	$1,345.05	$4.30	$632.10
907-265-A007	8" C900 PVC WATERLINE	LF	900	$25.00	$22,500.00	$19.25	$17,325.00	$32.69	$29,421.00	$26.81	$24,129.00	$18.45	$16,605.00	$17.50	$15,750.00
907-265-A008	6" C900 PVC WATERLINE	LF	500	$18.00	$9,000.00	$16.20	$8,100.00	$26.92	$13,460.00	$21.26	$10,630.00	$14.60	$7,300.00	$13.75	$6,875.00
907-265-C002	DUCTILE IRON FITTINGS	LBS	8200	$5.00	$41,000.00	$5.15	$42,230.00	$6.12	$50,184.00	$5.43	$44,526.00	$7.00	$57,400.00	$6.60	$54,120.00
907-265-F001	FIRE HYDRANT ASSEMBLY	EACH	9	$3,000.00	$27,000.00	$2,530.00	$22,770.00	$3,141.36	$28,272.24	$2,967.80	$26,710.20	$3,500.00	$31,500.00	$3,300.00	$29,700.00
907-265-K007	8" LINE STOP	EACH	3	$10,000.00	$30,000.00	$6,320.00	$18,960.00	$5,924.80	$17,774.40	$6,761.15	$20,283.45	$9,276.00	$27,828.00	$8,800.00	$26,400.00
907-265-K008	6" LINE STOP	EACH	2	$10,000.00	$20,000.00	$5,260.00	$10,520.00	$5,152.00	$10,304.00	$5,904.25	$11,808.50	$8,260.00	$16,520.00	$7,800.00	$15,600.00
907-265-M001	WATER METER RELOCATION	EACH	55	$900.00	$49,500.00	$378.00	$20,790.00	$473.10	$26,020.50	$485.93	$26,726.15	$606.35	$33,349.25	$575.00	$31,625.00
	Sub-Total / Participating Items				**$3,657,560.00**		**$3,592,320.59**		**$3,346,065.46**		**$3,792,766.14** 2		**$3,712,615.35**		**$3,534,894.45**

Non-Participating Items

Item Code	Pay Item Description	Unit	Estimated Quantity	Engineers Estimate Unit Price	Engineers Estimate Item Total	T L Wallace Unit Price	T L Wallace Item Total	Warren, Inc. Unit Price	Warren, Inc. Item Total	TCB Construction Co., Inc. Unit Price	TCB Construction Co., Inc. Item Total	Walters Construction Co., Inc. Unit Price	Walters Construction Co., Inc. Item Total	Dunn Roadbuilders, LLC Unit Price	Dunn Roadbuilders, LLC Item Total
907-624-A	2" DR-18 PVC WATER LINE (OPEN CUT – ALL DEPTHS)	LF	30	6	$180.00	12.05	$361.50	13.75	$412.50	6.79	$203.70	24.55	$736.50	23	$690.00
907-624-B	8" DR-18 PVC WATER LINE (OPEN CUT – ALL DEPTHS)	LF	1020	$18.00	$18,360.00	$19.25	$19,635.00	$32.69	$33,343.80	$26.81	$27,346.20	$18.45	$18,819.00	$17.50	$17,850.00
907-624-C	16" STEEL CASING, 0.25" WT (OPEN CUT - ALL DEPTHS)	LF	220	$40.00	$8,800.00	$53.85	$11,847.00	$110.39	$24,285.80	$83.08	$18,277.60	$74.65	$16,423.00	$70.00	$15,400.00
907-624-D	CONNECT EXISTING 2" WL TO PROPOSED 8" WL (HOT TAP W/ VALVE & OTHER FITTINGS)	EACH	1	$800.00	$800.00	$532.00	$532.00	$1,063.53	$1,063.53	$752.40	$752.40	$1,374.00	$1,374.00	$1,300.00	$1,300.00
907-624-E	CONNECT PROPOSED 8" WL TO EXISTING 6" WL (W/ TEE & OTHER FITTINGS)	EACH	1	$1,300.00	$1,300.00	$1,100.00	$1,100.00	$1,369.83	$1,369.83	$3,845.60	$3,845.60	$1,313.10	$1,313.10	$1,250.00	$1,250.00
907-624-F	CONNECT PROPOSED 8" WL TO EXISTING 8" WL (HOT TAP W/ VALVE & OTHER FITTINGS)	EACH	1	$1,800.00	$1,800.00	$2,340.00	$2,340.00	$6,638.60	$6,638.60	$4,075.50	$4,075.50	$3,905.60	$3,905.60	$3,700.00	$3,700.00
907-624-G	CONNECT PROPOSED 8" WL TO PROPOSED 8" WL (W/ TEE & OTHER FITTINGS)	EACH	1	$1,400.00	$1,400.00	$1,120.00	$1,120.00	$1,152.94	$1,152.94	$4,075.50	$4,075.50	$1,434.30	$1,434.30	$1,360.00	$1,360.00
907-624-H	DISCONNECT AND CAP EXISTING 2" WL	EACH	1	$500.00	$500.00	$110.00	$110.00	$560.62	$560.62	$161.98	$161.98	$633.15	$633.15	$590.00	$590.00
907-624-I	6" GATE VALVE	EACH	1	$750.00	$750.00	$650.00	$650.00	$757.06	$757.06	$681.86	$681.86	$1,069.60	$1,069.60	$1,000.00	$1,000.00
907-624-J	8" GATE VALVE	EACH	4	$1,100.00	$4,400.00	$945.00	$3,780.00	$1,107.37	$4,429.48	$974.46	$3,897.84	$1,358.80	$5,435.20	$1,300.00	$5,200.00
907-624-K	3-WAY FIRE HYDRANT W/ APPURT. (INCL. TEE, 90 DEG BEND, PIPE, VALVE, HYDRANT, ETC.)	EACH	3	$3,000.00	$9,000.00	$2,530.00	$7,590.00	$3,200.50	$9,601.50	$3,176.80	$9,530.40	$3,500.00	$10,500.00	$3,300.00	$9,900.00
907-624-L	RECONNECT EXISTING SERVICE (INCL. SADDLE, SERVICE TUBE & CORP. STOP)	EACH	5	$160.00	$800.00	$371.00	$1,855.00	$473.10	$2,365.50	$381.43	$1,907.15	$606.40	$3,032.00	$575.00	$2,875.00
	Sub-Total / Non-Participating Items				**$48,090.00**		**$50,920.50**		**$85,981.16**		**$74,755.73**		**$64,675.45**		**$61,115.00**
Total Base Bid					**$3,705,650.00**		**$3,643,241.09**		**$3,432,046.62**		**$3,867,521.87** 3		**$3,777,290.80**		**$3,596,009.45**

1. *Incorrect unit price extension - bid proposal reflected $19,075.00*
2. *Incorrect total base-bid for participating items - bid proposal reflected $3,793,291.14*
3. *Incorrect total base-bid for participating items - bid proposal reflected $3,868,046.87*

I certify this is a true and accurate tabulation of bids received at 10:00 A.M., local time, October 25th, 2012 for the City of Hattiesburg Fourth Street Roadway Improvements Project.

This the 29th day of October 2012

GEOFFREY PAUL CROSS
LICENSED PROFESSIONAL ENGINEER
19984
STATE OF MISSISSIPPI

Mississippi Registration No. 19984

City of Hattiesburg, MS

200 Forrest St.
P.O. Box 1898
Hattiesburg, MS 39401

Master

File Number: 2012-1302

File ID:	2012-1302	**Type:**	Regular Agenda Item	**Status:**	Agenda Ready
Version:	1	**Reference:**		**In Control:**	City Council
				File Created:	10/30/2012
Brief Title:	Approve Plans and Specifications for the Water System Expansion on Veterans Memorial Blvd, and authorize advertisement for bids.			**Final Action:**	
				Minute Book Number:	MB2012-1/387

Title:

Approve plans and specifications for the Water System Expansion on Veterans Memorial Boulevard; Authorize Advertisement for Bids for same.

Notes: Advertise on 11/10/12 & 11/17/12

Sponsors:		**Enactment Date:**	
Attachments:	1270_Advertisement for Bids, executed 1270_Advertisement for Bids, 1270_Signed Specs, 1270_Wtr_Plns_2012-10-24_Signed	**Enactment Number:**	
Contact:		**Meeting Date:**	11/06/2012
Drafter:	Sharon Waits	**Effective Date:**	

History of Legislative File

Version:	Acting Body:	Date:	Action:	Sent To:	Due Date:	Return Date:	Result:
1	City Council	11/06/2012					

Text of Legislative File 2012-1302

Title

Approve plans and specifications for the Water System Expansion on Veterans Memorial Boulevard; Authorize Advertisement for Bids for same.

Summary

Approve plans and specifications for the Water System Expansion on Veterans Memorial Boulevard; Authorize Advertisement for Bids for same.

Budget Information

Expenditure Type

Purchasing Item

Publication Information

ADVERTISEMENT for BIDS

NOTICE is hereby given that the Mayor and Council at the City of Hattiesburg, Mississippi, will receive sealed bids until **10:00 a.m. on December 13, 2012 ,** in the City Clerk's office at the City Hall of said city for furnishing the city's requirement for the following:

WATER SYSTEM EXPANSION
on VETERAN'S MEMORIAL BOULEVARD

CITY of HATIESBURG, MISSISSIPPI

Plans, specifications and proposal forms may be obtained from Shows, Dearman & Waits, Inc., P. O. Box 1711, 301 Second Avenue , Hattiesburg, Mississippi, 39403, upon a non-refundable deposit of $100.00. All bids must be accompanied by a bid security equal to five percent (5%) of the amount of the bid in the form of a certified check, cashiers check, or a bid bond written by a company properly licensed in Mississippi.

The successful bidder will be required to furnish a payment bond and performance bond written by a company licensed in Mississippi. The bonds will be in the amount equal to One Hundred Percent (100%) of the contract amount.

Each bid must be received in a sealed envelope which is marked in the lower left-hand corner EXACTLY as follows:

Bid:
WATER SYSTEM EXPANSION
on VETERAN'S MEMORIAL BOULEVARD

CITY of HATTIESBURG, MISSISSIPPI

BID OPENING TIME: 10:00 a.m.
DATE of BID OPENING: December 13, 2012__

No bid may be withdrawn for a period of sixty (60) days. The owner reserves the right to reject any or all bids received and to waive informalities.

The lowest and best proposal received will be accepted, subject to the provisions of Section 31-7-14 of the Mississippi Code of 1972, annotated and amended, and other applicable state law; but the council reserves the right to reject any or all proposals received and to waive informalities.

PUBLISHED by Order of the Council on the _____day of _____, A.D., 20__.

CITY of HATTIESBURG

BY:_____
Eddie Myers, City Clerk

PUBLISH: November 10, 2012
Nobember 17, 2012

ADVERTISEMENT for BIDS

NOTICE is hereby given that the Mayor and Council at the City of Hattiesburg, Mississippi, will receive sealed bids until **10:00 a.m. on December 13, 2012,** in the City Clerk's office at the City Hall of said city for furnishing the city's requirement for the following:

WATER SYSTEM EXPANSION
on VETERAN'S MEMORIAL BOULEVARD

CITY of HATIESBURG, MISSISSIPPI

Plans, specifications and proposal forms may be obtained from Shows, Dearman & Waits, Inc., P. O. Box 1711, 301 Second Avenue , Hattiesburg, Mississippi, 39403, upon a non-refundable deposit of $100.00. All bids must be accompanied by a bid security equal to five percent (5%) of the amount of the bid in the form of a certified check, cashiers check, or a bid bond written by a company properly licensed in Mississippi.

The successful bidder will be required to furnish a payment bond and performance bond written by a company licensed in Mississippi. The bonds will be in the amount equal to One Hundred Percent (100%) of the contract amount.

Each bid must be received in a sealed envelope which is marked in the lower left-hand corner EXACTLY as follows:

Bid:
WATER SYSTEM EXPANSION
on VETERAN'S MEMORIAL BOULEVARD

CITY of HATTIESBURG, MISSISSIPPI

BID OPENING TIME: 10:00 a.m.
DATE of BID OPENING: December 13, 2012

No bid may be withdrawn for a period of sixty (60) days. The owner reserves the right to reject any or all bids received and to waive informalities.

The lowest and best proposal received will be accepted, subject to the provisions of Section 31-7-14 of the Mississippi Code of 1972, annotated and amended, and other applicable state law; but the council reserves the right to reject any or all proposals received and to waive informalities.

PUBLISHED by Order of the Council on the _____day of _____, A.D., 20__.

CITY of HATTIESBURG

BY: Eddie P. Myers
Eddie Myers, City Clerk

PUBLISH: November 10, 2012
November 17, 2012

SPECIFICATIONS
and
CONTRACT DOCUMENTS

for

WATER SYSTEM EXPANSION on VETERAN'S MEMORIAL BOULEVARD

City of Hattiesburg

HATTIESBURG , MISSISSIPPI

October 2012

KYLE D. WALLACE
REGISTERED PROFESSIONAL ENGINEER
12693
10/24/2012
STATE OF MISSISSIPPI

Prepared by:

SHOWS, DEARMAN & WAITS, Inc.
Consulting Engineers

P O Box 1711 ◆ Hattiesburg MS 39403
(601) 544-1821 ◆ (601) 544-0501 Fax
www.sd-w.com

TABLE of CONTENTS

Page

ADVERTISEMENT for BIDS 1
INSTRUCTIONS to BIDDERS 2
PROPOSAL FORM 6
PROPOSAL (BID FORM) 7
BID BOND 8
CONTRACT AGREEMENT 10
PAYMENT BOND 13
PERFORMANCE BOND 16
NOTICE of AWARD 19
NOTICE to PROCEED 20
GENERAL CONDITIONS 21
- DEFINITIONS 21
- PRELIMINARY MATTERS 23
- CORRELATION, INTERPRETATION and INTENT of CONTRACT DOCUMENTS 25
- AVAILABILITY OF LANDS; SUBSURFACE CONDITIONS; REFERENCE POINTS 26
- BONDS AND INSURANCE 27
- CONTRACTOR'S RESPONSIBILITIES 28
- WORK by OTHERS 34
- OWNER'S RESPONSIBILITIES 35
- ENGINEER'S STATUS DURING CONSTRUCTION 36
- CHANGES IN WORK 38
- CHANGE of CONTRACT PRICE 38
- CHANGE OF CONTRACT TIME 42
- GUARANTY 42
- PAYMENTS AND COMPLETION 43
- SUSPENSION OF WORK AND TERMINATION 45
- ARBITRATION 46
- MISCELLANEOUS 47

MEASUREMENT AND PAYMENT 49
TECHNICAL SPECIFICATIONS 51
- WATER SYSTEMS 51
- RESTORATION of ROADS, DRIVEWAYS, FENCES, LAWNS, and OTHER GRASSED AREAS 62
- SEEDING and SODDING 67
- FIRE HYDRANT 71

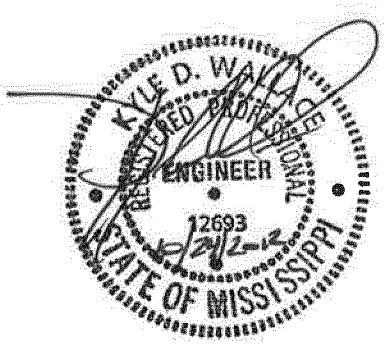

ADVERTISEMENT for BIDS

NOTICE is hereby given that the Mayor and Council at the City of Hattiesburg, Mississippi, will receive sealed bids until **10:00 a.m. on** _____, in the City Clerk's office at the City Hall of said city for furnishing the city's requirement for the following:

WATER SYSTEM EXPANSION
on VETERAN'S MEMORIAL BOULEVARD

CITY of HATIESBURG, MISSISSIPPI

Plans, specifications and proposal forms may be obtained from Shows, Dearman & Waits, Inc., P. O. Box 1711, 301 Second Avenue , Hattiesburg, Mississippi, 39403, upon a non-refundable deposit of $100.00. All bids must be accompanied by a bid security equal to five percent (5%) of the amount of the bid in the form of a certified check, cashiers check, or a bid bond written by a company properly licensed in Mississippi.

The successful bidder will be required to furnish a payment bond and performance bond written by a company licensed in Mississippi. The bonds will be in the amount equal to One Hundred Percent (100%) of the contract amount.

Each bid must be received in a sealed envelope which is marked in the lower left-hand corner EXACTLY as follows:

Bid:
WATER SYSTEM EXPANSION
on VETERAN'S MEMORIAL BOULEVARD

CITY of HATTIESBURG, MISSISSIPPI

BID OPENING TIME: 10:00 a.m.
DATE of BID OPENING: _____, 20__

No bid may be withdrawn for a period of sixty (60) days. The owner reserves the right to reject any or all bids received and to waive informalities.

The lowest and best proposal received will be accepted, subject to the provisions of Section 31-7-14 of the Mississippi Code of 1972, annotated and amended, and other applicable state law; but the council reserves the right to reject any or all proposals received and to waive informalities.

PUBLISHED by Order of the Council on the _____day of _____, A.D., 20__.

CITY of HATTIESBURG

BY:_____
Eddie Myers, City Clerk

PUBLISH: _____, 20__
_____, 20__

INSTRUCTIONS to BIDDERS

1) Bids will be received by **CITY of HATTIESBURG** herein called the "**OWNER**," at **Office of City Clerk at the City Hall** until**10:00 a.m. on _____, 20__**, and then at said office publicly opened and read aloud.

2) Each sealed envelope must be plainly marked on the outside as: "**BID for WATER SYSTEM EXPANSION on VETERAN'S MEMORIAL BOULEVARD**"

   a) Sealed Bids Hand Delivered: The outside of the sealed bid envelope must bear the name of the bidder, bidder's complete address, "Certificate of Responsibility Number," and the name of the project for which the bid is submitted.

   b) Sealed Bids Mailed

      i) The outside of the sealed bid envelope must bear the name of the bidder, bidder's complete address, "Certificate of Responsibility Number," and the name of the project for which the bid is submitted.

      ii) The sealed bid envelope (containing the bid) must then be enclosed in a carrier envelope addressed to the OWNER.

   c) No bid will be opened, considered, or accepted unless the above stated information is given as specified.

3) When required by the OWNER, sufficient evidence must be submitted that said "Certificate of Responsibility" has been issued and is in effect at the time of receiving bids.

4) All bids must be made on the required bid form (enclosed). All spaces, including blank spaces, for bid prices must be completed in ink or typewritten and the bid form must be fully completed and executed when submitted. Only one copy of the bid form is required.

5) The contract will be awarded on the basis of the low base bid or low combination of base bid and those alternatives which produce a total within available funds. The OWNER reserves the right to waive irregularities and to reject any or all bids. The OWNER reserves the right to award to a bidder other than the low bidder when, in the OWNER'S judgment, it is in his best interest to do so. Three such reasons may be, but are not limited to: (1) bidder being in arrears on existing contracts; (2) bidder being in litigation with the OWNER; (3) bidder having defaulted on a previous contract. Any bid may be withdrawn prior to the above scheduled time for the opening of bids or authorized postponement thereof. No bidder may withdraw a bid within 60 days after the actual date of the opening thereof. Should there be reasons why the contract cannot be awarded within the specified period; the time may be extended by mutual agreement between the OWNER and the bidder.

6) Bidders must satisfy themselves of the accuracy of the estimated quantities in the bid schedule by examination of the site and a review of the contract documents, including "ADDENDA." After bids have been submitted, the bidder shall not assert that there was a misunderstanding concerning the quantities of work or of the nature of the work to be done.

7) If any person contemplating the submission of a bid for the proposed contract is in doubt as to the true meaning of any part of the plans, specifications, or other proposed contract documents, submit a written request for an interpretation thereof to:

Shows, Dearman & Waits, Inc.
Consulting Engineers
301 2nd Ave
Hattiesburg MS 39401

a) The written request for clarification must be received at least ten (10) days prior to the date fixed for opening of bids.

b) Any interpretation of the contract documents will be made by the "ADDENDA" duly issued to each person receiving a set of such documents not later than forty-eight (48) hours prior to the time of opening of bids, excluding weekends and legal holidays.

c) The OWNER will not be responsible for explanations or interpretations of proposed documents, except as issued in accordance herewith.

8) The OWNER shall provide to bidders prior to bidding all information that is pertinent to, delineates, and describes the land owned as well as rights-of-way acquired or to be acquired.

9) The "Contract Documents" contain the provisions required for the construction of the project. Information obtained from an officer, agent, or employee of the OWNER or any other person shall not affect the risks or obligations assumed by the contractor or relieve contractor from fulfilling any of the conditions of the "Contract Agreement."

10) Each bid must be accompanied by a "Bid Bond" payable to the OWNER for five percent (5%) of the total amount of the bid. As soon as the bid prices have been compared, the OWNER will return all the said bonds except the bonds from the three (3) lowest responsive, responsible bidders. When the "Contract Agreement" is executed, the said bonds of the two remaining unsuccessful bidders will be returned. The "Bid Bond" of the successful bidder will be retained until the "Payment Bond," "Performance Bond," and "Certificates of Insurance" have been executed and approved, after which the "Bid Bond" will be returned to the successful bidder. A certified check may be used in lieu of a "Bid Bond."

11) A "Payment Bond," and "Performance Bond," each in the amount of one hundred percent (100%) of the contract price along with an owner-approved corporate surety that is listed on the US Treasury Department's most current list (Circular 570, as amended) will be required for the faithful performance of the contract.

12) Attorneys-in-fact who sign the "Bid Bond," "Payment Bond," and "Performance Bond" must file with each said bond a certified and effective-dated copy of their "Power of Attorney."

13) The party to whom the contract is awarded will be required to execute the "Contract Agreement" and obtain and submit the "Performance Bond," "Payment Bond," and "Certificate of Insurance" within ten (10) calendar days from the date when "Notice of Award" is delivered to the bidder. The "Notice of Award" shall be accompanied by the required "Contract Agreement" and said bond forms. In case of failure of the bidder to execute and submit the "Contract Agreement," "Performance Bond," "Payment

Bond," and "Certificate of Insurance," the OWNER may - at his option - determine the bidder to be in default, in which case the "Bid Bond" accompanying the proposal shall become the property of the OWNER.

14) The OWNER, within ten (10) calendar days of receipt of acceptable "Performance Bond," "Payment Bond," Certificate of Insurance," and "Contract Agreement" signed by the party to whom the "Contract Agreement" was awarded, shall sign the "Contract Agreement" and return to such party an executed duplicate of the "Contract Agreement" and issue a "Notice to Proceed." Should the OWNER not execute the "Contract Agreement" within such stated period, the bidder may by written notice withdraw his signed "Contract Agreement" without further liability on the part of either party. Such notice of withdrawal shall be effective upon receipt of the notice by the OWNER. Should there be reason(s) the "Notice to Proceed" cannot be issued within such stated period, the time may be extended by mutual agreement between the OWNER and contractor. If the "Notice to Proceed" has not been issued within the ten (10) calendar day period or within the period mutually agreed upon between OWNER and contractor, the contractor may terminate the "Contract Agreement" without further liability on the part of either party.

15) The OWNER may make such investigations as he deems necessary to determine the ability of the bidder to perform the work, and the bidder shall furnish to the OWNER all such information and data for this purpose as the OWNER may request. The OWNER reserves the right to reject any bid if the evidence submitted by, or investigation of, such bidder fails to satisfy the OWNER that such bidder is properly qualified to carry out the obligations of the "Contract Agreement" and to complete the work contemplated therein.

16) A conditional (or qualified) bid will not be accepted.

17) Award will be made to the lowest responsible, responsive bidder. (See herein paragraph 5.)

18) All applicable laws, ordinances, and the rules and regulations of all authorities having jurisdiction over construction of the stated project shall apply to the "Contract Agreement" throughout.

19) Each bidder is responsible for inspecting the site and for reading and being thoroughly familiar with the contract documents. The failure or omission of any bidder to do any of the foregoing shall in no way relieve any bidder from any obligation in respect to his bid.

20) Further, the bidder agrees to abide by the requirements under Executive Order No. 11246, as amended, including specifically the provisions of the equal opportunity clause set forth in the "Supplemental General Conditions."

21) Non-Resident Contractor: When a non-resident contractor submits a bid for a Mississippi public project, he shall attach thereto a copy of his resident state's current law pertaining to such state's treatment of non-resident contractors as required by House Bill Number 850, Chapter Number 527, Laws of 200588.

22) Telegraphic Modifications: Any bidder may modify his bid by telegraphic communication at any time, provided such communication is received prior to the scheduled bid opening. Written confirmation must be received within two (2) days after the scheduled bid opening or no consideration will be given the telegraphic modifications.

23) Resident Labor Used on Public Works: Each bidder must inform himself of the requirements and provisions of Sections 31-5-17, 31-5-2005 and 31-5-21 of the Mississippi Code of 200572, which require the use of Mississippi resident labor on this public works project.

I(we) agree to begin work within ten (10) calendar days after the issuance of the "Notice to Proceed," and to complete the work within **110** calendar days thereafter.

It is understood that the quantities of work listed for unit prices bid are approximate and are intended to merely indicate the general scope of the various items entering into the complete work. It is further understood and agreed that the Owner may increase or decrease the quantities listed in the proposal to an extent equivalent to thirty percent (30%) of the bid price (in dollars) and that no change in the unit prices proposed shall be occasioned thereby.

The undersigned further agrees that the unit and lump sum prices quoted include all items of work required or necessary for the accomplishment of the projected work and that these items include all work indicated on the plans and specifications for which no specific pay items have been established.

The undersigned certifies that the bid pries contained herein have been carefully checked and are submitted as correct and final.

If within thirty (30) days of the scheduled closing time for receipt of bids, this proposal is accepted, the undersigned will execute a formal contract within seven (7) days after official notification thereof, will deliver a surety bond for the faithful performance of this contract, and will complete the work within the time specified from the "Notice to Proceed."

Respectfully Submitted,

_____

Name of Firm or Bidder

by: _____

_____

Address

_____

City/State/Zip

WATER SYSTEM EXPANSION on VETERAN'S MEMORIAL BOULEVARD

CITY of HATTIESBURG

ITEM No.	DESCRIPTION	QUANTITY	UNIT	UNIT PRICE	EXTENSION
1	16" Class 350 Ductile Iron Water Main	15,680	Lin. Ft.		
2	12" Class 350 Ductile Iron Water Main	286	Lin. Ft.		
3	16" Class 350 Ductile Iron Water Main (Bored - No Casing)	120	Lin. Ft.		
4	Bore with 24" Steel Casing (Railroad)	262	Lin. Ft.		
5	Bore with 20" Steel Casing (Roadway)	245	Lin. Ft.		
6	Tie-in: Proposed 16" to Existing 12" (Straight Connection w/fittings)	1	Each		
7	Tie-in: Proposed 16" to Existing 16" (Straight Connection w/fittings)	1	Each		
8	Tie-in: Proposed 16" to Proposed 12" (Tee & other fittings)	1	Each		
9	Tie-in: Proposed 12" to Existing 12" (Hot Tap w/Valve Assembly)	1	Each		
10	16" Gate Valve	4	Each		
11	12" Gate Valve	1	Each		
12	3 Way Fire Hydrant w/Appurtenances (Incl. Tee, Valve, Hydrant, Brass Tag, Pipe, & other fittings)	13	Each		
13	Clearing and Grubbing	1	Lump Sum		
14	Temporary Erosion Control	1	Lump Sum		
15	Grassing	1	Lump Sum		
16	Maintenance of Traffic	1	Lump Sum		
17	Mobilization	1	Lump Sum		
				BID TOTAL:	

BID BOND

KNOWN ALL MEN BY THESE PRESENTS: that we, the undersigned, _____, as PRINCIPAL, and _____, as SURETY, are hereby held and firmly bound unto _____, as OWNER in the penal sum of _____ ($_____) for payment of which, well and truly to be made, we hereby jointly and severally bind ourselves, successors, and assigns.

Signed, this _____ day of _____, 20__.

The condition of the above obligation is such that whereas the PRINCIPAL has submitted to _____ a certain bid, attached hereto and hereby made a part hereof, to enter into a contract in writing for the **WATER SYSTEM EXPANSION on VETERAN'S MEMORIAL BOULEVARD** project.

NOW, THEREFORE,

a) If said bid shall be rejected, or

b) If said bid shall be accepted and the PRINCIPAL shall execute and deliver a contract in the form of contract attached hereto (properly completed in accordance with said bid) and shall furnish a bond for his faithful performance of said contract and for the payment of all persons performing labor or furnishing materials in connection therewith and shall in all other respects perform the agreement created by the acceptance of said bid, then this obligation shall be void; otherwise, the same shall remain in force and effect; it being expressly understood and agreed that the liability of the SURETY for any and all claims hereunder shall, in no event, exceed the penal amount of this obligation as herein stated.

The SURETY, for value received, hereby stipulates and agrees that the obligations of said SURETY and its bond shall be in no way impaired or affected by any extension of the time within which the OWNER may accept such bid and said SURETY does hereby waive notice of any such extension.

IN WITNESS WHEREOF, the PRINCIPAL and the SURETY have hereunto set their hands and seals, and such of them as are corporations have caused their corporate seals to be hereto affixed and these presents to be signed by their proper officers, the day and year first set forth above.

(Seal) _____ (L.S.)
PRINCIPAL

(Seal) _____
SURETY

by: _____

IMPORTANT NOTE: Surety companies executing bonds must appear on the US Treasury Department's most current list (Circular 570, as amended) and be authorized to transact business in the state where the project is located.

CONTRACT AGREEMENT

THIS AGREEMENT, made this _____ day of _____, 20___, by and between the **CITY of HATTIESBURG,** hereinafter called "OWNER" and _____, doing business as (an individual) or (a partnership) or (a corporation) hereinafter called "CONTRACTOR,"

WITNESSETH: that for and in consideration of the payments and agreements hereinafter mentioned:

ARTICLE 1 - Scope of Work

The CONTRACTOR agrees to furnish all tools, labor, equipment, materials, and supplies required to be furnished and perform all work required under an in accordance with the plans entitled:

WATER SYSTEM EXPANSION
on VETERAN'S MEMORIAL BOULEVARD

CITY of HATTIESBURG

which are on file at the office of the OWNER, and the Specifications, Proposals, General and Special Conditions attached hereto and made a part hereof as fully as though copied herein, under the direct supervision and to the entire satisfaction of the OWNER and in accordance with the laws of the State of Mississippi.

The term "Contract Documents" means and includes the following:

Advertisement for Bids	Notice of Award
Instructions to Bidders	Notice to Proceed
Bid	Change Order
Bid Bond	General Conditions
Contract Agreement	Supplemental General Conditions
Payment Bond	Technical Specifications
Performance Bond	Drawings

Addenda: No. ____. Dated: _____, 201__

No. ____. Dated: _____, 201__

No. ____. Dated: _____, 201__

No. ____. Dated: _____, 201__

No. ____. Dated: _____, 201__

ARTICLE 2 - The Contract Sum

It is further agreed and understood by and between the parties hereunto that the OWNER agrees to pay and the CONTRACTOR agrees to accept full and final compensation for all work done under this agreement, the lump sum

amount adjusted for variation of quantities at the unit prices named in the proposal, which is hereto attached, such payment to be made in lawful money of the United States at the time and in the manner hereinafter set forth.

ARTICLE 3 - Time of Completion

The CONTRACTOR agrees, for the consideration above expressed, to begin and complete the work within the time specified in the proposal. If the CONTRACTOR fails to complete the work in the time specified, he shall pay the OWNER as liquidated damages, ascertained and agreed, and not in the nature of a penalty, the sum of **Five Hundred Dollars ($500.00)** for each day delayed, which shall be deducted from the final amount to be paid under the contract; provided that the extension of time with the waiver of liquidated damages may be granted as provided for in the Specifications.

ARTICLE 4 - Progress Payments

1) The owner agrees to make progress payments during the construction as provided herein as follows:

2) The Engineer will, on or before the tenth (10th) day of each month, make an estimate of the value of the work done based on contract prices.

3) The OWNER agrees to pay the CONTRACTOR one hundred percent (100%) of the value of the work done each month, less ten percent (10%) retainage until final acceptance of the work has been made.

ARTICLE 5 - Acceptance and Final Payment

1) Upon receipt of written notice that the work is ready for final acceptance and inspection, the Engineer shall promptly make such inspection and when he finds the work acceptable under the contract and the contract fully performed, he shall promptly issue a final certificate, over his own signature, stating the work provided for in the contact has been completed and is accepted by him under the terms and conditions thereof. Then, the entire balance shall be due the CONTRACTOR within thirty (30) days from the date of said final acceptance.

2) Before issuance of final certificate, the CONTRACTOR shall submit evidence satisfactory to the Engineer that all payrolls, materials, bills, and other indebtedness connected with the work have been paid.

3) The making and acceptance of the final payment shall constitute a waiver of all claims by the OWNER, other than those arising from unsettled liens, from faulty work or materials appearing within one (1) year after payment or claims previously made and still unsettled.

4) If, after the work has been substantially completed, full completion thereof is materially delayed through no fault of the CONTRACTOR and the Engineer so certifies, the OWNER shall, upon certificate of the Engineer and without terminating the contract, make payment of the balance due for that portion of the work fully completed and accepted. Such payment shall be made under the terms and conditions governing final payment, except that it shall not constitute a waiver of claims.

ARTICLE 6 - The Performance Bond

The CONTRACTOR agrees to furnish a bond with an approved surety, thereon guaranteeing the performance of this contract in no less than one hundred percent (100%) of the amount of the contract. Said bond shall be conditioned on full and complete performance of the contract and for the payment of all labor and materials for a period of one (1) year after completion. The surety on said bond shall be a surety company of financial resources satisfactory to the OWNER and authorized to do business in the State of Mississippi.

ARTICLE 7 - Insurance

The CONTRACTOR agrees to also carry public liability insurance, property damage insurance, and workman's compensation insurance in amounts as required by the specifications.

IN WITNESS WEHREOF, the parties hereto have executed this "Contract Agreement" the day and year first written above.

(Owner's Seal)

ATTEST by:

_____	**CITY of HATTIESBURG**
	OWNER
_____	**Johnny Dupree**
Name	Name
_____	**Mayor**
Title	Title

P. O. Box 1898
Address
Hattiesburg MS 39403-1898
City/State/Zip

(Contractor's Seal)

ATTEST by:

_____	_____
	CONTRACTOR
_____	_____
Name	Name
_____	_____
Title	Title

_____
Address *(Please print)*

_____
City/State/Zip

PAYMENT BOND

KNOWN ALL MEN BY THESE PRESENTS: that

_____	_____
Contractor	Contractor's Address
a _____	_____
(Corporation, Partnership, Individual)	City/State/Zip

hereinafter called "**PRINCIPAL,**" and

_____	_____
SURETY	SURETY's Address
	_____
	City/State/Zip

hereinafter called '**SURETY,**" are held and firmly bound unto

CITY of HATTIESBURG	P O Box 1898
OWNER	OWNER's Address
	Hattiesburg MS 39403-1898
	City/State/Zip

hereinafter called "**OWNER,**"

in the penal sum of _____ Dollars ($_____)
in lawful money of the United States for the payment of which sum well and truly to be made, we bind ourselves, successors, and assigns, jointly and severally, firmly by these presents.

THE CONDITION OF THIS OBLIGATION is such that whereas, the PRINCIPAL entered into a certain contract with the OWNER, dated the _____ day of _____, 20__, a copy of which is hereto attached and made a part hereof for the construction of:

WATER SYSTEM EXPANSION
on VETERAN'S MEMORIAL BOULEVARD

NOW, THEREFORE, if the PRINCIPAL shall promptly make payment to all persons, firms subcontractors, and corporations furnishing materials for or performing labor in the prosecution of the work provided in such contract, and any authorized extension or modification thereof, including

all amounts due to materials, lubricants, oil, gasoline, coal and coke, repairs on machinery, equipment and tools, consumed or used in connection with the construction of such work, and all insurance premiums on said work, and for all labor performed in such work whether by subcontractor or otherwise, then this obligation shall be void, otherwise to remain in full force and effect.

PROVIDED FURTHER, that the said SURETY for value received hereby stipulates and agrees that no change, extension of time, alteration or addition to the terms of the contract or to the work to be performed thereunder or the specifications accompanying the same shall in any wise affect its obligation on this bond, and it does hereby waive notice of any such change, extension of time, alteration or addition to the terms of the contract or to the work or to the specifications.

PROVIDED FURTHER, that no final settlement between the OWNER and the PRINCIPAL shall abridge the right of any beneficiary hereunder whose claim may be unsatisfied.

IN WITNESS WHEREOF, said PRINCIPAL and SURETY have hereunto set their hands and seals at _____ this the _____ day of _____, 20___.

(PRINCIPAL`s Seal)

ATTEST by:

_____	_____ PRINCIPAL
_____ Name	_____ Authorized Representative Executing for PRINCIPAL
_____ (PRINCIPAL) Secretary; Witness as to PRINCIPAL	_____ Title
_____ Address	
_____ City/State/Zip	

(SURETY's Seal)

ATTEST by:

_____	_____ SURETY
_____ Name	_____ Authorized Person Executing For SURETY
_____ Title	_____ Title
_____ Witness as to SURETY	
_____ Address	
_____ City/State/Zip	

NOTE: Date of bond must not be prior to the date of the contract agreement. If PRINCIPAL is a partnership, all partners should execute the bond.

IMPORTANT NOTE: SURETY companies executing bonds must appear on the US Treasury Department's most current list (Circular C570, as amended) and be authorized to transact business in the state where the project is located.

KNOWN ALL MEN BY THESE PRESENTS: that

_____ Contractor	_____ Contractor's Address
a _____ (Corporation, Partnership, Individual)	_____ City/State/Zip

hereinafter called "**PRINCIPAL,**" and

_____ SURETY	_____ SURETY's Address
	_____ City/State/Zip

hereinafter called '**SURETY,**" are held and firmly bound unto

CITY of HATTIESBURG OWNER	P. O. Box 1898 OWNER's Address
	Hattiesburg MS 39403-1898 City/State/Zip

hereinafter called "**OWNER,**"

in the penal sum of _____ Dollars ($_____)
in lawful money of the United States for the payment of which sum well and truly to be made, we bind ourselves, successors, and assigns, jointly and severally, firmly by these presents.

THE CONDITION OF THIS OBLIGATION is such that whereas, the PRINCIPAL entered into a certain contract with the OWNER, dated the _____ day of _____, 20___, a copy of which is hereto attached and made a part hereof for the construction of:

WATER SYSTEM EXPANSION
on VETERAN'S MEMORIAL BOULEVARD

NOW, THEREFORE, if the PRINCIPAL shall well, truly, and faithfully perform its duties, all the undertakings, covenants, terms, conditions, and agreements of said contract during the original term thereof, and any extensions thereof which may be granted by the OWNER, with or without notice to the SURETY, and during the one year guaranty period, and if PRINCIPAL shall satisfy all claims and demands incurred under such contract, and shall fully indemnify and save harmless the OWNER from all costs and damages that it may suffer by reason of failure to do so, and shall

reimburse and repay the OWNER all outlay and expense which the OWNER may incur in making good any default, then this obligation shall be void; otherwise to remain in full force and effect.

NOW THEREFORE, if the PRINCIPAL shall promptly make payment of all taxes, licenses, assignments, contributions, damages, penalties, and interest thereon, when and as the same may lawfully be due the State of Mississippi, or any county, municipality, board, department, commission, or political subdivision thereof, by reason of and directly connected with the performance of said contract or any part thereof as provided by Sections 27-65-1, 27-65-21, 27-67-1, 27-67-301, and 31-5-3, supra, or any other applicable statute or other authority, then this obligation shall be null and void; otherwise, it shall remain in full force and effect.

PROVIDED FURTHER, that the said SURETY, for value received hereby stipulates and agrees that no change, extension of time, alteration or addition to the terms of the contract or to work to be performed thereunder or the specifications accompanying the same shall in any wise affect its obligation on this bond, and it does hereby waive notice of any such change, extension of time, alteration or addition to the terms of the contract or to the work or to the specifications.

PROVIDED FURTHER, that no final settlement between the OWNER and the PRINCIPAL shall abridge the right of any beneficiary hereunder whose claim may be unsatisfied.

IN WITNESS WHEREOF, said PRINCIPAL and SURETY have hereunto set their hands and seals at _____ this the _____ day of _____, 20___.

(PRINCIPAL`s Seal)

ATTEST by:

_____	_____ PRINCIPAL
_____ Name	_____ Authorized Person Executing for PRINCIPAL
_____ (PRINCIPAL) Secretary; Witness as to PRINCIPAL	_____ Title
_____ Address	
_____ City/State/Zip	

(SURETY`s Seal)

ATTEST by:

SURETY

_____	_____
Name	Authorized Person Executing For SURETY
_____	_____
Title	Title
_____	
Witness as to SURETY	
_____	
Address	
_____	
City/State/Zip	

NOTE: Date of bond must not be prior to the date of the contract agreement. If PRINCIPAL is a partnership, all partners should execute the bond.

IMPORTANT NOTE: *SURETY companies executing bonds must appear on the US Treasury Department's most current list (Circular C570, as amended) and be authorized to transact business in the state where the project is located.*

NOTICE of AWARD

SHOWS, DEARMAN & WAITS, INC.
CONSULTING ENGINEERS
P.O. BOX 1711, 301 SECOND AVENUE
HATTIESBURG, MISSISSIPPI, 39403-1711
P: (601) 544-1821 F: (601) 544-0501
HTTP://WWW.SD-W.COM

RAYMOND M. DEARMAN, P.E., R.L.S.
MICHAEL T. WAITS, P.E., R.L.S.
NICHOLAS M. CONNOLLY, P.E., R.L.S.
KYLE D. WALLACE, P.E.
SHEA E. McNEASE, P.E.
ERIC F. LANG, E.I.
JOHN T. WEEKS, E.I.

PAUL J. SHOWS (1996)

TO: _____

_____

_____

Project Description:

WATER SYSTEM EXPANSION on VETERAN'S MEMORIAL BOULEVARD

The owner has considered the bid submitted by you for the above described work in response to his/its "Advertisement for Bids" dated_____,20__ and "Instructions to Bidders." You are hereby notified that your bid has been accepted for items in the amount of _____ ($_____).

You are required by the "Instructions to Bidders" to execute the "Contract Agreement" and furnish the required contractor's "Payment Bond and Performance Bond" and certificates of insurance within ten (10) calendar days from the date of this Notice to you. *(See "Contract Documents.")*

If you fail to execute said "Contract Agreement" and to furnish said bonds and certificates within ten (10) days from the date of this Notice, said owner will be entitled to consider all your rights arising out of the owner's acceptance of your bid as abandoned. The owner will be entitled to such other rights as may be granted by law.

You are required to return an acknowledged copy of this "Notice of Award" to the owner.

Dated this _____ day of _____, 20__.

CITY of HATTIESBURG
OWNER

by: _____
Johnny Dupree

Mayor
Title

ACCEPTANCE of NOTICE

Receipt of the above "Notice of Award" is acknowledged by: _____
Contractor Authorized Signee

This the _____ day of _____, 20____. _____
Print Name

_____
Title

NOTICE to PROCEED

SHOWS, DEARMAN & WAITS, INC.
CONSULTING ENGINEERS
P.O. BOX 1711, 301 SECOND AVENUE
HATTIESBURG, MISSISSIPPI, 39403-1711
P: (601) 544-1821 F: (601) 544-0501
HTTP://WWW.SD-W.COM

RAYMOND M. DEARMAN, P.E., R.L.S.
MICHAEL T. WAITS, P.E., R.L.S.
NICHOLAS M. CONNOLLY, P.E., R.L.S.
KYLE D. WALLACE, P.E.
SHEA E. McNEASE, P.E.
ERIC F. LANG, E.I.
JOHN T. WEEKS, E.I.

PAUL J. SHOWS (1996)

TO: _____
_____
_____

Project Description: **WATER EXPANSION SYSTEM on VETERAN'S MEMORIAL BOULEVARD**

In accordance with the "Contract Agreement" dated _____, 20__:

1) You are hereby notified to commence stated project work on or before _____, 20___.

2) You are to complete the stated project work within **110** consecutive calendar days thereafter.

3) The date of completion of all stated project work is therefore _____, 20__.

Dated this _____ day of _____, 20___.

CITY of HATTIESBURG
OWNER

by: _____
Johnny DuPree

Mayor
Title

ACCEPTANCE of NOTICE

Receipt of the above "Notice to Proceed" is acknowledged by: _____
Contractor Authorized Signee

This the _____ day of _____, 20____. _____
Print Name

_____
Title

ARTICLE I

DEFINITIONS

Wherever used in these "General Conditions" or in the other contract documents, the following terms shall have the meanings indicated, which shall be applicable to both the singular and plural thereof:

Acceptance: Acceptance by the owner of the work as being fully complete in accordance with the contract documents.

Agreement: The written agreement between the owner and the contractor covering the work to be performed; the contract documents, which are attached to and made a part of the agreement, also designated as the contract.

Addenda: Written or graphic instruments issued prior to the execution of the agreement, which modify and/or interpret any or all part thereof of the contract documents, drawings and specifications by addition, deletions, clarifications, and/or corrections.

Application for Payment: The form furnished by the engineer, which is to be used by the contractor in requesting progress payments. The "Application for Payment" form is submitted along with an affidavit by the contractor that progress payments theretofore received from the owner on account for completed work have been applied by the contractor to discharge in full all of the contractor's obligations stated in prior "Application(s) for Payment."

Approval: Accepts as satisfactory.

Bid: The offer or proposal of the bidder submitted on the prescribed form setting forth the prices for the work to be performed.

Bidder: Any person, firm, or corporation submitting a bid for the work.

Bonds: Bid, performance, and payment bonds and other instruments of security furnished by the contractor and contractor's surety in accordance with the contract documents and in accordance with the law of the place/location of the project.

Change Order: A written order to the contractor signed by the owner authorizing an addition to, deletion of, or revision in the work, or an adjustment in the contract price or the contract time issued after execution of the agreement.

Contract Documents: "Advertisement for Bids; Instructions for Bidders; Contractor's Bid; Bid Bond; Contract Agreement; General Conditions; Supplemental General Conditions; Technical Specifications; Payment Bond; Performance Bond; Notice of Award; Notice to Proceed; Change Order, and Drawings."

Contract Price: The total moneys payable to the contractor under the contract documents.

Contract Time: The number of calendar days stated in the agreement for the completion of the work.

Contracting Officer: The individual who is authorized to sign the contract documents on behalf of the owner's governing body. The contracting officer is also known as the "Owner's Recipient."

Contractor: The person, firm, or corporation with whom/which the owner has executed the agreement.

Day: A calendar day of twenty-four hours measured from midnight to the next midnight.

Drawings: The drawings that show the character and scope of the work to be performed that have been prepared or approved by the engineer and are referred to in the contract documents.

Engineer: The person, firm, or corporation named as such in the contract documents.

Field Order: A written order issued by the engineer which clarifies or interprets the contract documents in accordance with herein **Article 9**, paragraph 3 or orders minor changes in the work in accordance with herein **Article 10**, paragraph 2.

He, His, and Him: These are general pronouns that shall represent both male and female genders.

Modification: (a) A written amendment of the contract documents signed by both parties, (b) a change order, (c) a written clarification or interpretation issued by the engineer in accordance with herein **Article 9**, paragraph 3, or (d) a written order for a minor change or alteration in the work issued by the engineer pursuant to herein **Article 10**, paragraph 2. A modification may only be issued after execution of the agreement.

Notice of Award: The written notice by owner to the apparent successful bidder stating that upon compliance with the conditions precedent to be fulfilled by the bidder within the time specified, owner will execute and deliver the agreement to him.

Notice to Proceed: A written notice given by owner to contractor (with a copy to engineer) fixing the date on which the contract time will commence to run and on which the contractor shall start to perform said contractor's obligations under the contract documents.

Owner: A public body or authority, corporation, association, partnership, or individual for which/whom the work is to be performed.

Project: The entire construction to be performed as provided in the contract documents.

Resident Project Representative: An authorized representative of the engineer assigned to observe the work performed and materials furnished by the contractor or such other person as may be appointed by the owner as his representative. The contractor shall be notified in writing of the identity of this representative.
Shop Drawings: All drawings, diagrams, illustrations, brochures, schedules, and other data that are prepared by the contractor, a subcontractor, manufacturer, supplier, or distributor and which illustrate the equipment, material, or some portion of the work and as required by the contract documents.

Samples: Physical examples which illustrate materials, equipment, or workmanship and establish standards by which the work will be judged.

Specifications: Those portions of the contract documents consisting of written technical descriptions of materials, equipment, construction systems, standards, and workmanship as applied to the work.

Subcontractor: An individual, firm or corporation having a direct contract with contractor or with any other subcontractor for the performance of a part of the work at the site.

Substantial Completion: Substantial completion may be granted for all or portions of the work prior to final completion and stopping of contract time. Substantial completion is defined as the date when the construction is sufficiently completed in accordance with the contract documents so that the project or specified part of the project can be utilized for the purpose for which it was intended. The contract provides that the retainer may be reduced for that portion of the work for which substantial completion is granted, but the granting of substantial completion will not stop contract time or liquidated damages.

Supplemental General Conditions: Certain conditions of this contract required by the State of Mississippi, Department of Environmental Quality and by federal laws, executive orders, and regulations on projects funded by the state revolving fund loan program.

Supplier: An individual who and/or firm, corporation, or other organization that supplies materials or equipment for the work - including that which is fabricated to a special design, but does not perform labor at the site.

Special Conditions: Special conditions refer only to the work under this contract when included as a part of the contract documents.

Surety: The corporate body which is bound with the contractor and which engages to be responsible for the contractor and his acceptable performance of the work.

Work: Any and all obligations, duties, and responsibilities necessary to the successful completion of the project assigned to or undertaken by contractor under the contract documents, including all labor, materials, equipment and other incidentals, and the furnishing thereof.

Written Notice: The term "Notice" or "notice" as used herein shall mean and include all written notices, demands, instructions, claims, approvals, and disapprovals required to obtain compliance with contract requirements. Written "Notice" shall be deemed to have been duly served if delivered in person to the individual or to a member of the firm or to an officer of the corporation for whom it is intended, or to an authorized representative of such individual, firm or corporation, or if delivered at or sent by registered mail to the last business address known to him who gives the "Notice." Unless otherwise stated in writing, any "Notice" to or demand upon the owner under this contract shall be delivered to the owner through the engineer.

ARTICLE 2

PRELIMINARY MATTERS

1) **Award:** The award of the contract, if it is awarded, will be to the lowest responsive, responsible bidder. No "Notice of Award" will be given until the owner has concluded such investigations as he deems necessary to establish the responsibility, qualifications, and financial ability of the bidders to do the work in accordance with the contract documents to the satisfaction of the owner within the time prescribed. The owner reserves the right to reject the bid of any bidder who does not pass such investigation to the owner's satisfaction. In analyzing bids, the owner may take into consideration alternates and unit prices, if requested by the bid forms. If the contract is awarded, the owner will issue the "Notice of Award" and give the successful bidder a contract for execution within sixty (60) days after the opening of bids.

2) **Execution of Agreement:** At least three counterparts of the agreement and such other contract documents will be executed and delivered by the contractor to the owner within ten (10) calendar days of receipt from the owner.

3) **Forfeiture of Bid Security:** Failure of the successful bidder to execute and deliver the agreement and deliver the required bonds as stipulated herein in **Article 2**, paragraph 2 shall be just cause for the owner to annul the "Notice of Award" and declare the bid and any security therefore forfeited.

4) **Contractor's Pre-Start Representations:** Contractor represents that he has familiarized himself with, and assumes full responsibility for having familiarized himself with, the nature and extent of the contract documents, work, locality, and with all local conditions and federal, state, and local laws, ordinances, rules, and regulations that may in any manner affect performance of the work, and represents that he has correlated his study and observations with the requirements of the contract documents. Contractor also represents that he has studied all surveys and investigation reports of subsurface and latent physical conditions referred to in the

specifications and made such additional surveys and investigations as he deems necessary for the performance of the work at the contract price in accordance with the requirements of the contract documents and that he has correlated the results of all such data with the requirements of the contract documents.

5) **Commencement of Contract Time:** The contract time will commence to run no more than fifteen (15) days after issuance of the "Notice to Proceed."

6) **Starting the Project:** Contractor shall start to perform his obligations under the contract documents on the date when the contract time commences to run. No work shall be done at the site prior to the date on which the contract time commences to run, except with the written consent of the owner.

7) **Before Starting Construction:** Before undertaking each part of the work, the contractor shall carefully study and compare the contract documents and check and verify pertinent figures shown thereon and all applicable field measurements. The contractor shall at once report in writing to the engineer any conflict, error or discrepancy which he may discover; however, the contractor shall not be liable to the owner or engineer for contractor's failure to discover any conflict, error, or discrepancy in the drawings or specifications.

8) **Schedule of Completion:** Within ten (10) days after delivery of the "Notice to Proceed" by the owner to the contractor, the contractor shall submit to the engineer an estimated progress schedule with earnings indicating the starting and completion dates of the various stages of the work and a preliminary schedule of shop drawing submissions. (See herein **Article 6**, paragraphs 22 through 26.) The engineer shall review and return said progress schedule or require revisions thereto within fourteen (14) days of its submittal. The responsibility for coordinating the work of all contractors shall be as provided in the special conditions if there is more than one contractor involved in a project.

9) **Preconstruction Conference:** Prior to starting the work at the site, a preconstruction conference will be held to review the above mentioned schedules to establish procedures for handling shop drawings and other submissions, for processing applications for payment, and to establish a working understanding between the parties as to the project. Present at the conference will be the owner or owner's representative, the engineer, resident project representatives, contractor, and contractor's superintendent.

10) **Qualification of Subcontractors, Material-Men, and Suppliers**

a) Within ten (10) working days after bid opening, the contractor will (if required) submit to the owner and the engineer for acceptance a list of the names of subcontractors and such other persons and organizations (including those who are to furnish principal items of materials or equipment) proposed for those portions of the work to which the identity of the subcontractors and other persons and organizations must be submitted as specified in the contract documents.

b) Within thirty (30) working days after receiving said list, the engineer will notify the contractor in writing if either the owner or the engineer, after due investigation, has reasonable objection to any subcontractor, person, or organization on said list. The failure of the owner or the engineer to make objection to any subcontractor, person, or organization on said list within thirty (30) days of receipt shall constitute an acceptance of such subcontractor, person, or organization. Acceptance of any such subcontractor, person, or organization shall not constitute a waiver of any right of the owner or the engineer to reject defective work, material, or equipment, or any work, material, or equipment not in conformance with the requirements of the contract documents.

ARTICLE 3

CORRELATION, INTERPRETATION and INTENT of CONTRACT DOCUMENTS

1) **Intent**: It is the intent of the specifications and drawings to describe a complete project to be constructed in accordance with the contract documents. The contract documents comprise the entire agreement between the owner and the contractor. The contract documents may be altered only by a modification.

2) **Binding of Contract Documents**: The contract documents are complementary; what is called for by one is as binding as if called for by all. If the contractor finds a conflict, error, or discrepancy in the contract documents, contractor shall call it to the engineer's attention in writing at once and before proceeding with the work affected thereby; however, contractor shall not be liable to owner or engineer for contractor's failure to discover any conflict, error, or discrepancy in the specifications or drawings. The various contract documents shall be given precedence, in case of conflict, error, or discrepancy, as follows: supplemental general conditions; agreement modifications; addenda; special conditions; information to bidders; general conditions; technical specifications, and drawings. If the requirements of other contract documents are more stringent than of the supplemental general conditions, the more stringent requirements shall apply.

3) **Similar Words Interpretation**: The words "furnish," "required," "furnish and install," "install," and "provide" or words with similar meaning shall be interpreted, unless otherwise specifically stated, to mean "furnish and install-- complete in place and ready for service."

4) **Miscellaneous Items and Accessories**: Miscellaneous items and accessories that are not specifically mentioned that are essential to produce a complete and properly operating installation or usable structure or plant providing the indicated function shall be furnished and installed without change in the contract price. Such miscellaneous items and accessories shall be of the same quality standards, including material, style, finish, strength, class, weight, and other applicable characteristics as specified for the major component of which the miscellaneous item or accessory is an essential part and shall be approved by the engineer before installation. The above requirement is not intended to include major components not covered by or inferable from the drawings and specifications.

5) **Coordination of Work**: The work of all trades under this contract shall be coordinated by the contractor in such a manner as to obtain the best workmanship possible for the entire project, and all components of the work shall be installed or erected in accordance with the best practices of the particular trade.

6) **Manufacturer's Literature and Agency/Organization Codes**: Manufacturer's literature, when referenced, shall be dated and numbered and is intended to establish the minimum requirements acceptable. Whenever reference is given to codes, standard specifications, or other data published by regulating agencies or accepted organizations, including but not limited to, national electrical code, applicable state building code, federal specifications, ASTM Specifications, various institute specifications, and the like, it shall be understood that such reference is to the latest edition including addenda in effect on the date of bid.

7) **Brand Names:** Brand names, where used in the technical specifications, are intended to denote the standard of quality required for the particular material or product. The term "equal" or "equivalent" when used in connection with brand names shall be interpreted to mean a material or product that is similar and equal in type, quality, size, capacity, composition, finish, color, and other applicable characteristics to the material or product specified by trade name and that is suitable for the same use and capable of performing the same function in the opinion of the engineer as the material or product so specified. It shall be understood by all bidders that "or equal" products may be used for all brands specified unless specifically noted otherwise. Proposed equivalent items must be approved by the engineer before they are purchased or incorporated in the work. (When a brand name, catalog number, model number, or other identification is used without the phrase "or equal," the contractor shall assume the phrase "or equal.")

ARTICLE 4

AVAILABILITY OF LANDS; SUBSURFACE CONDITIONS; REFERENCE POINTS

1) **Availability of Land**: The owner will furnish, as indicated in the contract documents, the lands upon which the work is to be done, rights-of-way for access thereto, and such other lands which are designated for the use of the contractor. Easements for permanent structures or permanent changes in existing facilities will be obtained and paid for by the owner unless otherwise specified in the contract documents. Other access to such lands or rights-of-way for the contractor's convenience shall be the responsibility of the contractor. The contractor will provide for all additional lands and access thereto that may be required for temporary construction facilities or storage of materials and equipment.

2) **Surveys and Test:** The owner will, upon request, furnish to the bidder(s) copies of all available boundary surveys and subsurface tests at no cost.

3) **Subsurface Conditions:** The contractor acknowledges that he has investigated conditions prior to bidding and is satisfied with said conditions affecting the work, including but not restricted to those bearing upon transportation, disposal, handling and storage of materials, availability of labor, water, electric power, roads, and uncertainties of weather, river stages, tides, water tables or similar physical conditions at the site, the conformation and conditions of the ground, and the character of equipment and facilities needed preliminary to and during prosecution of the work. The contractor further acknowledges that he has satisfied himself as to the character, quality, and quantity of surface and subsurface materials or obstacles to be encountered insofar as this information is reasonably ascertainable from an inspection of the site, including all exploratory work done on behalf of the owner on the site or any contiguous site, as well as from information presented by the drawings and specifications made a part of this contract, or any other information made available to said contractor prior to receipt of bids. Any failure by the contractor to acquaint himself with the available information will not relieve said contractor from responsibility for estimating properly the difficulty or cost of successfully performing the work. The owner assumes no responsibility for any conclusions or interpretations made by the contractor on the basis of the information made available by the owner.

4) **Differing Site Conditions**

a) The contractor shall promptly, and before such conditions are disturbed, notify the owner in writing of: (1) subsurface or latent physical conditions at the site differing materially from those indicated in this contract, or (2) unknown physical conditions at the site and/or of an unusual nature, differing materially from those ordinarily encountered and generally recognized as inherent in work of the character provided for in this contract. The owner shall promptly investigate the conditions, and if he finds that such conditions do materially so differ and cause an increase or decrease in the contractor's cost of, or the time required for, performance of any part of the work under this contract, whether or not changed as a result of such conditions, an equitable adjustment shall be made and the contract modified in writing accordingly.

b) No claim of the contractor under this clause shall be allowed unless the contractor has given the notice required in (a) above; provided, however, the time prescribed thereof may be extended by the owner.

c) No claim by the contractor for an equitable adjustment hereunder shall be allowed if asserted after final payment under this contract.

ARTICLE 5

BONDS AND INSURANCE

1) **Performance and Payment Bonds**: The contractor's attention is directed to the instructions for bidders, the performance bond, and the payment bond as contained in the contract documents.

2) **Contractor's Liability Insurance:** The contractor shall provide the owner with insurance certificates certifying that all required liability insurance is in force, and such insurance certificates shall include provisions that the insurance shall not be canceled, allowed to expire, or be materially changed without giving the owner advance notice by registered mail.

3) **Sublet Work:** The contractor agrees that if any part of the work under the contract is sublet, he will require the subcontractor(s) to carry insurance as required, and that the contractor will require the subcontractor(s) to furnish to contractor insurance certificates similar to those required by the owner in above listed paragraph 2.

4) **Owner's Liability Insurance:** The owner will be responsible for purchasing and maintaining owner's own liability insurance and, at his option, may purchase and maintain such insurance as will protect him against claims which may arise from operations under the contract documents.

5) **Fire and Extended Coverage Insurance (Builders' Risk):** The contractor shall maintain, as applicable, with an insurance company or insurance companies acceptable to the owner, fire, extended coverage, and vandalism and malicious mischief insurance on buildings and structures while in the course of construction including foundations, additions, attachments and all permanent fixtures belonging to and constituting a part of said buildings or structures. The policy or policies shall also cover machinery if the cost of machinery is included in the contract. The amount of insurance must be at all times at least equal to the actual cash value of the insured property. The policy shall be in the name of the owner and the contractor, as their interests may appear, and shall also cover the interests of all subcontractors performing work.

6) **Flood Insurance:** The contractor shall maintain, as applicable, with an insurance company or insurance companies acceptable to the owner, any flood insurance made available under the US National Flood Insurance Act of 1968, as amended. This requirement applies only to insurable improvements with a value in excess of ten thousand dollars ($10,000.00 USD) located inside the boundaries of a special flood hazard area delineated on a flood hazard boundary map or flood insurance rate map which has been issued by the Department of Housing and Urban Development and the Federal Insurance Administration. The insurance shall be in an amount at least equal to the total eligible project costs located within the flood hazard area, or to the maximum limit of coverage made available under the National Flood Insurance Act of 1968, as amended, whichever is less, for the entire life of the contract.

7) **Evidence of Insurance:** The contractor shall provide the owner with satisfactory evidence certifying that the foregoing insurance is in force, and such evidence shall include provisions that the insurance shall not be canceled, allowed to expire, or be materially changed without giving the owner advance notice by registered mail.

8) **Cancellation and Re-Insurance:** If any insurance should be canceled or changed by the insurance company or should any insurance expire during the period of this contract, the contractor shall be responsible for securing other acceptable insurance to provide the coverage specified in this section to maintain continuous coverage during the life of this contract.

ARTICLE 6

CONTRACTOR'S RESPONSIBILITIES

1) **Supervision and Superintendence:** The contractor will supervise and direct the work. The contractor will be solely responsible for the means, methods, techniques, sequences, and procedures of construction. The contractor will employ and maintain on the work a qualified supervisor or superintendent who shall have been designated in writing by the contractor as the contractor's representative at the site. The supervisor shall have full authority to act on behalf of the contractor, and all communications given to the supervisor shall be as binding as if given to the contractor. The supervisor shall be present on the site at all times as required to perform adequate supervision and coordination of the work. (Copies of written communications given to the superintendent shall be mailed to the contractor's home office).

2) **Labor, Materials, and Equipment:** The contractor will provide competent, suitable, qualified personnel to survey and lay-out the work and perform construction as required by the contract documents. Contractor will at all times maintain good discipline and order at the site.

3) **Contractor to Furnish:** The contractor will furnish all materials, equipment, labor, transportation, construction equipment and machinery, tools, appliances, fuel, power, light, heat, local telephone, water, sanitary facilities and all other facilities and incidentals necessary for the execution, testing, initial operation, and completion of the work.

4) **Condition of Materials and Equipment:** All materials and equipment will be new except as otherwise provided in the contract documents. When special makes or grades of material which are normally packaged by the supplier or manufacturer are specified or approved, such materials shall be delivered to the site in their original packages or container with seals unbroken and labels intact.

5) **Materials and Equipment Specifications:** All materials and equipment shall be applied, installed, connected, erected, used, cleaned, and conditioned in accordance with the instructions of the applicable manufacturer, fabricator, or processors, except as otherwise provided in the contract documents.

6) **Materials, Equipment, Products, and Substitutions**

   a) Materials, equipment, and products incorporated in the work must be approved for use before being purchased by the contractor. The contractor shall submit to the engineer a list of proposed materials, equipment, or products, together with such samples as may be necessary for contractor to determine said materials, equipment or products acceptability and obtain engineer's approval within ninety (90) calendar days after award of contract unless otherwise stipulated in the special conditions. No request for payment for "or equal" equipment will be approved until this list has been received and approved by the engineer.

   b) Whenever a material, article, or piece of equipment is identified on the drawings or specifications by reference to brand name or catalogue number, it shall be understood that this is referenced for the purpose of defining the performance of other salient requirements and that other products of equal capacities, quality, and function shall be considered. The contractor may recommend the substitution of a material, article, or piece of equipment of equal substance and function for those referred to in the contract documents by reference to brand name or catalogue number, and if, in the opinion of the engineer, such material, article, or piece of equipment is of equal substance and function to that specified, the engineer may approve its substitution and use by the contractor. Incidental changes or extra component parts required to accommodate the substitute will be made by the contractor without a change in the contract price or contract time.

   c) No substitute shall be ordered or installed without the written approval of the engineer, who shall be the judge of equality.

d) Delay caused by obtaining approvals for substitute materials will not be considered justifiable grounds for an extension of construction time.

e) Should any work or materials, equipment, or products not conform to requirements of the drawings and specifications or become damaged during the progress of the work, such work or materials shall be removed and replaced together with any work disarranged by such alterations at any time before completion and acceptance of the project. All such work shall be done at the expense of the contractor. (See herein **Article 7**, paragraph 10.)

f) No materials or supplies for the work shall be purchased by the contractor or by a subcontractor subject to any chattel mortgage or under a conditional sale or other agreement by which an interest is retained by the seller. The contractor warrants that he has good title to all materials and supplies used by him in the work.

7) **Concerning Subcontractors**: The contractor will not employ any subcontractor, other person, or organization of the types referred to in herein **Article 2**, paragraph 10 (whether initially or as a substitute) against whom the owner or the engineer may have reasonable objection, nor will the contractor be required to employ any subcontractor against whom contractor has reasonable objection. The contractor will not make any substitution for any subcontractor who has been accepted by the owner and the engineer unless the engineer determines there is good cause for doing so.

8) **Contractor's Responsibility for (Direct and Indirect) Personnel:** The contractor shall be fully responsible for all acts and omissions of his subcontractors and of persons and organizations directly or indirectly employed by them and of persons and organizations for whose acts any of them may be liable to the same extent that contractor is responsible for the acts and omissions of persons directly employed by him. Nothing in the contract documents shall create any contractual relationship between owner or engineer and any subcontractor or other person or organization having a direct contract with contractor, nor shall it create any obligation on the part of owner or engineer to pay or to see to the payment of any moneys due any subcontractor or other person or organization, except as may otherwise be required by law. Owner or engineer may furnish to any subcontractor or other person or organization, to the extent practicable, evidence of amounts paid to contractor on account of specific work done in accordance with the schedule of values.

9) **Drawings Disassociation of Work Delegation:** The divisions and sections of the specifications and the identifications of any drawings shall not control the contractor in dividing the work among subcontractors or delineating the work to be performed by any specific trade.

10) **Binding Subcontractors to Contract:** The contractor agrees to bind specifically every subcontractor to the applicable terms and conditions of the contract documents for the benefit of the owner.

11) **Contractor and Subcontractor Agreement:** All work performed for the contractor by a subcontractor shall be pursuant to an appropriate agreement between the contractor and the subcontractor.

12) **Contractor's Responsibility When Delegating Work**

a) The contractor shall be responsible for the coordination of the trades, subcontractors, and material-men engaged upon contractor's work.

b) The contractor shall cause appropriate provisions to be inserted in all subcontracts relative to the work to bind subcontractors to the contractor by the terms of these general conditions and other contract documents insofar as applicable to the work of subcontractors and to give the contractor the same power as regards to terminating any subcontract that the owner may exercise over the contractor under any provisions of the contract documents.

c) The owner or engineer will not undertake to settle any differences between the contractor and his subcontractors or between subcontractors.

d) The subcontractor shall be replaced if and when directed in writing if, in the opinion of the engineer, any subcontractor on the project proves to be incompetent or otherwise unsatisfactory.

13) **Patent Fees and Royalties**: The contractor will pay all license fees and royalties and assume all costs incident to the use of any invention, design, process, or device that is the subject of patent rights or copyrights held by others. He will indemnify and hold harmless the owner and the engineer and anyone directly or indirectly employed by either of them from and against all claims, damages, losses, and expenses (including attorney's fees) arising out of any infringement of such rights during or after completion of the work, and shall defend all such claims in connection with any alleged infringement of such rights.

14) **Patent Rights and Royalties:** The contractor shall be responsible for determining the application of patent rights and royalties on materials, appliances, articles, and/or systems prior to bidding. However, he shall not be responsible for such determination on systems that do not involve purchase by him of materials, appliances, and articles.

15) **Permits:** The contractor will secure and pay for all construction permits and licenses and will pay all governmental charges and inspection fees necessary that are applicable at the time of his bid for the prosecution of the work. There will be no charges to the contractor when such charges are normally made by the owner and when so stated in the special conditions. The owner shall assist the contractor, when necessary, in obtaining such permits and licenses. The contractor will also pay all public utility charges.

16) **Laws and Regulations:** The contractor will give all notices and comply with all laws, ordinances, rules, and regulations applicable to the work. If the contractor observes that the specifications or drawings are at variance therewith, he will give the engineer prompt written notice thereof, and any necessary changes shall be adjusted by an appropriate modification. If the contractor performs any work knowing it to be contrary to such laws, ordinances, rules, and regulations, and without such notice to the engineer, he will bear all costs arising therefrom; however, it shall not be his primary responsibility to make certain that the drawings and specifications are in accordance with such laws, ordinances, rules, and regulations.

17) **Taxes:** Cost of all sales and other taxes for which the contractor is liable under the terms of the contract shall be included in the contract price stated by the contractor.

18) **Record Drawings:** The contractor will keep one record copy of all specifications, drawings, addenda, modifications, and shop drawings at the site in good order and annotated to show all changes made during the construction process. These complete drawings shall be available to the engineer and shall be delivered to him for the owner upon completion of the project. It shall be used for this purpose only.

19) **Safety and Protection:** The contractor will be responsible for initiating, maintaining, and supervising all safety precautions and programs in connection with the work. The contractor will take all necessary precautions for the safety of, and will provide the necessary protection to prevent damage, injury, or loss to

a) all employees on the work job and other persons who may be affected thereby;

b) all the work and all materials or equipment to be incorporated therein, whether in storage on or off the site, and

c) other property at the site or adjacent thereto, including trees, shrubs, lawns, walks, pavements, roadways, structures, and utilities not designated for removal, relocation, or replacement in the course of construction.

20) **Preventative Measures:** The contractor will designate a responsible member of his organization at the site whose duty shall be the prevention of accidents. This person shall be the contractor's superintendent unless otherwise designated in writing by the contractor to the owner.

21) **Emergencies:** In emergencies affecting the safety of persons or the work or property at the site or adjacent thereto, the contractor, without special instruction or authorization from the engineer or owner, is obligated to act at his discretion to prevent threatened damage, injury, or loss. He will give the engineer prompt written notice of any significant changes in the work or deviations from the contract documents caused thereby, and a change order shall thereupon be issued covering the changes and deviations involved. If the contractor believes that additional work done by him in an emergency which arose from causes beyond his control entitles him to an increase in the contract price or an extension of the contract time, he may make a claim therefore as provided herein in **Articles 11** and **12**.

22) **Shop Drawings and Samples:** After checking and verifying all field measurements, the contractor will submit to the engineer for review copies (or at the engineer's option, one reproducible copy) of all shop drawings in accordance with the accepted schedule of shop drawing submissions (see herein **Article 2**, paragraph 8), which shall have been checked by and stamped with the approval of the contractor. The data shown on the shop drawings will be complete with respect to dimensions, design criteria, materials of construction and the like to enable the engineer to review the information as required.

23) **Submittal of Samples:** The contractor will also submit to the engineer for review, with such promptness as to cause no delay in work, all samples required by the contract documents. All samples will have been checked by and stamped with the approval of the contractor, identified clearly as to material, manufacturer and pertinent catalog numbers, and the use for which intended.

24) **Drawing or Sample Deviations from Contract:** At the time of each submission, the contractor will, in writing, bring to the engineer's attention any deviations that the shop drawings or sample may have from the requirements of the contract documents.

25) **Engineer's Review of Submitted Drawings and Samples:** The engineer will review with reasonable promptness shop drawings and samples, but his review shall be only for conformance with the design concept of the project and for compliance with the information given in the contract documents. The review of a separate item as such will not indicate review of the assembly in which the item functions. The contractor will make any corrections required by the engineer and will return the required number of corrected copies of shop drawings and resubmit new samples until the review is satisfactory to the engineer. The contractor shall direct specific attention in writing or on resubmitted shop drawings to revisions other than the corrections called for by the engineer on previous submissions. The contractor's stamp of approval on any shop drawing or sample shall constitute a representation to the owner and the engineer that the contractor has either determined and verified all quantities, dimensions, field construction criteria, materials, catalogue numbers and similar data, or he assumes full responsibility for doing so and that he has reviewed or coordinated each shop drawing or sample with the requirements of the work and the contract documents.

26) **Commencement of Work of Submission(s):** No work requiring a shop drawing or sample submission shall be commenced until the submission has been reviewed and approved by the engineer. A copy of each shop drawing and each approved sample shall be kept in good order by the contractor at the site and shall be available to the engineer.

27) **Contractor's Responsibility of Submission(s):** The engineer's review of shop drawings or samples shall neither relieve the contractor from his responsibility for any deviations from the requirements of the contract documents unless the contractor has, in writing, called the engineer's attention to such deviation at the time of submission and the engineer has given written approval to the specific deviation, nor shall any review by the engineer relieve the contractor from responsibility for errors or omissions in the shop drawings.

28) **Site Clean-Up:** The contractor shall clean up behind the work as much as is reasonably possible as the work progresses. Upon completion of the work, and before acceptance of and final payment for the project by the owner, the contractor shall remove all his surplus and discarded materials, excavated material, and rubbish from the roadways, sidewalks, parking areas, lawns, and all adjacent property; shall clean his portion of work involved in any building under this contract so that no further cleaning by the owner is necessary prior to his

occupancy; shall restore all property, both public and private, that has been disturbed or damaged during the prosecution of the work, and shall leave the whole in a neat and presentable condition.

29) **Building Clean-Up**: Clean-up operations shall consistently be carried on by the contractor at all times to keep the premises free from accumulation of waste materials and rubbish. Upon completion of the work he shall remove all rubbish, tools, scaffolding, surplus materials, etc., from the building and shall leave his work "broom clean," or its equivalent, unless more exactly specified elsewhere in the contract. The general contractor shall do the following special cleaning for all trades upon completion of the work:

a) remove putty stains and paint from and wash and polish all glass. Do not scratch or otherwise damage glass.

b) remove all marks, stains, fingerprints and other soil and dirt from painted, stained, and decorated work.

c) remove all temporary protections and clean and polish floors.

d) clean and polish all hardware for all trades; this shall include removal of all stains, dust, dirt, paint, etc.

30) **General Clean-Up:** In case of dispute, the owner may remove the rubbish and charge the cost to the several contractors as the engineer shall determine to be just.

31) **Public Convenience and Safety:** The contractor shall, at all times, conduct the work in such a manner as to insure the least practicable obstruction to public travel. The convenience of the general public and of the residents along and adjacent to the area of the work shall be provided for in a satisfactory manner consistent with the operation and local conditions. "Street Closed" signs shall be placed immediately adjacent to the work in a conspicuous position at such locations as traffic demands. At any time that streets are required to be closed, the contractor shall notify law enforcement agencies, fire departments, and parties operating emergency vehicles before the street is closed and again as soon as it is opened. Access to fire hydrants and other fire extinguishing equipment shall be provided and maintained at all times.

32) **Sanitary Provisions:** The general contractor shall furnish necessary toilet conveniences secluded from public observation for use of all personnel on the work site, whether or not in his employ. They shall be kept in a clean and sanitary condition and shall comply with the requirements and regulations of the public authorities having jurisdiction. The general contractor shall commit no public nuisance. Temporary sanitary facilities shall be removed upon completion of the work and the premises shall be left clean.

33) **Indemnification**: The contractor will indemnify and hold harmless the owner and the engineer and their agents and employees from and against all claims, damages, losses and expenses including attorney's fees arising out of or resulting from the performance of work, provided that any such claim, damage, loss or expense is (a) attributable to bodily injury, sickness, disease or death, or to injury to or destruction of tangible property (other than work itself) including the loss of use resulting therefrom, and (b) caused in whole or in part by any negligent act or omission of the contractor, any subcontractor, anyone directly or indirectly employed by any of them or anyone for whose acts any of them may be liable, regardless of whether or not it is caused in part by a party indemnified hereunder.

34) **Claims Against Owner or Engineer:** In any and all claims against the owner or the engineer or any of their agents or employees, by an employee of the contractor, any subcontractor, anyone directly or indirectly employed by any of them or anyone for whose acts any of them may be liable, the indemnification obligation under herein **Article 6**, paragraph 33 shall not be limited in any way by any limitation on the amount or type of damages, compensation or benefits payable by or for the contractor or any subcontractor under workmen's compensation acts, disability benefit acts, or other employees benefit acts.

35) **Contractor's Liability Obligations:** The obligations of the contractor under herein **Article 6**, paragraph 34 shall not extend to the liability of the engineer's negligent acts, errors, or omissions or those of his employees or agents.

36) **Responsibility for Connecting to Existing Work:** It shall be the express responsibility of the contractor to connect his work to each part of the existing work or work previously installed as required by the drawings and specifications to provide a complete installation.

37) **Work in Street, Highway, and Other Rights-of-Way:** Excavation, grading, fill, storm drainage, paving, and any other construction or installations in rights-of-way of streets, highways, public carrier lines, utility lines (either aerial, surface or subsurface), etc., shall be done in accordance with requirements of federal, state, and local laws. The owner will be responsible for obtaining all permits necessary for the work. Upon completion of the work, contractor shall present to engineer certificates, in triplicate, from the proper authorities stating that the work has been done in accordance with their requirements.

a) The owner will cooperate with the contractor in obtaining action from any utilities or public authorities involved in the above requirements.

b) The engineer shall be responsible for obtaining elevations of curbs and gutters, pavements, storm drainage structures, and other such items as soon as grading operations are begun on the site and, in any case, sufficiently early in the construction period to prevent any adverse effect on the project.

i) Any variation from the requirements of paragraph 37(b) above shall be stated in the "Special Conditions."

38) **Cooperation with Governmental Departments, Public Utilities, Etc.:** The contractor shall be responsible for making all necessary arrangements with governmental departments, public utilities, public carriers, service companies, and corporations owning or controlling roadways, railways, water, sewer, gas, electrical, telephone, and telegraph facilities such as pavements, tracks, piping, wires, cables, conduits, poles, guys, etc., including incidental structures connected therewith that are encountered in the work so that such items may be properly shored, supported, and protected, or the contractor may relocate them if he so desires. The contractor shall give all proper notices, shall comply with requirements of such parties in the performance of his work, shall permit entrance of such parties on the project in order that they may perform their necessary work, and shall pay all charges and fees made by such parties for this work.

a) The contractor's attention is called to the fact that there may be delays on the project due to work to be done by governmental departments, public utilities, and others in repairing or moving poles, conduits, etc. The contractor shall cooperate with the above parties in every way possible so that the construction can be completed in the least possible time.

b) The contractor shall have made himself familiar with all codes, laws, ordinances, and regulations that in any manner affect those engaged or employed in the work, or materials and equipment used in or upon the work, or in any way affect the conduct of the work, and no plea of misunderstanding will be considered on account of his ignorance thereof.

39) **Use of Premises**: The contractor shall confine his apparatus, storage of materials, and operations of his workmen to limits indicated by law, ordinances, permits, and directions of engineer and owner, and shall not unnecessarily encumber any part of the site.

a) Contractor shall not overload or permit any part of any structure to be loaded with such weight as will endanger its safety, nor shall he subject any part of the work to stresses or pressures that will endanger it.

b) Contractor shall enforce owner's instructions in connection with signs, advertisements, fires, and smoking.

c) Contractor shall arrange and cooperate with owner in routing and parking of automobiles of his employees, subcontractors and other personnel, and in routing material delivery trucks and other vehicles to the project site.

40) **Protection of Existing Property Improvements:**: Any existing surface or subsurface improvements, such as pavements, curbs, sidewalks, pipes or utilities, footings or structures (including portions thereof), and/or trees and shrubbery not indicated on the drawings or noted in the specifications as being removed or altered shall be protected from damage during construction of the project. Any such improvements damaged during construction of the project shall be restored to a condition equal to that existing at time of award of contract.

41) **Temporary Heat:** The general contractor shall provide heat, fuel, and services as necessary to protect all work and materials within all habitable areas of permanent building construction for all contracts against injury from dampness and cold until final acceptance of all work and materials for the project --unless building is fully occupied by the owner prior to such acceptance in which case the owner shall assume all expenses of heating from date of full occupancy. In areas outside those covered above, each prime contractor shall be responsible for providing such temporary heat, fuel, and services as required to protect his work or shall make all necessary arrangements with the general contractor for providing such temporary heat, fuel, and services. Unless otherwise specifically permitted by stated special conditions, the permanent heating system shall not be used to provide temporary heat. Contractor's proposed methods of heating shall be submitted for approval.

ARTICLE 7

WORK by OTHERS

1) **Additional Related Work:** The owner may perform additional work related to the project by himself, or he may let other direct contracts thereof that shall contain general conditions similar to these herein. The contractor will afford the other contractors who are parties to such direct contracts (or the owner, if he is performing the additional work himself) reasonable opportunity for the introduction and storage of materials and equipment and the execution of work and shall properly connect and coordinate his work with theirs.

2) **Report of Defects or Deficiencies:** If any part of the contractor's work depends on proper execution or results upon the work of any such other contractor (or the owner), the contractor will promptly report to the engineer in writing any defects or deficiencies in such work that render it unsuitable for such proper execution and results.

3) **Altering the Work of Others:** The contractor will do all cutting, fitting, and patching of his work that may be required to make its several parts come together properly and fit it to receive or be received by such other work. The contractor will not endanger any work of others by cutting, excavating, or otherwise altering their work and will only cut or alter their work with the written consent of the engineer and of the other contractors whose work will be affected.

4) **Prior Written Notice of Additional Work:** If the performance of additional work by other contractors or the owner is not noted in the contract documents prior to the execution of the contract, written notice thereof shall be given to the contractor prior to starting any such additional work. If the contractor believes that the performance of such additional work by the owner or others involves him in additional expense or entitles him to an extension of the contract time, he may make a claim as provided herein in **Articles 11** and **12**.

5) **Contractor's Allowance for Work of Others:** Where practicable, the general contractor shall build around the work of other separate contractors or shall leave chases, slots, and holes as required to receive and to conceal within the general construction work the work of such other separate contractors as directed by them. Where such chases, slots, etc., are impracticable, the work shall require specific approval of the engineer.

6) **Necessary Alterations Not Built by General Contractor:** Necessary chases, slots, and holes not built or left by the general contractor shall be cut by the separate contractor requiring such alterations after approval of the general contractor. The general contractor shall do all patching and finishing of his work where cut by other contractors at the expense of such other contractors.

7) **Contractors Sharing of the Work Site:** Cooperation is required in the use of site facilities and in the detailed execution of the work. Each contractor shall coordinate his operations with those of the other contractors for the best interest of the work in order to prevent delay in the execution thereof.

8) **Monitoring Contractors Work:** Each contractor shall keep himself informed of the progress of the work of other contractors. Should lack of progress or defective workmanship on the part of other contractors interfere with his operations, the contractor shall notify the engineer immediately. Lack of such notice to the engineer will be construed as acceptance by the contractor for proper coordination of his own work.

9) **Contractor's Progress of Work Notice(s):** Each contractor shall give notice(s) of the progress of his work so as to allow other contractors adequate opportunity to properly direct and coordinate their work. The general contractor shall give notice(s) of the progress of his work so that work of other contractors, when required to be concealed, may be placed before the general construction work. All such notices shall be submitted (a) to the engineer with copies to other prime contractors on the project, and (b) sufficiently ahead of job progress to permit adequate time for the other prime contractors to coordinate their work.

10) **Notice Negligence and Other Liability:** The cost of extra work resulting from lack of notices, untimely notices, and failure to respond to notices, defective work, or lack of coordination shall be borne by the contractor responsible for such lack of notices, etc.

ARTICLE 8

OWNER'S RESPONSIBILITIES

1) **Communication:** The owner will issue all communications to the contractor through the engineer.

2) **Engineer's Termination:** In case of termination of the employment of the engineer, the owner will appoint an engineer against whom the contractor makes no reasonable objection and whose status under the contract documents shall be that of the former engineer. Any dispute in connection with such appointment shall be subject to arbitration, if mutually agreeable.

3) **Prompt Payments to Contractor:** The owner will promptly furnish the data required of him under the contract documents and shall promptly make payments to the contractor after they are due as provided herein in **Article 14**.

4) **Owner's Duties:** Owner's duties in respect of providing lands and easements and providing engineering surveys to establish reference points are set forth herein in **Article 4**. **Article 4**, paragraph 2 refers to the owner identifying and making available to contractor copies of surveys and investigation reports of subsurface and latent physical conditions at the site or otherwise affecting performance of the work, which has been relied upon by the engineer in preparing the drawings and specifications.

5) **Owner's Liability Responsibilities:** The owner's responsibilities in respect of liability and property insurance are set forth herein in **Article 5**, paragraph 4.

6) **Owner's Right to Request Changes:** In addition to owner's rights to request changes in the work in accordance with herein **Article 10**, the owner (especially in certain instances as provided in **Article 10**, paragraph 4) will be obligated to execute change orders.

7) **Owner's Right to Stop or Suspend Work:** In connection with the owner's right to stop or suspend work, see herein **Article 15**, paragraph 1. **Article 15**, paragraph 3 deals with the owner's right to terminate services of the contractor under certain circumstances.

8) **Owner's Use of Completed or Partially Completed Work:** The owner shall have the right to take possession of and use any completed or partially completed portions of the work, notwithstanding the fact that the time for completing the entire work or any portion thereof may not have expired, but such taking possession and use shall not be deemed an acceptance of any work not completed in accordance with the contract documents. If such prior use increases the cost of or delays the work, the contractor shall be entitled to such extra compensation or extension of time or both, except by prior agreement as the engineer may determine.

9) **Other Owner's Responsibility:** Owner's responsibility in respect of certain inspections, tests, and approvals is set forth herein in **Article 9**.

ARTICLE 9

ENGINEER'S STATUS DURING CONSTRUCTION

1) **Owner's Representative:** The engineer shall be the owner's representative during the construction period. The duties and responsibilities and the limitations of authority of the engineer as the owner's representative during construction are set forth herein in **Articles 1** through **17** of these "General Conditions" and shall not be extended without written consent of the owner and the engineer.

a) The engineer's decision in matters relating to aesthetics shall be final if within the terms of the contract documents.

b) Except as may be otherwise provided in this contract, all claims, counter-claims, disputes, and other matters in question between the owner and the contractor arising out of or relating to this agreement or the breach thereof will be decided by arbitration if the parties hereto mutually agree, or in a court of competent jurisdiction within the state in which the owner is located.

2) **Visits to Site:** The engineer will make periodic visits to the site to observe the progress and quality of the executed work and to determine, in general, if the work is proceeding in accordance with the contract documents. The engineer will not be required to make continuous on-site observations to check the quality or quantity of the work. The engineer's efforts will be directed toward ascertaining on behalf of the owner that the completed project will conform to the requirements of the contract documents. On the basis of his on-site observations as an experienced and qualified design professional, he will keep the owner informed of the progress of the work and will endeavor to guard the owner against defects and deficiencies in the work of contractors.

3) **Clarifications and Interpretations:** The engineer will issue with reasonable promptness such written clarifications or interpretations of the contract documents (in the form of drawings or otherwise) as he may determine necessary, which shall be consistent with or reasonably inferable from the overall intent of the contract documents. If the contractor believes that a written clarification and interpretation entitles him to an increase in the contract price or extension of contract time, he may make a claim thereof as provided herein in **Articles 11** and **12**.

4) **Measurement of Quantities:** All work completed under the contract will be measured by the engineer according to the United States Standard Measures. All linear surface measurements will be made horizontally or vertically as required by the item measured.

5) **Rejecting Defective Work:** The engineer will have authority to disapprove or reject work which is "defective" (which term is hereinafter used to describe work that is unsatisfactory, faulty, or defective, does not conform to the requirements of the contract documents, does not meet the requirements of any inspection, test, or approval referred to in the special conditions, or has been damaged prior to final acceptance). The

engineer will also have authority to require special inspection or testing of the work as provided in the special conditions, whether or not the work is fabricated, installed, or completed.

6) **Shop Drawings, Change Orders, and Payments:** In connection with the engineer's responsibility as to shop drawings and samples, see herein **Article 6**, paragraphs 25 through 27, inclusively.

7) **Engineer's Responsibility for Change Orders:** In connection with the engineer's responsibility for change orders, see herein **Articles 10, 11**, and **12**.

8) **Engineer's Responsibility Regarding Application for Payment:** In connection with the engineer's responsibilities in respect of "Application for Payment," etc., see herein **Article 14**.

9) **Resident Project Representative:** The owner or the engineer will provide on-site representation sufficient to guarantee that construction is in general compliance with the construction drawings and the contract specifications.

10) **Decisions on Disagreements:** The engineer will be the initial interpreter of the terms and conditions of the contract documents and the judge of the performance thereunder. In his capacity as interpreter and judge he will exercise his best efforts to insure faithful performance by both the owner and the contractor. He will not show partially to either and shall not be liable for the result of any interpretation or decision rendered in good faith. Claims, disputes, and other matters relating to the execution and progress of the work or the interpretation of or performance under the contract documents shall be referred initially to the engineer for decision, which he shall render in writing within a reasonable time.

11) **Right to Request Arbitration:** Either the owner or the contractor, if the other agrees, may request arbitration with respect to any such claim, dispute, or other matter that has been referred to the engineer, except any that have been waived by the making or acceptance of final payment as provided herein in **Article 14**, paragraph 11, and such arbitration is to be in accordance with herein **Article 16**. However, no request for arbitration of any such claim, dispute, or other matter shall be made until the earlier of (a) the date on which the engineer has rendered his decision or (b) the tenth day after the parties have presented their evidence to the engineer if the engineer has not rendered his written decision before that date. No request for arbitration shall be made later than thirty (30) days after the date on which the engineer rendered his written decision in respect of the claim, dispute, or other matter to which arbitration is sought, and the failure to request arbitration within said thirty (30) days' period shall result in the engineer's decision being final and binding upon the owner and the contractor. If the engineer renders a decision after arbitration proceedings have been initiated, such decision may be entered as evidence but shall not supersede the arbitration proceedings except where the decision is acceptable to the parties concerned.

12) **Limitations of Engineer's Responsibilities to Contractor and Others:** Neither the engineer's authority to act under this herein **Article 9** nor any decision made by him in good faith either to exercise or not exercise such authority shall give rise to any duty or responsibility of the engineer to the contractor, any subcontractor, any of their agents or employees or any other person performing any of the work.

13) **Engineer's Limitations of Responsibility:** The engineer will not be responsible for the construction means, methods, techniques, sequences or procedures, or the safety precautions and programs incident thereto, and he will not be responsible for the contractor's failure to perform the work in accordance with the contract documents.

14) **Engineer's Limitations of Responsibility for Omissions:** The engineer will not be responsible for the acts or omissions of the contractor, or any subcontractors, or any of his or their agents or employees, or any other persons performing any of the work.

ARTICLE 10

CHANGES IN WORK

1) **Owner's Right to Initiate Change Orders:** Without invalidating the agreement, the owner may, at any time or from time-to-time, order additions, deletions, or revisions in the work; these will be authorized by change orders. Upon receipt of a change order, the contractor will proceed with the work involved. All such work shall be executed under the applicable conditions of the contract documents. If any change order causes an increase or decrease in the contract price or an extension or shortening of the contract time, an equitable adjustment will be made as provided herein in **Article 11** or **Article 12**. A change order signed by the contractor indicates his agreement therewith.

2) **Authorization of Minor Changes or Alterations :** The engineer may authorize minor changes or alterations in the work not involving extra cost and not inconsistent with the overall intent of the contract documents. These changes and/or alterations may be accomplished by a field order. If the contractor believes that any minor change or alteration authorized by the engineer entitles him to an increase in the contract price or extension of contract time, the contractor may make a claim thereof as provided herein in **Articles 11** and **12**.

3) **Unauthorized Additional Work:** Additional work performed by the contractor without authorization of a change order will not entitle him to an increase in the contract price or an extension of the contract time except in the case of an emergency as provided herein in **Article 6**, paragraph 21 and except as provided herein in **Article 10**, paragraph 2.

4) **Execution of Change Order(s):** The owner will execute appropriate change orders prepared by the engineer covering changes in the work to be performed as provided herein in **Article 4**, paragraph 4, and work performed in an emergency as provided herein in **Article 6**, paragraph 21 and any other claim of the contractor for a change in the contract time or the contract price, which is approved by the engineer.

5) **Notification of Surety of Changes:** It is the contractor's responsibility to notify his surety of any changes affecting the general scope of the work or change in the contract price and the amount of the applicable bonds shall be adjusted accordingly. The contractor will furnish proof of such adjustment to the owner.

ARTICLE 11

CHANGE of CONTRACT PRICE

1) **Total Compensation Payable to Contractor:** The contract price constitutes the total compensation payable to the contractor for performing the work. All duties, responsibilities, and obligations assigned to or undertaken by the contractor shall be at his expense without changing the contract price.

2) **Owner's Written and/or Verbal Change Orders**

a) The owner may, at any time and without notice to the sureties, by written order designated or indicated to be a change order, make any change in the work within the general scope of the contract, including but not limited to changes: (a) in the specifications (including drawings and designs); (b) in the method or manner of performance of the work; (c) in the owner-furnished facilities, equipment, materials, services, or site; or (d) directing acceleration in the performance of the work, and/or (e) directing the contractor to stop work for a stated time.

b) Any other written order or an oral order (which terms as used in this paragraph shall include direction, instruction, interpretation, or determination) from the owner, which causes any such change, shall be treated

as a change order under this clause, provided that the contractor gives the owner written notice stating the date, circumstances, and source of the order and that the contractor regards the order as a change order.

c) Except as herein provided, no order, statement, or conduct of the owner shall be treated as a change under this clause or entitle the contractor to an equitable adjustment hereunder.

d) If any change under this clause causes an increase or decrease in the contractor's cost of, or the time required for, the performance of any part of the work under this contract, whether or not changed by any order, an equitable adjustment shall be made and the contract modified in writing accordingly: Provided, however, that except for claims based on defective specifications, no claim for any change under above listed paragraph 2(b) shall be allowed for any costs incurred more than twenty (20) days before the contractor gives written notice as therein required. And provided further that in the case of defective specifications for which the owner is responsible, the equitable adjustment shall include any increased cost reasonably incurred by the contractor in attempting to comply with such defective specifications.

e) If the contractor intends to assert a claim for an equitable adjustment under this clause, he must, within 30 days after receipt of a written change order under above listed paragraph 2(a) or the furnishing of a written notice under above listed paragraph 2(b), submit to the owner a written statement setting forth the general nature and monetary extent of such claim, unless this period is extended by the owner. The statement of claim hereunder may be included in the notice under above listed paragraph 2(b). If not received by the owner within 30 days, the owner may choose to reject the contractor's information relating to such claim without review.

f) No claim by the contractor for an equitable adjustment hereunder shall be allowed if asserted after final payment under this contract.

3) **Determination of Change Order Compensation:** The compensation of any portion of the work covered by a change order or of any claim for an increase or decrease in the contract price shall be determined in one of the following ways:

a) where the change order involved is covered by unit prices contained in the contract documents by application of unit prices to the quantities of the items involved. Should the items (by quantity) be increased or decreased by more than 15 percent (15%) from that stipulated in the contract documents and the total dollar amount is significant (greater than ten thousand dollars [$10,000]), either the owner or the contractor may request to negotiate a new unit price for the quantities in excess of the 15 percent (15%) window to protect their financial interest in the project.

b) by negotiated lump sum.

c) the actual cost for labor, direct overhead, materials, supplies, equipment, and other services necessary to complete the work plus a fixed amount to be agreed upon to cover the cost of general overhead and profit to be negotiated.

4) **Defining "Cost of the Work":** The term "Cost of the Work" (also "Cost of Work") means the sum of all costs necessarily incurred and paid by the contractor in the proper performance of the work. Except as otherwise may be agreed to in writing by owner, such costs shall be in amounts no higher than those prevailing in the locality of the project shall include only the following items and shall not include any of the costs itemized herein in **Article 11**, paragraph 5:

a) payroll costs for employees in the direct employ of contractor in the performance of the work under schedules of job classifications agreed upon by owner and contractor. Payroll costs for employees not employed full time on the work shall be apportioned on the basis of their time spent on the work. Payroll costs shall include, but not be limited, to, salaries and wages plus the cost of fringe benefits, which shall include social security contributions, unemployment, excise and payroll taxes, workmen's compensation, health and retirement benefits, bonuses, sick leave, vacation, and holiday pay applicable thereto. Such

employees shall include superintendents and foremen at the site. The expenses of performing work after regular working hours, on Sunday, or legal holidays shall be included in the above to the extent authorized by owner.

b) cost of all materials and equipment furnished and incorporated in the work, including costs of transportation and storage thereof, and manufacturers' field services required in connection therewith. All cash discounts shall accrue to contractor unless owner deposits funds with contractor with which to make payments, in which case the cash discounts shall accrue to owner. All trade discounts, rebates and refunds, and all returns from sale of surplus materials and equipment shall accrue to owner, and contractor shall make provisions so that they may be obtained.

c) payments made by contractor to the subcontractors for work performed by subcontractors. If required by owner, contractor shall obtain competitive bids from subcontractors acceptable to him and shall deliver such bids to owner who will then determine with the advice of engineer which bids will be accepted. If a subcontract provides that the subcontractor is to be paid on the basis of "Cost of Work" plus a fee, the cost of the work shall be determined in accordance with herein **Article 11**, paragraphs 4 and 5. All subcontracts shall be subject to the other provisions of the contract documents insofar as applicable.

d) costs of special consultants (including, but not limited to, engineers, architects, testing laboratories, surveyors, lawyers, and accountants) employed for services specifically related to the work.

e) supplemental costs including the following:

i) the proportion of necessary transportation, traveling, and subsistence expenses of contractor's employees incurred in discharge of duties connected with the work.

ii) cost, including transportation and maintenance, of all materials, supplies, equipment, machinery, appliances, office, and temporary facilities at the site and hand tools not owned by the workmen that are consumed in the performance of the work, and cost less market value of such items used but not consumed, which remain the property of contractor.

iii) rentals of all construction equipment and machinery and the parts thereof whether rented from contractor or others in accordance with rental agreements approved by owner with the advise of engineer, and the costs of transportation, loading, unloading, installation, dismantling and removal thereof - all in accordance with terms of said rental agreements. The rental of any such equipment, machinery, or parts shall cease when the use thereof is no longer necessary for the work.

iv) sales, use, or similar taxes related to the work and for which contractor is liable, imposed by any governmental authority.

v) deposits lost for causes other than contractor's negligence, royalty payments, and fees and licenses. Costs for permits and licenses must be shown as a separate item.

vi) losses, damages, and expenses, not compensated by insurance or otherwise, sustained by contractor in connection with the execution of, and to, the work, provided they have resulted from causes other than the negligence of contractor, any subcontractor, or anyone directly or indirectly employed by any of them or for whose acts any of them may be liable. Such losses shall include settlements made with the written consent and approval of owner. No such losses, damages, and expenses shall be included in the cost of the work for the purpose of determining contractor's fee. If, however, any such loss or damage requires reconstruction and contractor is placed in charge thereof, he shall be paid for his services a fee proportionate to that stated herein in **Article 11**, paragraph 6(b).

vii) the cost of utilities, fuel, and sanitary facilities at the site.

viii) minor expenses such as telegrams, long distance telephone calls, telephone service at the site, expressage, and similar petty cash items in connection with the work.

ix) cost of premiums for additional bonds and insurance required because of changes in the work.

5) **Limitations Regarding "Cost of Work":** The term "Cost of Work" shall not include any of the following:

a) payroll costs and other compensation of contractor's officers, executives, principals (of partnership and sole proprietorships), general managers, engineers, architects, estimators, lawyers, auditors, accountants, purchasing and contracting agents, expediters, timekeepers, clerks, and other personnel employed by contractor, whether at the site, or in his principal, or a branch office for general administrator of the work and not specifically included in the schedule referred to herein in **Article 11**, subparagraph 4(a) - all of which are to be considered administrative costs covered by the contractor's fee.

b) expenses of contractor's principal and branch offices other than his office at the site.

c) any part of contractor's capital expenses, including interest on contractor's capital employed for the work and charges against contractor for delinquent payments.

d) cost of premiums for all bonds and for all insurance policies whether or not contractor is required by the contract documents to purchase and maintain the same (except as otherwise provided herein in **Article 11**, subparagraph 4(e)ix.)

e) costs due to the negligence of contractor, any subcontractor, or anyone directly or indirectly employed by any of them or for whose acts any of them may be liable, including but not limited to the correction of defective work, disposal of materials or equipment wrongly supplied, and making good any damage to property.

f) other overhead or general expense costs of any kind and the costs of any item not specifically and expressly included herein in **Article 11**, paragraph 4.

6) **Determining Contractor's Fee:** The contractor's fee, which shall be allowed to contractor for his overhead and profit, shall be determined as follows:

a) a mutually acceptable firm, fixed price; or if none can be agreed upon,

b) a mutually acceptable fixed fee based on the estimate of the various portions of the "Cost of Work."

7) **Credits from Contractor to Owner:** The amount of credit to be allowed by contractor to owner for any such change that results in a net decrease in cost will be the amount of the actual net decrease. When both additions and credits are involved in any one charge, the net shall be computed to include overhead and profit, identified separately, for both additions and credits.

8) **Itemizing Cost:** Whenever the cost of any work is to be determined pursuant to herein **Article 11**, paragraphs 4 and 5, contractor will submit in form prescribed by engineer an itemized cost break-down together with supporting data.

9) **Allowances:** It is understood that the contractor has included in the contract price all allowances so named in the contract documents and shall cause the work so covered to be done by such material-men, suppliers, or subcontractors and for such sums within the limit of the allowances as the engineer may approve. Upon final payment, the contract price shall be adjusted as required and an appropriate change order issued. The contractor agrees that the original contract price includes such sums as he deems proper for costs and profit on account of cash allowances. No demand for additional cost or profit in connection therewith will be allowed.

a) These allowances shall cover the cost of the contractor less any applicable trade discount of the materials and equipment required by the allowance delivered at the site and all applicable taxes.

b) The contractor's costs for unloading and handling on the site: labor, installation costs, overhead, profit, and other expenses contemplated for the original allowance shall be included in the contract price and not in the allowance.

c) Whenever the cost as described in above listed **Article 11**, paragraph 9(a) is more or less than the allowance, the contract price shall be adjusted accordingly by change order. The amount of the change order will recognize changes, if any, in handling costs on the site: labor, installation costs, overhead, profit, and other expenses except that whenever unit price allowances are stipulated for brick, the change order will not include any cost as described in above listed **Article 11**, paragraph 5.

ARTICLE 12

CHANGE OF CONTRACT TIME

1) **Contract Time Change Order:** The contract time may only be changed by a change order. Any claim for an extension in the contract time shall be based on written notice delivered to owner and engineer within ten (10) days of the occurrence of the event giving rise to the claim. Notice of the extent of the claim with supporting data shall be delivered within forty-five (45) days of such occurrence unless engineer allows an additional period of time to ascertain more accurate data. All claims for adjustment in the contract time shall be determined by engineer if owner and contractor cannot otherwise agree. Any change in the contract time resulting from any such claim shall be incorporated in a change order.

2) **Extended Contract Time Requirements:** The contract time will be extended in an amount equal to time lost due to delays beyond the control of contractor if he makes a claim therefore as provided herein in **Article 12**, paragraph 1. Such delays shall include, but not be restricted to acts or neglect by any separate contractor employed by owner, fires, floods, labor disputes, epidemics, abnormal weather conditions, or acts of God.

3) **Binding Time Limits:** All time limits stated in the contract documents are of the essence of the agreement. The provisions of this herein **Article 12** shall not exclude recovery for damages (including compensation for additional professional services) for delay by either party.

4) **Claims Due to Drawing(s) Delays:** No claim for delay shall be allowed because of failure to furnish drawings until two weeks after demand for such drawings and not then unless such claim be reasonable.

5) **Other Damage Recovery Rights:** This **Article 12** does not exclude the recovery of damages for delay by either party under other provisions in the contract documents.

ARTICLE 13

GUARANTY

Contractor's Guaranty Requirements: The contractor shall guarantee all materials and equipment furnished and work performed for a period of one (1) year from the date of substantial completion. The contractor warrants and guarantees for a period of one (1) year from the date of substantial completion of the system that the completed system is free from all defects due to faulty materials or workmanship and the contractor shall promptly make such corrections as may be necessary by reason of such defects including the repairs of any damage to other parts of the system resulting from such defects. The owner will give notice of observed defects with reasonable promptness. In the event that the contractor should fail to make such repairs, adjustments, or the work that may be made necessary by

such defects, the owner may do so and charge the contractor the cost thereby incurred. The performance bond shall remain in full force and effect through the guarantee period.

ARTICLE 14

PAYMENTS AND COMPLETION

1) **Payments to Contractor:** At least ten (10) days before each progress payment falls due (but not more often than once a month), the contractor will submit to the engineer a partial payment estimate filled out and signed by the contractor covering the work performed during the period covered by the partial payment estimate and supported by such data as the engineer may reasonably require. If a payment is requested on the basis of materials and equipment not incorporated in the work but delivered and suitably stored at or near the site, the partial payment estimate shall also be accompanied by such supporting data, satisfactory to the owner. The engineer will, within ten (10) days after receipt of each partial payment estimate, either indicate in writing his approval of payment and present the partial payment estimate to the owner, or return the partial payment estimate to the contractor indicating in writing his reasons for refusing to approve payment. In the latter case, the contractor may make the necessary corrections and resubmit the partial payment estimate. The owner will, within ten (10) days of presentation to him of an approved partial payment estimate, pay the contractor a progress payment on the basis of the approved partial payment estimate. The owner shall retain a portion of the amount otherwise due the contractor in accordance with Section 31-5-33 of the Mississippi Code.

2) **Contractor's Warranty of Title:** The contractor warrants and guarantees that title to all work, materials, and equipment covered by an "Application for Payment," whether incorporated in the project or not, will have passed to the owner prior to the making of the "Application for Payment" free and clear of all liens, claims, security, interests and encumbrances (hereafter in these general conditions referred to as "Liens") and that no work, materials, or equipment covered by an "Application for Payment" will have been acquired by the contractor or by any other person performing the work at the site or furnishing materials and equipment for the project, subject to an agreement under which an interest therein or encumbrance thereon is retained by the seller or otherwise imposed by the contractor or such other person.

3) **Approval of Payments:** The engineer's approval of any payment requested in an "Application for Payment" shall constitute a representation by him to the owner based on the engineer's on-site observations of the work in progress as an experienced and qualified design professional and on his review of the "Application for Payment" and the supporting data that the work has progressed to the point indicated; that, to the best of his knowledge, information, and belief, the quality of the work is in accordance with the contract documents (subject to an evaluation of the work is a functioning project upon substantial completion, to the results of any subsequent tests called for in the contract documents and any qualifications stated in his approval); and that the contractor is entitled to payment of the amount approved. However, by approving any such payment the engineer shall not thereby be deemed to have represented that he made exhaustive or continuous on-site observations to check the quality or the quantity of the work; or that he has reviewed the means, methods, techniques, sequences, and procedures of construction; or that he has made any examination to ascertain how or for what purpose the contractor has used the moneys paid or to be paid to him on account of the contract price; or that title to any work, materials, or equipment has passed to the owner free and clear of any liens.

4) **Contractor's Certification Statement:** The contractor shall make the following certification on each request for payment: "I hereby certify that the labor and materials listed on this request for payment have been used in the construction of this work or that all materials included in this request for payment and not yet incorporated into the construction are now on the site or stored at an approved location, and payment received from the last request for payment has been used to make payments to all first tier subcontractors and suppliers except as listed below."

5) **Engineer's Final Payment Approval:** The engineer's approval of final payment shall constitute an additional representation by him to the owner that the conditions precedent to the contractor's being entitled to final payment as set forth herein in **Article 14**, paragraph 11 have been fulfilled.

6) **Engineer's Right to Refuse Payment Approval:** The engineer may refuse to approve the whole or any part of any payment if, in his opinion, he is unable to make such representations to the owner as above listed in **Article 14**, paragraph 5. He may also refuse to approve any such payment, or because of subsequently discovered evidence or the results of subsequent inspection or tests, nullify any such payment previously approved, to such extent as may be necessary in his opinion to protect the owner from loss because:

a) the work is defective, or completed work has been damaged requiring connection or replacement;

b) the work for which payment is requested cannot be verified;

c) claims or liens have been filed, or there is reasonable evidence indicating the probable filing thereof;

d) the contract price has been reduced because of modifications;

e) the owner has been required to correct defective work or complete the work in accordance herein with **Article 13**, paragraph 1;

f) of unsatisfactory prosecution of the work, including failure to clean up as required by herein **Article 6**, paragraphs 28, 29 and 30;

g) of persistent failure to cooperate with other contractors on the project and persistent failure to carry out the work in accordance with the contract documents;

h) of liquidated damages payable by the contractor; or

i) of any other violation of or failure to comply with the provisions of the contract documents.

7) **Owner's Use of Completed or Partially Completed Work:** Prior to substantial completion, the owner, with the approval of the engineer and with the concurrence of the contractor, may use any completed or substantially completed portions of the work. Such use shall not constitute an acceptance of such portions of the work.

8) **Owner's Right to Entry:** The owner shall have the right to enter the premises for the purpose of doing work not covered by the contract documents. This provision shall not be construed as relieving the contractor of the sole responsibility for the care and protection of the work or the restoration of any damaged work except such as may be caused by agents or employees of the owner.

9) **Engineer's Certificate:** Upon completion and acceptance of the work the engineer shall issue a certificate attached to the final payment request that the work has been accepted by him under the conditions of the contract documents. The entire balance found to be due the contractor including the retained percentages, but except such sums as may be lawfully retained by the owner, shall be paid to the contractor within sixty (60) days of completion and acceptance of the work.

10) **Contractor's Indemnification Requirements to Owner:** The contractor will indemnify and save the owner or the owner's agents harmless from all claims growing out of the lawful demands of subcontractors, laborers, workmen, mechanics, material-men, and furnishes of machinery and parts thereof, equipment, tools, and all supplies incurred in the furtherance of the performance of the work. The contractor shall, at the owner's request, furnish satisfactory evidence that all obligations of the nature designated above have been paid, discharged, or waived. If the contractor fails to do so, the owner may, after having notified the contractor, either pay unpaid bills or withhold from the contractor's pay from the contractor's unpaid compensation a sum

of money deemed reasonably sufficient to pay any and all such lawful claims until satisfactory evidence is furnished that all liabilities have been fully discharged whereupon payment to the contractor shall be resumed in accordance with the terms of the contract documents, but in no event shall the provisions of this sentence be construed to impose any obligations upon the owner to either the contractor, his surety, or any third party. In paying any unpaid bills of the contractor, any payment so made by the owner shall be considered as a payment made under the contract documents by the owner to the contractor and the owner shall not be liable to the contractor for any such payments made in good faith.

11) **Acceptance of Final Payment as Release:** The acceptance by the contractor of final payments shall be and operate as a release to the owner of all claims and all liability to the contractor other than claims in stated amounts as may be specifically excepted by the contractor for all things done or furnished in connection with his work and for every fact and neglect of the owner and others relating to or arising out of his work. Any payment, however, final or otherwise, shall not release the contractor or his sureties from any obligations under the contract documents or the performance bond and payment bonds.

ARTICLE 15

SUSPENSION OF WORK AND TERMINATION

1) **Owner May Suspend Work:** The owner may, at any time and without cause, suspend the work or any portion thereof for a period of not more than ninety (90) days by notice in writing to the contractor and the engineer, which shall fix the date on which work shall be resumed. The contractor will resume the work on the date so fixed. The contractor will be allowed an increase in the contract price or an extension of the contract time, or both, directly attributable to any suspension if he makes claim therefore as provided herein in **Articles 11** and **12**.

2) **Work During Inclement Weather:** No work shall be done under these specifications except by permission of the owner when the weather is unfit for good and careful work to be performed. Should the severity of the weather continue, the contractor, upon the direction of the owner, shall suspend all work until instructed to resume operations by the owner and the contract time shall be extended to cover the duration of the order. Work damaged during the periods of suspension due to inclement weather shall be repaired and/or replaced by the contractor. Any compensation for repairs or replacements shall be subject to approval of the owner.

3) **Owner May Terminate:** If the contractor is adjudged bankrupt or insolvent, or if he makes a general assignment for the benefit of his creditors, or if a trustee or receiver is appointed for the contractor or for any of his property, or if he files a petition to take advantage of any debtor's act or to reorganize under the bankruptcy or similar laws, or if he repeatedly fails to supply sufficient skilled workman or suitable materials or equipment, or if he repeatedly fails to make prompt payments to subcontractors or for labor, materials, and/or equipment, or he disregards laws, ordinances, rules regulations or orders of any public body having jurisdiction, or if he disregards the authority of the engineer, or if he otherwise violates any provision of the contract documents, then the owner may, without prejudice to any other right or remedy and after giving the contractor and his surety seven (7) days written notice, terminate the services of the contractor and take possession of the project and of all materials, equipment, tools, construction equipment, and machinery thereon owned by the contractor and finish the work by whatever method he may deem expedient. In such case the contractor shall not be entitled to receive any further payment until the work is finished. If the unpaid balance of the contract price exceeds the direct and indirect costs of completing the project, including compensation for additional professional services, such excess shall be paid to the contractor. If such costs exceed such unpaid balance, the contractor or the surety will pay the difference to the owner. Such costs incurred by the owner will be determined by the engineer and incorporated in a change order.

4) **Rights of Owner against Terminated Contractor:** Where the contractor's services have been so terminated by the owner, said terminations shall not affect any rights of the owner against the contractor then existing or

which may thereafter accrue. Any retention or payment of moneys by the owner due the contractor will not release the contractor from liability.

5) **Owner's Right to Abandon Project:** Upon seven (7) days written notice to the contractor and the engineer, the owner may, without cause and without prejudice to any other right or remedy, elect to abandon the project and terminate the agreement. In such case, the contractor shall be paid for all work executed and any expenses sustained plus a reasonable profit.

6) **Removal of Equipment:** In the case of termination of this contract before completion for any cause whatever, the contractor, if notified to do so by the owner, shall promptly remove any part or all of his equipment and supplies from the property of the owner. Should the contractor not remove such equipment and supplies, the owner shall have the right to remove them at the expense of the contractor. Equipment and supplies shall not be construed to include such items for which the contractor has been paid in whole or in part.

7) **Contractor May Stop Work or Terminate:** If, through no act or fault of the contractor, the work is suspended for a period of more than ninety (90) days by the owner, or under an order of court or other public authority, or the engineer fails to act on any "Application for Payment" within sixty (60) days after it is submitted, or the owner fails to pay the contractor any sum approved by the engineer or awarded by arbitrators within sixty (60) days of its approval and presentation, then the contractor may, upon seven (7) days written notice to the owner and the engineer, terminate the agreement and recover from the owner payment for all work executed and any expense sustained plus a reasonable profit. In addition and in lieu of terminating the agreement, if the engineer has failed to act on an "Application for Payment" or the owner has failed to make any payment as aforesaid, the contractor may upon seven (7) days notice to the owner and the engineer stop the work until he has been paid all amounts then due.

8) **Owner Furnished Equipment:** In case the owner furnishes equipment to the contractor to install but fails to deliver it to the contractor as required by supplementary or special conditions, and in case such failure causes the contractor additional expense or need for extension of time, the contractor may make such claims upon the owner and obtain adjustments as provided herein.

9) **Liquidated Damages:** If the contractor shall fail to complete the work within the contract time or extension of time granted by the owner, then the contractor will pay to the owner the amount for liquidated damages as shown on his bid for each calendar day that the contractor shall be in default after the time stipulated in the contract documents.

ARTICLE 16

ARBITRATION

1) **16.1 Arbitration Standards and Rules:** All claims, disputes and other matters in question arising out of, or related to, this agreement or the breach thereof except for claims which have been waived by the making or acceptance of final payment as provided herein by **Article 14**, paragraph 11, shall be decided by arbitration, if all parties mutually agree, in accordance with the "Construction Industry Arbitration Rules of the American Arbitration Association" then obtaining, or in a court of competent jurisdiction. This agreement so to arbitrate shall be specifically enforceable under the prevailing arbitration law. The award rendered by the arbitrators shall be final, and judgment may be entered upon it in any court having jurisdiction thereof. The arbitration decision must present findings of fact, conclusions of law, basis of award, and rationale.

2) **Notice of Arbitration Requirements:** Notice of the request for arbitration shall be filed in writing with the other party to the agreement and with the American Arbitration Association, if both parties mutually agree to arbitration, and a copy shall be filed with the engineer. The request for arbitration shall be made within the thirty (30) day period specified herein in **Article 9**, paragraph 11 where applicable, and in all other cases

within a reasonable time after the claim, dispute, or other matter in question has arisen and in no event shall it be made after institution of legal or equitable proceedings based on such claim, dispute, or other matter in question would be barred by the applicable statute of limitations.

3) **Arbitration Affects on Work:** The contractor will carry on the work and maintain the progress schedule during any arbitration proceedings unless otherwise agreed by him and the owner in writing.

ARTICLE 17

MISCELLANEOUS

1) **Recognized Delivery of Notice(s):** Whenever any provision of the contract documents requires the giving of written notice it shall be deemed to have been validly given if delivered in person to the individual or to a member of the firm or to an officer of the corporation for whom it is intended or if delivered at or sent by registered or certified mail, postage prepaid to the last business address known to him who gives the notice.

2) **Owner's Failure to Pay Contractor:** If the owner fails to make payment sixty (60) days after approval by the engineer, in addition to other remedies available to the contractor, there shall be added to each such progress payment, interest at one percent (1%) per month commencing on the first day after said payment is due and continuing until the payment is received by the contractor.

3) **Engineer's Property:** All specifications, drawings, and copies thereof furnished by the engineer shall remain the engineer's property. They shall not be used on another project, and, with the exception of those sets which have been signed in connection with the execution of the agreement, shall be returned to him on request upon completion of the project.

4) **Non-Limiting Rights and Remedies by Herein Identified Documents:** The duties and obligations imposed by these general conditions, special conditions, and supplemental general conditions and the rights and remedies available hereunder, and, in particular but without limitation, the warranties, guarantees, and obligations imposed upon contractor and those in the special conditions and the rights and remedies available to owner and engineer there under shall be in addition to, and shall not be construed in any way as a limitation of, any rights and remedies available to them which are otherwise imposed or available by law, by special guarantee, or be other provisions of the contract documents.

5) **Notice of Injury or Damage Claim** Should the owner or the contractor suffer injury or damage to his/its person or property because of any error, omission or act of the other or of any of his/its employees or agents or others for whose acts he/it is legally liable, claim shall be made in writing to the other party within a reasonable time of the first observance of such injury or damage.

6) **Laws that Supersede Contract Documents:** The contract documents shall be governed by the law of the place (location) of the project.

7) **Practicable Schedule:** The contractor shall within five (5) days or within such time as determined by the owner after date of commencement of work prepare and submit to the owner for approval a practicable schedule showing the order in which the contractor proposes to carry on the work, the date on which he will start the several salient features (including procurement of materials, plans and equipment), and the contemplated dates for completing the same. The schedule shall be in the form of a progress chart of suitable scale to indicate approximately the percentage of work scheduled for completion at any time. The contractor shall enter on the chart the actual progress at such intervals as directed by the owner and shall immediately deliver to the owner three (3) copies thereof. If the contractor fails to submit a progress schedule within the time herein prescribed, the owner may withhold approval of progress payment estimates until such time as the contractor submits the required progress schedule.

8) **Falling behind the Progress Schedule:** If, in the opinion of the owner, the contractor falls behind the progress schedule, the contractor shall take such steps as may be necessary to improve his progress and the owner may require him to increase the number of shifts or overtime operations, days of work, or the amount of construction plant, or update the progress schedule to reflect increased production for meeting the completion date, or all of them, and to submit for approval such supplementary schedule or schedules in chart form as may be deemed necessary to demonstrate the manner in which the agreed rate of progress will be regained, all without additional cost to the owner.

9) **Failure of Contractor to Comply with Owner Requirements:** Failure of the contractor to comply with the requirements of the owner under this provision shall be grounds for determination by the owner that the contractor is not prosecuting the work with such diligence as will insure completion within the time specified. Upon such determination, the owner may terminate the contractor's right to proceed with the work or any separable part thereof in accordance with the clause of the contract entitled, "Termination for Default-Damages for Delay – Time Extensions."

10) **Failure to Complete the Work on Time:** Should the contractor fail to complete the work within the specified time or within any extra time allowed under these specifications, a sum of money determined by the following schedule shall be deducted from any funds due the contractor. The owner shall have the right to recover the said sum or sums from the contractor or from the surety or from both. The amounts of these deductions are to cover the liquidated damages to the owner incurred by additional or other expenses due to the failure of the contractor to complete the work or any part of the work within the time specified, and such deductions are not to be considered penalties as stated in the Contract Documents.

11) **Liquidated Damages:** The damages indicated in the contract documents shall be considered as liquidated damages for the loss to the owner on account of the expense due to the employment of engineers and their assistants and to any others expenses incurred after the expiration of the contract time as determined by the engineer.

12) **Laws that Supersede Contract Documents** The contract documents shall be governed by the law of the place (location) of the project.

MEASUREMENT AND PAYMENT

Measurement and Payment for the following bid items shall be as described and shall include all material, equipment, labor, testing, etc. to install and make operational a complete water system as detailed on the contract drawings and as specified in the contract documents.

1) **DUCTILE IRON WATER LINE, CLASS 350:** Payment for installation of ductile iron water main shall include furnishing and installing all pipe, trenching, compaction of required bedding and backfill excavation, disposal of excess excavated material, sheeting, shoring, bracing, dewatering, testing, fittings, pavement repair, reducers, flushing the system and related items not specifically covered under other pay items. Length shall be determined by the measured distance of pipe installed and accepted.

2) **STEEL CASING:** Payment for installation of bored or open cut steel casing shall include furnishing and installing all steel pipe, spacers, end caps, excavating, compaction of backfill, disposal of excess excavated material, sheeting, shoring, bracing, dewatering, testing and related items not specifically covered under other pay items. Length shall be determined by the measured distance of casing pipe installed and accepted.

3) **TIE-IN:** Payment for installation of tie-in shall include furnishing gate valves reducers, fittings, trenching, excavating, compaction of backfill, blocking, disposal of excess excavated material, sheeting, shoring, bracing, dewatering, testing, flushing and related items not specifically covered under other pay items. Pay shall be determined per each as determined by size of line existing for tie-in.

4) **GATE VALVES:** Payment for installation of gate valves shall include furnishing valves, valve boxes, trenching, excavating, compaction of backfill, blocking, disposal of excess excavated material, sheeting, shoring, bracing, dewatering, testing, flushing and related items not specifically covered under other pay items as depicted on the construction plans. Pay shall be determined per each.

5) **FIRE HYDRANT with APPURTENANCES:** Payment for installation of fire hydrant with appurtenance shall include furnishing fire hydrant, gate valve, piping, trenching, excavating, compaction of backfill, blocking, disposal of excess excavated material, sheeting, shoring, bracing, dewatering, testing, flushing and related items not specifically covered under other pay items. Pay shall be determined per each to include fire hydrant, tees, gate valve, pipe and other miscellaneous items as required to provide an operational hydrant.

6) **CLEARING and GRUBBING:** Payment for clearing and grubbing shall include removing all debris from work site to include trees, shrubs, asphalt, concrete, etc. which interferes with construction and maintenance of the water main installation. Contractor shall dispose of materials at an off site located as furnished by the Contractor. The unit measurement shall be lump sum and based on the percentage of total contract complete.

7) **TEMPORARY EROSION CONTROL:** Payment for temporary erosion control shall include furnishing, installing and maintaining temporary erosion control as required by current Mississippi Department of Environmental Quality standards. Locations shall be determined by Engineer. Silt fence as part of temporary erosion control shall be installed and maintained to prevent erosion under or siltation above 50% of fence height within 24 hours of a rain event. The unit measurement shall be lump sum based on the percentage of work completed at the time of estimate.

8) **GRASSING:** Payment for grassing work shall include furnishing and installing seeding, fertilizer, lime and

other components required to establish permanent grassing. Grassing shall include final grading prior to installation of seeding materials. The unit measurement shall be lump sum and based on the percentage of area completed in full to date at time of estimate.

9) **MAINTENANCE OF TRAFFIC:** Payment for maintenance of traffic will be lump sum. Item shall include all materials, labor and equipment to maintain traffic based on the current MUTCD or as required by the engineer.

10) **MOBILIZATION:** Payment for mobilization shall enable contractor to assemble materials, equipment, etc. on site to prepare for construction. The unit measurement shall be lump sum. Mobilization shall be paid 50 percent at 5 percent of construction complete and 100 percent at 25 percent of construction complete.

WATER SYSTEMS

1) GENERAL

a) This item shall consist of furnishing all of the necessary materials, supervision, labor, tools, equipment and incidentals, and the installation of various types and sizes of water pipe and related items in accordance with the contract drawings and specifications, as stated in the Proposal.

2) APPLICABLE PUBLICATIONS

a) The following publications form a part of these specifications and where referred to by basic designation only, are applicable to the extent indicated. The latest editions of the publications referenced shall apply to the work.

i) AMERICAN SOCIETY FOR TESTING AND MATERIALS (ASTM)

A 139 Electric-Fusion (Arc) welded steel pipe (sizes 4 inch and over).

A 252 Welded and Seamless steel pipe piles.

C 31 Making and Curing Concrete Compressive and Flexural Strength Test Specimens in the Field.

C 33 Concrete Aggregates

C 39 Test for Compressive Strength of Cylindrical Concrete Specimens.

D 2922 Density of Soil Aggregate in place by the clear Method (shallow depths).

ii) AMERICAN NATIONAL STANDARDS INSTITUTE (ANSI)

21.10 Gray Iron and Ductile Iron Fittings, 3 inch through 48 inch for Water and other Liquids.

21.11 Rubber Gasket Joints for Cast Iron and Ductile Iron Pressure Pipe and Fittings.

21.50 Ductile Iron Pipe, Centrifugally Cast in Metal Mods or Sand-line Molds, for Water or other Liquids.

iii) AMERICAN WATER WORKS ASSOCIATION (AWWA)

C 104 Cement-Mortar Lining for Cast Iron Pipe and Fittings for Water and Other Liquids.

C 106 Cast Iron Pipe Centrifugally Cast in Metal Molds, for water and other Liquids.

C 110 Gray Iron and Ductile Iron Fittings, 3 inch through 48 inch, for Water and Other Liquids.

C 111 Rubber Gasket Joints for Cast Iron and Ductile Iron Pressure Pipe and Fittings.

C 150 Ductile Iron Pipe, Centrifugally Cast in Metal Molds or Sand-Lined Molds, for Water or other Liquids.

iv) AMERICAN ASSOCIATION OF STATE HIGHWAY & TRANSPORTATION OFFICIALS (AASHTO)

T-88 Particle Size Analysis of Soils.

T-89 Determining the Liquid Limit of Soils.

T-90 Determining the Plastic Limit and Plasticity Index of Soils.

T-99 Moisture Density Relations of Soils Using a 5.5 lb. Rammer and 12 inch Drop.

T-191 Density of Soil In-Place by the Sand-Cone Method.

v) MISSISSIPPI DEPARTMENT OF TRANSPORTATION

Standard Specifications for Road and Bridge Construction 1990 Edition.

3) **SUBMITTALS**

a) The following submittals shall be required for the respective materials used in the work. All submittals shall be submitted through the Contractor to the Engineer.

i) Ductile Iron Pipe: The following submittals shall be required for ductile iron pipe systems utilized on the project. The Contractor shall furnish manufacturer's certificates certifying that the pipe and fittings conform to the requirements as specified hereinafter under Article 4.0, Materials. In addition, the submittals shall include the following:

(1) Joints: The following shall be required for ductile iron joints.

(2) Drawings or Manufacturer's Catalogue data indicating dimensions and tolerance.

(3) Gaskets shall be tested in accordance with the respective standards as indicated in ANSI 21.11 and results shall be included in the submittals. Test shall be for similar materials on the gaskets and be not more than one year old.

(4) Mechanical Joints: Should the Contractor elect to use mechanical joints in lieu of push-on joints, manufacturer's data shall be submitted in accordance with the "Special Requirements for the Mechanical Joint" as stated in ANSI 21.11 (AWWA C 111).

ii) Ductile Iron Pipe Submittal Shall Include the Results of:

(1) Tension Test

(2) Impact Test

(3) Low Temperature Impact Test
Sampling procedure shall be as indicated in ANSI 21.51.

b) PVC Pipe: The Contractor shall furnish manufacturer's certificates certifying that the pipe and fittings conform to the requirements of these specifications and appropriate construction drawings.

4) MATERIALS - WATER SYSTEM

a) Ductile Iron Pipe:

i) Ductile iron pipe shall be designed in accordance with the latest revision of ANSI/AWWA C51/A21.51), rated working pressure of 350 psi plus a100 psi surge allowance; a 2 to 1 safety factor on the sum of working pressure plus surge pressure in Type 3 laying condition with a depth of cover as required per plans.

ii) Pipe shall have standard asphaltic coating on the exterior. Pipe also shall have a cement mortar lining on the interior in accordance with the latest revision of ANSI/AWWA C104/A21.4. If corrosion protection is required, polyethylene encasement shall be installed prior to the pipes installation in accordance with ANSI/AWWA C105/A21.5-88.

iii) All non-restrained pipe shall be furnished with push-on type joints such as "Fastite," or equal. Joints shall be in accordance with the latest revision of ANSI/AWWA C111/A21.11 and shall be furnished complete with all necessary accessories.

iv) Where restrained joint pipe is required, "Fast Grip", "Flex-Ring:, or "Field Flex-Ring" or approved equal shall be used. The length of restrained pipe shall be as tabulated or noted on the plans.

v) Ductile iron fittings shall conform to the latest revisions of either ANSI/AWWA C110/A21.10 or ANSI/AWWA C153/A21.53. Fittings, linings, and coatings shall be as specified for the pipe above.

vi) All pipe, fittings and accessories shall be installed and tested in accordance with the latest revision of AWWA C600. Newly installed ductile iron water mains shall be disinfected in accordance with the latest revision of AWWA C651 prior to placing in service.

b) PVC Pipe

i) PVC pipe for this project shall be PVC, C-900, Class 200. This standard covers the installation of Pressure Class 100, 150 and 200 PVC pipe complying with AWWA Standard C-900-89. PVC pipe shall bear the National Sanitation seal for potable water.

ii) The pipe shall be equipped with a push on joint in a single elastomeric gasketed joint. It is assembled by positioning the elastomeric gasket in the annular groove of the bell and inserting the spigot end of the pipe into the bell. The spigot end of the pipe compresses the gasket radially to form a positive seal. The gasket and annular groove are designed, sized and shaped so that the gasket will resist displacement. Care shall be taken so that only the correct elastomeric gasket, compatible with the annular groove of the bell, is used. Insertion of the elastomeric gasket in the annular groove of the bell must be in accordance with the manufacturer's recommendations.

c) Gate Valves:

i) Where indicated on the Plans or directed by the ENGINEER, the CONTRACTOR shall furnish and install gate valves as hereinafter specified.

ii) All gate valves shall be cast iron mechanical joint, Mueller A-2360, equivalent or better. All gate valves shall be furnished with O-ring packing and 2" square operating nut, AWWA 200lb., for cast iron water main.

iii) Valve boxes shall be cast iron top and bottom. Extension pieces shall be provide as required.

iv) Payment for furnishing and installing gate valves with box shall be made at the contract unit price per valve according to type and size as listed in the proposal.

v) All valves will be set at a perfect 90 degree angle from level pipe, (perpendicular) so as to be easily accessible through properly set valve box as per specifications above.

vi) The CONTRACTOR shall furnish and install either a two-piece or three-piece, slip type, cast iron valve box over each gate valve. Valve boxes will be set over valve operating nut, centered so as to be easily accessible with a valve operating wrench or key. They will be set to correspond with the finished grade of street, lot, or easement. No dirt will be left in box; box will not rest directly on valve body.

d) Fittings, Valves and Hydrants, etc.

i) All fittings, valves and valve boxes, hydrants, and other appurtenances are to be set at the points indicated on the plans, or as directed by the ENGINEER, and omission to do so shall be corrected by the CONTRACTOR without extra cost to the OWNER.

ii) All fittings shall either be Ductile Iron Compact (ANSI/AWWA C153/A21.53) or Cast Iron (ANSI/AWWA-C110/A21-10) and shall have mechanical joint ends and mechanical joint restraints (Series 1120) and shall be incorporated in the design of the follower gland and shall include a restraining mechanism which, when actuated, imparts multiple wedging action against the pipe, increasing its resistance as the pressure increases. Flexibility of the joint shall be maintained after burial. Glands shall be manufactured of ductile iron conforming to ASTM A 536-80. Restraining devices shall be of ductile iron heat treated to a minimum hardness of 370 BHN. Dimensions of the gland shall be such that it can be used with the standardized mechanical joint bell and tee-head bolts conforming to ANSI/AWWA A21.11 and ANSI/AWWA C153/A21.53 of latest revision. Twist-off nuts shall be used to insure proper actuating of the restraining devices.

iii) The mechanical joint restraint device shall have a working pressure of a least 250 psi with a minimum safety factor of 2:1 and shall be EBAA Iron., MEGALUG or equal.

iv) To improve the sealing capacity, the gaskets for all mechanical joints conforming to the requirements of ANSI/AWWA C110/A/21.10, C111/A21.11, or C153/A21.53 shall be of a design that causes the gasket to deflect approximately 30% during assembly of the mechanical joint. The gasket material shall conform to the requirements of ANSI/AWWA C111/A21.11, Section 1-6.4 of the latest revision. Mechanical joint gaskets shall be EBAA Iron's EBAA Seal- Improved Mechanical Joint Gasket or approved equal.

v) Fittings (bends, tees, plus, and caps) shall be securely braced by mechanical joint restraints, as indicated on the Plans, to prevent the possibility of blowing off under pressure. And a full length of pipe shall be installed on each end of the fitting. Then cut pieces can be installed beyond the full lengths of pipe.

vi) The prices bid furnishing and installing valves, fittings, etc., shall include compensation for furnishing mechanical joint restraints as required at beds, tees, plugs and caps. No separate or extra compensation will be allowed for any of the above specified incidental work or material.

e) Plugs and Caps

i) Where indicated on the Plans, or as directed by the ENGINEER, the CONTRACTOR shall install plugs for anticipated future extensions by placing a branch fitting (tee or cross) in the line and plugging the unused branch or branches. In general, such plugs will be located at street intersections where present plans provided lines running in only two or three directions from the intersections and where, in the opinion of the ENGINEER, a connection may be required for future extension. Where "deadend" lines are installed, the ends of such lines shall be plugged or capped as required.

ii) For the various hot taps required according to the plans, and up to 12 inches, the JCM 432, stainless Tapping Sleeve shall be required. The CONTRACTOR shall furnish all materials for these various taps and the OWNER will actually make the tap.

f) Casing Pipe: Steel pipe utilized as casing at locations shown on the Contract Drawings shall be new round piling pipe conforming to the requirements of ASTM A 252 or A 139. Casing diameter shall be adequate to allow pushing of the specified diameter of water pipe and make proper connections at the ends. Minimum Wall Thickness for steel casing is 0.375 inch.

g) Wash Gravel Bedding Material: Select Granular material for pipe bedding shall be coarse concrete aggregate. The coarse concrete aggregate shall conform to the gradation sizing Number 467 specified in Table 2 of ASTM Standard Specification C-33. (See Following Table.)

SIZE No. 467

Nominal Size (Sieves w/Square Openings)	Percent Passing by Weight
2"	100
1-1/2"	95—100
¾"	35—70
3/8"	10—30
No. 4	0—5

h) Stabilization Material: Stabilization Material shall be a pit run mixture of sand and gravel. The sand shall be hard, sharp and durable particles. All gravel shall pass a 1 - 1/2" sieve.

i) Concrete: Concrete shall be in accordance with the requirements of Technical Specifications – CONCRETE.

j) Select Backfill

i) General: The select material shall be composed of a natural or artificial mixture of sand, silt, clay or soil binder or other material of satisfactory cementing value. The sand shall be hard, sharp, and durable particles, preferably siliceous. The binder shall be a grade of clay or other material having satisfactory cementing qualities and shall be homogenous in character, free from vegetable matter, clay balls or other deleterious substances that cannot be classed as serviceable base material.

ii) Gradation : Any coarse aggregate contained in the material shall pass the one and one-half (1-1/2); sieve and not more than thirty-five percent (35%) shall be retained in the Number 10 sieve. The plasticity index (P.I.) shall not exceed 12, nor shall the liquid limit exceed 30.

iii) The composite selected sand-clay material passing the Number 10 sieve shall conform to the following minimum and maximum gradation limits:

Sieve	Percent Passing by Weight
Number 40	40—85
Number 60	30—70
Number 270	8—30
Silt (.05 to .005 mm)	03—15
Clay (Passing .005 mm)	3--15

iv) Backfill: All other backfill shall consist of excavated material removed from the trench.

5) CONSTRUCTION

a) Earthwork

i) Site Preparation:

(1) Topsoil shall be stripped and stockpiled in accordance with Technical Specifications - Restoration of Roads, Driveways, Fences, Lawns, and other Grassed Areas.

(2) All vegetation such as brush, heavy sod, heavy growth of grass, decayed vegetative matter, rubbish and any other unsuitable material within the area of trenching shall be stripped or otherwise removed before the trenching is started, and in no case shall such objectionable material be allowed in the trench.

(3) Stripping operation shall be to a depth of not less than 6 inches in all cases.

b) Asphalt or Concrete Removal: Before trenching operations begin, the existing asphalt or concrete pavement shall be scored or cut to a proper depth to give a straight vertical edge when removed. The asphalt or concrete shall be disposed of offsite by the Contractor. While removing the asphalt or concrete in the trench line, never shall the adjacent asphalt be raised or pulled from its base.

c) Trenching:

i) The Contractor shall determine all requirements for trench dimensions, alignment, and grades. The trench shall be excavated in conformance with all federal, state and local regulations for the protection of the workmen. Shoring, sheeting and/or a moveable form shall be used as required to provide earth stability during the laying operations.

ii) The final excavation of the trench for the pipe installation shall be as indicated on the Plans. Minor variations in horizontal (within the permanent easement) or vertical alignment during construction shall be made during construction (with the Engineer's approval) to facilitate ease of installation and operation (due to potential conflicts; i.e., utility conflict) at no additional cost to the Owner except for additional piping, if any. The trench from the top of the pipe down to the bottom of the bedding shall be of a consistent width as indicated on the plans. Should the excavated width of the trench be larger than the design width, the Engineer may direct that a higher type or class of bedding be used; or other adjustments be made to increase the load carrying capacity of the pipe.

iii) The Contractor shall not excavate more trench in advance of pipe laying than is necessary to perform the work efficiently. No more than 100 feet of open trench shall be allowed unless approved by the Engineer.

iv) Excavated material shall be place in a manner that will not obstruct sidewalks, driveways, or other structures. Excavated material shall not be placed so as to surcharge the walls and jeopardize trench stability.

d) Disposal:

i) The Contractor shall satisfactorily dispose of all excess earth from excavations either in approved (by the Engineer) areas within the construction limits or away from the project in disposal sites obtained by the Contractor.

ii) The Contractor will be permitted to mound excess earth over the trench to a maximum depth of 12 inches above the original ground surface or finished grade where the trench is located in unimproved

property. Wasting of excess excavated material will not be permitted within any road ROW. All material within the construction limits shall be placed so that natural drainage is maintained and the surface shall be graded to a smooth and uniform appearance. The disposal of waste and excess excavating materials, including hauling, handling, grading, and surfacing shall be subsidiary obligation of the contractor and no separate payment will be made. Therefore, the cost of such work shall be included in the Contract Unit Price for installation of water pipe.

e) Dewatering

i) The site shall be kept free of surface water at all times. The Contractor shall install drainage ditches and dikes and shall perform all pumping and other work necessary to divert or remove rainfall and other accumulations of surface water from the excavations. The diversion and removal of surface water performed in a manner that will prevent the accumulation of water behind temporary structures or at any other locations within the construction area where it may be detrimental. The Contractor shall provide, install, and operate sufficient trenches, sumps, pumps, hoses, piping, well points, deep wells, etc., necessary to depress and maintain the ground water level at least one foot below the base of the excavation during all stages of construction operations. The ground water table shall be lowered in advance of excavation and maintained a minimum of one foot below the lowest excavation subgrade made until the structure has sufficient has sufficient strength and weight to withstand horizontal and vertical soil and water pressures.

ii) Where groundwater is encountered, the Contractor shall make the effort necessary to secure a dry trench bottom before laying pipe. In sandy and in other suitable type soils, dewatering shall be done by well pointing. If, in the opinion of the Engineer, the Contractor has failed to obtain an absolutely dry trench bottom by insufficient use of all known methods of trench dewatering, the Engineer may order the Contractor to excavate below grade and place not less than 6 inches of graded crushed stone fill material over the trench bottom to form trench drains to suitably located sumps and to remove the water by bailing or pumping. The graded crushed stone fill material shall be placed at the Contractor's own expense and shall be of such depth that there shall be not water in bell holes at the time of coupling pipe. All costs of equipment, labor, and materials required for dewatering shall be included in the bid price.

f) Bedding

i) The Contractor shall satisfactorily shape the trench area (to specified line, grade and cross section) to receive bedding material. The bottom of the trench shall be undisturbed soil. Should the Contractor over excavate the trench without direction from the Engineer, the trench shall be brought up to grade with select backfill and compacted to at least 90% of maximum laboratory density as measured by AASHTO T 99. Such additional work and materials for over excavation without direction of the Engineer shall be at the expense of the Contractor.

ii) Holes for the bells shall be provided at each joint in the subgrade or in the granular fill bedding material as required. The holes shall be no larger than necessary for joint assembly and assurance that the pipe barrel will lie flat on the material. The Contractor shall install the proper bedding for the respective type of pipe and depth of installation as shown in the details and schedules on the plans. When depths vary in a particular manhole run, the Contractor shall change bedding systems in accordance with the depth installation requirements.

iii) Stabilization Materials: When the subgrade is found to be unstable or to include ashes, refuse, organic material, or other unsuitable material, the Engineer may direct that the subgrade be over excavated to remove such material. The depths of over excavation shall be as directed by the Engineer. Stabilization material shall be placed into the over excavated area of the trench and shall be paid for in accordance with these specifications. Stabilization shall be compacted to at least 90% of maximum laboratory density in six inch lifts.

iv) Bedding Materials

(1) As detailed in the plans, bedding material shall be placed to the specified depth below the pipe and tamped to a minimum of 90% of maximum laboratory density as determined in accordance with AASHTO T 99. Following placement of pipe, additional bedding material shall be placed and consolidated under the haunches of the pipe. Special tools shall be required to work the material into place and leave no voids beneath the pipe. The bedding material shall be tamped along the spring line (or along the top of the bedding material as indicated) of the pipe to sufficiently compact the material insofar as practical.

(2) The Engineer may direct additional moisture be added to the bedding material to aid in the compaction effort. Mechanical tampers may be employed to aid the process. depending on the particular bedding required, additional bedding shall be added and tamped to a minimum of 90% of maximum laboratory density, with AASHTO T-99.

v) Select Backfill: Select backfill shall be placed in 6 inch lifts and tamped to a minimum laboratory density with AASHTO T-99. Overall depth of the select backfill shall be as directed by the Engineer.

vi) Normal Condition Bedding: Under normal conditions the trench bottom shall be undisturbed earth shaped to the specified line, grad, and cross section with proper bell holes at each joint to insure that pipe barrel lies flat on trench bottom. The bedding material will be selected native materials excavated from the trench and placed in two lifts. The first lift being placed up to the spring line of the pipe and extending out to the trench walls and hand tamped to a minimum of 90% of maximum laboratory density. Special care shall be used in placing and tamping bedding to insure no voids under the haunches of the pipe. The second lift shall extend to approximately 6" above pipe (Material permitting) and hand tamped to 90% density.

g) Backfilling: Upon completion of placement of select material the excavated materials shall be immediately placed back into the trench. Specific requirements are:

i) Backfill requirements for road crossings, parking lots, driveways, and sidewalks shall be in accordance with Technical Specifications - RESTORATION of ROADS, DRIVEWAYS, FENCES, LAWNS and OTHER GRASSED AREAS.

ii) Backfill requirements for unimproved areas (pastures, wooded areas) shall consist of placement and shaping of the soil in such a manner as to allow maximum natural consolidation. No compaction of the general backfill in the unimproved areas will be required, except that caused by conventional shaping equipment.

iii) No debris shall be used as backfill which has a volume in excess of one-half of one cubic foot or weight excess of 75 pounds.

h) Sheeting Removal: Wooden sheeting or other thick sheeting or shoring members which have been driven or otherwise placed along the trench walls to an elevation below the spring line of the pipe shall be cut off at the spring line or higher and left in place.

i) Grading and Grassing: Final grading and grassing shall be in accordance with Technical Specifications, "RESTORATION of ROADS, DRIVEWAYS, FENCES, LAWNS, and OTHER GRASSED AREAS."

j) Pipe Handling and Storage: Pipe shall be handled, staked, and stored in accordance with manufacturer's printed literature. The Contractor shall provide security as required to prevent damage by vandals. PVC pipe shall be shaded from sunlight for extended lengths of time. Pipe damaged during storage and handling shall be rejected.

k) Pipe Laying

i) Each pipe shall be laid true to line and grade and in such manner as to form a close concentric joint with the adjoining pipe and to prevent sudden offsets of the flow line. As the work progresses, the interior of the water shall be cleared of all dirt and superfluous materials of every description. Where cleaning after laying is difficult because of small pipe size, a suitable swab or drag shall be kept in the pipe and pulled forward past each joint immediately after the jointing has been completed. Trenches shall be kept free of water and pipe shall not be laid when the condition of the trench or the weather is unsuitable for such work. At times when work is not in progress, open ends of pipe and fittings shall be securely and satisfactorily closed so that no trench water earth or other substance will enter the pipe or fittings.

ii) The water main shall maintain a minimum of 30 inches of cover at all times.

iii) Pipe laying shall be performed in such a manner that no foreign material enters the pipe. The Engineer may require that before lowering pipe, heavy canvas bags be placed over each end, and left in place until joints are ready to be made. If water is in the trench, the seals shall remain in place until the trench is pumped completely dry. If conditions are unsuitable, no pipe shall be laid until satisfactory laying conditions are obtained in accordance with the above specified requirements.

l) Pipe Jointing: Piping shall be jointed in accordance with the manufacturer's printed recommendations. Gaskets shall be firmly set within the bells and grooves as required. The manufacturer's recommended lubricant or an approved equal shall be applied for slip type joints.

i) Ductile Iron Pipe Joint Construction: The installation and jointing of ductile iron pipe shall generally conform to the applicable provisions of AWWA Standard Specifications C-600 for pipe laying.

ii) Where mechanical joint pipe is used, the surfaces which come in contact with the gasket shall be thoroughly brushed with a wire brush just prior to assembly. The gasket should be brushed with soapy water prior to installation to remove loose dirt and to lubricate gasket as it is forced into its retaining space.

iii) When tightening bolts, it is essential that the gland be brought up toward the pipe flange evenly. The bolts should be partially tightened; the bottom bolt first, then the top; next the bolts on either side; and last, the remaining bolts. Overstressing of bolts to compensate for poor installation will not be permitted. Bolt torque shall be in accordance with manufacturer's specifications.

iv) All joints of whatever type shall be completely water tight after being subjected to the required tests.

m) Borings: Borings shall be accomplished in accordance with Mississippi State Highway Department Standards. The contractor shall provide all necessary sheeting, bracing, cribbing, supports and appurtenances to insure the proper line and grade throughout the entire length of the crossing.

i) Casing Pipe: Casing Pipe shall be installed as indicated on the Contract Drawings. Joints shall be completely welded to provide structural integrity and shall be watertight.

ii) Carrier Pipe: Carrier pipe may be any of the allowed options of piping. However, the piping and joints shall be capable of withstanding the stress exerted by pushing the pipe within the casing.

iii) Carrier Pipe Supports: Supports for the carrier pipe shall be as recommended by the manufacturer for such installation. Supports shall be spaced to adequately support the piping under all conditions.

iv) Casing Seal: The annulus between the casing and carrier pipe shall be sealed at each end by installing WMSON Type U end seals, as manufactured by T.D. Williamson, Inc. Tulsa, Oklahoma, or equal, in accordance with the instructions of the manufacturer of the seals.

6) **SEPARATION of WATER and SEWER MAINS:** The water and sewer specifications should state that the water line be constructed no less than 10 feet horizontally and 18" vertically with water line over sewer line. If those conditions cannot be met then they will be decided on a case by case basis.

7) **TESTING**

a) Ductile Iron Pipe

i) Field Inspection: The Engineer shall perform visual inspection of the material prior to placement by the Contractor. The Engineer may make non-destructive tests to determine the soundness of the pipe. The Contractor shall assist the Engineer in handling and moving the pipe as required.

ii) Material Test: Material test shall be conducted during the manufacturing process and the results shall be included as part of the submittals. No other material test shall be required.

b) Steel Casing Pipe Material test shall be included as part of the submittal. No other material test shall be required.

c) Compaction Tests

i) Compaction tests shall be performed in accordance with AASHTO T 191 or ASTM D 2922. Maximum compaction shall be determined in accordance with AASHTO T 99.

ii) Compaction tests for water pipe related work shall not be less than as follows:

NUMBER of COMPACTION TESTS AASHTO T-99, AASHTO T-191, or ASTM D 2922		
Stabilization Material	1	One per 100 C.Y.
Bedding material	2	One per 600 L.F.
Tamped Backfill	2	One per 600 L.F.

d) Hydrostatic Testing

i) After the pipe has been laid, all newly laid pipe or any valved section thereof shall be subjected to a hydrostatic pressure of at least 1.5 times the working pressure at the point of testing and not less than 1.25 times the working pressure along the test section, for a minimum of 2 hours.

ii) And all tests shall be in accordance with AWWA Standard C600, Section 4.

iii) Allowable leakage shall be no more than that determined by the following formula:

$$L = \frac{SD\sqrt{P}}{133{,}200}$$

iv) In which L is the allowable leakage in gallons per hour; S is the length of pipe tested in feet; D is the nominal diameter of the pipe, in inches; and P is the average test pressure during the leakage test in pounds per square inch.

v) These tests are to be made a the Contractor's expense and he is to provide all necessary fittings, equipment, appliances and any other necessary items to conduct the tests in a manner satisfactory to the

ENGINEER. All costs incidental to conducting these tests are to be included in the prices bid for the various items of construction as no separate or extra compensation is to be allowed therefore. Record of testing is to be furnished to the OWNER.

8) CLEANING and STERILIZING

a) Before each section of work is placed in service, it shall be thoroughly flushed to remove any dirt or other foreign material from inside the lines; and the inside of the lines shall be sterilized by pumping into and though them as solution of chlorine of 50mg/l for 24 hours in such manner as to meet the requirements of the State Board of Health.

b) At least two (2) samples of chlorine free water, taken from each section shall be submitted to the State Board of Health for examination to determine if the system is free from organisms of the Coli-Aerogenes group. If such samples are not negative from organisms of the Coli-Aerogenes group, the system shall be disinfected and re-disinfected in a manner meeting the requirements of the State Board of Health, until the system is freed of contamination.

c) All water mains will be flushed, chlorinated and re-chlorinated until two (2) consecutive negative water samples are obtained by the Local Health Department. The samples shall be collected by the Certified Operator of the system or the Professional Engineer of the project.

d) The CONTRACTOR shall be responsible for the conduct of all of the above defined activities, and any and all costs incident thereto shall be included in the prices bid for the various items of construction as no separate or extra compensation is to be allowed therefore.

RESTORATION of ROADS, DRIVEWAYS, FENCES, LAWNS, and OTHER GRASSED AREAS

1) **GENERAL:** The work under this item of work shall consist of furnishing all necessary materials, labor, supervision, tools, equipment and incidentals for the restoration of roads, driveways, fences, lawns and other grassed areas so as to provide satisfactory repair to all damage caused by general construction work. It is the intent of these Specifications to restore all such features to the general conditions that existed prior to construction activity insofar as practical. It is not the intention of this Specification that trees, which must be cut and removed, be restored. The Contractor is expected to be familiar with the overall area and be satisfied as to the materials required and level of effort needed to accomplish such restoration in accordance with this Specification.

2) APPLICABLE PUBLICATIONS: The following publications form a part of this specification and where referred to by basic designation only, are applicable to the extent indicated. The latest editions of the publications referenced shall apply to the work:

a) AMERICAN ASSOCIATION of STATE HIGHWAY and TRANSPORTATION OFFICIALS (AASHTO):

i) T 99 The Moisture Density Relations of Soils Using a 5.5lg. (2.5 kg) Rammer and a 12-inch (305 mm) Drop

ii) T 167 Compressive Strength of Bituminous Mixture

iii) T 191 Density of Soil In-Place by the Sand-Cone Method

iv) T 230 Determining Degree of Pavement Compaction of Bituminous Aggregate Mixtures

b) AMERICAN SOCIETY for TESTING and MATERIALS (ASTM)

i) D 2922 Density of Soil and Soil Aggregate in Place by the Nuclear Method (shallow depths)

c) MISSISSIPPI DEPARTMENT of TRANSPORTATION (MDOT)

i) Standard Specifications for Road and Bridge Construction, 2004 Edition
ii) Manual on Uniform Traffic Control Devices for Streets and Highways (MUTCD)

3) **SUBMITTALS:** Mix Designs: Design mix will be provided by Contractor and approved by Engineer prior to production of asphalt.

4) **MATERIALS**

a) 4.1 Subbase and Base Courses: Subbase and base courses under paved areas shall be as specified in MSHD Specification, Section 300.

b) 4.2 Prime Coat: Prime coat shall consist of Grade MC-30 or Grade MS-70 in accordance with the applicable requirements of MDOT Specification Section 408.

c) Bituminous Pavement: Bituminous Pavement for roadway and parking areas, wearing and binder courses shall consist of a mix in accordance with MDOT Specifications Section 403.

d) Materials shall conform to the following subsection of MDOT, Specifications Sections 702 and 703.

i) Bituminous Materials (AC-20) 702.01

ii) Aggregate

iii) BC-1 Binder Course

iv) SC-1 for Surface Course

v) Filler 703.14

vi) Topsoil: Topsoil shall be in accordance with Technical Specifications - SEEDING and SODDING.

vii) Seeding and Sodding: Seeding and sodding operations shall be in accordance with Technical Specifications -"SEEDING and SODDING."

5) CONSTRUCTION

a) Maintenance of Traffic

i) Prior to limiting or restricting traffic on any street or road, the Contractor shall obtain permission from the City of Hattiesburg. Through or local traffic shall at all times be accommodated by the use of temporary approaches, crossings or detours (if allowed by the City of Hattiesburg). Satisfactory (to the Property Owner) ingress and egress to any public or private property shall be properly maintained. Proper barricades, signs and detour signs shall be provided by the Contractor to adequately warn motorists of obstructions ahead. Lighted (flashing) barricades shall be used at night.

ii) Flagmen shall be provided to direct traffic around equipment and for one way movement of traffic around equipment and for one way movement of vehicles. The Contractor may have to stop construction and restore full traffic during certain rush hours.

iii) The Contractor shall at all times (unless otherwise permitted in writing by the City of Hattiesburg) maintain open one lane to traffic during construction operations and restore roadways to two-way traffic during non-construction hours.

b) Repair of Asphalt; Concrete Streets; Driveways; Parking Lots

i) Removal and Earthwork:

(1) The existing asphalt pavement shall be uniformly saw cut on straight lines and the material shall be removed. Other methods of cutting the existing asphalt surface which will result in a uniform straightedge similar to a sawed cut may be acceptable. Upon completion of the pipe laying, select backfill shall be placed in the excavation in maximum 8-inch lifts and compacted to at least 90% of maximum laboratory density to within one foot of the top subgrade and to 95% of maximum laboratory density in the upper one foot of the subgrade.

(2) Maximum density of typical select backfill material shall be determined in accordance with AASHTO T 191 or ASTM D 2922. Portable mechanical tampers or vibratory compactors shall be used in the trenches. Rollers may be used at street level. Existing base and asphalt surfaces which become undermined during construction shall be removed until firm undisturbed subgrade is reached.

c) Asphaltic Base: Asphaltic base shall be constructed in accordance with MSHD Specification, Section 300.

i) Prime Coat: Prime coat shall be applied to exposed existing base material prior to

overlay with asphaltic base course in accordance with MSHD Specification, Section 408.

ii) Tack Coat: Tack coat shall be applied to existing or new asphaltic wearing course and asphaltic base, or concrete which is to require asphalt wearing course.

iii) Asphalt Wearing Course: Placement and compaction of the bituminous pavement shall be in accordance with MSHD Specification Section 403.03.

iv) Utilities: All utility covers excavated during removal of streets, driveways, parking lots shall be restored to finished grade.

d) Driveways and Sidewalks:

i) Driveways and sidewalks shall be repaired in similar manner to the original construction. Asphalt drives shall be saw cut where required and repaired in accordance with Paragraph 6(b) of this Specification. Concrete drives shall be saw cut or removed to the next joint. The minimum thickness for concrete driveway repair is 6 inches and for sidewalks is four (4) inches.

ii) Concrete surfaces shall be properly tooled and receive a broom finish. Installation (if required) of new driveway drainage culvert shall be made only at the direction of the Engineer. The Contractor shall take all reasonable precautions to allow for reuse of existing drainage culverts.

e) Repair to Gravel Roads: Gravel roads shall be backfilled and compacted in accordance with Paragraph 6(b) of this Specification. The final surface shall consist of 12-inch in-place compacted clay gravel. Compaction shall be to 100% of maximum laboratory density in accordance with AASHTOT 99.

f) Repair to Lawns:

i) General: The Contractor shall exercise extreme care to minimize damage to improved lawns. Trees and shrubs within the limits of work shall be removed only for essential construction requirements. Any shrubs, which are removed or damaged, shall be replaced by satisfactory (to the Property Owner) planting by the contractor. Any grass seed areas, roads, streets, driveways, culverts, fences, water lines, metal boxes or other items (excluding trees unavoidably cut) which are damaged by the Contractor, shall be satisfactorily restored by Contractor. Acceptance of improved lawn repairs shall be based on the firm establishment of live stand of grasses and live growth of any replanted and acceptable shrubs. The Contractor shall water and fertilize such areas until healthy growth of grass (and shrubs, if applicable) are attained

ii) Grading: The surface areas shall receive finish grading so the finish topsoil surface (after settlement) will meet the existing contour grade of the area prior to construction. The natural drainage during and after construction shall not be altered so as to cause adverse effects to adjoining properties.

iii) Topsoil: The Contractor shall strip topsoil and sod and stockpile for later use. Upon completion of trenching over the area. Additional topsoil shall be furnished if required (at no additional cost) to provide a uniform thickness of 3 inches. Lime at a rate of 1 - 1/2 tons per acre and fertilizer (13-13-13) at a rate of 800 pounds per acre shall be applied as needed to further establish grass growth.

iv) Grassing: Grass seed, sprigs, or sod similar to the existing lawn grasses shall be planted in accordance with the supplier's recommendations. Winter cover grasses such as rye grass shall be applied (in addition to planting the permanent grasses) if seeding, sprigging, or sodding is done at a time of year when the permanent grasses will not actively grow. The type(s) of permanent grasses shall be the same as the grass(es) in the damaged lawns. If the lawn repairs are accomplished between September 1 and March 1, the Contractor shall continue the restoration work during the next period of March 15 and April 5 and mow the grass and continue the restoration until satisfactory growth of the permanent

grass (es) is obtained. Such additional restoration work shall include the 1 - 1/2 tons of lime per acre, application of 13-13-13 fertilizer at a rate of 800 pounds per acre and replanting and watering permanent grass as necessary to obtain satisfactory (to Engineer) growth. No time will be charged against the Contract Time for any such additional restoration work.

v) Sodding: Sodding shall be in accordance with Technical Specifications - SEEDING and SODDING.

g) Erosion Control:

i) During all phases of construction, the Contractor shall adequately protect all work from adverse erosion. Soil shall not be allowed to flow off the limits of work area. The Contractor shall employ the use of ditch checks, matting, temporary grass cover, blankets, or other measures to control erosion. The Contractor shall be responsible to correct damage caused by erosion.

ii) During the construction of this project, all work areas will be strictly monitored. All trench lines will be kept in excellent condition, all streets and drives will receive careful maintenance, keeping potholes and settled areas filled in. Dust control is essential and will also be strictly monitored.

h) General Grassing of Unimproved Areas

i) General: The Contractor shall seed and establish grass growth in all disturbed areas in unimproved areas (to include pastures and roadsides). Acceptance of the grass cover shall be based upon the firm establishment of a live stand of grass. The contractor shall water such grass if natural rainfall rails to adequately provide moisture. On slope and other areas subject to erosion, grassing shall be accomplished as soon as practical (within 48 hours unless weather is prohibiting) after finish grading operations.

ii) Grading: The surface area shall receive finish grading so the finish topsoil surface (after settlement) will meet the existing contour grade of the area prior to construction. The natural drainage during and after construction shall not be altered so as to cause adverse effects to adjoining properties.

iii) Topsoil: The Contractor shall remove existing topsoil and stockpile for later use. Upon completion of backfilling (to establish contours as before construction), the topsoil shall be uniformly spread back over the area. The Engineer may require additional topsoil be furnished by the Contractor, if in the opinion of the Engineer, adequate provisions and efforts were not made by the Contractor to stockpile and re-use existing topsoil material.

iv) Fertilizer and Agricultural Limestone: The Contractor shall uniformly apply 800 lbs. per acre of 13-13-13 fertilizer and also apply two (2) tons per acre of agricultural limestone to the area to be seeded. The fertilizer and limestone shall be tilled into the soil to a depth of four (4) inches.

v) Seeding: Seed shall be uniformly sown in accordance with Technical Specification - SEEDING and SODDING.

vi) Sodding: Sod shall be place in accordance with Technical Specification – SEEDING and SODDING.

i) Mulch Cover: Erosion prone areas such as steep slopes and highway shoulders shall receive a layer of loose straw mulch or equivalent at the rate of one and one-half (1-1/2) tons per acre. The mulch cover shall be established by the application of emulsified asphalt or by "crimping" parts of the material into the soil.

j) Miscellaneous Items: Items such as fences, gates, headwalls, paved ditches, and other items shall be replaced or repaired as required for restoration. Should additional fencing material be required, new post and new wire of similar size, type and gauge shall be provided and installed.

k) General Care: Reasonable care shall be taken during construction to avoid damage to vegetation. Ornamental shrubbery and tree branches shall be temporarily tied back, where appropriate, to minimize damage. Trees, which do not have to be removed in the opinion of the Engineer, and which receive damage to branches shall be trimmed of those branches to improve the appearance of the tree. Tree trunks receiving damage from equipment shall be treated with a tree dressing.

6) TESTING

a) General: All sampling and testing shall be accomplished by the testing laboratory approved by the Owner and employed by the Contractor to perform such services. Results shall be immediately forwarded to the Engineer by the Contractor.

b) Earthwork: Earthwork directly involved with road and street repair shall be tested as follows:

i) Moisture Density Relationship (Standard Proctors): Two tests of sampled native material shall be required.

ii) Tests shall be in accordance with AASHTO T 99.

iii) Field Density: A minimum of two and a maximum of four field density tests shall be required. Density tests shall be in accordance with AASHTO T 191 or ASTM D 2922

iv) Topsoil: Two pH tests and two organic content tests (wet combustion method) will be required.

SEEDING and SODDING

1) **DESCRIPTION:** This item consists of furnishing all labor, supervision, materials, tools, incidentals and equipment and performing all work for topsoiling, tilling, fertilizing, seeding, watering, and otherwise establishing, protecting and maintaining seeded and sodded areas as required by the Contract Drawings and these specifications, and including repair, refertilizing and reseeding as required until final inspection and acceptance of the project.

2) **SUBMITTALS**: Certificates for fertilizer, limestone, seed.

3) **MATERIALS**

a) Topsoil: Topsoil shall be the surface layer of soil that is stockpiled by the Contractor during stripping and/or excavation on the site. The topsoil shall be free of subsoil, clay, lumps, stones, brush or seed. Topsoil shall have a pH value of not less than 4.5 or more than 8.0.

b) Lime: Lime shall be ground limestone containing not less than 80% of total carbonates and shall be ground to such fineness that 80% will pass through a No. 10 mesh sieve and 40% will pass through a No. 40 mesh sieve.

c) Fertilizer: Fertilizer shall be water soluble commercial carriers of available plant food elements or combinations thereof, as stated herein and shall conform to the applicable state fertilizer laws. They shall be uniform in composition, dry, and free flowing materials in condition for application by suitable equipment. The fertilizer shall be delivered in standard bags or other convenient standard containers, each fully labeled with manufacturer's guaranteed analysis. Any fertilizer shall contain not less that the percentages by weight of the ingredients set out as follows: (1) Nitrogen, 13% (2) Phosphorous P O, 13%, (3) Potash K C, 13%. Invoices for fertilizer will show the kind and have analysis furnished.

d) Seed: Seeds with a minimum pure live seed content of 90% shall be used. They shall be of the best grade and of known vitality, purity, and germination and shall be delivered in containers bearing seed tags as required by law showing percentages of germination content and purity of seed as well as percentages of weed seed content.

i) All seeds shall be free of wild onion, Canadian thistle, Johnson grass, crab grass or other seeds of noxious weeds. All seeds shall be furnished in standard containers, or as acceptable to the Engineer. Seed which has become wet, moldy or otherwise damaged in transit or storage will not be acceptable.

Purity, Germination, and Planting Schedule

Spring and Summer Seeding
(March 1 to September 1)

Name	Percent Purity	Percent Germination	Mix (dry wt. lbs.) per Acre
Hulled Bermuda	95	90	20
Pensacola Bahia	95	90	30
		TOTAL	50

Fall and Winter Seeding
(September 1 to March 1)

Name	Percent Purity	Percent Germination	Mix (dry wt. lbs.) per Acre
Unhulled Bermuda	95	90	20
Pensacola Bahia	95	90	30
Rye	95	85	15
Crimson Clover	95	85	8
		TOTAL	73

ii) Seeding in Existing Lawns: Grass seeds for existing lawns shall be the same as the existing grass.

e) Leguminous Inoculants: Inoculation media containing live nitrogen-fixing bacteria shall be supplied with all legume seed. The inoculants shall be standard, pure culture of nitrogen-fixing bacteria. Each kind of legume will require cultural bacteria that are adapted to that particular kind of seed. The bacteria shall be supplied in convenient containers seed. The bacteria shall be supplied inconvenient containers of a proper size to treat the amount of seed to be planted. The legume seeds shall be treated according to the directions, and before the expiration date for use of the media shown on the container.

i) Soil for Repairs: for fills or areas to be repaired, soil shall be topsoil of a least equal quality to that which exists in areas adjacent to the area to be repaired.

f) Water: Water shall be free from oil, acid, alkali, salt, and other substances harmful to growth of grass, and shall be from a source accepted prior to use.

g) Solid Sod: Bermuda or Carpet Grass and shall be native to the locality of the work and shall, when placed be live, fresh, growing grass with at least two and one-half (2-1/2) inches of soil adhering firmly to the roots. The sod shall be reasonably free from obnoxious weeds or other grasses, and shall not contain any matter deleterious to its growth; or which might affect its subsistence or hardiness when transplanted. The sod shall be in blocks at least 3"x 8", and free from ragged edges.

4) INSPECTION AND TESTS

a) Fertilizer and Limestones: Duplicate copies of material invoices shall be furnished to the Engineer. Invoices shall show quantities and grade of fertilizer, quantity of limestone, percentages of calcium carbonate and magnesium carbonate, as applicable, and the percentages of limestone that pas the No. 40 and the No. 10 mesh sieves. Samples of each lot of fertilizer and limestone shall be furnished for testing. upon completion of project a final check of total quantities of fertilizer and limestone used will be made against total area treated, and if minimum rates of application have not been met, additional quantities of these materials to make up minimum application specified shall be distributed.

b) Seed: Contractor shall furnish to the Engineer duplicate signed copies of statement(s) from vendor(s), certifying that each container of seed delivered is labeled in accordance with Federal Seed Act and is at least equal to requirements specified therein. This certification shall be obtained from vendor and shall be furnished before application.

5) PREPARATION of GROUND SURFACE

a) General: Equipment, in good operating condition, shall be used for the proper preparation of the ground and for handling and placing all materials. Equipment shall be acceptable before work is started.

b) Topsoiling: Topsoil shall be obtained from job site stockpiles formed during stripping and/or excavation operations and shall be free from subsoil, clay lumps, stones, brush, grasses or weeds, excess acids or alkali, or any other material to subsequent, smooth, grading, planting, and maintenance operations.

c) Grading: Previously established grades shall be maintained on the areas to be treated in a true and even condition; necessary repairs shall be made to previously graded areas by means of graders or other approved equipment.

d) Tillage: After the areas required to be treated have been brought to the grades shown, the soil shall be tilled to a depth of at least 4 inches by plowing, disking, harrowing, or other acceptable operations until the condition of the soil is acceptable. The work shall be performed only during period when beneficial results are likely to be obtained. When drought, excessive moisture, or other unsatisfactory conditions prevail, the work shall be stopped when directed. Undulations or irregularities in the surface shall be leveled before the

next specified operation.

6) **APPLICATION of FERTILIZER and LIMESTONE**

a) Preplanting fertilization of areas to be seeded: Fertilizer shall be distributed uniformly at a rate of 800 pounds per acre over areas to be seeded and shall be mixed into the soil to a depth of at least 4 inches by disking, harrowing, or other acceptable methods. Application of fertilizer may be part of the operation specified in Section 5.4: TILLAGE of these specifications.

b) Liming: Immediately following or simultaneously with incorporation of fertilizer, limestone shall be distributed uniformly at a rate of 4000 pounds per acre, and shall be mixed into the soil to a depth of at least 4 inches by disking , harrowing, or other acceptable methods. Application of limestone along with fertilizer may be part of the operation specified in Section 5.4: TILLAGE of these specifications.

c) Leveling: Surface irregularities resulting from tillage, fertilizing, liming, or other operations shall be leveled before seeding.

d) Postplanting fertilization: From 40 to 60 days after seeding, ammonium nitrate or its nitrogen equivalent shall be applied uniformly at a rate of 225 pounds per acre over areas seeded. Fertilizer shall be applied when grass blades are dry to minimize burning. The planted area shall be watered to thoroughly moisten the upper 6 inches of the soil surface after the fertilizer is applied.

7) **PLANTING SEED**

a) General: A satisfactory method of sowing shall be employed; using approved mechanical power-drawn drills or seeders, or other approved methods. When drills are used, markers or other means shall be provided to insure that the successive seeded strips will overlap or be separated by a space no greater than 6 inches. When delays in operations extend the work beyond the most favorable planting season for species designated or when conditions are such by reason of drought, high winds, excessive moisture, or other factors that satisfactory results are not likely to be obtained, work shall be halted as directed and resumed only when conditions are favorable or when approved alternate or corrective measure and procedures have been effected. If inspection during or after seeding operations indicates that strips wider than 6 inches have been left unplanted or other areas skipped, additional seed shall be sown.

b) Broadcast Seeding: Seeding shall be broadcast either by hand or with acceptable seeding equipment, in combination with fertilizer, or with other acceptable sowing equipment. Seed shall be distributed uniformly over designated areas. Half of the seed shall be sown with sower moving at right angles to first sowing. Seed shall be covered to an average depth of 1/4 inches by brush harrow, spiketooth harrow, chain harrow, cultipacker, hand rake with wood tines, or other approved device. Seed shall not be broadcast during windy weather.

c) Drill Seeding: Drill seeding shall be accomplished with approved equipment with drills set not more than 6 inches apart. Seed shall be sown uniformly over designated areas to average depth of 1/4 inch.

d) Sodding: All solid sod shall be procured areas where the soil is fertile and contains a high percentage of loamy topsoil, and from areas that have been grazed or mowed sufficiently to form a dense turf.

e) Mechanical devices, such as sod cutter, may be used for cutting the sod into strips or blocks. Care shall be exercised at all times to retain the native soil on the roots of the sod during the process of excavating, hauling and planting.

f) The solid sod blocks shall be transplanted within 24 hours from the time of cutting, unless they are stacked at their destination in a manner satisfactory to the Engineer. All solid sod in stacks shall be kept moist and protected from exposure tot he air and sun, and from freezing. In no event shall more than two (2) days elapse between the cutting and planting of the solid sod.

g) Solid sod shall be planted during the period between March 1st and December 15th, unless written permission is given by the Engineer to extend the planting season. The solid sod shall be placed on the prepared surface with the edges in close contact. All cracks between blocks of solid sod shall be closed with small pieces of fresh sod and all cracks too small for sod shall be filled by a light dressing of topsoil. The entire sodded area shall then be compacted and watered to the satisfaction of the Engineer. Rollers, hand tamps or other approved equipment may be used for compacting.

h) Surfaces of solid sodding which, in the opinion of the Engineer, may slide due to the height and slope of the surface or nature of the soil, shall, upon direction of the Engineer, be "pegged" with wooden pegs driven through the sod blocks into firm earth, sufficiently close to hold the sod in place.

8) **MAINTENANCE:** Seeded areas shall be maintained until all work or designated portions thereof have been completed and accepted. Tall grass and weeds that tend to impede the desired grass species shall be mowed, and any damage resulting from these operations shall be repaired at the Contractor's expense.

9) **ESTABLISHMENT of GROWTH**

a) General: The Contractor shall be responsible for proper care of seeded areas while grass is becoming established for three (3) months after completion of treatment on the entire project, unless desired cover is established in a shorter period of time and the Owner shortens responsibility period. The Contractor shall be responsible for providing a satisfactory stand of grass. A satisfactory stand of grass is determined as a cover of living grass in which gaps larger than 12 inches square do not occur as determined by an acceptance inspection made at the end of the maintenance period. Maintenance work shall be performed at the Contractor's expense.

b) Mowing: Seeded and sodded areas shall be mowed with acceptable mowing equipment to a height of about 4 inches when average height of grass becomes about 8 inches. When amount of cut grass is heavy, grass shall be removed to prevent destruction of underlying turf. If weeds or other undesirable vegetation threatens to impede the growth of planted species, such vegetation shall be mowed, or in case of excessive growth, shall be uprooted, raked and removed from area.

c) Refertilizing: The Contractor will determine areas needing refertilization at least 15 days before application is required. Fertilization shall be distributed on designated area during periods when grass is dry. 13-13-13 grade fertilizer shall be applied uniformly at a rate of 800 pounds per acre. Fertilizer conforming to physical condition, packaging and marking as specified hereinbefore shall be provided.

d) Reseeding: The Contractor will determine areas requiring reseeding at least 15 days before period specified for reseeding. Seed specified hereinbefore shall be drilled at rates hereinbefore specified, in a manner that will cause minimum disturbance to existing stand of grass, and at an angle of not less than 15 degrees from direction of previously seeded rows.

FIRE HYDRANT

1) **GENERAL:** Fire hydrants shall comply in all respects with AWWA Standard C-502, latest revision. Fire hydrants shall be of the compression type, with the main valve opening against the pressure and closing with the pressure. The main valve opening shall be 5 ¼" in diameter. Fire Hydrant shall be of a dry barrel, dry top design. The nozzle section shall consist of two (2) hose nozzles and one (1) pumper nozzle or other as specified.

2) **RATING**: Fire hydrants shall be rated at 250 psi water working pressure, tested at 500 pounds hydrostatic for structural soundness in the following manner: 500 pound hydrostatic test supplied from the inlet side, first with the main valve closed for the testing of the valve seat: second, with the main valve open for testing of the drain valves and the hydrant barrel. Testing to be complete in accordance with AWWA C-502 and ULFM requirements.

3) **END CONFIGURATION**: Hydrants shall be connected to the main by a 6" fusion bonded, epoxy coated mechanical joint shoe. Mechanical joint shoes shall be fitted with strapping lugs.

4) **DESIGN**

a) The main valve seat of the hydrant shall be made of rubber and be supported by a one-piece bronze top plate / drain valve mechanism. Drain valves shall be faced with rubber. The bottom stem threads of the main valve rod shall be fitted with an epoxy coated, cast iron bottom plate, sealing lower rod threads from the water.

b) Changes in size or shape of the waterway (hydrant nozzles) shall be accomplished by means of easy curves. Exclusive of the main valve opening, the net area of the waterway of the barrel and the foot piece at the smallest part shall not be less than 120% of that of the net opening of the main valve.

c) Hose and pumper nozzles shall be threaded and screwed into the nozzle section and then mechanically locked to prevent turning.

d) Hose and pumper caps shall be chained to the hydrant

e) The hydrant shall be so designed that when it is in place, no excavation will be required to remove the main valve and movable parts of the drain valve. Further, the hydrant shall be of the type that can be extended without excavating.

f) Hydrants shall be so designed that, in the event of accident, or breaking of the hydrant above or near grade level; the main valve will remain closed.

g) The main valve rod shall be made in two parts and fitted with breakable coupling at the ground line flange.

h) The ground line connection between nozzle section and the barrel shall incorporate the use of a traffic flange. This connection shall be so designed that the nozzle section can be rotated in any increment of 360°. The ground line connection between the barrel and nozzle sections shall have a rubber o-ring gasket to provide a seal.

i) The operating threads of the hydrant shall be so designed as to avoid the working of any iron or steel parts against either iron or steel. The operating stem and operating nut threads shall be square or acme type.

j) The operating thread shall be lubricated at factory with food grade grease. Access shall be provided to field lubricate the operating mechanism.

k) The operating thread shall be sealed from water at all times when the valve is either in the opened or closed position. The operating rod shall be bronze sheathed where it passes through the double "O" ring seal in the

bonnet.

l) The bonnet shall be weather proof and utilize a weather shield integral with the external wrench operating nut.

m) The operating nut shall be made of bronze with a self-lubricating design.

n) Hydrants shall be of the dry barrel type and the hydrant shoe shall have two positive acting non-corrosive drain valves that shall drain the hydrant completely by opening when the main valve is closed, and close tightly in accordance with AWWA C-502 requirements when main valve is open.

o) The main valve assembly shall be seated in the hydrant with a bronze-to-bronze interface to facilitate removal of the main valve, should maintenance be required. The nozzle section shall consist of two-2 1/2" hose nozzles to the specified thread designation (NST) and one pumper nozzle 4 ½" in diameter to the specified thread designation (NST), or other combination of nozzle outlets, including independent hose gate valves, as shown on the plans.

p) Two O-ring seals shall be utilized where the main hydrant rod passes through the 1 piece bonnet.

q) Hydrant standpipe shall be ductile iron and single piece for all bury depths.

r) All like parts of hydrants of the same size and model produced by the same manufacturer shall be interchangeable.

s) Hydrant shall open by turning to the left. The direction of opening is to be permanently marked on the hydrant bonnet.

t) Threads on hose and steamer nozzles shall be National Standard unless otherwise specified.

u) Size and shape of operating nuts cap nuts shall conform to National Standard unless otherwise specified.

v) Bury shall be a minimum of three (3) feet measuring depth from grade line to bottom of trench or connecting pipe.

w) Auxiliary shut-off (isolation) gate valves, when required, shall be of the same manufacture as the hydrant.

5) **COATING**

a) The inside of all hydrants shall be coated in accordance with AWWA standards except for bronze and threaded machined surfaces. Exterior on hydrant nozzle section shall be painted Fire Hydrant Red (or other as shown on the plans).

b) Hydrant shoes shall have an interior and exterior thermosetting epoxy coating of 5 to 6 mils meeting AWWA C550.

6) **MARKINGS:** Hydrant shall be marked with the name of the manufacturer, size of valve opening, direction of opening and the year of manufacture all in accordance with the AWWA C-502.

7) **SOURCE:** Hydrants shall be M&H Model 129, Mueller Super Centurion 250, or the American Flow Control B-84-B-5

CONSTRUCTION PLANS

FOR

VETERANS BOULEVARD WATER CONNECTION

FOR THE

CITY OF HATTIESBURG

FORREST & LAMAR COUNTIES MISSISSIPPI

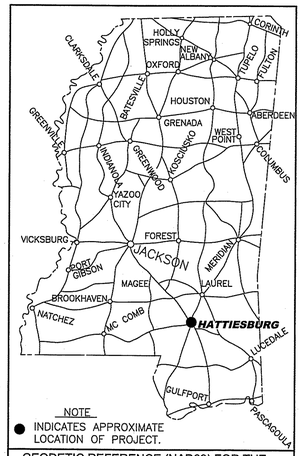

NOTE
● INDICATES APPROXIMATE LOCATION OF PROJECT.

GEODETIC REFERENCE (NAD83) FOR THE APPROXIMATE MIDDLE OF THE PROJECT:
LATITUDE: N 31°15'44.20"
LONGITUDE: W 89°20'15.46"

SEE SHEET No. 2 FOR DETAIL SHEET INDEX

OCTOBER 2012

MAYOR

Johnny DuPree, Ph. D.

COUNCIL PERSONS

Kim Bradley, President
Carter Carroll
Deborah Denard Delgado
Dave Ware
Henry E. Naylor

DIRECTOR OF ENGINEERING

Bert Kuyrkendall, P.E.

PREPARED BY:

SHOWS, DEARMAN & WAITS, INC.
CONSULTING ENGINEERS
P.O. BOX 1711
301 SECOND AVENUE
HATTIESBURG, MISSISSIPPI, 39403-1711
HTTP://WWW.SD-W.COM
P: (601) 544 - 1821
F: (601) 544 - 0501

KYLE D. WAITS
REGISTERED PROFESSIONAL ENGINEER
12693
STATE OF MISSISSIPPI

Sheet No. 1
Drawing No.: 1270

G:\PROJECTS\Hattiesburg_City of\1270 - Veterans Blvd Water Connector\1270cdwg\1270_cvrmapnotes.dwg, 1, 10/23/2012 4:00:55 PM

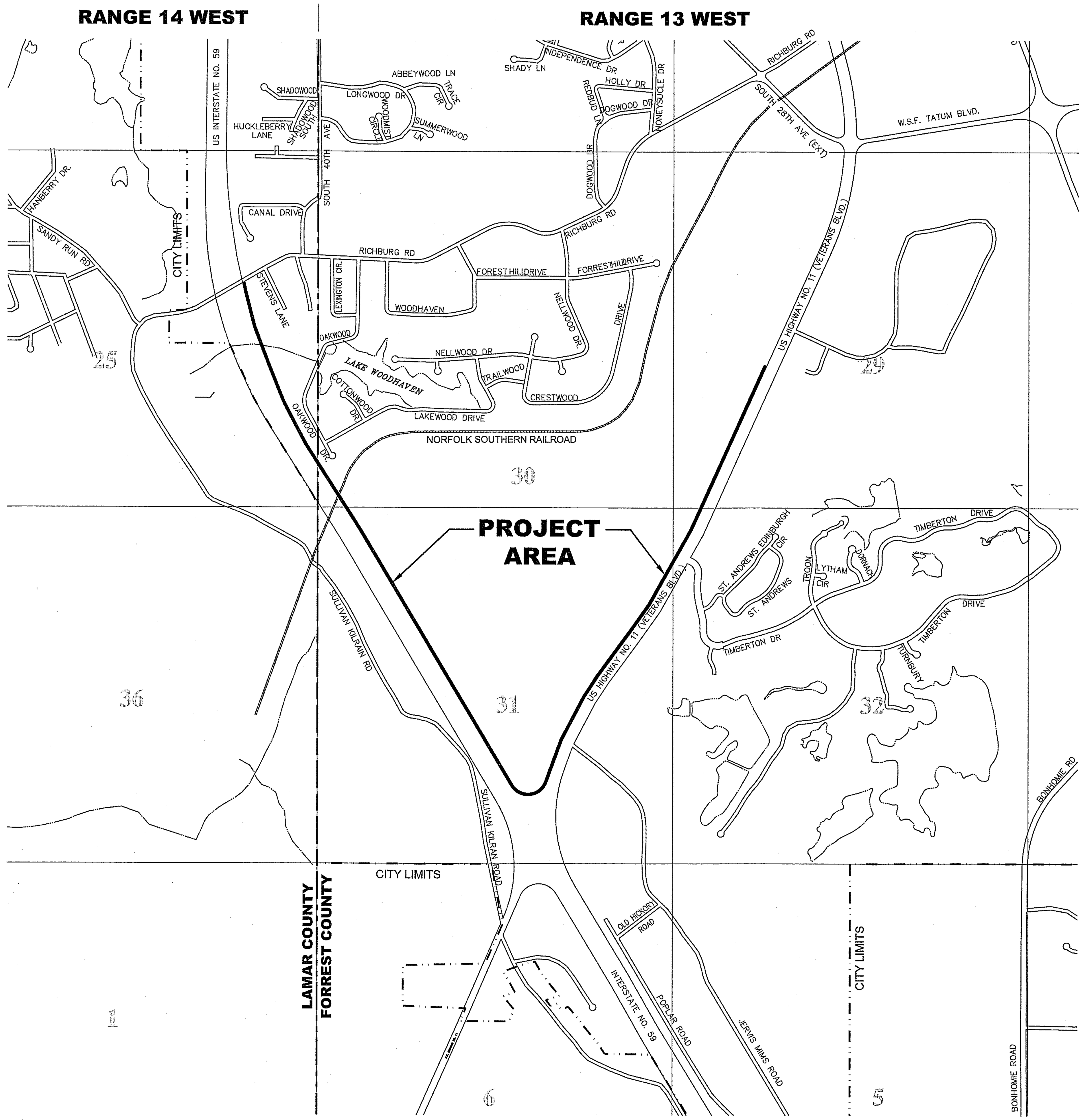

VICINITY MAP

GENERAL NOTES

1. ALL WORK SHALL BE PERFORMED IN ACCORDANCE WITH ALL LOCAL, STATE AND FEDERAL CODES.
2. THE CONTRACTOR SHALL KEEP A SET OF BLUE LINE PRINTS OF THE PROJECT ON THE JOB SITE SHOWING THE ACCURATE MEASUREMENTS AND ELEVATIONS OF THE "AS-BUILT" SYSTEM. THIS DATA WILL BE COLLECTED AND PUT ON THE DRAWINGS DAILY.
3. THE APPROVED MDOT PERMIT SHALL BE CONSIDERED A PART OF THESE PLANS AND SPECIFICATIONS.
4. THE CONTRACTOR SHALL BE RESPONSIBLE FOR COMPLETING THE ENTIRE PROJECT.
5. CONTRACTOR SHALL BE RESPONSIBLE FOR ALL CITY OF HATTIESBURG AND/OR LAMAR COUNTY FEES AND PERMITS ASSOCIATED WITH CONSTRUCTION.
6. THE CONTRACTOR SHALL BE RESPONSIBLE FOR HIS OWN SUB-SURFACE SOIL INVESTIGATIONS.
7. THE CONTRACTOR IS RESPONSIBLE FOR THE LOCATION AND PROTECTION OF ALL UTILITIES WITHIN THE WORK AREA.
8. ALL UNDERGROUND UTILITIES, FOR THE ENTIRE PROJECT, SHALL BE LOCATED BY THE CONTRACTOR AND UTILITY OWNERS PRIOR TO THE CONSTRUCTION OF THE PROJECT. ANY CONFLICTS SHALL BE COORDINATED BETWEEN CONTRACTOR, UTILITY OWNER AND ENGINEER.
9. ALL CULVERT CROSS DRAINS AND SIDE DRAINS SHALL BE PROTECTED. NO SEPARATE PAY ITEM WILL BE ESTABLISHED FOR REMOVAL AND REPLACEMENT, IF REQUIRED.
10. PROPER MAINTENANCE OF STREETS, INCLUDING DUST CONTROL, SHALL BE STRICTLY ADHERED TO.
11. MAINTENANCE OF TRAFFIC SHALL BE IN ACCORDANCE WITH THE MANUAL ON UNIFORM TRAFFIC CONTROL DEVICES (LATEST EDITION).
12. THE CONTRACTOR SHALL PROVIDE PROPER TRAFFIC CONTROL SIGNS AND FLAGGERS TO MAINTAIN ONE LANE TRAFFIC DURING CONSTRUCTION, WHERE LANE CLOSURES ARE NEEDED, UNLESS OTHERWISE DIRECTED BY THE ENGINEER. SEE SHEETS No. 250 & 251 FOR TYPICAL LANE CLOSURE DETAILS. ANY ROAD CLOSURES SHALL BE SUBMITTED TO THE ENGINEER FOR APPROVAL PRIOR TO IMPLEMENTATION.
13. ALL WORK ITEMS FOR WHICH NO PAY ITEMS ARE ESTABLISHED SHALL BE ABSORBED IN THE COST OF THE PIPE LAYING OPERATION.
14. ALL DISTURBED AREAS SHALL BE FERTILIZED AND SEEDED ACCORDING TO THE VEGETATION SCHEDULE IN THESE PLANS, UNLESS OTHERWISE NOTED.
15. ALL EXISTING MAILBOXES, STREET SIGNS, FENCES, AND OTHER STRUCTURES LOCATED WITHIN THE CONSTRUCTION LIMITS SHALL BE REMOVED AND RESET AS DICTATED BY CONSTRUCTION ACTIVITIES. (NO SEPARATE PAY)
16. NO PIPE SHALL BE LAID IN THE PRESENCE OF WATER.
17. WHERE THE WATER MAIN IS WITHIN 10 FEET OF A SEWER MAIN HORIZONTALLY, THE BOTTOM OF THE WATER MAIN SHALL BE AT LEAST 18" FROM THE TOP OF THE SEWER MAIN, UNLESS OTHERWISE NOTED.
18. THE COST OF CLEARING AND GRUBBING/REMOVAL AND DISPOSAL OF CLEARING AND GRUBBING MATERIAL SHALL TO BE INCLUDED IN THE PRICE OF THE PIPE LAYING OPERATION. OFFSITE DISPOSAL AREAS ARE TO BE FURNISHED BY THE CONTRACTOR.
19. ALL PAVED ROADS SHALL BE BORED WITH CASING, UNLESS OTHERWISE NOTED. ANY DAMAGE TO PAVED ROADS SHALL BE REPAIRED AS DETAILED AT THE CONTRACTOR'S EXPENSE.
20. ALL GRAVEL ROADS AND GRAVEL DRIVEWAYS SHALL BE OPEN CUT WITHOUT CASING, UNLESS OTHERWISE NOTED, AND REPLACED IN KIND.
21. ALL PAVED DRIVEWAYS SHALL BE BORED WITHOUT CASING, UNLESS OTHERWISE NOTED. ANY DAMAGE TO PAVED DRIVEWAYS SHALL BE REPAIRED IN KIND AT THE CONTRACTORS EXPENSE.
22. ALL CASINGS SHALL BE OF THE SIZE AND TYPE AS NOTED ON THESE PLANS.
23. ALL ROAD BORES SHALL BE IN ACCORDANCE TO THE DETAILS.
24. ALL WATER MAIN INSTALLATION SHALL CONTAIN 12 AWG. TRACER WIRE IN THE PIPE TRENCH AND ENTER ALL VALVE BOXES 12" ABOVE VALVE NUT WITH 12" OF WIRE COILED IN THE VALVE BOX.
25. ALL TRACER WIRE CONNECTIONS SHALL BE MADE WITH LIQUID FILLED CONNECTORS.
26. ALL WATER PIPE SHALL BE DUCTILE IRON, CLASS 350, AND/OR HDPE DR9, 200 PSI, AS NOTED ON PLANS.
27. ALL FITTINGS AND VALVES SHALL BE DUCTILE IRON WITH CONCRETE THRUST BLOCK AT ALL BENDS AND RODDED TOGETHER WITH ALL THREAD ROD. ALL TEES AND VALVES SHALL BE RODDED TOGETHER AS ONE UNIT. VALVES AND FIRE HYDRANTS SHALL BE RODDED TOGETHER BUT SEPARATE FROM THE TEE AND OTHER VALVES. ALL FITTINGS, EXCEPT VALVES SHALL BE ABSORBED ITEMS.
28. ALL BENDS SHOWN IN THE PROPOSED WATERLINE SHALL BE ACCOMPLISHED THROUGH THE USE OF THE REQUIRED FITTINGS (22.5°, 30°, 45°...). SINGLE 90° BEND FITTINGS SHALL NOT BE PERMITTED UNLESS SPECIFICALLY NOTED ON THE PLANS AND/OR APPROVED BY THE ENGINEER. 90° BENDS SHALL BE ACCOMPLISHED BY USING MULTIPLE SMALLER BEND FITTINGS. BENDS SHOWN ON THE PLAN SHEETS SHALL BE VERIFIED BY THE CONTRACTOR PRIOR TO BIDDING AND CONSTRUCTION. ONLY MAJOR BENDS ARE SHOWN ON THE PLANS. THE CONTRACTOR SHALL BE RESPONSIBLE FOR ALL FITTINGS NECESSARY TO INSTALL THE PROPOSED WATER LINE. (NO SEPARATE PAY) TEES SHALL BE PAID FOR UNDER THE CONNECTION ITEM.
36. ALL FIRE HYDRANTS SHOWN FOR INSTALLATION ON THE PLANS SHEETS SHALL BE 3-WAY HYDRANTS AS DETAILED. ALL FIRE HYDRANTS SHALL BE INSTALLED WITH A 2" DIAMETER BRASS TAG (SEE DETAIL) ENGRAVED WITH "CITY OF HATTIESBURG" AND "FH #XXX" (WHERE "XXX" WILL BE A NUMBER WHICH SHALL BE ASSIGNED TO EACH FIRE HYDRANT BY THE OWNER). (NO SEPARATE PAY)
37. ALL FIRE SUPPRESSION SYSTEM CONNECTIONS (FSSC) SHALL BE INSTALLED AS DETAILED. FSSC'S SHALL BE INSTALLED AT LOCATIONS TO BE DETERMINED BY THE OWNER. WHERE FSSC'S ARE TO BE INSTALLED, THE CONTRACTOR SHALL BE RESPONSIBLE FOR COORDINATION WITH THE FACILITY OWNER(S) AND THE EXISTING WATER SYSTEM OPERATOR PRIOR TO AND DURING INSTALLATION TO PREVENT UNNECESSARY INTERRUPTIONS.
38. FULL LENGTH PIPE SECTIONS ARE REQUIRED BEFORE AND AFTER ALL FITTINGS.
39. PRESSURE TESTS WILL BE REQUIRED ON ALL WATER MAIN INSTALLED.
40. PRIOR TO THE BEGINNING OF ANY EXCAVATION, ALL EXISTING PAVEMENT SHALL BE SCORED OR SAW CUT TO A DEPTH SUCH THAT A STRAIGHT AND UNIFORM VERTICAL EDGE IS ESTABLISHED PRIOR TO REMOVAL OF SAID PAVEMENT FROM THE PROJECT.
41. WORK FOR THIS PROJECT REQUIRES EXCAVATION IN THE IMMEDIATE VICINITY OF TRAFFIC AND ADJACENT PROPERTIES. THEREFORE, THE RISK OF A FAILURE OCCURRING DURING THE EXCAVATION REQUIRES THAT EXTREME CAUTION BE EXERCISED. THE CONTRACTOR SHALL BE RESPONSIBLE FOR PLACING WHAT BRACING, SHORING OR GROUND SUPPORT SYSTEM THAT IS DEEMED NECESSARY TO PREVENT A FAILURE AND PROTECT THE PERSONS WORKING NEAR THE EXCAVATION, THE PUBLIC THAT MAY BE ABOVE THE EXCAVATION, OR ANY STRUCTURE ADJACENT TO THE EXCAVATION. ALL COSTS FOR ANY PROTECTIVE MEASURES INCLUDING THE MATERIALS AND LABOR FOR DESIGNING, DRAWING AND CONSTRUCTING THE FACILITY SHALL BE INCLUDED IN THE BID PRICE FOR CONTRACT ITEMS.
42. THE EROSION CONTROL DEVICES SHALL BE REQUIRED AS DIRECTED BY THE ENGINEER. IT IS THE RESPONSIBILITY OF THE CONTRACTOR TO INSURE THAT SILT DOES NOT LEAVE THE CONSTRUCTION SITE OR CONTAMINATE WATERS OF THE U.S. DURING CONSTRUCTION. THE CONTRACTOR SHALL MAINTAIN THE PLAN DURING CONSTRUCTION.
43. ALL NEW CONSTRUCTION TO BE FLUSHED WITH CLOSE SUPERVISION OF THE SYSTEM OPERATOR.
44. ALL BACTI-SAMPLES SHALL BE TAKEN BY THE SYSTEM OPERATOR OR HIS REPRESENTATIVES. ANY AND ALL SAMPLING FEES SHALL BE THE RESPONSIBILITY OF THE CONTRACTOR.
45. THE CONTRACTOR SHALL HAVE A COMPETENT AND EXPERIENCED SUPERINTENDENT ON SITE AT ALL TIMES. THE SUPERINTENDENT SHALL NOT OPERATE EQUIPMENT WHILE ON THE PROJECT SITE. WORK ON THE PROJECT SHALL STOP IF THE ASSIGNED PROJECT SUPERINTENDENT IS NOT ON SITE.
46. **ABSOLUTELY NO SERVICES SHALL BE CONNECTED TO THIS PROJECT. ALL SERVICES DAMAGED DURING THIS PROJECT SHALL BE REPAIRED AT THE CONTRACTOR'S EXPENSE.**

PUBLIC UTILITIES

CABLE	COMCAST 2100 LINCOLN ROAD HATTIESBURG, MS 39402 (601) 264-1188
GAS	WILMUT GAS P.O. BOX 1649 HATTIESBURG, MS 39403 (601) 544-6001
POWER	MISSISSIPPI POWER, CO 6356 U.S. HIGHWAY 49 HATTIESBURG, MS 39401 (601) 544-6511
SEWER	CITY OF HATTIESBURG WATER & SEWER DEPT. 900 JAMES STREET HATTIESBURG, MS 39403 (601) 545-4530
TELEPHONE	AT&T P.O. BOX 1191 HATTIESBURG, MS 39401 (601) 545-6424
TRAFFIC	MISSISSIPPI DEPARTMENT OF TRANSPORTATION 6356 U.S. HIGHWAY 49 HATTIESBURG, MS 39401 (601) 544-6511
	CITY OF HATTIESBURG TRAFFIC DEPT. 125 WALNUT STREET HATTIESBURG, MS 39401 (601) 545-4626
WATER	CITY OF HATTIESBURG WATER & SEWER DEPARTMENT 900 JAMES STREET HATTIESBURG, MS 39403 (601) 545-4530

DETAILED INDEX

SHEET No.	DESCRIPTION
1	COVER SHEET
2	GENERAL NOTES, VICINITY MAP AND DETAILED INDEX
3	WATER MAIN ALONG U.S. HWY. 11 (VETERANS BLVD)
4	WATER MAIN ALONG U.S. HWY. 11 (VETERANS BLVD)
5	WATER MAIN ALONG U.S. HWY. 11 (VETERANS BLVD)
6	WATER MAIN ALONG I-59
7	WATER MAIN ALONG I-59
8	WATER MAIN ALONG I-59
9	WATER INSTALLATION DETAILS
10	WATER INSTALLATION DETAILS
11	VEGETATION SCHEDULE
12	TYPICAL TEMPORARY EROSION/SEDIMENT CONTROL APPLICATIONS
13	DETAILS OF SEDIMENT BARRIER APPLICATIONS
14	DETAILS OF SILT FENCE INSTALLATION
15	DITCH CHECK STRUCTURES, TYPICAL APPLICATIONS AND DETAILS
16	DETAILS OF EROSION CONTROL WATTLE DITCH CHECK
17	INLET PROTECTION DETAILS OF WATTLES
250	TRAFFIC CONTROL PLAN WITH FLAGGER (ONE-LANE CLOSURE OF TWO-WAY TRAFFIC)
251	TRAFFIC CONTROL PLAN FOR POSTED SPEED LIMIT LESS THAN 65 MPH

KYLE D. WALLACE
REGISTERED PROFESSIONAL ENGINEER
12693
10/24/2012
STATE OF MISSISSIPPI

GRAPHIC SCALE

1000 0 500 1000 2000 4000

(IN FEET)
1 inch = 1000 ft.

NO.	DATE	DESCRIPTION	BY

GENERAL NOTES, VICINITY MAP & DETAILED INDEX

VETERANS BOULEVARD WATER CONNECTION
CITY OF HATTIESBURG
FORREST & LAMAR COUNTIES, MISSISSIPPI

SD&W
SHOWS, DEARMAN & WAITS, INC.
CONSULTING ENGINEERS
P.O. BOX 1711
HATTIESBURG, MISSISSIPPI, 39403-1711
301 SECOND AVENUE
HATTIESBURG, MISSISSIPPI, 39401
HTTP://WWW.SD-W.COM
P: (601) 544 - 1821
F: (601) 544 - 0501

Drawn by: PAT	Checked by: KDW
Date: JULY 13, 2012	Scale: AS NOTED
Drawing No.: 1270	Sheet No. 2

G:\PROJECTS\Hattiesburg_City of\1270 - Veterans Blvd Water Connector\1270\dwg\1270_crvmapnotes.dwg, 2, 10/23/2012 8:00:25 AM

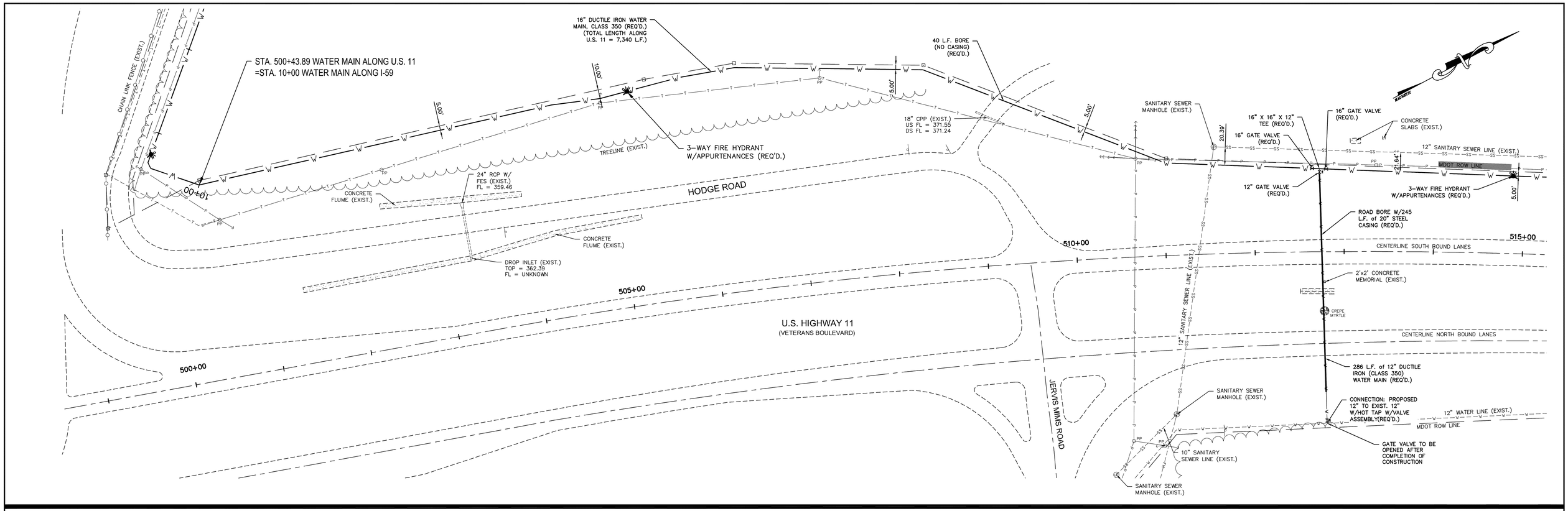

NO.	DATE	DESCRIPTION	BY

WATER MAIN ALONG U.S. HWY. 11 (VETERANS BLVD.)

VETERANS BOULEVARD WATER CONNECTION
CITY OF HATTIESBURG
FORREST & LAMAR COUNTIES, MISSISSIPPI

SHOWS, DEARMAN & WAITS, INC.
CONSULTING ENGINEERS
P.O. BOX 1711
HATTIESBURG, MISSISSIPPI, 39403-1711
301 SECOND AVENUE
HATTIESBURG, MISSISSIPPI, 39401
HTTP://WWW.SD-W.COM
P: (601) 544 - 1821
F: (601) 544 - 0501

Drawn by: LLS	Checked by: KDW
Date: JULY 13, 2012	Scale: 1" = 50'
Drawing No.: 1270	Sheet No. 3

G:\PROJECTS\Hattiesburg_City of\1270 - Veterans Blvd Water Connection\1270dwg\1270_pln.dwg, 3, 10/24/2012 9:29:44 AM

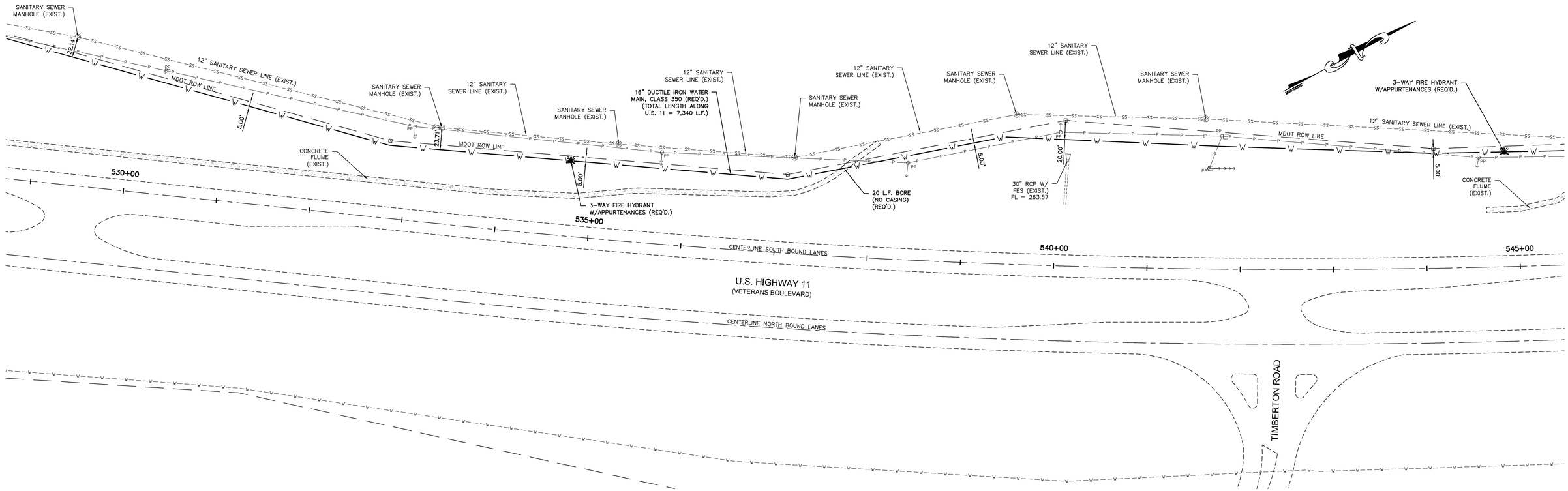

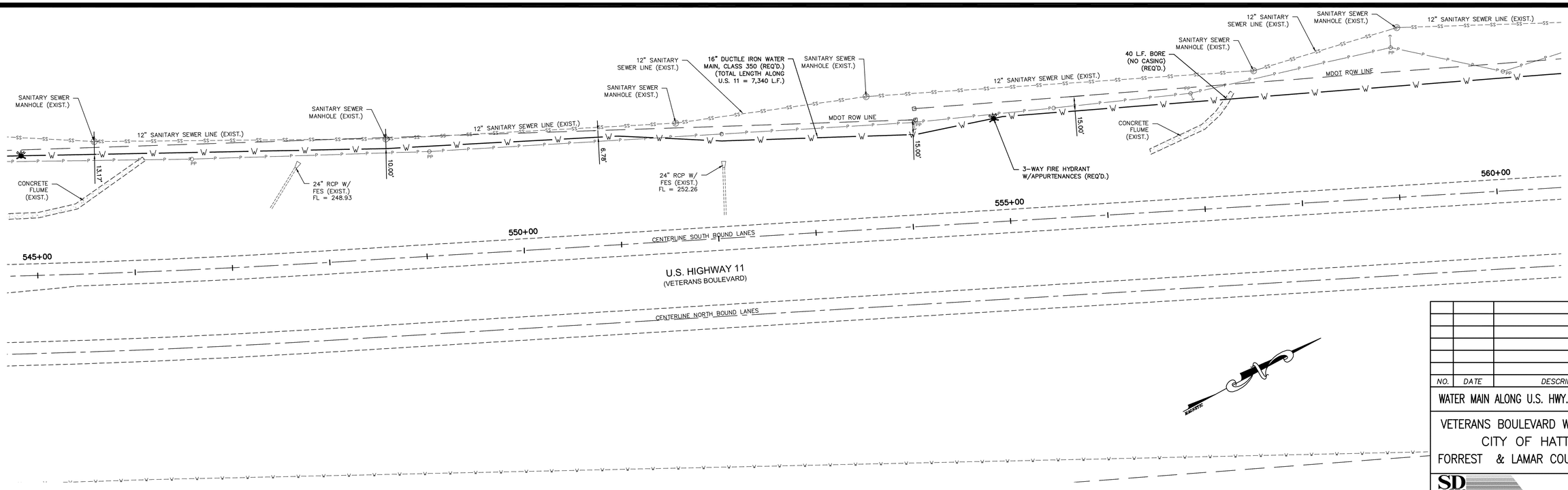

NO.	DATE	DESCRIPTION	BY

WATER MAIN ALONG U.S. HWY. 11 (VETERANS BLVD.)

VETERANS BOULEVARD WATER CONNECTION
CITY OF HATTIESBURG
FORREST & LAMAR COUNTIES, MISSISSIPPI

SHOWS, DEARMAN & WAITS, INC.
CONSULTING ENGINEERS
P.O. BOX 1711
HATTIESBURG, MISSISSIPPI, 39403-1711
301 SECOND AVENUE
HATTIESBURG, MISSISSIPPI, 39401
HTTP://WWW.SD-W.COM
P: (601) 544 - 1521
F: (601) 544 - 0501

Drawn by: LLS	Checked by: KDW
Date: JULY 13, 2012	Scale: 1" = 50'
Drawing No.: 1270	Sheet No. 4

G:\PROJECTS\Hattiesburg_City of\1270 - Veterans Blvd Water Connection\1270vbwg\1270_plu.dwg, 4, 10/24/2012 9:29:49 AM

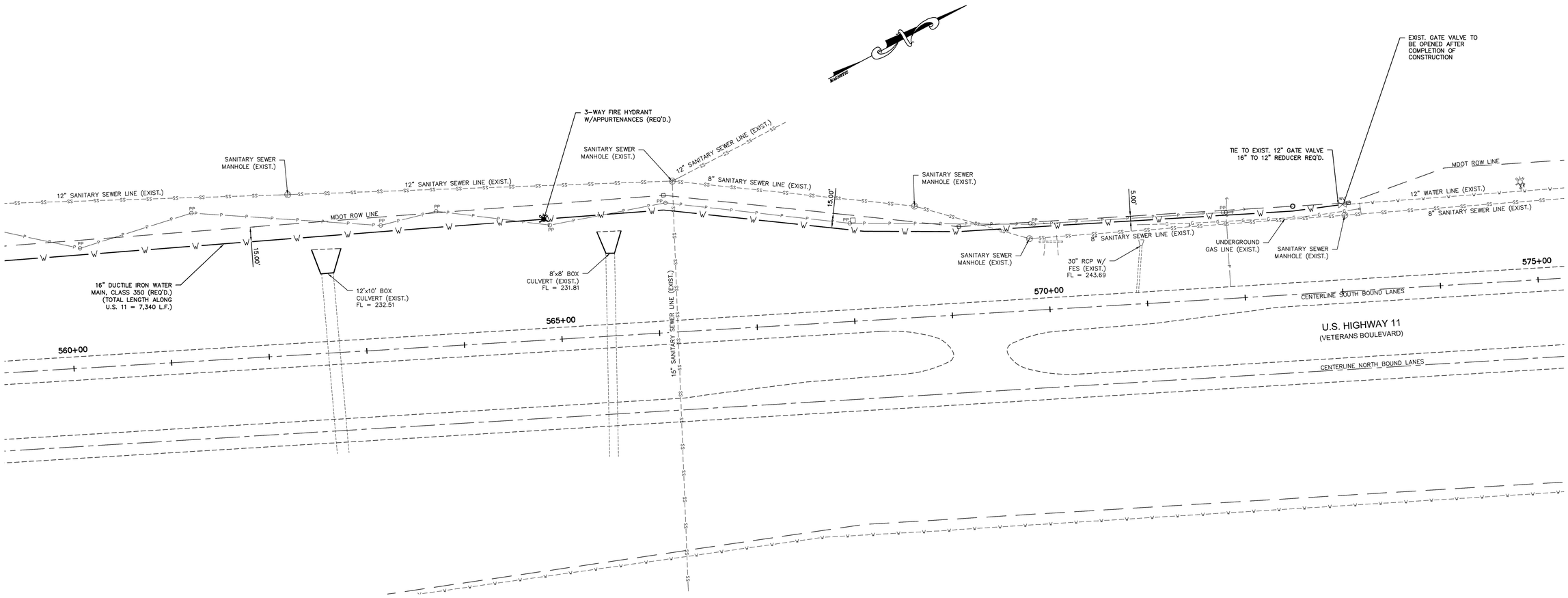

NO.	DATE	DESCRIPTION	BY

WATER MAIN ALONG U.S. HWY. 11 (VETERANS BLVD.)

VETERANS BOULEVARD WATER CONNECTION
CITY OF HATTIESBURG
FORREST & LAMAR COUNTIES, MISSISSIPPI

SHOWS, DEARMAN & WAITS, INC.
CONSULTING ENGINEERS
P.O. BOX 1711
HATTIESBURG, MISSISSIPPI, 39403-1711
301 SECOND AVENUE
HATTIESBURG, MISSISSIPPI, 39401
HTTP://WWW.SD-W.COM
P: (601) 544 - 1521
F: (601) 544 - 0501

Drawn by: LLS	Checked by: KDW
Date: JULY 13, 2012	Scale: 1" = 50'
Drawing No.: 1270	Sheet No. 5

G:\PROJECTS\Hattiesburg_City of\1270 - Veterans Blvd Water Connector\1270.dwg\1270_plu.dwg, 5, 10/24/2012 9:29:54 AM

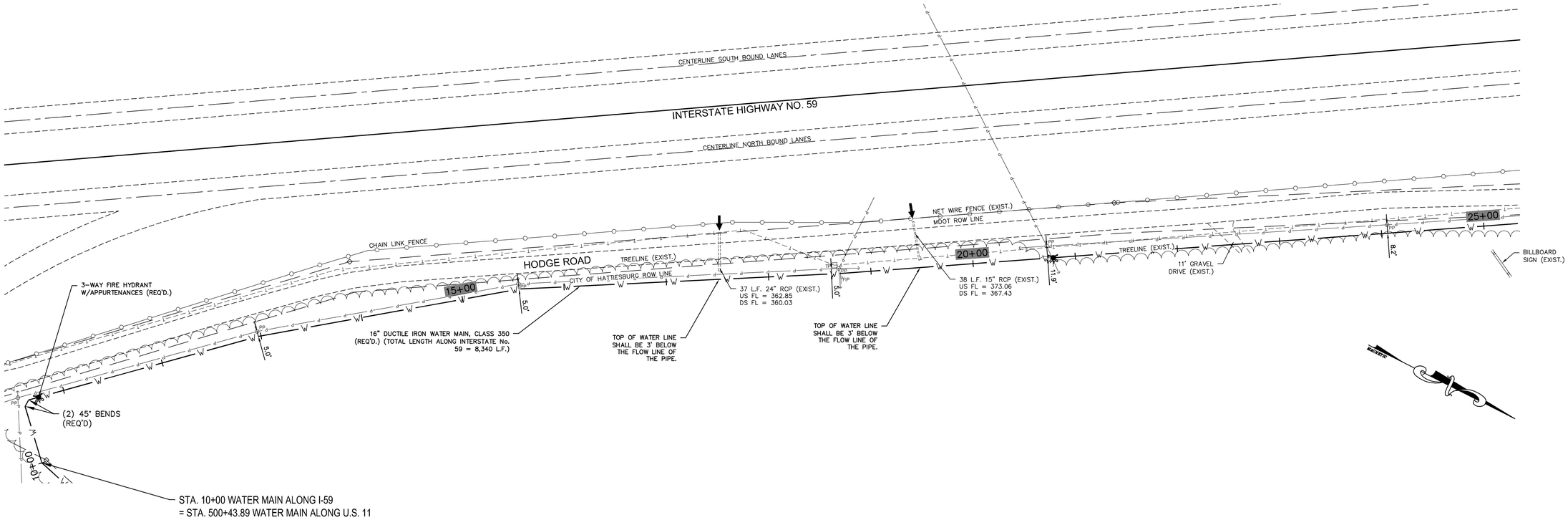

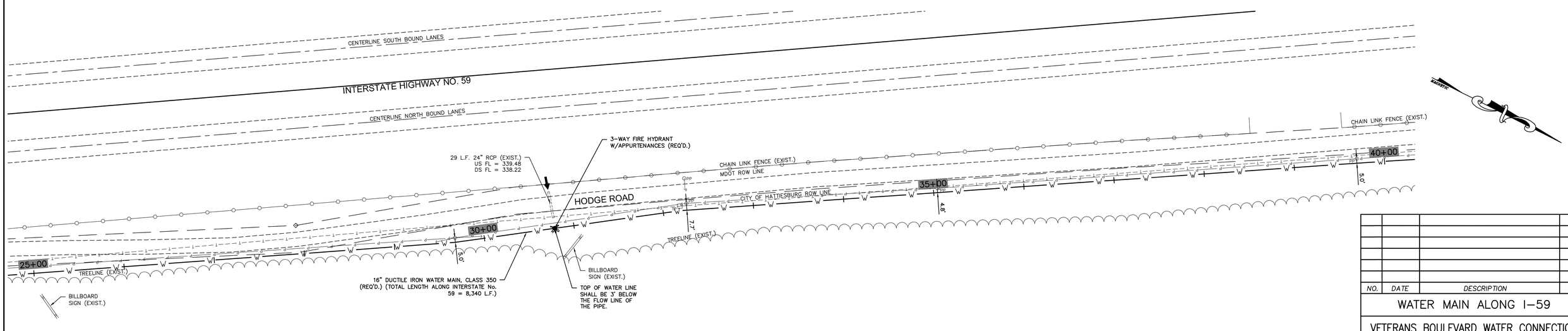

NO.	DATE	DESCRIPTION	BY

WATER MAIN ALONG I-59

VETERANS BOULEVARD WATER CONNECTION
CITY OF HATTIESBURG
FORREST & LAMAR COUNTIES, MISSISSIPPI

SHOWS, DEARMAN & WAITS, INC.
CONSULTING ENGINEERS
P.O. BOX 1711
HATTIESBURG, MISSISSIPPI, 39403-1711
301 SECOND AVENUE
HATTIESBURG, MISSISSIPPI, 39401
HTTP://WWW.SD-W.COM
P: (601) 544 - 1821
F: (601) 544 - 0501

Drawn by: LLS	Checked by: KDW
Date: JULY 13, 2012	Scale: 1" = 50'
Drawing No.: 1270	Sheet No. 6

G:\PROJECTS\Hattiesburg_City of\1270 - Veterans Blvd Water Connection\1270dwg\1270_pln.dwg, 6, 10/24/2012 9:29:59 AM

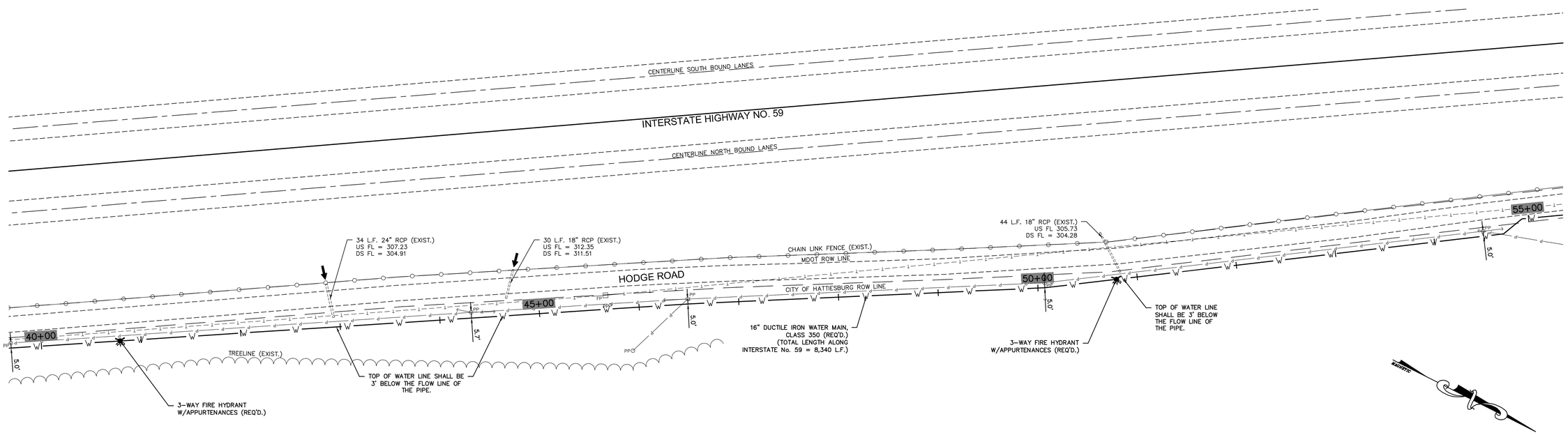

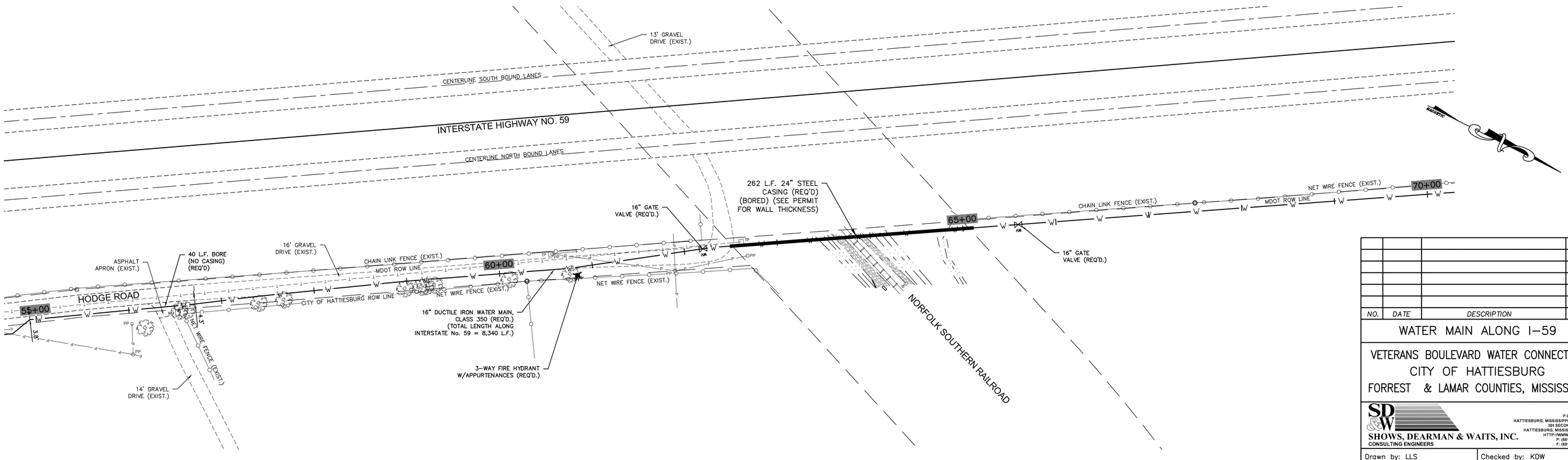

NO.	DATE	DESCRIPTION	BY

WATER MAIN ALONG I-59

VETERANS BOULEVARD WATER CONNECTION
CITY OF HATTIESBURG
FORREST & LAMAR COUNTIES, MISSISSIPPI

SHOWS, DEARMAN & WAITS, INC.
CONSULTING ENGINEERS
P.O. BOX 1711
HATTIESBURG, MISSISSIPPI, 39403-1711
301 SECOND AVENUE
HATTIESBURG, MISSISSIPPI, 39401
HTTP://WWW.SD-W.COM
P: (601) 544 - 1821
F: (601) 544 - 0501

Drawn by: LLS	Checked by: KDW
Date: JULY 13, 2012	Scale: 1" = 50'
Drawing No.: 1270	Sheet No. 7

G:\PROJECTS\Hattiesburg_City of\1270 - Veterans Blvd Water Connection\1270dwg\1270_pu.dwg, 7, 10/24/2012 9:30:05 AM

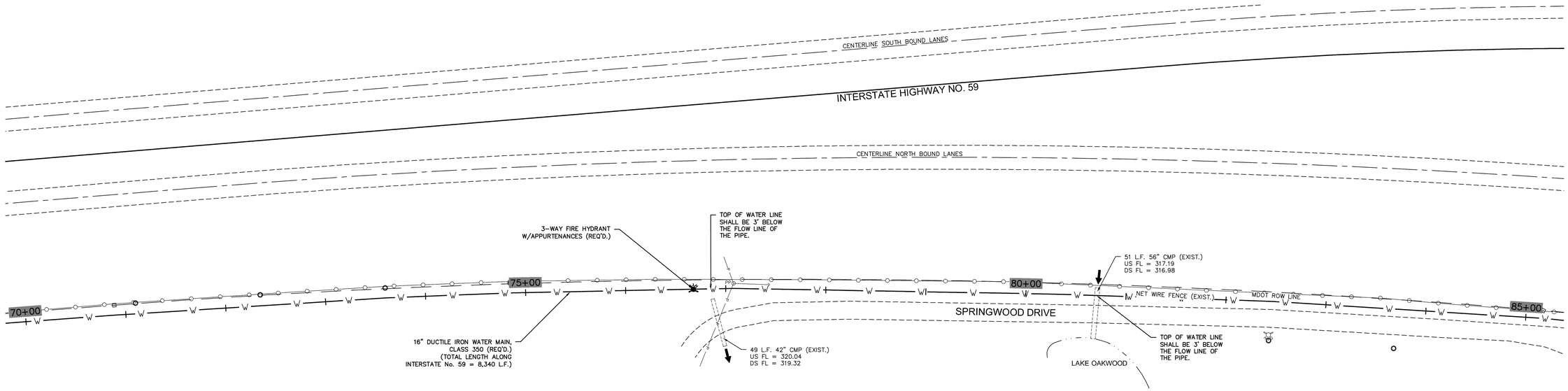

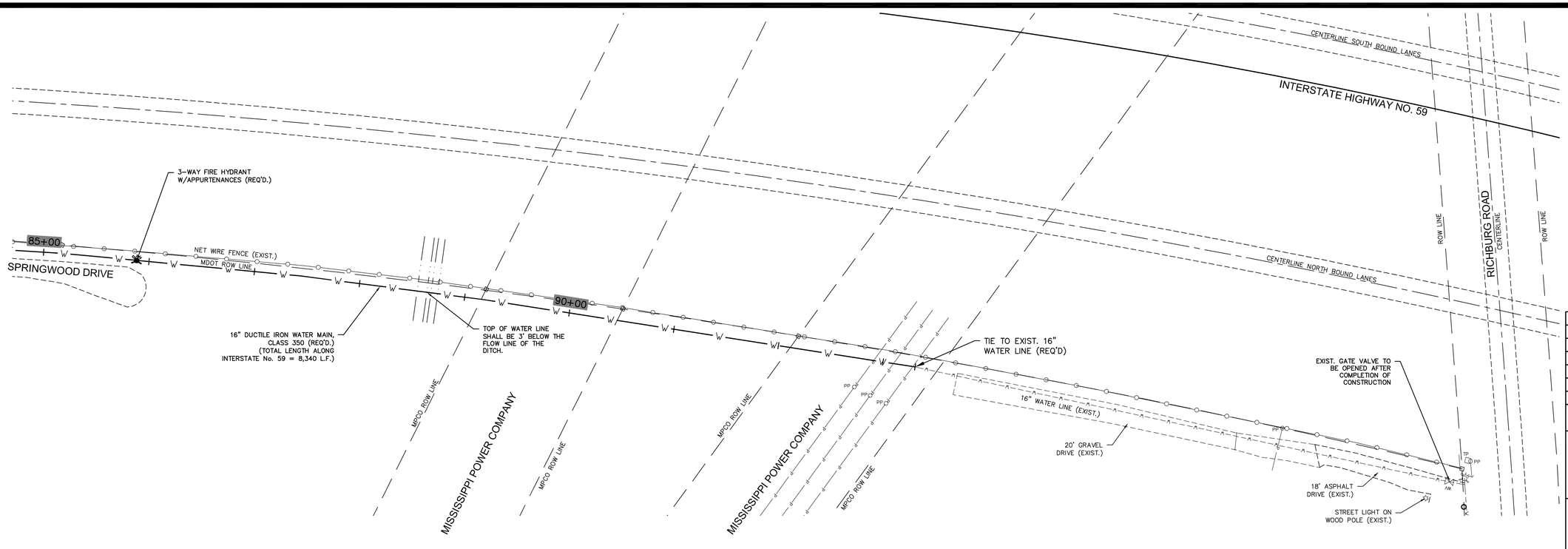

NO.	DATE	DESCRIPTION	BY

WATER MAIN ALONG I-59

VETERANS BOULEVARD WATER CONNECTION
CITY OF HATTIESBURG
FORREST & LAMAR COUNTIES, MISSISSIPPI

SHOWS, DEARMAN & WAITS, INC.
CONSULTING ENGINEERS
P.O. BOX 1711
HATTIESBURG, MISSISSIPPI, 39403-1711
301 SECOND AVENUE
HATTIESBURG, MISSISSIPPI, 39401
HTTP://WWW.SD-W.COM
P: (601) 544 - 1821
F: (601) 544 - 0501

Drawn by: LLS	Checked by: KDW
Date: JULY 13, 2012	Scale: 1" = 50
Drawing No.: 1270	Sheet No. 8

G:\PROJECTS\Hattiesburg_City of\1270 - Veterans Blvd Water Connection\1270\dwg\1270_pla.dwg, 8, 10/24/2012 9:30:09 AM

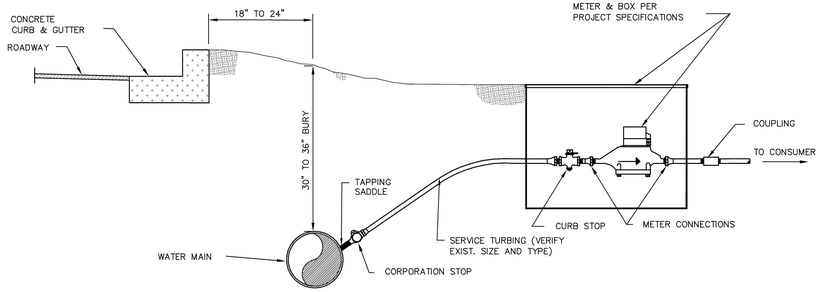

NOTE: THIS DETAIL SHALL BE USED FOR REPAIR OF EXISTING SERVICES DAMAGED DURING CONSTRUCTION. NO SERVICES SHALL BE CONNECTED TO PROPOSED WATER MAINS IN THIS PROJECT.

TYPICAL METER SETTING WITHOUT YOKE

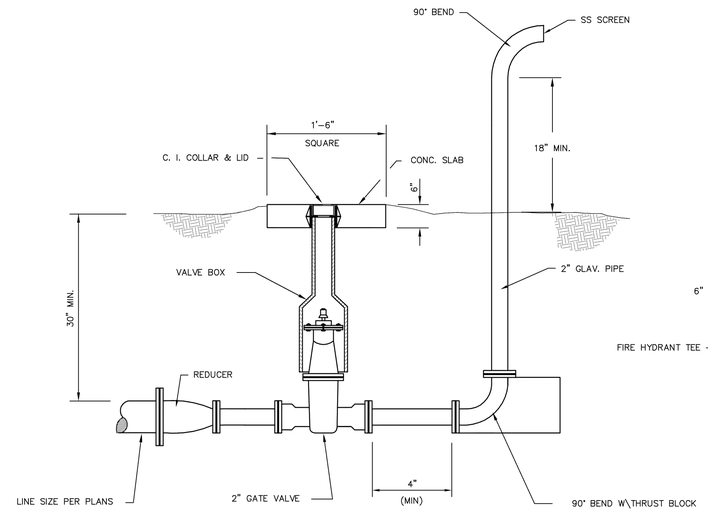

BLOW-OFF VALVE DETAIL

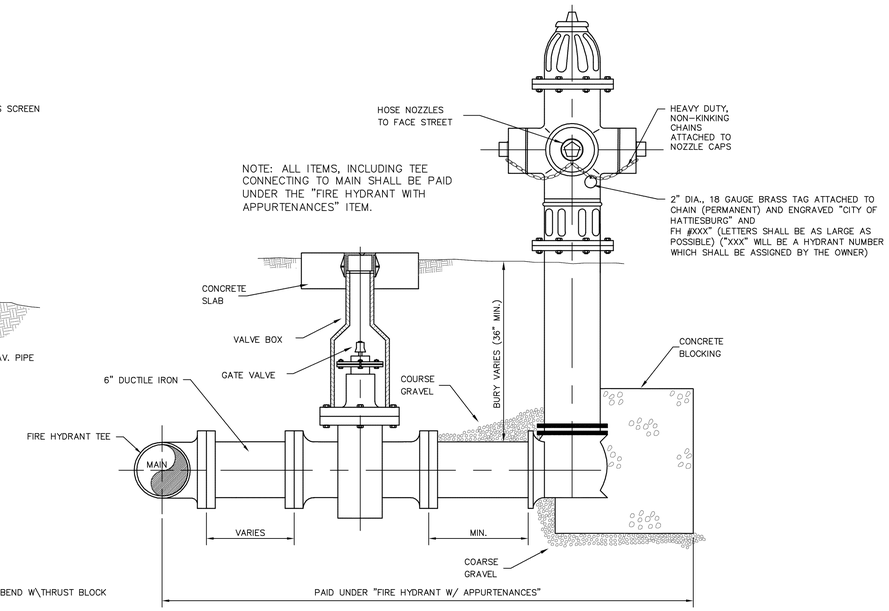

NOTE: ALL ITEMS, INCLUDING TEE CONNECTING TO MAIN SHALL BE PAID UNDER THE "FIRE HYDRANT WITH APPURTENANCES" ITEM.

STANDARD 3-WAY FIRE HYDRANT

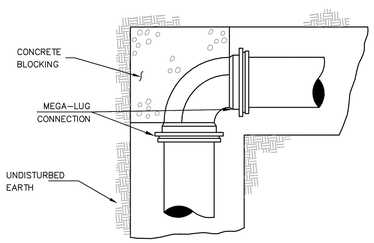

PLAN

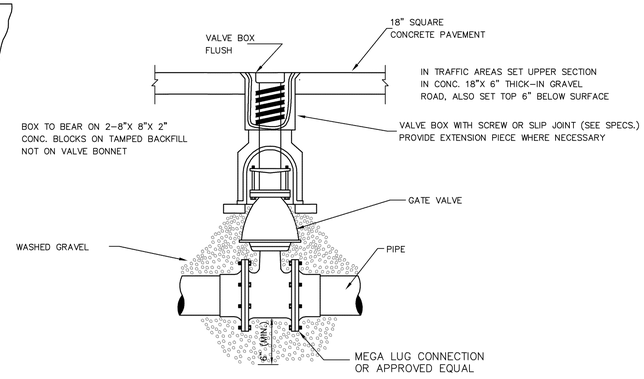

DETAIL OF VALVE & BOX

NOTE: ALL ITEMS, INCLUDING TEE CONNECTING TO MAIN, VALVE, PIPE, CONNECTION TO EXITING FIRE LINE AND DISCONNECTION OF EXISTING FIRE LINE FROM EXISTING SYSTEM MAIN SHALL BE PAID UNDER THE "FIRE SUPPRESSION SYSTEM CONNECTION" ITEM.

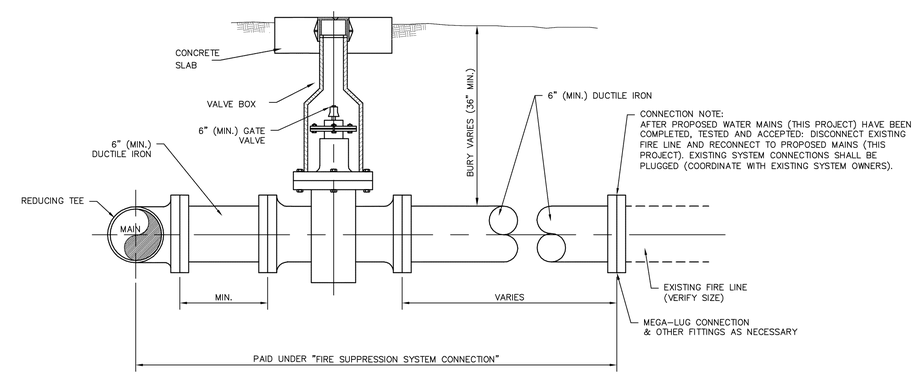

FIRE SUPPRESSION SYSTEM CONNECTION

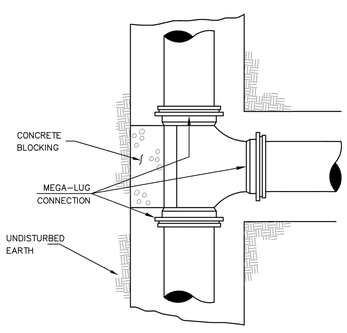

PLAN

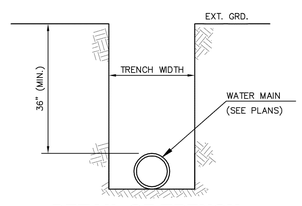

DETAIL OF TRENCH

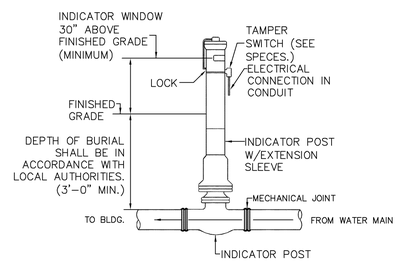

POST INDICATOR VALVE DETAIL

PIV NOTES:

1. POST INDICATOR VALVES SHALL BE REQUIRED AT ALL EXISTING STRUCTURES WHICH ARE BEING CONNECTED TO THE PROPOSED SYSTEM UNDER THIS PROJECT, IF THE EXISTING PIV IS DAMAGED AND/OR INOPERABLE OR IF NO PIV IS IN PLACE AT THE TIME OF CONNECTION.
2. LOCATIONS FOR PROPOSED PIV'S SHALL BE AS DIRECTED BY THE ENGINEER BUT SHALL BE AT LEAST 40 FEET FROM THE EXISTING STRUCTURE AND CLEARLY VISIBLE.
3. POST INDICATOR VALVES SHALL BE INSTALLED AS PER THE MANUFACTURER'S SPECIFICATIONS AND AS DETAILED HERE.
4. ALL ITEMS, INCLUDING POSSIBLE INSTALLATION ON EXISTING FIRE LINE SHALL BE PAID UNDER THE "POST INDICATOR VALVE" ITEM.

NO.	DATE	DESCRIPTION	BY

WATER INSTALLATION DETAILS

VETERANS BOULEVARD WATER CONNECTION
CITY OF HATTIESBURG
FORREST & LAMAR COUNTIES, MISSISSIPPI

SHOWS, DEARMAN & WAITS, INC.
CONSULTING ENGINEERS
P.O. BOX 1711
HATTIESBURG, MISSISSIPPI, 39403-1711
301 SECOND AVENUE
HATTIESBURG, MISSISSIPPI, 39401
HTTP://WWW.SD-W.COM
P: (601) 544 - 1521
F: (601) 544 - 0501

Drawn by: PAT	Checked by: KDW
Date: JULY 13, 2012	Scale: NOT TO SCALE
Drawing No.: 1270	Sheet No. 9

G:\PROJECTS\Hattiesburg_City of\1270 - Veterans Blvd Water Connector\1270dwg\1270_wtdts.dwg, 9/10/2012 9:26:52 AM

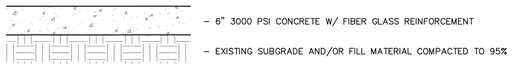

TYPICAL CONCRETE PAVEMENT REPAIR

PAVEMENT REPAIR NOTE:
PAVEMENT REPAIR SHALL BE MEASURED BY THE LENGTH OF THE TRENCH IN THE PAVED AREA AND 5'–0" (MAX.) WIDTH AS MEASURED PERPENDICULAR TO THE INSTALLED WATER LINE.

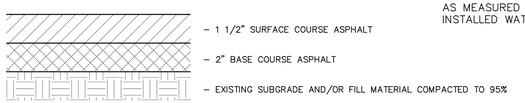

TYPICAL ASPHALT PAVEMENT REPAIR

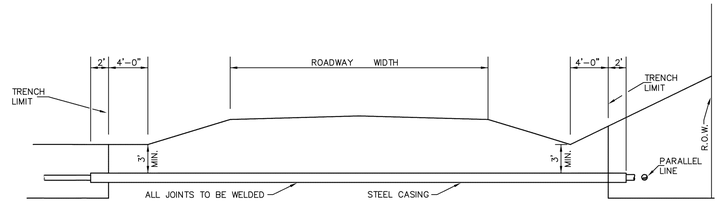

STEEL CASING TO BE INSTALLED BY JACKING THROUGH, WET BORE OR DRY BORE (AS SPECIFIED) OF A SIZE NOT GREATER OR LESS THAN 1" OF O.D. OF ENCASEMENT. LAYING STEEL CASING IN OPEN TRENCH WILL BE PERMITTED ONLY WHEN SET OUT IN THE SPECIFICATIONS AND WITH THE APPROVAL OF THE MISSISSIPPI DEPARTMENT OF TRANSPORTATION.

HIGHWAY CROSSING & WATER LINE PARALLELING HWY. IN R.O.W.

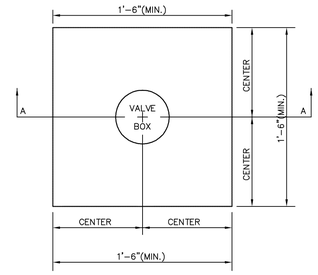

PLAN

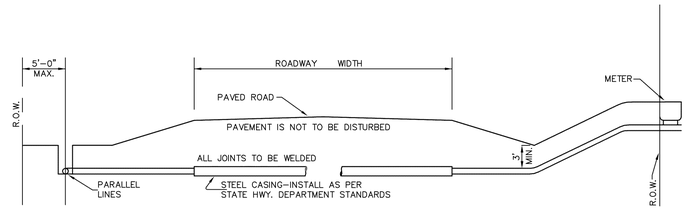

ROAD BORE & WATER LINE PARALLELING ROAD IN R.O.W.

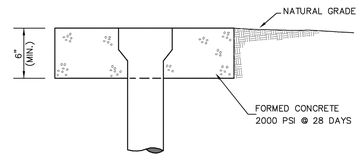

SECTION A-A

VALVE LOCATION

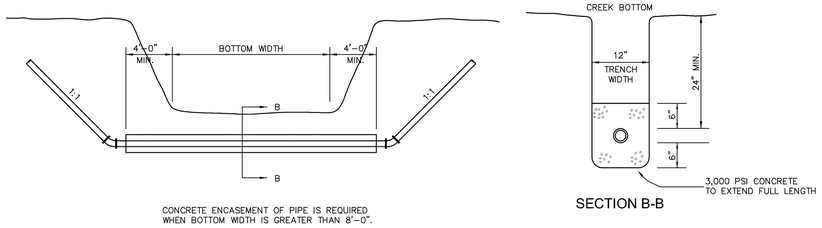

CONCRETE ENCASEMENT OF PIPE IS REQUIRED WHEN BOTTOM WIDTH IS GREATER THAN 8'–0".

SECTION B-B

OPEN CUT CHANNEL CROSSING DETAIL

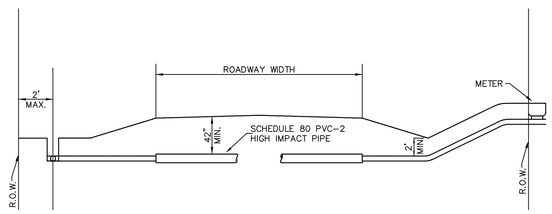

COUNTY GRAVEL ROAD & WATER LINE PARALLELING ROAD IN R.O.W.

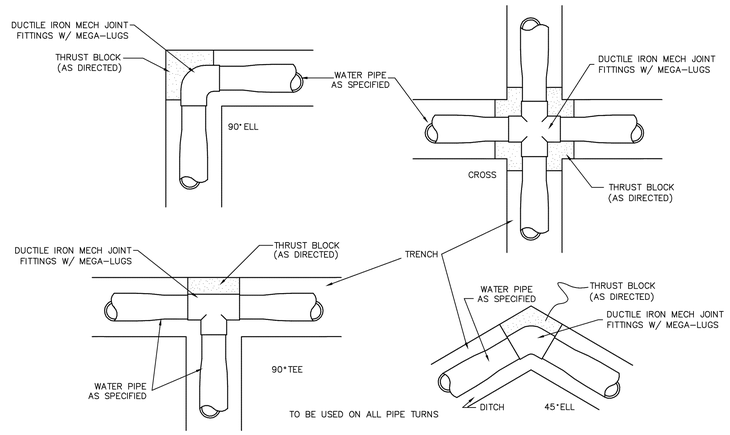

THRUST BLOCK DETAILS

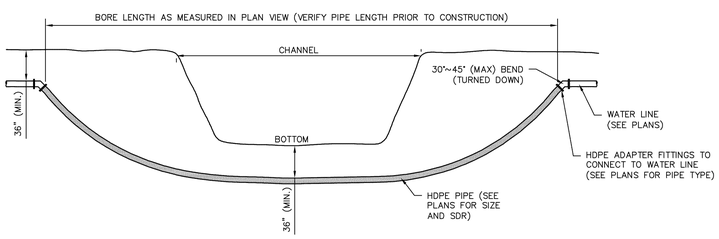

DIRECTIONAL BORED CHANNEL CROSSING DETAIL

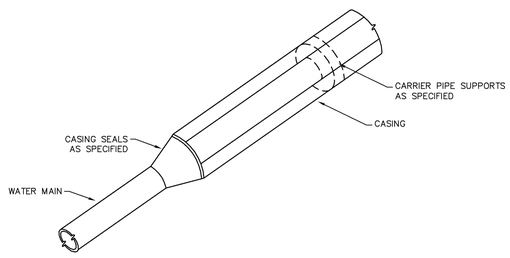

CASING END DETAIL

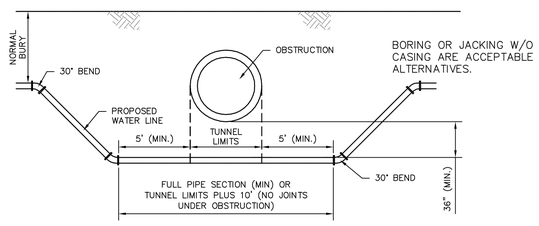

OBSTRUCTION CROSSING DETAIL

NO.	DATE	DESCRIPTION	BY

WATER INSTALLATION DETAILS

VETERANS BOULEVARD WATER CONNECTION
CITY OF HATTIESBURG
FORREST & LAMAR COUNTIES, MISSISSIPPI

SHOWS, DEARMAN & WAITS, INC.
CONSULTING ENGINEERS
P.O. BOX 1711
HATTIESBURG, MISSISSIPPI, 39403-1711
301 SECOND AVENUE
HATTIESBURG, MISSISSIPPI, 39401
HTTP://WWW.SD-W.COM
P: (601) 544 - 1521
F: (601) 544 - 6501

Drawn by: PAT	Checked by: KDW
Date: JULY 13, 2012	Scale: NOT TO SCALE
Drawing No.: 1270	Sheet No. 10

G:\PROJECTS\Hattiesburg_City of\1270 - Veterans Blvd Water Connector\1270dwg\1270_wtrdtls.dwg, 10, 10/24/2012 9:20:55 AM

STATE	PROJECT NO.
MISS.	

NOTES:

1. "J-HOOK" CONFIGURATION SILT FENCE APPLICATIONS ARE TO BE USED IN CONJUNCTION WITH PERIMETER SILT FENCE WHEN STORMWATER RUNOFF IS IN TWO DIRECTIONS (DOWN A FILL SLOPE AND DOWN GRADIENT ALONG THE RIGHT-OF-WAY).
2. "SMILE CONFIGURATION" APPLICATIONS ARE TO BE USED AS PERIMETER SILT FENCE WHEN THERE IS ONE-DIRECTIONAL FLOW DOWN A SLOPE.
3. SAND BAGS CAN BE USED AS DIVERSION BERMS TO PREVENT SEDIMENT FROM BEING WASHED ONTO OR ACROSS HARD SURFACES, OR TO HELP SLOW SHEET FLOW VELOCITY WHEN DRAINING AWAY FROM HARD SURFACES.
4. FOR SHORTER SLOPES AND/OR SLOPES THAT ARE LESS STEEP, DIVERSION BERMS CAN BE USED TO SAFELY CONVEY STORMWATER AWAY FROM OR AROUND A DENUDED AREA. THEY CAN BE CONSTRUCTED USING A MANUFACTURED SILT DIKE OR BY CONSTRUCTING A TEMPORARY EARTH BERM AND TRENCH WITH GEOTEXTILE OR POLYETHYLENE SHEETING PROTECTION.
5. TEMPORARY DEWATERING STRUCTURES CAN BE USED DURING CULVERT CONSTRUCTION, STREAM DIVERSIONS, OR OTHER CONSTRUCTION ACTIVITIES WHERE TURBID WATERS NEED TO BE CLARIFIED BEFORE RELEASE.
6. THE ABUTMENT SLOPE TOE BERM SHALL BE 3 FEET TALL. THE BERM MAY BE CONSTRUCTED WITH ROCK IN ACCORDANCE WITH REQUIREMENTS FOR ROCK DITCH CHECKS ON ECD-8 OR WITH SOIL IN ACCORDANCE WITH TEC-2 IF BERM IS USED, IT MUST BE GRASSED

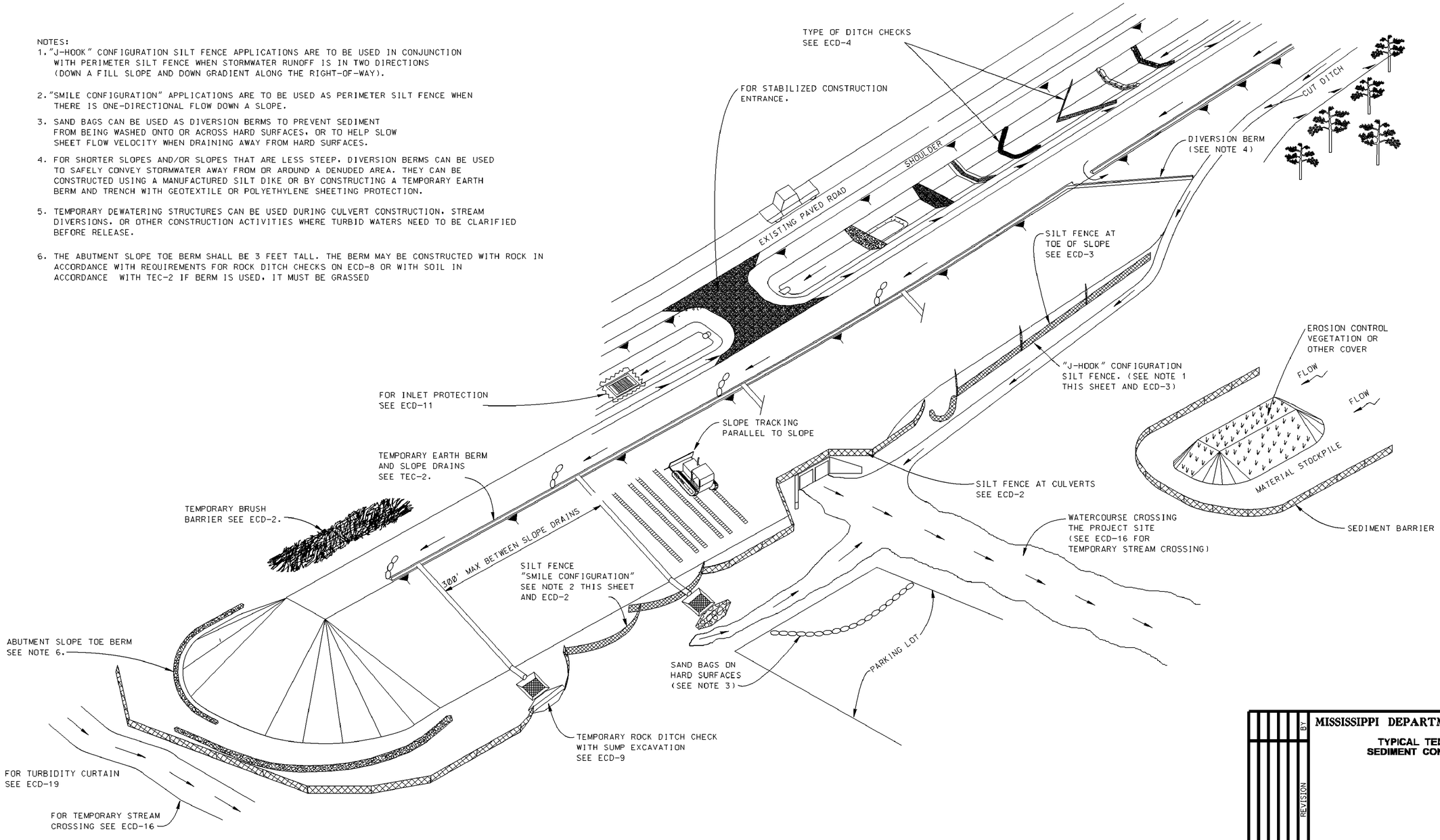

REVISION	BY	DATE

MISSISSIPPI DEPARTMENT OF TRANSPORTATION

TYPICAL TEMPORARY EROSION/ SEDIMENT CONTROL APPLICATIONS

FILENAME: EROSION CONTROL\ECD-1.DGN

DESIGN TEAM _____ CHECKED _____ DATE _____

WORKING NUMBER
ECD-1

SHEET NUMBER
11

DRAWING No.: 1270

PLAN
ROADWAY DESIGN DIVISION
MISSISSIPPI DEPARTMENT OF TRANSPORTATION

1/19/2010 12:18PM ECD-1.DGN

STATE	PROJECT NO.
MISS.	

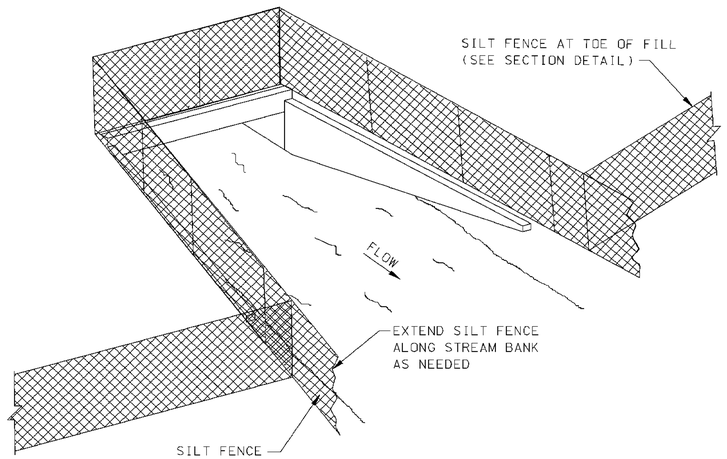

SEDIMENT BARRIER AT CROSS DRAIN

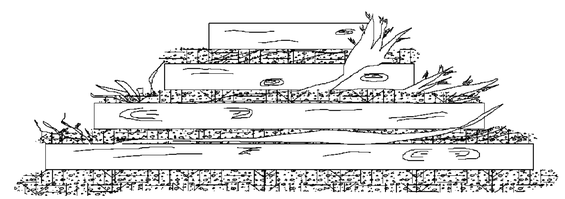

FRONT ELEVATION

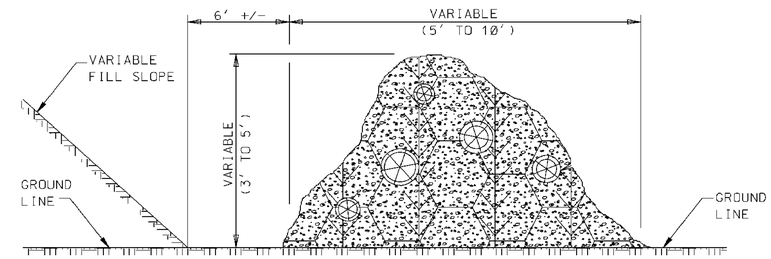

SIDE ELEVATION

TEMPORARY BRUSH BARRIER

NOTES:
1. BRUSH BARRIER MAY BE USED WHERE NATURAL GROUND IS LEVEL OR SLOPING AWAY FROM PROJECT.
2. PLACE BRUSH, LOG AND TREE LAPS APPROXIMATELY PARALLEL TO TOE OF FILL SLOPE WITH SOME OF THE HEAVIER MATERIALS BEING PLACED ON TOP TO PROPERLY SECURE THE BARRIER AS DETAILED AT LOCATIONS SHOWN ON PLANS OR AS DIRECTED OR PERMITTED BY THE ENGINEER.
3. TO ALLOW WATER TO SEEP THROUGH BRUSH BARRIER, INTERMINGLE THE BRUSH, LOG AND TREE LAPS SO AS NOT TO FORM A SOLID DAM.
4. THE BRUSH BARRIER MAY BE CHOKED WITH FILTER FABRIC.
5. TEMPORARY BRUSH BARRIER WILL NOT BE MEASURED FOR SEPERATE PAYMENT

NOTE:
1. ANCHOR AND INSTALL SILT FENCE PER DETAILS SHOWN ON ECD-3

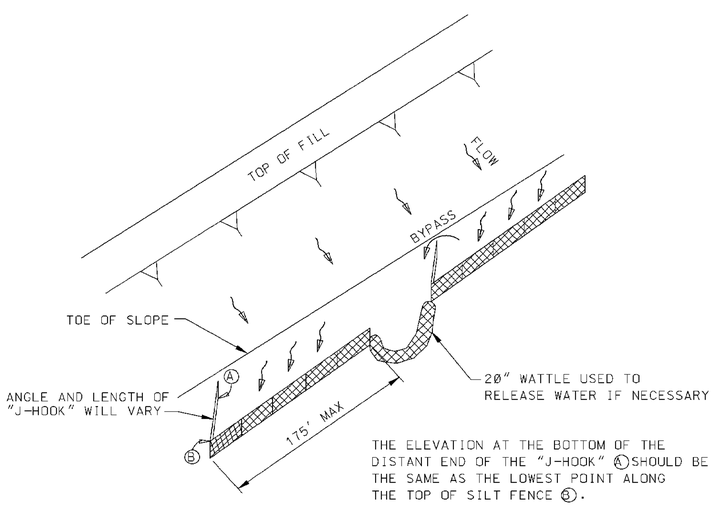

THE ELEVATION AT THE BOTTOM OF THE DISTANT END OF THE "J-HOOK" (A) SHOULD BE THE SAME AS THE LOWEST POINT ALONG THE TOP OF SILT FENCE (B).

"J-HOOK" SILT FENCE APPLICATION

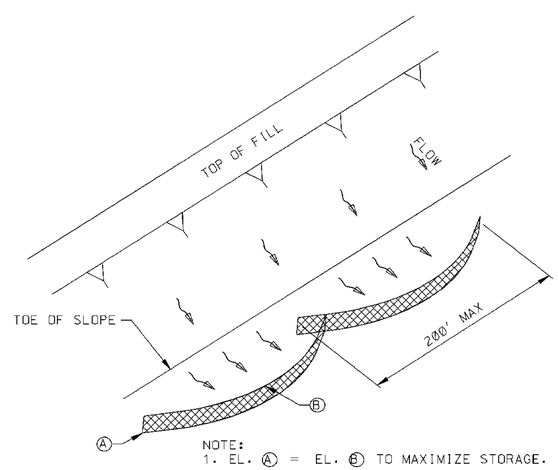

NOTE:
1. EL. (A) = EL. (B) TO MAXIMIZE STORAGE.

"SMILE-CONFIGURATION" SILT FENCE APPLICATION

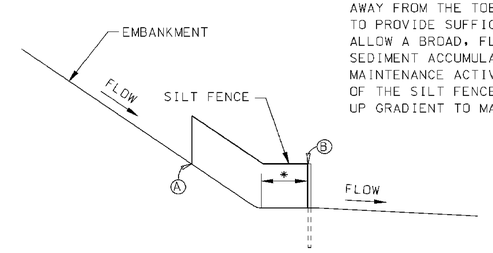

* SILT FENCE SHOULD BE LOCATED AWAY FROM THE TOE OF THE SLOPE TO PROVIDE SUFFICIENT SPACE TO ALLOW A BROAD, FLAT AREA FOR SEDIMENT ACCUMULATION AND MAINTENANCE ACTIVITIES. THE ENDS OF THE SILT FENCE SHOULD BE TURNED UP GRADIENT TO MAXIMIZE STORAGE.

SILT FENCE SECTION AT TOE OF FILL

REVISION	BY	DATE

MISSISSIPPI DEPARTMENT OF TRANSPORTATION

DETAILS OF SEDIMENT BARRIER APPLICATIONS

WORKING NUMBER ECD-2

FILENAME: EROSION CONTROL\ECD-2.DGN

DESIGN TEAM_____ CHECKED_____ DATE_____

SHEET NUMBER 12

DRAWING No.: 1270

PLAN
ROADWAY DESIGN DIVISION
MISSISSIPPI DEPARTMENT OF TRANSPORTATION
1/28/2010 8:54 AM ECD-2.DGN

STATE	PROJECT NO.
MISS.	

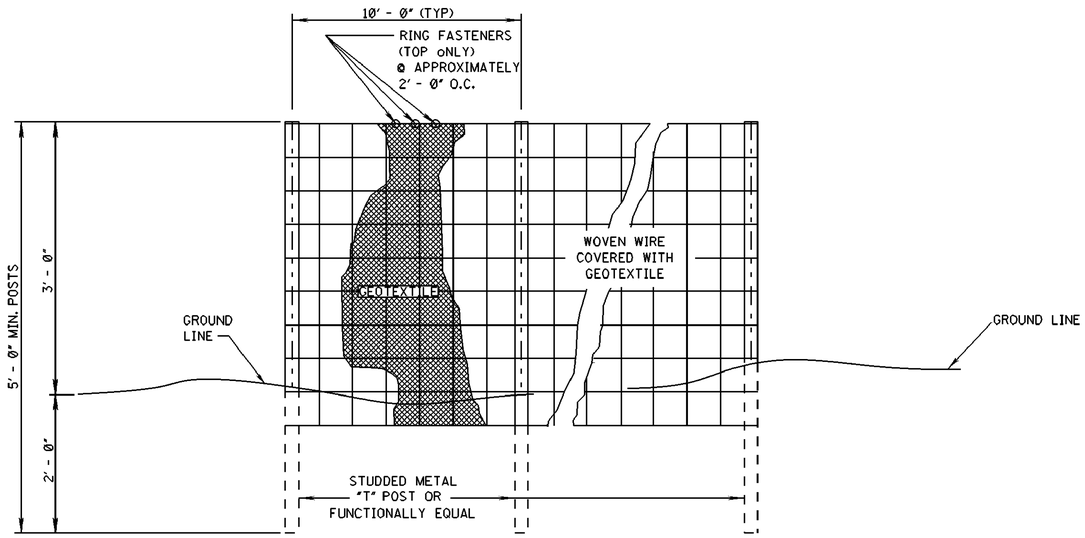

ELEVATION VIEW

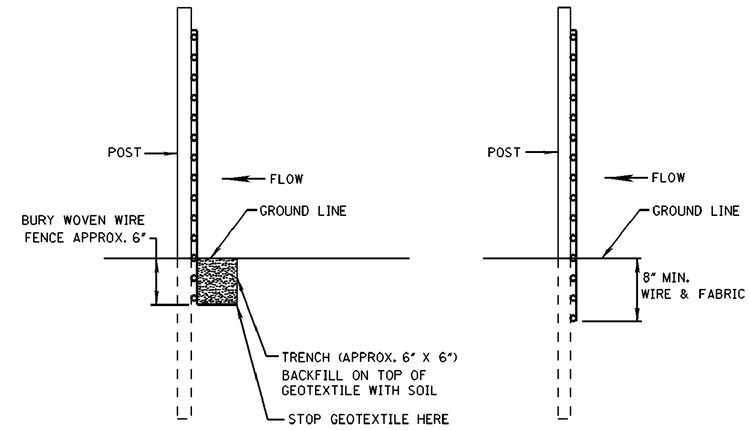

METHOD I

METHOD II
MECHANICAL INSTALLATION

SIDE VIEW

NOTES:
1. SILT FENCES SHALL BE USED IN AREAS WHERE FLOW IS NOT SEVERE.
2. SILT FENCES ARE TEMPORARY SEDIMENT CONTROL ITEMS THAT SHALL BE ERECTED OPPOSITE ERODIBLE AREAS SUCH AS NEWLY GRADED FILL SLOPES AND ADJACENT TO STREAMS AND CHANNELS.
3. SILT FENCE SHOULD BE PLACED WELL INSIDE RIGHT-OF-WAY AND ALONG EDGE OF CLEARING LIMITS. THIS WILL ALLOW ROOM FOR A BACK-UP FENCE IF FIRST FENCE BECOMES FULL.
4. WHEREVER POSSIBLE SILT FENCE SHALL BE CONSTRUCTED ACROSS A LEVEL AREA IN THE SHAPE OF A SMILE. THIS AIDS IN PONDING OF RUNOFF AND FACILITATES SEDIMENTATION.
5. THE CONTRACTOR MAY ELECT TO USE EITHER METHOD I OR METHOD II. COST TO BE LINEAR FEET OF SILT FENCE.
6. METHOD II INSTALLATION SHALL BE ACCOMPLISHED USING AN IMPLEMENT THAT IS MANUFACTUREED FOR THE APPLICATION AND PROVIDES A CONFIGURATION MEETING THE REQUIREMENTS OF THE DETAIL.
7. WIRE SHALL BE MINIMUM OF 32" IN WIDTH AND SHALL HAVE A MINIMUM OF 6 LINE WIRES WITH 12" STAY SPACING.
8. GEOTEXTILE FABRIC MEETING THE TYPE II MATERIAL REQUIREMENTS AND INSTALLED ACCORDING TO SPECIFICATION MAY BE USED WITHOUT WIRE FENCE,

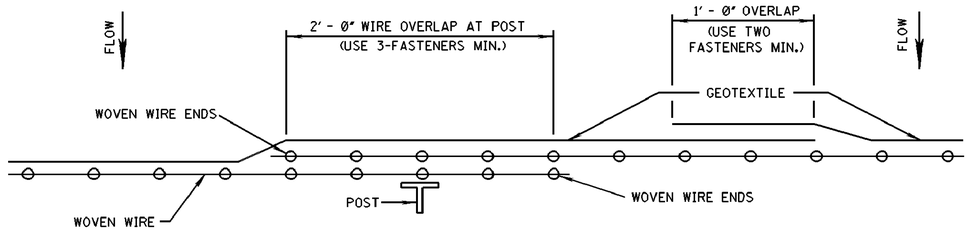

PLAN VIEW

REQUIRED LAPPING

REVISION	BY	DATE

MISSISSIPPI DEPARTMENT OF TRANSPORTATION

DETAILS OF SILT FENCE INSTALLATION

FILENAME: EROSION CONTROL\ECD-3.DGN

DESIGN TEAM _____ CHECKED _____ DATE _____

WORKING NUMBER ECD-3

SHEET NUMBER 13

DRAWING No.: 1270

PLAN
ROADWAY DESIGN DIVISION
MISSISSIPPI DEPARTMENT OF TRANSPORTATION

1/20/2010 8:09 AM ECD-3.DGN

STATE	PROJECT NO.
MISS.	

REFERENCE PROJECT NO	FISCAL YEAR	SHEET NO

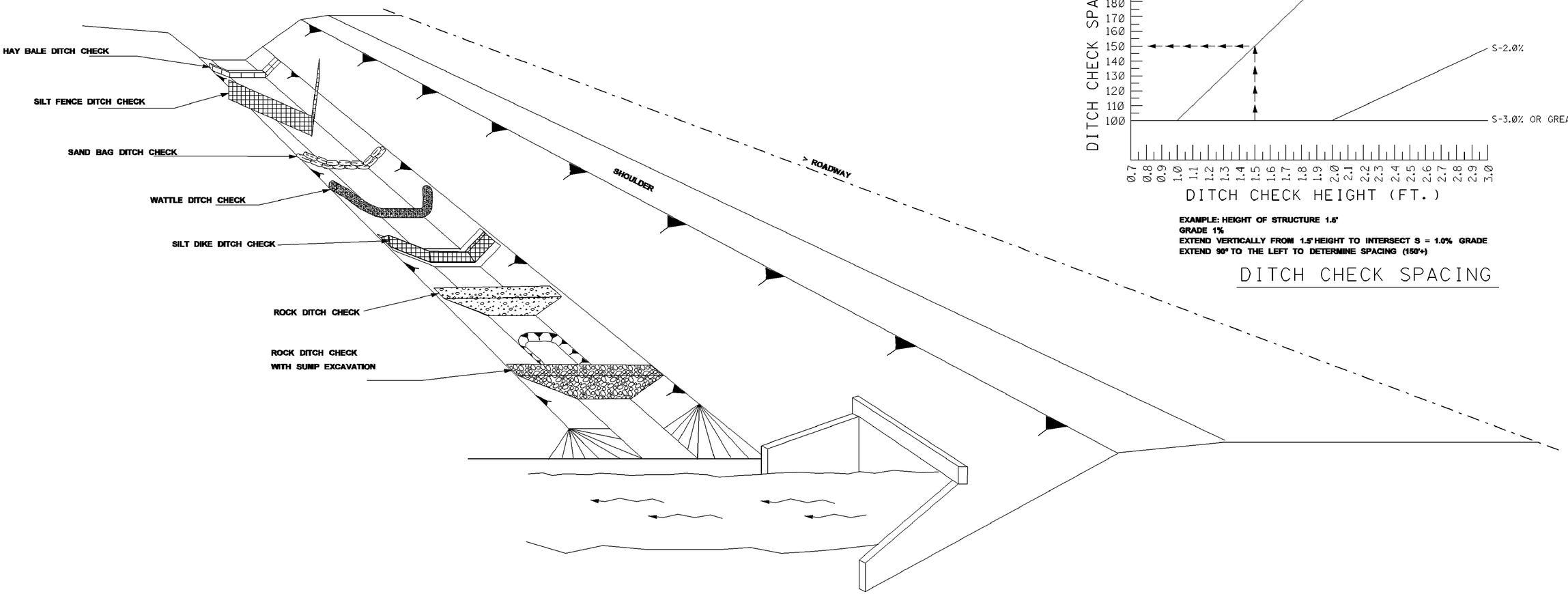

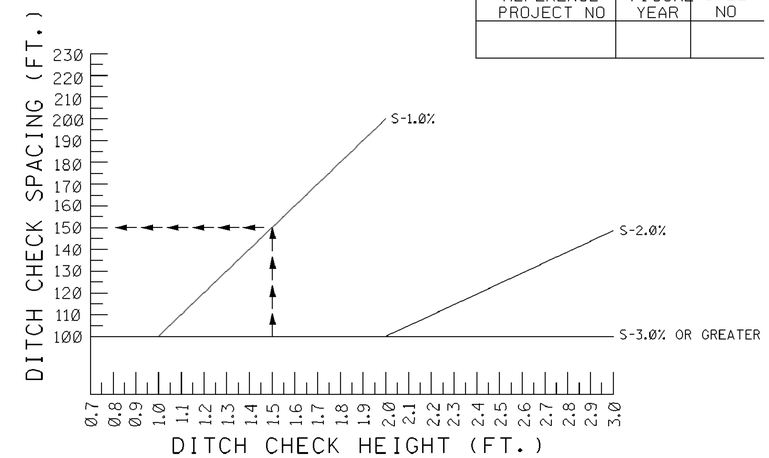

EXAMPLE: HEIGHT OF STRUCTURE 1.5'
GRADE 1%
EXTEND VERTICALLY FROM 1.5' HEIGHT TO INTERSECT S = 1.0% GRADE
EXTEND 90° TO THE LEFT TO DETERMINE SPACING (150'+)

DITCH CHECK SPACING

NOTES:

1. THE DITCH CHECK PERSPECTIVE ILLUSTRATES A TOOL BOX OF TEMPORARY PRACTICES THAT MAY BE USED. DITCH CHECKS ARE INSTALLED TO CONTROL RUNOFF VELOCITY AND THUS REDUCE EROSION AND PROVIDE FOR TRAPPING OF SEDIMENTS.
2. SELECTION OF THE APPROPRIATE DITCH CHECK SHOULD BE A FUNCTION OF CONSTRUCTION PHASE, DRAINAGE AREA, DITCH GRADIENT, SOIL TYPE ECONOMY AND SAFETY.
3. DITCH CHECKS CAN BE REMOVED FOR MAINTENANCE AND/OR REPLACEMENT BUT MUST REMAIN IN PLACE UNTIL UPSLOPE AREAS HAVE BEEN PERMANENTLY STABILIZED. MAINTENANCE INCLUDES REMOVAL OF SEDIMENT BEGINNING WHEN SEDIMENT ACCUMULATION REACHES 1/3 THE CAPACITY OR HEIGHT OF THE STRUCTURE AND NEVER ALLOWING FOR SEDIMENT TO ACCUMULATE MORE THAN 1/2 THE VOLUME OR HEIGHT OF THE DITCH CHECK STRUCTURE.
4. HAY BALES ARE USED TO INTERCEPT LOW VOLUME FLOWS IN LOW TO MODERATE GRADIENT DITCHES.
5. SILT FENCE DITCH CHECKS ARE USED WHERE IT HAS BEEN DETERMINED THAT HAY BALE CHECKS ARE INADEQUATE. SILT FENCE DITCH CHECKS ARE USED TO INTERCEPT LOW VOLUME FLOWS IN LOW TO MODERATE GRADIENT DITCHES.
6. SAND BAG DITCH CHECKS ARE USED FOR VELOCITY REDUCTION AND MINIMAL SEDIMENT TRAPPING IN CONCRETE PAVED DITCHES OR IN DITCHES THAT HAVE ROCKY BOTTOMS.
7. WATTLE DITCH CHECKS ARE APPROPRIATE FOR VELOCITY REDUCTION AND CONTROL OF SEDIMENT TRANSPORT UNDER LOW TO MEDIUM FLOW CONDITIONS.
8. SILT DIKES CAN BE USED IN DITCHES WITH CONCENTRATED FLOWS WITHIN THE CLEAR ZONE WHERE RIPRAP CAN NOT BE USED. AS CONSTRUCTION PROGRESSES.
9. ROCK DITCH CHECK WITH SUMP EXCAVATION CAN BE PLACED IN DITCHES TO ASSURE ON-SITE SEDIMENT TRAPPING REQUIREMENTS ARE MET. DITCH CHECK WITH SUMP EXCAVATION IS USED WHEN DITCHES RECEIVE DRAINAGE FROM CUT OR FILL SLOPES OR OTHER CRITICAL AREAS WHERE SOIL EROSION IS EXPECTED. DRAINAGE AREA FOR A TEMPORARY SEDIMENT TRAP SHALL NOT EXCEED 3 ACRES. THEY CAN BE USED IN SERIES TO INCREASE ON-SITE SEDIMENT TRAPPING EFFICIENCY.
10. IN GENERAL, DITCH CHECKS SHOULD NOT BE PLACED IN LIVE STREAMS.
11. CONFIGURATION AND SPACING MAY BE ADJUSTED IF APPROVED BY the ENGINEER TO ACCOMODATE TRAVELWAY SAFETY, WATER FLOW, OR SOIL AND INSTALLATION CHALLENGES.

REVISION	BY	DATE

MISSISSIPPI DEPARTMENT OF TRANSPORTATION

DITCH CHECK STRUCTURES, TYPICAL APPLICATIONS AND DETAILS

FILENAME: EROSION CONTROL\ECD-4.DGN
DESIGN TEAM _____ CHECKED _____ DATE _____

WORKING NUMBER: ECD-4
SHEET NUMBER: 14

DRAWING No.: 1270

PLAN
ROADWAY DESIGN DIVISION
MISSISSIPPI DEPARTMENT OF TRANSPORTATION
1/20/2010 8:10 AM ECD-4.DGN

STATE	PROJECT NO.
MISS.	

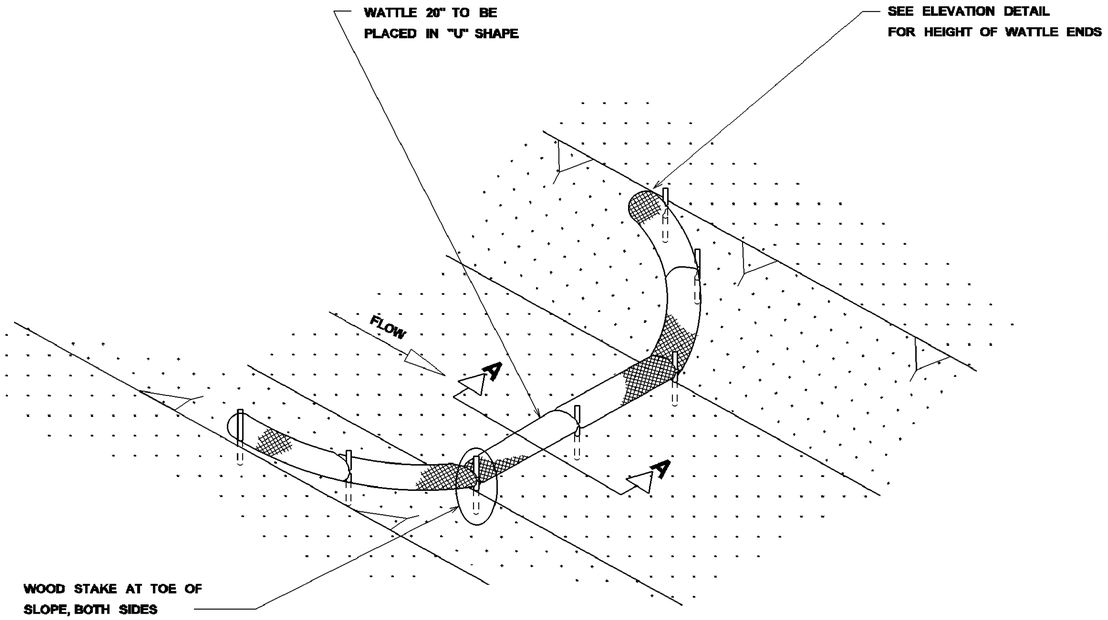

DETAIL (DITCH CHECK)

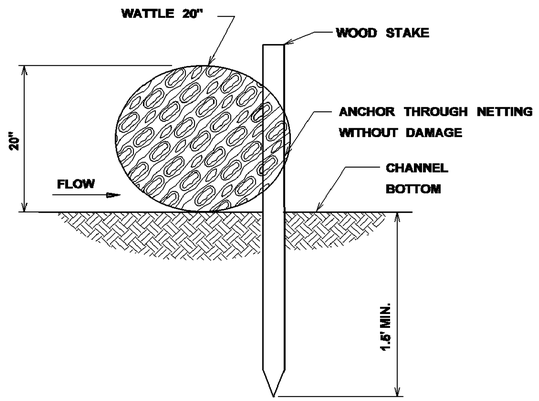

SECTION A-A

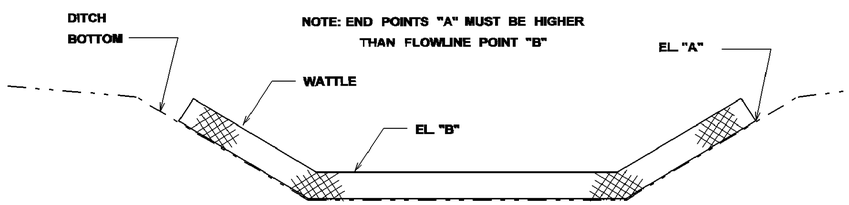

ELEVATION DETAIL

NOTES:

1. MINIMUM RECOMMENDED PLACEMENT INTERVAL BETWEEN WATTLE DITCH CHECK IS 100' UNLESS SHOWN OTHERWISE ON THE PLANS OR EROSION CONTROL PLAN APPROVED BY THE ENGINEER. SEE SPACING GUIDANCE ON ECD-4
2. ANCHORING WOOD STAKES SHALL BE SIZED, SPACED, DRIVEN, AND BE OF A MATERIAL THAT EFFECTIVELY SECURES THE CHECK. STAKE SPACING SHALL BE A MAXIMUM OF THREE FEET. ALL NON-DEGRADABLE MATERIALS SHALL BE REMOVED WHEN NO LONGER NEEDED.
3. TRENCHING OF WATTLES MAY BE NECESSARY IF PIPING BECOMES EVIDENT.
4. WATTLES SHOULD NOT BE USED IN HARD BOTTOM CHANNELS.

WATTLE DITCH CHECK SELECTION GUIDELINES

WATTLE DITCH CHECKS ARE APPROPRIATE FOR VELOCITY REDUCTION AND CONTROL OF SEDIMENT TRANSPORT UNDER LOW TO MEDIUM FLOW CONDITIONS.

DATE	REVISION	BY

MISSISSIPPI DEPARTMENT OF TRANSPORTATION

DETAILS OF EROSION CONTROL
WATTLE DITCH CHECK

WORKING NUMBER
ECD-6

FILENAME: EROSION CONTROL\ECD-6.DGN

DESIGN TEAM _____ CHECKED _____ DATE _____

SHEET NUMBER
15

DRAWING No.: 1270

PLAN
ROADWAY DESIGN DIVISION
MISSISSIPPI DEPARTMENT OF TRANSPORTATION

1/19/2010 12:21 PM ECD-6.DGN

STATE	PROJECT NO.
MISS.	

NOTE:
SILT FENCE OR SAND BAGS MAY ALSO BE USED FOR THIS APPLICATION.
HAY BALES NOT ACCEPTABLE DURING THIS STAGE.

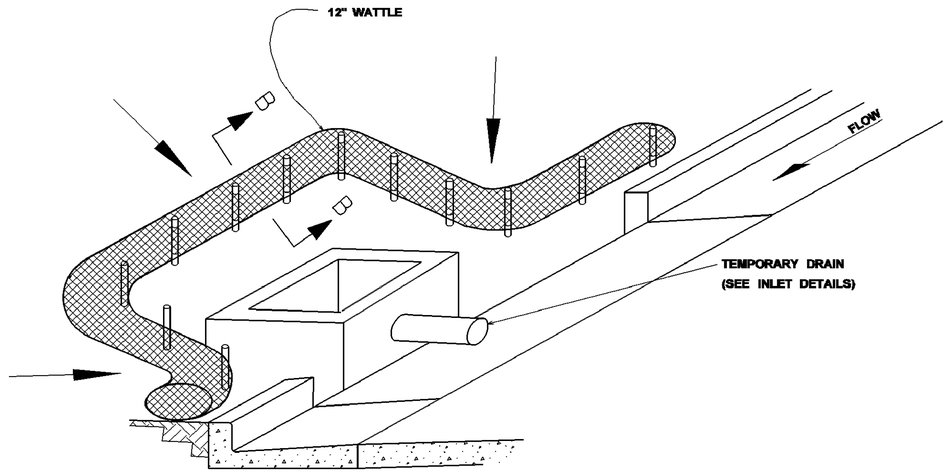

CURB INLET PROTECTION (STAGE 2)
SINGLE OR DOUBLE WING INLET

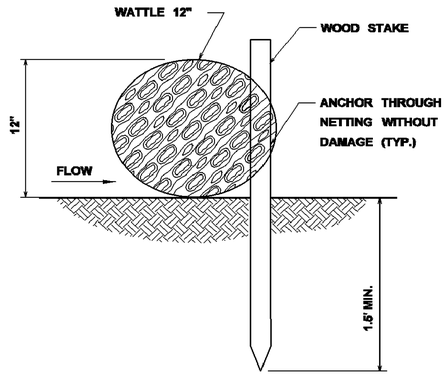

SECTION B-B

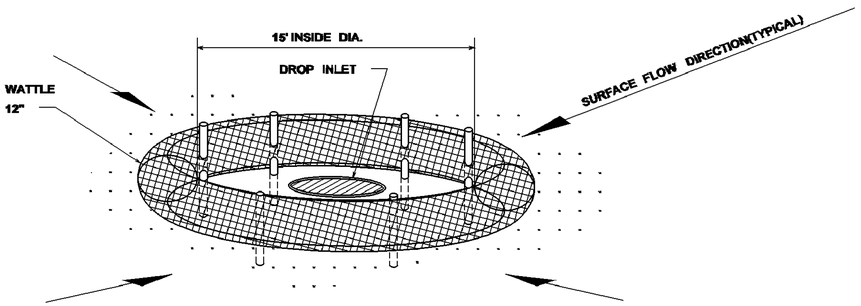

DROP INLET PROTECTION

NOTES:

1. ANCHORING STAKES SHALL BE SIZED, SPACED, AND BE OF A MATERIAL THAT EFFECTIVELY SECURES THE WATTLE. STAKE SPACING SHALL BE A MAXIMUM OF THREE FEET.
2. OVERLAP ENDS OF WATTLES PER MANUFACTURERS RECOMMENDATIONS (1'MIN.,3'MAX.).
3. TRENCHING OF WATTLES MAY BE NECESSARY IF PIPING BECOMES EVIDENT.

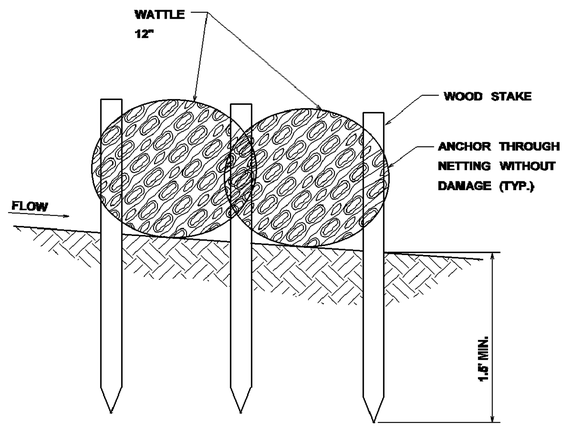

SECTION A-A

REVISION	BY	DATE

MISSISSIPPI DEPARTMENT OF TRANSPORTATION

INLET PROTECTION DETAILS
OF WATTLES

WORKING NUMBER
ECD-12

SHEET NUMBER
16

FILENAME: EROSION CONTROL\ECD-12.DGN
DESIGN TEAM _____ CHECKED _____ DATE _____

DRAWING No.: 1270

PLAN
ROADWAY DESIGN DIVISION
MISSISSIPPI DEPARTMENT OF TRANSPORTATION

1/19/2018 12:26PM ECD-12.DGN

STATE	PROJECT NO.
MISS.	

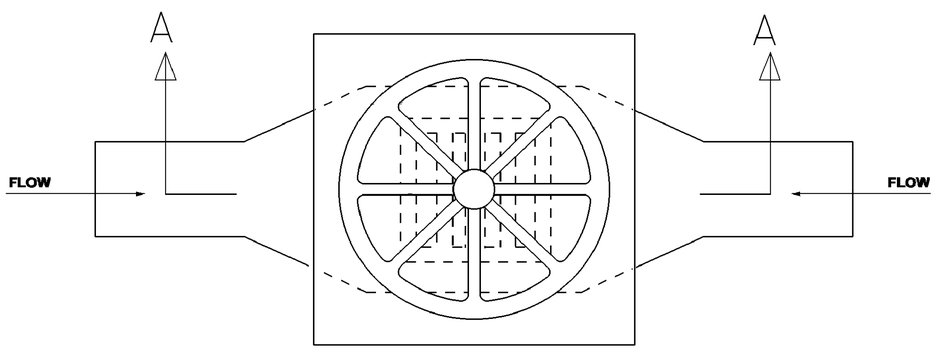

PLAN

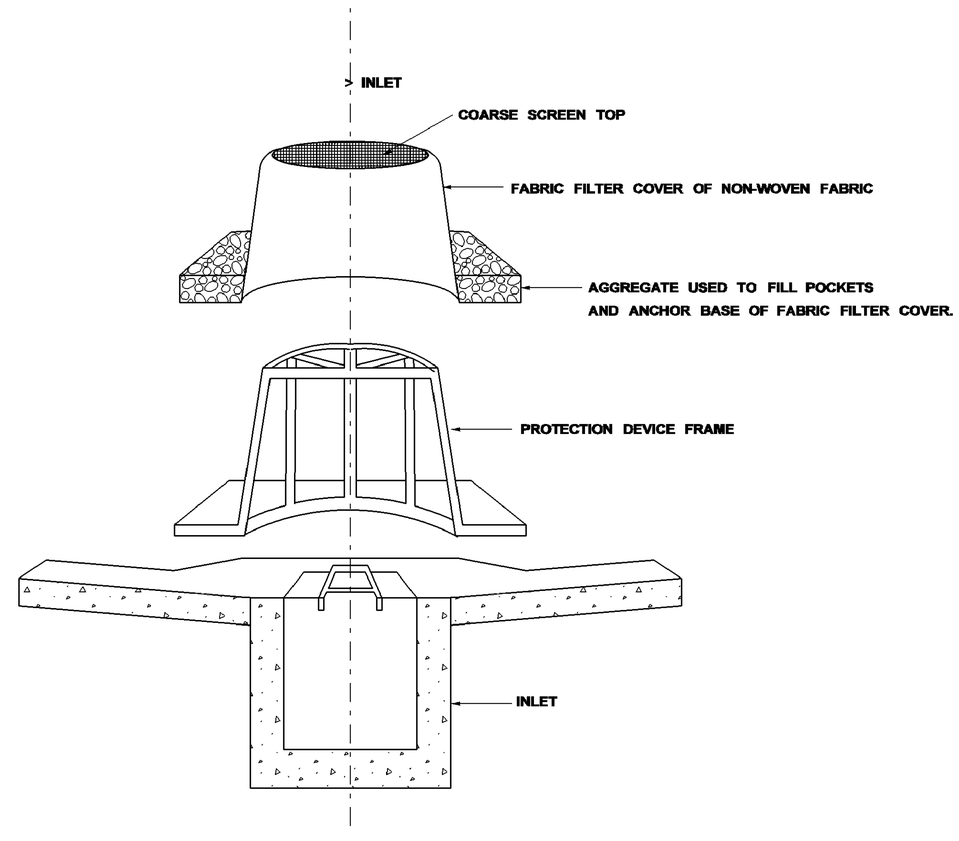

SECTION "A-A"

NOTES:

1. FRAMES WITH EITHER SQUARE OR CIRCULAR BASES MAY BE USED. SELECTED FRAME BASE SHOULD PROVIDE BEST SEAL AROUND INLET AS DIRECTED BY THE ENGINEER.
2. FILL POCKETS AROUND BASE OF FILTER COVER WITH #57 STONE OR SOIL. STONE IS REQUIRED WHEN ANCHORING THE MANUFACTURED INLET PROTECTION DEVICE OVER PAVED DITCH OR FLUME.
3. USE ONLY DURING STAGE 3 OR STAGE 4 INLET CONSTRUCTION.
4. FOR MEDIAN INLET PROTECTION, THE ELEVATION OF THE COARSE SCREEN TOP SHOULD BE A MINIMUM OF 6" BELOW THE ELEVATION OF THE OUTSIDE EDGE OF THE INSIDE SHOULDER.

REVISION	BY	MISSISSIPPI DEPARTMENT OF TRANSPORTATION
		INLET PROTECTION DETAILS OF MANUFACTURED INLET PROTECTION DEVICE
DATE		FILENAME: EROSION CONTROL\ECD-13.DGN
		DESIGN TEAM ____ CHECKED ____ DATE ____

WORKING NUMBER ECD-13

SHEET NUMBER 17

DRAWING No.: 1270

PLAN: ROADWAY DESIGN DIVISION MISSISSIPPI DEPARTMENT OF TRANSPORTATION
1/20/2010 9:32 AM ECD-13.DGN

STATE	PROJECT NO.
MISS.	

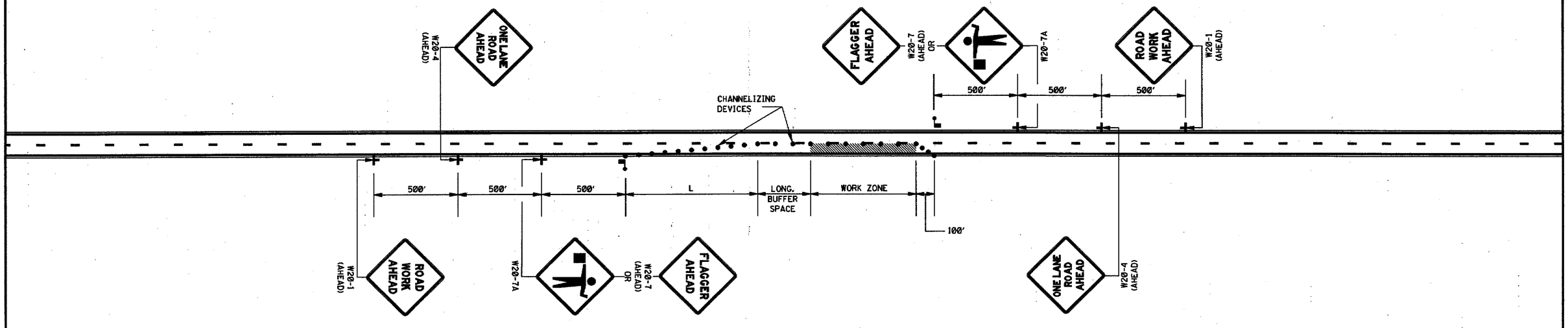

LEGEND

FLAGGER

● CHANNELIZING DEVICES

GENERAL NOTES:

1. THE LOCATION OF CHANNELIZING DEVICES AND THE WORK AREA LAYOUT SHALL BE BASED ON THE CRITERIA IN THE FOLLOWING TABLE:

POSTED SPEED AND/OR DESIGN SPEED	MAXIMUM CHANNELIZING DEVICE SPACING (ft)		MINIMUM LONGITUDINAL BUFFER SPACE (ft)	TAPER † RATES
	TAPER	ALONG LANE LINE & WORK ZONE		
mph				
≤40	40	80	170	27:1
45	45	90	220	45:1
50	50	100	280	50:1
55	55	110	335	55:1
60	60	120	415	60:1
65	65	130	485	65:1
70	70	140	575	70:1

† NOTE: TAPER RATES ARE DETERMINED USING THE FOLLOWING EQUATIONS:
$L = WS$ FOR SPEEDS OF 45 mph OR GREATER
$L = WS^2/60$ FOR SPEEDS OF 40 mph OR LESS
WHERE: L = MINIMUM LENGTH OF TAPER IN FEET
W = WIDTH OF OFFSET (USUALLY LANE WIDTH) IN FEET
S = DESIGN SPEED OR 85TH PERCENTILE SPEED IN MILES PER HOUR

2. ALL CHANNELIZING DEVICES SHALL BE A MINIMUM OF 24" IN HEIGHT.

3. ALL TRAFFIC CONTROL ITEMS SHOWN ON THIS SHEET WILL NOT BE MEASURED FOR SEPARATE PAYMENT. THIS WORK IS TO BE INCLUDED IN THE PRICE BID FOR MAINTENANCE OF TRAFFIC.

4. DIAMOND SHAPED TRAFFIC CONTROL SIGNS SHALL BE A MINIMUM OF 48" x 48".

5. WHEN THERE IS NO EXISTING HAZARD OR AT THE END OF THE WORK DAY, ALL SIGNS SHALL BE COVERED OR REMOVED AND ALL CHANNELIZING DEVICES SHALL BE MOVED TO THE SHOULDER EDGE.

6. WHERE THE WORK ZONE IS STATIONARY, THE W20-7 (500 FT.) SIGN OR THE W20-7A SIGN TOGETHER WITH THE W20-7 (500 FT.) SUPPLEMENTAL PLATE SHOULD BE USED TO INDICATE THE DISTANCE TO THE FLAGGER.

DATE	REVISION	BY

MISSISSIPPI DEPARTMENT OF TRANSPORTATION
ROADWAY DESIGN DIVISION
STANDARD PLAN

TRAFFIC CONTROL PLAN WITH FLAGGER
(ONE-LANE CLOSURE OF TWO-WAY TRAFFIC)

ENGLISH

WORKING NUMBER TCP-1

ISSUE DATE: OCTOBER 1, 1998

SHEET NUMBER 250

DRAWING No.: 1270

G:\PROJECTS\Hattiesburg_City of\1270 - Veterans Blvd Water Connection\1270dwg\1270_wmdc.dwg, 250, 10/24/2012 9:24:10 AM

STATE	PROJECT NO.
MISS.	

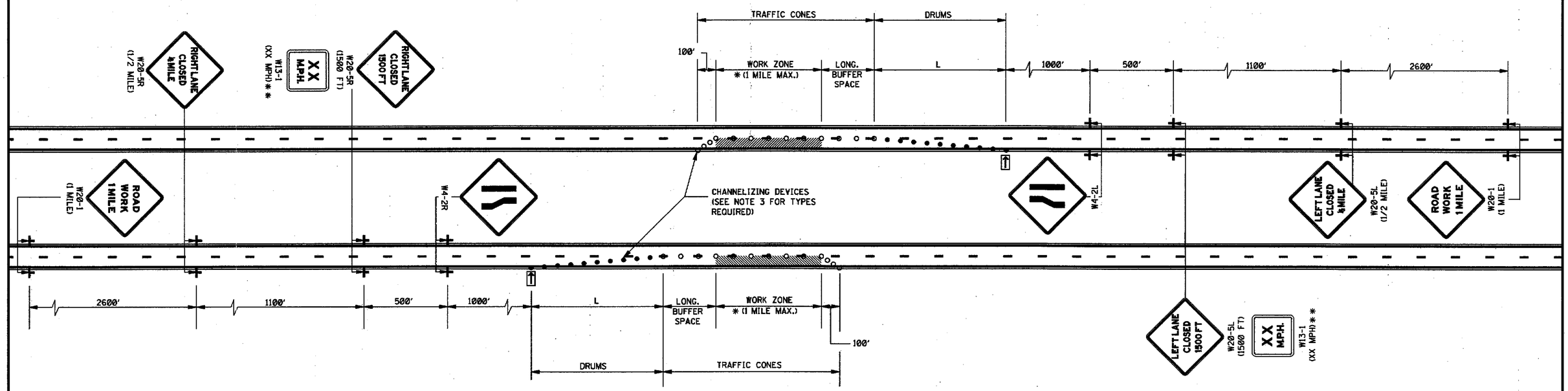

GENERAL NOTES:

1. THE LOCATION OF CHANNELIZING DEVICES AND THE WORK AREA LAYOUT SHALL BE BASED ON THE CRITERIA IN THE FOLLOWING TABLE:

POSTED SPEED AND/OR DESIGN SPEED	MAXIMUM CHANNELIZING DEVICE SPACING (ft)		MINIMUM LONGITUDINAL BUFFER SPACE (ft)	TAPER † RATES
	TAPER	ALONG LANE LINE & WORK ZONE		
mph				
≤40	40	80	170	27:1
45	45	90	220	45:1
50	50	100	280	50:1
55	55	110	335	55:1
60	60	120	415	60:1
65	65	130	485	65:1
70	70	140	575	70:1

† NOTE: TAPER RATES ARE DETERMINED USING THE FOLLOWING EQUATIONS:
$L = WS$ FOR SPEEDS OF 45 mph OR GREATER
$L = WS^2/60$ FOR SPEEDS OF 40 mph OR LESS
WHERE: L = MINIMUM LENGTH OF TAPER IN FEET
W = WIDTH OF OFFSET (USUALLY LANE WIDTH) IN FEET
S = DESIGN SPEED OR 85TH PERCENTILE SPEED IN MILES PER HOUR

2. FLASHING ARROW PANEL SHALL BE AS LEVEL AS POSSIBLE AS APPROVED BY THE ENGINEER. FLASHING ARROW PANEL SHOULD BE LOCATED AT THE BEGINNING OF THE TAPER OR, IF THE SHOULDER IS TOO NARROW, BEHIND THE CHANNELIZING DEVICES IN THE CLOSED LANE.

3. CHANNELIZING DEVICE TYPES FOR:
   A. APPROACH TAPER- REFLECTORIZED PLASTIC DRUMS
   B. ALONG LANE LINE AND WORK ZONE- TRAFFIC CONES (28" HEIGHT)
   C. EXIT TAPER- TRAFFIC CONES (28" HEIGHT)

4. WHEN THERE IS NO EXISTING HAZARD, ALL SIGNS SHALL BE COVERED OR REMOVED AND THE DRUMS SHALL BE MOVED TO THE SHOULDER EDGE AT THE END OF THE WORK DAY.

5. FOR MOVING OPERATIONS (PAVING) THE CONTRACTOR SHALL HAVE TWO (2) SETS OF ADVANCE WARNING SIGNS, PLASTIC DRUMS, AND ARROW BOARD. WHEN THE CONSTRUCTION ZONE IS MOVED AHEAD, ALL SIGNS, PLASTIC DRUMS AND ARROW BOARD SHALL BE IN PLACE ON THE SECOND ZONE BEFORE REMOVING ANY SIGNS, PLASTIC DRUMS OR ARROW BOARD ON THE FIRST ZONE.

6. ALL TRAFFIC CONTROL ITEMS SHOWN ON THIS SHEET WILL NOT BE MEASURED FOR SEPARATE PAYMENT. THIS WORK IS TO BE INCLUDED IN THE PRICE BID FOR MAINTENANCE OF TRAFFIC.

7. DIAMOND SHAPED TRAFFIC CONTROL SIGNS SHALL BE A MINIMUM OF 48" X 48".

LEGEND

* OR AS SHOWN ELSEWHERE OF THE PLANS.

** THE LEGEND ON W13-1 (XX MPH) SUPPLEMENTAL PLATE SHALL BE 10 MPH LESS THAN THE POSTED SPEED LIMIT.

FLASHING ARROW PANEL (TYPE "C")

● REFLECTORIZED FREE-STANDING PLASTIC DRUMS

○ TRAFFIC CONES (28" HEIGHT)

DATE	REVISION	BY

MISSISSIPPI DEPARTMENT OF TRANSPORTATION
ROADWAY DESIGN DIVISION
STANDARD PLAN

TRAFFIC CONTROL PLAN FOR POSTED SPEED LIMIT LESS THAN 65 MPH
(4-LANE: MEDIAN LANE OR OUTSIDE LANE CLOSURE)
(WORK DAY ONLY)

ENGLISH

WORKING NUMBER TCP-2

ISSUE DATE: OCTOBER 1, 1998

SHEET NUMBER 251

DRAWING No.: 1270

G:\PROJECTS\Hattiesburg_City of\1270 - Veterans Blvd Water Connection\1270dwg\1270_wpdk.dwg, 25:, 10/24/2012 9:24:15 AM

City of Hattiesburg, MS

200 Forrest St.
P.O. Box 1898
Hattiesburg, MS 39401

Master

File Number: 2012-1297

File ID:	2012-1297	**Type:**	Regular Agenda Item	**Status:**	Agenda Ready
Version:	1	**Reference:**		**In Control:**	City Council
				File Created:	10/30/2012
Brief Title:	Approve Specifications and Authorize Publication of Advertisement for Twelve (12) Month Lease on a Current Model 2012 Wheel Loader Backhoe			**Final Action:**	
				Minute Book Number:	MB2012-1/387

Title:

Approve Specifications and Authorize Publication of Advertisement for Twelve (12) Month Lease on a Current Model 2012 Wheel Loader Backhoe

Notes:

Sponsors:		**Enactment Date:**	
Attachments:	11-06-Advertise Backhoe Lease.pdf, executed 11-06-Advertise Backhoe Lease, 12 Month Lease 2012 Wheel Loader Bid	**Enactment Number:**	
Contact:		**Meeting Date:**	11/06/2012
Drafter:		**Effective Date:**	

History of Legislative File

Version:	Acting Body:	Date:	Action:	Sent To:	Due Date:	Return Date:	Result:
1	City Council	11/06/2012					

Text of Legislative File 2012-1297

Title

Approve Specifications and Authorize Publication of Advertisement for Twelve (12) Month Lease on a Current Model 2012 Wheel Loader Backhoe

Summary

Approve Specifications and Authorize Publication of Advertisement for Twelve (12) Month Lease on a Current Model 2012 Wheel Loader Backhoe

Purchasing Item

Sealed Bid

NOTICE TO BIDDERS

NOTICE is hereby given that the Mayor and Council of the City of Hattiesburg, Mississippi will receive sealed bids until 10:00 A.M., Thursday, December 6, 2012, in the City Clerk's Office in the City Hall of said City for furnishing the City's requirements of the following items for the Public Works Department, to-wit:

12 MONTH LEASE ON A NEW CURRENT MODEL 2012 WHEEL LOADER BACKHOE

The above shall bid upon and delivered as per detailed specifications on file in the Office of the City Clerk, P. O. Box 1898, 200 Forrest Street, Hattiesburg, Mississippi, 39403-1898, (601) 545-4552, which may be obtained upon request.

Each BID must be received in a sealed envelope which is marked in the lower left-hand corner with the word "BID" and the NAME OF ITEM on which bid is being made and the DATE OF BID OPENING.

The lowest and best bid received will be accepted, subject to the provisions of Section 31-7-13 of the Mississippi Code of 1972, Annotated as Amended, and other applicable State law; but the Council reserves the right to reject any or all bids received and to waive informalities.

PUBLISHED by Order of the Council on this, the 6th day of November, 2012.

CITY OF HATTIESBURG, MISSISSIPPI

BY: _____
CITY CLERK

(S E A L)

SPECIFICATIONS FOR: 12 MONTH LEASE ON A NEW CURRENT MODEL 2012 WHEEL LOADER BACKHOE

Bidder shall bid on furnishing the above item(s) which meet(s)or exceed(s) the following specifications, to-wit:

SEE ATTACHED DETAILED SPECIFICATIONS

DELIVERY: F.O.B. Hattiesburg, Mississippi, freight prepaid.

PAYMENT TERMS: Remittance within thirty (30) days from satisfactory delivery of goods and/or receipt of invoice(s).

SEALED bids will be received until 10:00 A.M., Thursday, December 6, 2012, in the City Clerk's Office in the City Hall, P.O. Box 1898, 200 Forrest Street, Hattiesburg, Mississippi, 39403-1898, (601) 545-4552, for furnishing the above described item(s). It shall be the responsibility of all bidders to have their bids delivered to the location listed in these specifications and/or Notice to Bidders on or before the date and time specified. The City of Hattiesburg shall not be responsible for any bid sent via U. S. Mail or any other mail courier service which is delivered or received after the date and time listed in said specifications and/or Notice to Bidders. State Law prohibits the consideration of bids received after the date and time advertised for receipt of Sealed bids.

Each BID must be received in a sealed envelope which is clearly marked in the lower left-hand corner **EXACTLY** as follows:

BID
12 MONTH LEASE ON A NEW CURRENT MODEL 2012 WHEEL LOADER BACKHOE
SUBMITTED BY 10:00 A.M. DECEMBER 6, 2012

The lowest and best bid received will be accepted, subject to the provisions of Section 31-7-13 of the Mississippi Code of 1972, Annotated as Amended, and other applicable State law; but the Council reserves the right to reject any and all bids received and to waive informalities.

APPROVED on this, the 6th day of November A. D., 2012.

CITY OF HATTIESBURG, MISSISSIPPI

BY:_____
CITY CLERK

SPECIFICATIONS APPROVED BY:

_____
PUBLIC WORKS DEPARTMENT

SPECIFICATIONS FOR 12 MONTH LEASE ON A NEW CURRENT MODEL 2012 WHEEL LOADER BACKHOE

The unit shall be equipped with the following:

Tier 4 interim diesel engine meeting U S EPA stage IIIB emission standards of 97 net peak power at @1800 RPM EEC 80/1269 & ISO9249, long life diesel particulate filter, suction fan and guard, one touch low idle

All wheel drive

Power shuttle transmission, reversing in all gears with forward and reverse speeds, differential lock

Cab with air conditioning and heat

Extendable backhoe stick, SAE max 17'11" extended, digging depth, joystick controls with pattern changer, swing transport lock, boom transport lock, thumb ready

24" heavy duty digging bucket and 48" ditching bucket

1.4 cubic yard general purpose loader bucket, with auxiliary loader hydraulics plumbed to the machine front

43 gallon per minute hydraulics, variable flow-axial piston closed center system

Work lights, 4 front, 4 rear and flashing hazard/signal lights, stop and tail lights

Complete service for 12 months as recommended by the manufacturer other than daily

Operating weight minimum 15,000 Lbs

All other standard equipment and options as listed

Expected delivery date and expiration date

Extended cost

NOTICE TO BIDDERS

NOTICE is hereby given that the Mayor and Council of the City of Hattiesburg, Mississippi will receive sealed bids until 10:00 A.M., Thursday, December 6, 2012, in the City Clerk's Office in the City Hall of said City for furnishing the City's requirements of the following items for the Public Works Department, to-wit:

12 MONTH LEASE ON A NEW CURRENT MODEL 2012 WHEEL LOADER BACKHOE

The above shall bid upon and delivered as per detailed specifications on file in the Office of the City Clerk, P. O. Box 1898, 200 Forrest Street, Hattiesburg, Mississippi, 39403-1898, (601) 545-4552, which may be obtained upon request.

Each BID must be received in a sealed envelope which is marked in the lower left-hand corner with the word "BID" and the NAME OF ITEM on which bid is being made and the DATE OF BID OPENING.

The lowest and best bid received will be accepted, subject to the provisions of Section 31-7-13 of the Mississippi Code of 1972, Annotated as Amended, and other applicable State law; but the Council reserves the right to reject any or all bids received and to waive informalities.

PUBLISHED by Order of the Council on this, the 6th day of November, 2012.

CITY OF HATTIESBURG, MISSISSIPPI

BY: Tiffani R. Myers
CITY CLERK

(SEAL)

SPECIFICATIONS FOR: 12 MONTH LEASE ON A NEW CURRENT MODEL 2012 WHEEL LOADER BACKHOE

Bidder shall bid on furnishing the above item(s) which meet(s)or exceed(s) the following specifications, to-wit:

SEE ATTACHED DETAILED SPECIFICATIONS

DELIVERY: F.O.B. Hattiesburg, Mississippi, freight prepaid.

PAYMENT TERMS: Remittance within thirty (30) days from satisfactory delivery of goods and/or receipt of invoice(s).

SEALED bids will be received until 10:00 A.M., Thursday, December 6, 2012, in the City Clerk's Office in the City Hall, P.O. Box 1898, 200 Forrest Street, Hattiesburg, Mississippi, 39403-1898, (601) 545-4552, for furnishing the above described item(s). It shall be the responsibility of all bidders to have their bids delivered to the location listed in these specifications and/or Notice to Bidders on or before the date and time specified. The City of Hattiesburg shall not be responsible for any bid sent via U. S. Mail or any other mail courier service which is delivered or received after the date and time listed in said specifications and/or Notice to Bidders. State Law prohibits the consideration of bids received after the date and time advertised for receipt of Sealed bids.

Each BID must be received in a sealed envelope which is clearly marked in the lower left-hand corner **EXACTLY** as follows:

BID
12 MONTH LEASE ON A NEW CURRENT MODEL 2012 WHEEL LOADER BACKHOE
SUBMITTED BY 10:00 A.M. DECEMBER 6, 2012

The lowest and best bid received will be accepted, subject to the provisions of Section 31-7-13 of the Mississippi Code of 1972, Annotated as Amended, and other applicable State law; but the Council reserves the right to reject any and all bids received and to waive informalities.

APPROVED on this, the 6th day of November A. D., 2012.

CITY OF HATTIESBURG, MISSISSIPPI

BY:_____
CITY CLERK

SPECIFICATIONS APPROVED BY:

_____
PUBLIC WORKS DEPARTMENT

SPECIFICATIONS FOR 12 MONTH LEASE ON A NEW CURRENT MODEL 2012 WHEEL LOADER BACKHOE

The unit shall be equipped with the following:

Tier 4 interim diesel engine meeting U S EPA stage IIIB emission standards of 97 net peak power at @1800 RPM EEC 80/1269 & ISO9249, long life diesel particulate filter, suction fan and guard, one touch low idle

All wheel drive

Power shuttle transmission, reversing in all gears with forward and reverse speeds, differential lock

Cab with air conditioning and heat

Extendable backhoe stick, SAE max 17'11" extended, digging depth, joystick controls with pattern changer, swing transport lock, boom transport lock, thumb ready

24" heavy duty digging bucket and 48" ditching bucket

1.4 cubic yard general purpose loader bucket, with auxiliary loader hydraulics plumbed to the machine front

43 gallon per minute hydraulics, variable flow-axial piston closed center system

Work lights, 4 front, 4 rear and flashing hazard/signal lights, stop and tail lights

Complete service for 12 months as recommended by the manufacturer other than daily

Operating weight minimum 15,000 Lbs

All other standard equipment and options as listed

Expected delivery date and expiration date

Extended cost

City of Hattiesburg, MS

200 Forrest St.
P.O. Box 1898
Hattiesburg, MS 39401

Master

File Number: 2012-1313

File ID:	2012-1313	**Type:**	Regular Agenda Item	**Status:**	Agenda Ready
Version:	1	**Reference:**		**In Control:**	City Council
				File Created:	10/30/2012
Brief Title:	CDBG Manual Checks			**Final Action:**	
				Minute Book Number:	MB2012-1/387

Title:

Approve and authorize issuance of manual checks for CDBG Program Claims per attached memorandum.{Entitlement}

Notes:

Sponsors:		**Enactment Date:**	
Attachments:	MEMORANDUM-Manual Checks-CDBG, CDBG Supporting Docs	**Enactment Number:**	
Contact:		**Meeting Date:**	11/06/2012
Drafter:		**Effective Date:**	

History of Legislative File

Version:	Acting Body:	Date:	Action:	Sent To:	Due Date:	Return Date:	Result:
1	City Council	11/06/2012					

Text of Legislative File 2012-1313

Title

Approve and authorize issuance of manual checks for CDBG Program Claims per attached memorandum.{Entitlement}

Summary

CDBG Manual Checks

Budget Information

Expenditure Type

Purchasing Item

Publication Information

MEMORANDUM

TO: City of Hattiesburg Council Members

FROM: Franklyn L. Tate, Director
Department of Federal & State Programs

SUBJECT: Authorize issuance of manual checks for CDBG Program claims

DATE: October 30, 2012

The following request for payment is being submitted for approval during the City Council's November 6, 2012 meeting. Please authorize and approve issuance of a manual check for the claims listed below:

Recipient:	**Pinebelt Community Services**
Activity:	Public Services – Meals Program
Program:	CDBG
Project Site:	1101 North Main St.
Food	$515.72 and $949.76
Amount Requested:	**$1,465.48**
Purpose of Request:	Draw #6 and Draw #7
Work Provided by:	Pinebelt Community Services

Recipient:	**Pinebelt Community Services**
Activity:	Public Services – Jobs Program
Program:	CDBG
Project Site:	1101 North Main St.
Materials	$977.62
Amount Requested:	**$977.62**
Purpose of Request:	Draw #2
Work Provided by:	Pinebelt Community Services

Recipient:	**Eve's House, Inc.**
Activity:	Public Service
Program:	CDBG
Project Site:	841 North Main St.
Supplies & Printing	$42.79 & $47.05
Tutors/Teachers	$500.00 & $260.00
Life Skills Management	$299.60 & $481.81
Amount Requested:	**$1,631.25**
Purpose of Request:	Draw #5 & Draw #6
Work Provided by:	Eve's House, Inc.

Recipient:	**Bonner Analytical**
Activity:	Affordable Housing
Program:	CDBG – Supporting HOME
Project Site:	127 E 5th St.
Amount Requested:	**$97.65**
Purpose of Request:	Lead Clearance Test
Work Provided by:	Bonner Analytical

Recipient:	**B & F Distributors, LLC**
Activity:	Microenterprise Assistance
Program:	CDBG
Project Site:	103 Broadway Dr.
Amount Requested:	**$2,158.22**
Purpose of Request:	Draw #5
Work Provided by:	B & F Distributors, LLC

REQUEST FOR FUNDS

(1) Organization's Name & Address: PINEBELT Community Services – Meals Program Telephone Number: 601-583-4943	Project Address: 1101 North Main Street Hattiesburg, MS 39401	Request No.6 Worked Performed: Food Purchases, Gas Cards (5) Amount Requested: $ 515.72
(6) Project Period From: May 15, 20112 To: December 31, 2012	(7) Check Made Payable to: PINEBELT Community Services – Meals Program	Prepared By: Lucille Bass Date Prepared October 22, 2012

Lucille Bass
Signature of Authorized Officer Requesting Funds

October 22, 2012
Date

Mrs. Lucille Bass, Program Director
Type Name and Title of Authorized Office

Signature of City Official Approving Disbursement

10/29/12
Date

Type Name and Title of City Official

"I HEREBY CERTIFY THAT the costs included in this request are for services rendered and allowable costs/expenditures in accordance with approved contract agreement between the City of Hattiesburg and the certifying agency and that the amounts requested do not exceed the total funds obligated by the contract".

Revised 10/04

10-22-12P04:50 RCVD

REQUEST FOR FUNDS SUPPORT SHEET

Recipient's Name: PINEBELT Community Services Meals Program
Contract Date: 05/15/2012

Request Number #6 Total Amount Requested ** $ 515.72

Funds requested are for Meals Program Costs and Expenses

1 Food	$ 515.72
2) Gas Cards	$
3)	$
4)	$
5)	$
6)	$
7)	$
Total of Attached Documentation	$ 515.72
Less Amount in Excess of Contract Award	$
** Total Amount Requested for this Draw	$ 515.72
TOTAL REQUESTED TO DATE	$ 5,835.34

Period of Project(s) Start to Completion From: May 15 2012 to December 31, 2012

Other: _____

REQUEST FOR FUNDS

(1) Organization's Name & Address: PINEBELT Community Services – Meals Program Telephone Number: 601-583-4943	Project Address: 1101 North Main Street Hattiesburg, MS 39401	Request No.7 Worked Performed: Food Purchases, Gas Cards (5) Amount Requested: $ ~~954.76~~ 949.76 AE
(6) Project Period From: May 15, 20112 To: December 31, 2012	(7) Check Made Payable to: PINEBELT Community Services – Meals Program	Prepared By: Lucille Bass Date Prepared October 29, 2012

Lucille Bass
Signature of Authorized Officer Requesting Funds

October 29, 2012
Date

Mrs. Lucille Bass, Program Director
Type Name and Title of Authorized Office

Signature of City Official Approving Disbursement

10/29/12
Date

Type Name and Title of City Official

"I HEREBY CERTIFY THAT the costs included in this request are for services rendered and allowable costs/expenditures in accordance with approved contract agreement between the City of Hattiesburg and the certifying agency and that the amounts requested do not exceed the total funds obligated by the contract".

Revised 10/04

REQUEST FOR FUNDS SUPPORT SHEET

Recipient's Name: PINEBELT Community Services Meals Program
Contract Date: 05/15/2012

Request Number #7 Total Amount Requested ** $ ~~954.76~~ 949.76

Funds requested are for Meals Program Costs and Expenses

1 Food	$ ~~954.76~~ 949.76
2) Gas Cards	$
3)	$
4)	$
5)	$
6)	$
7)	$
Total of Attached Documentation	$ ~~954.76~~ 949.76
Less Amount in Excess of Contract Award	$
** Total Amount Requested for this Draw	$ ~~954.76~~ 949.76
TOTAL REQUESTED TO DATE	$ ~~6790.30~~

Period of Project(s) Start to Completion From: May 15 2012 to December 31, 2012

Other:

REQUEST FOR FUNDS

(1) Organization's Name & Address: PINEBELT Community Services – Jobs Program Telephone Number: 601-583-4943	Project Address: 1101 North Main Street Hattiesburg, MS 39401	Request No. 2 Worked Performed: Construction training supplies (5) Amount Requested: $977.62
(6) Project Period From: June 5, 2012 To: December 31, 2012	(7) Check Made Payable to: PINEBELT Community Services – Jobs Program	Prepared By: Clarence P. Williams Date Prepared October 10, 2012,

Signature of Authorized Officer Requesting Funds — October 10, 2012 Date

Clarence P. Williams, Program Director
Type Name and Title of Authorized Office

Signature of City Official Approving Disbursement — 10/29/12 Date

Type Name and Title of City Official

"I HEREBY CERTIFY THAT the costs included in this request are for services rendered and allowable costs/expenditures in accordance with approved contract agreement between the City of Hattiesburg and the certifying agency and that the amounts requested do not exceed the total funds obligated by the contract".

Revised 10/04

REQUEST FOR FUNDS SUPPORT SHEET

Recipient's Name: PINEBELT Community Services- Jobs Training
Contract Date: 06/05/2012

Request Number #2 Total Amount Requested ** $ 977.62

Funds requested are for Meals Program Costs and Expenses

1 Construction Materials – Job Site Training	$ 977.62
2)	$
3)	$
4)	$
5)	$
6)	$
7)	$
Total of Attached Documentation	$ 977.62
Less Amount in Excess of Contract Award	$
** Total Amount Requested for this Draw	$ 977.62
TOTAL REQUESTED TO DATE	$ 6,977.62

Period of Project(s) Start to Completion From: June 2012 to December 31, 2012

Other: _____

Eve's House, Inc.

Eve's House, Inc.
P.O. Box 721
Hattiesburg, MS 39403

(601)545-1879
eves.house1@yahoo.com
www.eveshouse.com

Invoice

Date	Invoice #
10/08/2012	1007
Terms	**Due Date**
Due on receipt	10/08/2012

Bill To
CDBG Public Service Grant CDBG Public Service Grant City of Hattiesburg Dept of Federal & State Programs emailed to Ellard, Andrew

Amount Due	Enclosed
$842.39	

Activity	Amount
• Life management course material	37.74
• Life management course material	185.34
• Life management course material	76.52
• supplies copy paper	42.79
• skill building instruction cost	500.00
Total	$842.39

Eve's House, Inc.

Eve's House, Inc.
P.O. Box 721
Hattiesburg, MS 39403

(601)545-1879
eves.house1@yahoo.com
www.eveshouse.com

Invoice

Date	Invoice #
10/19/2012	1008
Terms	**Due Date**
Due on receipt	10/19/2012

Bill To

CDBG Public Service Grant
City of Hattiesburg
Dept of Federal & State Programs
emailed to Ellard, Andrew

Amount Due	Enclosed
$788.86	

Activity	Amount
• ink cartridge	47.05
• Curriculum material	481.81
• life management skills instruction	260.00
Total	$788.86

AB
10/29/12

BONNER ANALYTICAL
2703 Oak Grove Rd.
Hattiesburg, MS 39402

Invoice

Customer No.: HATT
Invoice No.: 50886

Bill To: **CITY OF HATTIESBURG**
ACCOUNTING DEPT
P O BOX 1898
HATTIESBURG, MS 39403-1898

Ship To: **CITY OF HATTIESBURG**
ATTN: RANDY JORDAN
P O BOX 1898
HATTIESBURG, MS 39403-1898

Date	Ship Via	F.O.B.	Terms
10/10/12		Origin	

Purchase Order Number	Order Date	Sales Person	Our Order Number
	10/10/12		

Quantity Required	Quantity Shipped	Quantity B.O.	Item Number	Description	Unit Price	Amount
1	1			LEAD BASED PAINT CLEARANCE INSPECTION PERFORMED 10-03-12 @ 127 E. 5TH STREET HATTIESBURG, MS	97.65	97.65
				Invoice subtotal		97.65
				Invoice total		97.65

Thank You

10-15-12A10:41 RCVD

BONNER ANALYTICAL TESTING COMPANY

2703 OAK GROVE ROAD, HATTIESBURG, MS 39402
PHONE: (601) 264-2854 FAX: (601) 268-7084

Lead-Based Paint Clearance Report

The clearance inspection for the 127 East 5th St. in Hattiesburg, MS 39401 was conducted on October 3rd, 2012. The goal of the visual inspection is to determine if all interior and exterior surfaces identified as lead hazards in the risk assessor and/or paint inspection report(s) were completed and to ensure that no visible settled dust or debris resulting from lead hazard controls, paint-disturbing renovation and/ or maintenance are present. The visual assessment of the exterior dwelling identified several areas of concern where compliance with clearance standards could not be achieved. In the current status, the 127 East 5th St. dwelling fails the clearance of the inspector's visual assessment.

Clearance failure of the exterior examination resulted from the following:

1. The Lead-Based Paint Evaluation Report detected elevated lead levels on several outside surfaces. Upon arrival, safety barriers and polyethylene plastic sheeting were removed from the site. Visual inspection of the porch identified excessive settled dust on the porch surface.

Due to the presence of settled dust, visual examination of the interior dwelling was not performed in order to prevent possible cross contamination. Additionally, environmental sampling (i.e., dust and soil) of the interior and exterior was not performed.

Following HUD Guidelines the clearance inspection for 127 E. 5th St., on the date tested.

FAILED

Recommendations: Reevaluation of 127 East 5th St. clearance examination should be performed once the proper corrective actions are taken to resolve the clearance failures.

Clearance Levels:

Wipes- Floors:	40 ug/ft^2	Soil-Play Area:	400 ppm
Wipes- Window Sill:	250 ug/ft^2	Soil- Yard	1200 ppm
Wipes- Window Wells:	400 ug/ft^2	Soil Replacement:	200 ppm
Wipes-Exterior Concrete:	800 ug/ft^2		

Prepared By:

for KLP

Mr. Kevin L. Pearson , Certified LBP Firm & Risk Assessor
Certification # MS PBF-00000019, PRA-00002949 , License # MS-568-01

B & F Tactical Store
103 Broadway Drive Hattiesburg, MS 39401
Phone: 601 544-4463 Cell: 601 310-4156

DRAW #5

REQUEST FOR FUNDS

DATE	LINE ITEM TITLE	TOTAL BUDGET	BALANCE FORWARD		REQUEST	Remaining BALANCE
10/22/2012	RENT & UTILITIES	**$6,900.00**	**$3,632.58**		860.96	2,771.62
10/22/2012	MARKETING	**$1,500.00**	**$1,307.40**		0.00	1,307.40
10/22/2012	INVENTORY, SUPPLIES, SIGNAGE, & FIXTURES	**$5,400.00**	**$1,123.74**		1,120.82	2.92
10/22/2012	INSURANCE	**$1,200.00**	**$935.35**		176.44	758.91
10/22/2012	MISCELLANEOUS (requires prior staff review)	**$0.00**	**$0.00**		0	0
		$15,000.00	**$6,999.07**		**Total Request**	
					$2,158.22	**$4,840.85**

Signed Dessie Minor Date 10-22-2012

B & F Distributors LLC
103 Broadway Drive
Hattiesburg, MS 39401
601 544-4463

WORKSHEET 10/22/2012
Receipts and Invoices Attached

RENT & UTILITIES

Rent	825.00	increase see lease
Hattiesburg Water	35.96	
TOTAL RENT AND UTILITIES	$860.96	

INVENTORY, SUPPLIES, SIGNAGE & FIXTURES

Fenix	9/11/2012	118.11
Kroll	9/12/2012	179.59
Atlanco	9/12/2012	143.85
M J Soffee	9/13/2012	54.63
Rite in the Rain	9/14/2012	340.55
Rothco	9/21/2012	90.43
Kroll	9/27/2012	193.66
Total Inventory		$1,120.82

Insurance

Alfa Insurance	10/17/2012	$176.44

City of Hattiesburg, MS

200 Forrest St.
P.O. Box 1898
Hattiesburg, MS 39401

Master

File Number: 2012-1315

File ID:	2012-1315	**Type:**	Regular Agenda Item	**Status:**	Agenda Ready
Version:	1	**Reference:**		**In Control:**	City Council
				File Created:	10/30/2012
Brief Title:	HOME Manual Checks			**Final Action:**	
				Minute Book Number:	MB2012-1/388

Title:

Approve and authorize issuance of manual checks for HOME Program Claims per attached memorandum.{Entitlement}

Notes:

Sponsors:		**Enactment Date:**	
Attachments:	MEMORANDUM-Manual Checks-HOME, HOME Supporting Docs	**Enactment Number:**	
Contact:		**Meeting Date:**	11/06/2012
Drafter:		**Effective Date:**	

History of Legislative File

Version:	Acting Body:	Date:	Action:	Sent To:	Due Date:	Return Date:	Result:
1	City Council	11/06/2012					

Text of Legislative File 2012-1315

Title

Approve and authorize issuance of manual checks for HOME Program Claims per attached memorandum.{Entitlement}

Summary

HOME Manual Checks

Budget Information

Expenditure Type

Purchasing Item

Publication Information

MEMORANDUM

TO: City of Hattiesburg Council Members

FROM: Franklyn L. Tate, Director
Department of Federal & State Programs

SUBJECT: Authorize issuance of manual checks for HOME Program claims

DATE: October 30, 2012

The following request for payment is being submitted for approval during the City Council's November 6, 2012 meeting. Please authorize and approve issuance of a manual check for the claims listed below:

Recipient:	**Smith's Remodeling**
Activity:	Rehabilitation
Program:	HOME
Project Site:	1 Alder Lane
Amount Requested:	**$15,235.00**
Purpose of Request:	Draw #3
Work Provided by:	Smith's Remodeling

Recipient:	**Norris Construction**
Activity:	Rehabilitation
Program:	HOME
Project Site:	310 N 21st Ave.
Amount Requested:	**$34,000.00**
Purpose of Request:	Draw #1 (final)
Work Provided by:	Norris Construction

Recipient:	**Community Connections**
Activity:	New Construction
Program:	HOME
Project Site:	620 Barkley Rd.
Amount Requested:	**$19,678.00**
Purpose of Request:	Draw #3
Work Provided by:	Smith's Remodeling & Pinebelt Electrical & A/C

Recipient:	**Housing Alternatives**
Activity:	New Construction
Program:	HOME
Project Site:	437 Mable St.
Amount Requested:	**$1,550.00**
Purpose of Request:	Draw #2
Work Provided by:	Habitat for Humanity & Mac's Restoration

SMITH'S REMODELING

OWNER: JOHNNIE L. SMITH
Phone #(601)408-3588

Address: **28 Pine Street**
Hattiesburg, MS 39402

Job Performed For:
The City of Hattiesburg/Sandra McDuffie
1 Alder Lane
Hattiesburg, MS 39401

Request: **Final draw for work done according to work write-up.**

$15,235,.00

Signature: Johnnie L Smith
Date: 10-21-12

INVOICE

Bill To:

City of Hattiesburg
Randy Jordan
Housing Program Inspector
Hattiesburg, Ms. 39403

Date: 10-23-12

Invoice #4

Thank you for your business.

Description				Total
Ernestine McGee Final Draw Request	310 N. 21st Ave.			$34,000.00
TOTAL AMOUNT DUE:				**$34,000.00**

Norris Construction Company, Inc. ~ 57 Carter Drive, Seminary, Ms. 39479 ~ Phone: (601)722-4431 ~ Fax: (601)722-4268

REQUEST FOR FUNDS

(1) Organization's Name & Address: Community Connections Inc. Post Office Box 18612 Hattiesburg, MS 39404-8612 Telephone Number: 601-261-0820	(2) Project Address: 620 Barkley Road Hattiesburg, MS 39401	(3) Request No. 3 (4) Work Performed: Framing-Black In (5) Amount Requested: $ 19,678.00
(6) Project Period From: 9-26-12 To: 10-29-12	(7) Make Check Payable to: COMMUNITY CONNECTIONS INC	(8) Prepared By: DONNA ALI Date Prepared 10-29-12

"I HEREBY CERTIFY THAT the costs included in this request are for services rendered and allowable costs and expenditures in accordance with approved contract agreement between the City of Hattiesburg and the certifying agency or Interdepartmental MOU (Memorandum of Understanding), and that amounts requested do not exceed the total funds obligated by the contract agreement or MOU whichever applicable."

Donna A. Ali

Signature of Authorized Officer Requesting Funds — **Date** 10-29-12

Donna Ali, Executive Director

Type Name and Title of Authorized Requesting Officer

Signature of City Official Approving Disbursement — **Date** 10-30/12

Type Name and Title of City Official

Revised 10/04

REQUEST FOR FUNDS SUPPORT SHEET

Recipient's Name COMMUNITY CONECTIONS INC. **Contract Date:** **May 4, 2010**

Request Number 3 Total Amount Requested ** **$19,678.00**

Funds requested are for Construction Costs incurred by Community Connections, Inc., CHDO for 620 Barkley Road.

1) Johnnie Smith-Framing,roofing,windows,etc.	$ 18,000.00
2) Portable Services-Toilets	$ 53.50
3) Mississippi Power Company-Temp Pole	$ 24.50
4) PineBelt Electrical & A/C	$ 1,600.00
5)	$
6)	$
7)	$

****Total Amount Requested for this Draw** $ 19,678.00

TOTAL REQUESTED TO DATE $ 19,678.00 RD

Period of Service(s) Starting and Ending From 9-26-12 to 10-29-12

Hours Authorized and Funded: ____ Hours Worked: _____

Other: _____

REQUEST FOR FUNDS

(1) Organization's Name & Address: Housing Alternatives in Hattiesburg, inc. PO Box 18679 Hattiesburg, MS. 39404 Telephone Number: ___(601) 544 - 9140_____	(2) Project Address: 437 Mable Street Hattiesburg, MS. 39401	(3) Request No. 101 2 (4) Work Performed: Tree Removal (5) Amount Requested: $___1,550.___
(6) Project Period From: __June , 2012 _____ To: _____	(7) Check Made Payable to: Housing Alternatives in Hattiesburg, Inc.	(8) Prepared By: Katie Weeks Date Prepared 10/30/2012

Katie Weeks
Signature of Authorized Officer Requesting Funds

10/30/12
Date

_Katie Weeks, Housing Counseling Coordinator_____
Type Name and Title of Authorized Officer

Signature of City Official Approving Disbursement

10/30/12
Date

_____
Type Name and Title of City Official

"I HEREBY CERTIFY THAT the costs included in this request are for services rendered and allowable costs/expenditures in accordance with approved contract agreement between the City of Hattiesburg and the certifying agency and that amounts requested do not exceed the total funds obligated by the contract.

Revised 10/04

REQUEST FOR FUNDS SUPPORT SHEET

Recipient's Name: Housing Alternatives in Hattiesburg, INC.

Contract Date: 6-12-12

Request Number: ~~10T~~ #2

Total Amount Requested: $ 1,550

Funds requested are for construction costs and other eligible costs associated with the following CHDO activity(ies):

1) $ 1,550 - Tree Removal

Total of Attached Documentation	$ 1550
Less Amount in Excess of Contract Award	$ —
****Total Amount Requested for this Draw**	$ 1550. AE
TOTAL REQUESTED TO DATE	$ ~~10,868.80~~ $9,050.00

Period of Project(s) Start to Completion 6/12 to _____

Other: _____

City of Hattiesburg, MS

200 Forrest St.
P.O. Box 1898
Hattiesburg, MS 39401

Master

File Number: 2012-1288

File ID:	2012-1288	**Type:**	Regular Agenda Item	**Status:**	Agenda Ready
Version:	1	**Reference:**		**In Control:**	City Council
				File Created:	10/26/2012
Brief Title:	Approve claims docket			**Final Action:**	
				Minute Book Number:	MB2012-1/388

Title:

Approve claims docket for the period ending October 31, 2012.

Notes:

Sponsors:		**Enactment Date:**	
Attachments:	Claims docket10.31.12, ADDENDUM 11.5.12	**Enactment Number:**	
Contact:		**Meeting Date:**	11/06/2012
Drafter:	Marilyn Schwandt	**Effective Date:**	

History of Legislative File

Version:	Acting Body:	Date:	Action:	Sent To:	Due Date:	Return Date:	Result:
1	City Council	11/06/2012					

Text of Legislative File 2012-1288

Title

Approve claims docket for the period ending October 31, 2012.

Summary

Budget Information

Expenditure Type

Purchasing Item

Publication Information

CITY OF HATTIESBURG
DOCKET OF CLAIMS
PERIOD ENDING OCTOBER 31, 2012

Date - 10/30/12

	Vendor	Invoice Number	Purchase Order	Claims Number	Item Description	Check Date	Check No.	Check Amount
GENERAL FUND								
00001	A & R FARM AND GARDEN	225781	00128098	12000439	LOG TONGS CONSTR SHOP	10/31/12	226652	90.00-
A & RFARM AND GARDEN								
Sum								90.00-
00001	AAMCO TRANS/AUTOMOTIVE S	124846	00127916	12000368	REPRS U#17314 POLICE	10/31/12	226653	1,575.00-
AAMCOTRANS/AUTOMOTIVE S								
Sum								1,575.00-
00001	ADVANCE AUTO PARTS	560422923248	00128142	12000619	RADIATOR U#17017 STREET	10/31/12	226654	171.41-
ADVANCE AUTO PARTS								
Sum								171.41-
00001	ALL SOUTH PORTABLE SANIT	9652	00127979	12000428	PORTALET CIVIC CNTR PK GARAGE	10/31/12	226655	75.00-
ALL SOUTH PORTABLE SANIT								
Sum								75.00-
00001	ALLBRITTON CHAIN SAW & L	23195	00127994	12000395	AGRI EQUIP REPR PTS FORESTRY	10/31/12	226656	259.60-
00001	ALLBRITTON CHAIN SAW & L	23313	00128147	12000464	REPR PTS U#17508 STREET	10/31/12	226656	505.62-
ALLBRITTON CHAIN SAW & L								
Sum								765.22-
00001	AMERICAN CONCRETE PRODUC	56136	00128372	12000660	DOOR LOCK #3 FIRE STA	10/31/12	226658	75.00-
AMERICAN CONCRETE PRODUC								
Sum								75.00-
00001	AMERICAN PLANNING ASSN (	151464	00126838	12000456	APA PLANNING BOOKS-SCRUGGS	10/31/12	226659	539.34-
AMERICAN PLANNING ASSN (								
Sum								539.34-
00001	AT&T	601M26940440	00020131	12000429	SERV 10/8-11/7/12 VARI DEPTS	10/31/12	226663	279.75-
AT&T								
Sum								279.75-
00001	AUTO ARMATURE SERVICE IN	6086	00127960	12000422	BATTERY U#16240 CONSTR	10/31/12	226664	119.95-
00001	AUTO ARMATURE SERVICE IN	6147	00128148	12000465	BATTERY U#11356 STREET	10/31/12	226664	95.95-
AUTO ARMATURE SERVICE IN								
Sum								215.90-
00001	AUTO TRIM	5864	00127936	12000421	LETTERS/NUMBERS SHOP SUPP	10/31/12	226665	35.00-
AUTO TRIM								

	Vendor	Invoice Number	Purchase Order	Claims Number	Item Description	Check Date	Check No.	Check Amount
Sum								35.00-
00001	B & F TACTICAL STORE	255	00128073	12000637	SHIRTS/SHOES POLICE STOCK	10/31/12	226666	608.30-
B & FTACTICAL STORE								
Sum								608.30-
00001	BEAVER INDUSTRIES INC	10252	00128323	12000591	CAR CLEAN SUPP POLICE DEPT	10/31/12	226670	86.00-
BEAVERINDUSTRIES INC								
Sum								86.00-
00001	BELK DEPARTMENT STORE	P935600LR00X	00127460	12000625	CLOTH ALLOW-ROBINISON-POLICE	10/31/12	226671	132.47-
00001	BELK DEPARTMENT STORE	P935600MD00Y	00127827	12000626	CLOTH ALLOW-WAHL-POLICE	10/31/12	226671	330.17-
00001	BELK DEPARTMENT STORE	P935600MD00X	00127890	12000627	CLOTH ALLOW-VAUGHN-POLICE	10/31/12	226671	169.73-
00001	BELK DEPARTMENT STORE	P935600ND00Y	00127892	12000628	CLOTH ALLOW-RAYNER-POLICE	10/31/12	226671	301.20-
00001	BELK DEPARTMENT STORE	P935600MD00Y	00127995	12000629	CLOTH ALLOW-WAHL-POLICE	10/31/12	226671	135.00-
00001	BELK DEPARTMENT STORE	P935600ML00X	00128071	12000630	CLOTH ALLOW-MCGINTY-POLICE	10/31/12	226671	290.86-
BELK DEPARTMENT STORE								
Sum								1,359.43-
00001	BELL, BRANDON	EMT EXAM FEE	00128355	12000602	EMT EXAM FEE REIMB 6/17/12	10/31/12	226672	70.00-
BELL,BRANDON								
Sum								70.00-
00001	BENNETT'S LOCK & KEY SHO	61926	00128194	12000664	MASTER LOCKS SIGNAL CABINETS	10/31/12	226674	93.00-
BENNETT'S LOCK & KEY SHO								
Sum								93.00-
00001	BOAM	REG-JORDAN 1	00128362	12000615	REG-JORDAN SMNAR HERNANDO	10/31/12	226678	250.00-
BOAM								
Sum								250.00-
00001	BODY TECH INC	4440	00128062	12000597	REPRS U#18325 POLICE	10/31/12	226679	1,945.60-
00001	BODY TECH INC	4440(B)	00128255	12000598	REPRS U#18325 POLICE	10/31/12	226679	688.13-
00001	BODY TECH INC	4441	00128292	12000599	REPR WINDSHIELD U#17804	10/31/12	226679	46.45-
BODY TECH INC								
Sum								2,680.18-
00001	BOURNE BROTHERS PRINTING	45556	00128159	12000513	HEALTHY HOMETOWN FLYERS	10/31/12	226682	200.00-
BOURNEBROTHERS PRINTING								
Sum								200.00-
00001	BRACKMAN MOWER WAREHOUSE	IN0115711	00128344	12000642	MOWER REPR PTS STREET DEPT	10/31/12	226683	77.28-
00001	BRACKMAN MOWER WAREHOUSE	IN0115604	00128156	12000675	MOWER REPR PTS CEMETERY	10/31/12	226683	164.46-
BRACKMAN MOWER WAREHOUSE								
Sum								241.74-

	Vendor	Invoice Number	Purchase Order	Claims Number	Item Description	Check Date	Check No.	Check Amount
00001	BROADWAY DRIVE TIRE	085222	00128404	12000695	TIRES U#14684 LAND CODE	10/31/12	226684	266.56-
BROADWAY DRIVE TIRE								
Sum								266.56-
00001	BRYANT, GREGORY	EMT EXAM FEE	00128357	12000603	EMT EXAM FEE REIMB 9/24/12	10/31/12	226688	70.00-
00001	BRYANT, GREGORY	TRAVEL REIMB	00128367	12000609	EXPNS ROPE RESCUE TRNG JKSN	10/31/12	226689	112.70-
BRYANT, GREGORY								
Sum								182.70-
00001	C & S AUTOMOTIVE LLC	137	00128325	12000600	REPRS U#15781 POLICE	10/31/12	226694	112.00-
C & SAUTOMOTIVE LLC								
Sum								112.00-
00001	C SPIRE WIRELESS (CELLUL	9/23/12-10/2	00201351	12000646	CELL SERV 9/12 VARI DEPTS	10/31/12	226695	7,134.70-
C SPIRE WIRELESS (CELLUL								
Sum								7,134.70-
00001	CALDWELL, SAM	EMT EXAM FEE	00128354	12000604	EMT EXAM FEE REIMB 7/10/12	10/31/12	226696	70.00-
CALDWELL, SAM								
Sum								70.00-
00001	CERTIFIED LABORATORIES	886328	00128040	12000455	CHEMICALS-HEALTH	10/31/12	226700	4,710.75-
CERTIFIED LABORATORIES								
Sum								4,710.75-
00001	CHAIN ELECTRIC COMPANY	21349	00127186	12000644	EVALUATE GENERATOR MCNAIR CTR	10/31/12	226701	3,000.00-
CHAINELECTRIC COMPANY								
Sum								3,000.00-
00001	CITY OF HATTIESBURG FUND	101712	00201343	12000413	TRF 10/19/12 PAYROLL	10/17/12	17004	1,031,409.00-
CITY OF HATTIESBURG FUND								
Sum								1,031,409.00-
00001	COMCAST CABLEVISION OF H	095776410200	00128070	12000371	BRDBAND 10/15-11/14 #7 FIRE	10/31/12	226704	45.95-
00001	COMCAST CABLEVISION OF H	095777340100	00128236	12000559	SERVS AIRPORT CONSTR OFFICE	10/31/12	226704	72.54-
COMCAST CABLEVISION OF H								
Sum								118.49-
00001	COMSOUTH	1637122	00127686	12000364	RADIO BATTERIES-STUART-POLICE	10/31/12	226705	168.00-
00001	COMSOUTH	167097	00127686	12000365	RADIO REPR-ROCKHOLD-POLICE	10/31/12	226705	159.00-
00001	COMSOUTH	167274	00127802	12000595	RADIO BATTERY POLICE DEPT	10/31/12	226705	84.00-
00001	COMSOUTH	167006	00127802	12000596	RADIO REPR U#16130 POLICE	10/31/12	226705	162.35-
00001	COMSOUTH	167420	00128339	12000643	RADIO REPR U#16319 COLE	10/31/12	226705	80.00-
COMSOUTH								

	Vendor	Invoice Number	Purchase Order	Claims Number	Item Description	Check Date	Check No.	Check Amount
Sum								653.35-
00001	COURTESY MOTORS INC	389030	00127788	12000423	REPR PTS U#15964 SANIT	10/31/12	226709	23.23-
00001	COURTESY MOTORS INC	389520	00127788	12000424	REPR PTS U#15964 SANIT	10/31/12	226709	23.23-
COURTESY MOTORS INC								
Sum								46.46-
00001	CRAIN TRACTOR & EQUIPMEN	CS77172 FRT	00127619	12000457	FREIGHT CHGS	10/31/12	226711	12.00-
CRAINTRACTOR & EQUIPMEN								
Sum								12.00-
00001	DELTA FOREMOST CHEMICAL	934251	00128149	12000639	JANIT SUPP FIRE DEPT	10/31/12	226720	670.00-
DELTAFOREMOST CHEMICAL								
Sum								670.00-
00001	DELTACOM (EQUIPMENT SALE	12300695	00127047	12000635	TELEPHONES-TRAIN DEPOT	10/31/12	226721	882.60-
DELTACOM (EQUIPMENT SALE								
Sum								882.60-
00001	DEPOT COFFEEHOUSE AND BI	134795	00128130	12000587	REFRSHMNTS MPO MEETING 10/17	10/31/12	226722	59.80-
DEPOTCOFFEEHOUSE AND BI								
Sum								59.80-
00001	DILLARD, ROBERT	EMT EXAM FEE	00128353	12000605	EMT EXAM FEE REIMB 5/8/12	10/31/12	226724	70.00-
DILLARD, ROBERT								
Sum								70.00-
00001	DILLARDS DEPARTMENT STOR	P933600LTOOX	00127461	12000506	CLOTH ALLOW-ROBINSON-POLICE	10/31/12	226725	153.56-
00001	DILLARDS DEPARTMENT STOR	P933600M900X	00127751	12000507	CLOTH ALLOW-BOLTON-POLICE	10/31/12	226725	1,213.90-
00001	DILLARDS DEPARTMENT STOR	P933600M900X	00127808	12000508	CLOTH ALLOW-FRAZIER-POLICE	10/31/12	226725	405.50-
00001	DILLARDS DEPARTMENT STOR	P933600ME00X	00127917	12000509	CLOTH ALLOW-PACK-POLICE	10/31/12	226725	149.99-
DILLARDS DEPARTMENT STOR								
Sum								1,922.95-
00001	EATION, JOHN	TRAVEL REIMB	00128190	12000453	EXPNS MAZ MATL CLASSES JCKSN	10/31/12	226734	90.95-
EATION, JOHN								
Sum								90.95-
00001	ECO-SYSTEMS INC	0120741	00128432	12000705	SERVS 9/12 J ED TURNER SITE	10/31/12	226735	1,558.27-
ECO-SYSTEMS INC								
Sum								1,558.27-
00001	ECONOMY SUPPLY CO	178976	00127811	12000385	MATLS-BREAK IN REPR EATON SCH	10/31/12	226736	35.95-
00001	ECONOMY SUPPLY CO	179374	00128000	12000522	DOOR STOPS TRAIN DEPOT	10/31/12	226736	266.00-
00001	ECONOMY SUPPLY CO	179176	00128010	12000538	BLDG MATLS #6 FIRE STA	10/31/12	226736	144.80-
00001	ECONOMY SUPPLY CO	179329	00128033	12000554	LOCKS CONSTR DEPT	10/31/12	226736	45.95-

	Vendor	Invoice Number	Purchase Order	Claims Number	Item Description	Check Date	Check No.	Check Amount
00001	ECONOMY SUPPLY CO	179590	00128082	12000558	FENCING AIRPORT DUMPSTER PAD	10/31/12	226736	681.38-
ECONOMY SUPPLY CO								
Sum								1,174.08-
00001	ELKINS WHOLESALE INC	155636-00	00128105	12000552	GLOVES PUBLIC WORKS DEPT	10/31/12	226737	99.80-
ELKINSWHOLESALE INC								
Sum								99.80-
00001	EMERGENCY EQUIPMENT PROF	404714	00127859	12000370	REPR PTS U#13932 FIRE DEPT	10/31/12	226738	102.63-
00001	EMERGENCY EQUIPMENT PROF	404822	00128056	12000534	HELMETS,BADGES FIRE DEPT	10/31/12	226738	1,362.41-
00001	EMERGENCY EQUIPMENT PROF	404822(B)	00128067	12000535	ADDL AMT DUE PO#128056	10/31/12	226738	50.68-
00001	EMERGENCY EQUIPMENT PROF	404860	00128256	12000640	REPR PTS U#13933 FIRE DEPT	10/31/12	226738	768.19-
EMERGENCY EQUIPMENT PROF								
Sum								2,283.91-
00001	EMERGENCY MEDICAL PRODUC	1502427	00127926	12000369	MEDICAL SUPP FIRE DEPT	10/31/12	226739	696.65-
00001	EMERGENCY MEDICAL PRODUC	1505043	00128222	12000713	MEDICAL SUPP FIRE DEPT	10/31/12	226739	445.50-
EMERGENCY MEDICAL PRODUC								
Sum								1,142.15-
00001	EMPIRE TRUCK SALES (H'BU	CE006070379:	00128207	12000620	REPR PTS U#13174 STREET	10/31/12	226740	160.58-
EMPIRETRUCK SALES (H'BU								
Sum								160.58-
00001	EVANS, JERRY PA	373	00128136	12000447	SERVS DANIEL RAY VS CITY	10/31/12	226743	1,666.05-
EVANS,JERRY PA								
Sum								1,666.05-
00001	EXPERT TIRE	176278	00127770	12000374	REPRS U#14701 FIRE DEPT	10/31/12	226744	562.55-
EXPERTTIRE								
Sum								562.55-
00001	FASTENAL COMPANY	MSHAT146424	00127567	12000441	WORK BOOTS PUBLIC WORKS DEPT	10/31/12	226747	666.72-
00001	FASTENAL COMPANY	MSHAT146687	00127778	12000553	HAND TOOLS CONSTR DEPT	10/31/12	226747	439.29-
00001	FASTENAL COMPANY	MSHAT146862	00128037	12000557	PALLET STRETCH WRAP AIRPORT	10/31/12	226747	42.50-
00001	FASTENAL COMPANY	MSHAT145647	00127096	12000648	CAR LIFT INSTALL SUPP-POLICE	10/31/12	226747	245.86-
00001	FASTENAL COMPANY	MSHAT146658	00127096	12000649	CAR LIFT INSTALL SUPP-POLICE	10/31/12	226747	25.47-
00001	FASTENAL COMPANY	MSHAT146934	00128039	12000650	CAR LIFT INSTALL SUPP-POLICE	10/31/12	226747	25.47-
00001	FASTENAL COMPANY	MSHAT147769	00128203	12000659	CAR LIFT INSTALL SUPP-POLICE	10/31/12	226747	54.78-
00001	FASTENAL COMPANY	MSHAT147052	00128127	12000663	MINOR EQUIP TRAFFIC DEPT	10/31/12	226747	680.56-
00001	FASTENAL COMPANY	MSHAT147986	00128203	12000676	CREDIT RETURN	10/31/12	226747	24.87
FASTENAL COMPANY								
Sum								2,155.78-
00001	FEDERAL EXPRESS	2-037-24078	00128046	12000384	SERV 9/25/12 ENGR	10/31/12	226748	18.40-

	Vendor	Invoice Number	Purchase Order	Claims Number	Item Description	Check Date	Check No.	Check Amount
00001	FEDERAL EXPRESS	2-044-56340	00128273	12000516	SERV 10/4/12 HESKEW-PLANN	10/31/12	226748	16.29-
00001	FEDERAL EXPRESS	2-044-56340(	00128273	12000517	SERV 10/3/12 BENSON FED/STATE	10/31/12	226748	54.93-
00001	FEDERAL EXPRESS	2-052-13268	00128334	12000588	SERV 10/9/12 BENSON FED/STATE	10/31/12	226748	21.28-
00001	FEDERAL EXPRESS	2-052-13268(	00128334	12000589	SERV 10/9/12 ENGR	10/31/12	226748	17.20-
FEDERAL EXPRESS								
Sum								128.10-
00001	FORD, PHILLIP	PETTY CASH 1	00128406	12000696	PETTY CASH TRAFF/CONST/AIRPT	10/31/12	226751	455.26-
FORD,PHILLIP								
Sum								455.26-
00001	FOREMOST PROMOTIONS	189274	00126824	12000693	FIRE EDUCATION SUPPLIES	10/31/12	226752	2,065.00-
FOREMOST PROMOTIONS								
Sum								2,065.00-
00001	FORENSICS SOURCE	812-129589	00127385	12000451	VERSACONES-NET TEAM	10/31/12	226753	82.53-
FORENSICS SOURCE								
Sum								82.53-
00001	FORREST CTY CHANCERY CLK	BILLING #25	00128052	12000375	MNTHLY ARREARAGE 10/12	10/31/12	226754	13,798.81-
FORREST CTY CHANCERY CLK								
Sum								13,798.81-
00001	FORREST CTY CHANCERY COU	RECORDING FE	00128369	12000585	RECORDING FEES MUN CLERK	10/31/12	226755	121.00-
FORREST CTY CHANCERY COU								
Sum								121.00-
00001	FUELMAN OF MS	BG127044 NP3	00128111	12000437	FUEL CHGS 10/1-7/12 STREET	10/31/12	226759	91.95-
00001	FUELMAN OF MS	BG127044 NP3	00128271	12000525	FUEL CHGS 10/8-14 FED/STATE	10/31/12	226759	55.29-
00001	FUELMAN OF MS	BG127044 NP3	00128274	12000547	FUEL CHGS 10/1-7/12 QUINN-LDC	10/31/12	226759	71.75-
00001	FUELMAN OF MS	BG127044 NP3	00128457	12000684	FUEL CHGS 10/15-21/12 POLICE	10/31/12	226759	188.84-
FUELMAN OF MS								
Sum								407.83-
00001	G & K SERVICES	1035305021	00128051	12000405	UNIFORMS 9/04 CEM/FORESTRY	10/31/12	226768	52.00-
00001	G & K SERVICES	1035307107	00128051	12000406	UNIFORMS 9/11 CEM/FORESTRY	10/31/12	226768	52.00-
00001	G & K SERVICES	1035309156	00128051	12000407	UNIFORMS 9/17 CEM/FORESTRY	10/31/12	226768	52.00-
00001	G & K SERVICES	1035311213	00128051	12000408	UNIFORMS 9/25 CEM/FORESTRY	10/31/12	226768	52.00-
00001	G & K SERVICES	1035305022	00128051	12000409	MOP/MAT 9/04 CEM/FORESTRY	10/31/12	226768	21.03-
00001	G & K SERVICES	1035307108	00128051	12000410	MOP/MAT 9/11 CEM/FORESTRY	10/31/12	226768	21.03-
00001	G & K SERVICES	1035309157	00128051	12000411	MOP/MAT 9/18 CEM/FORESTRY	10/31/12	226768	21.03-
00001	G & K SERVICES	1035311214	00128051	12000412	MOP/MAT 9/25 CEM/FORESTRY	10/31/12	226768	21.03-
00001	G & K SERVICES	1035311235	00128234	12000470	UNIFORMS 9/25 STREET	10/31/12	226768	144.00-
00001	G & K SERVICES	1035212390	00128234	12000471	UNIFORMS 10/02 STREET	10/31/12	226768	140.00-
00001	G & K SERVICES	1035315363	00128234	12000472	UNIFORMS 10/09 STREET	10/31/12	226768	140.00-

	Vendor	Invoice Number	Purchase Order	Claims Number	Item Description	Check Date	Check No.	Check Amount
00001	G & K SERVICES	1035317404	00128234	12000473	UNIFORMS 10/16 STREET	10/31/12	226768	136.00-
00001	G & K SERVICES	1035311236	00128234	12000474	UNIFORMS 9/25 SHOP	10/31/12	226768	148.00-
00001	G & K SERVICES	1035313291	00128234	12000475	UNIFORMS 10/02 SHOP	10/31/12	226768	148.00-
00001	G & K SERVICES	1035315364	00128234	12000476	UNIFORMS 10/09 SHOP	10/31/12	226768	148.00-
00001	G & K SERVICES	1035317405	00128234	12000477	UNIFORMS 10/16 SHOP	10/31/12	226768	148.00-
00001	G & K SERVICES	1035311231	00128234	12000478	UNIFORMS 9/25 GO&FS	10/31/12	226768	8.00-
00001	G & K SERVICES	1036312386	00128234	12000479	UNIFORMS 10/02 GO&FS	10/31/12	226768	8.00-
00001	G & K SERVICES	1035315359	00128234	12000480	UNIFORMS 10/09 GO&FS	10/31/12	226768	8.00-
00001	G & K SERVICES	1035317400	00128234	12000481	UNIFORMS 10/16 GO&FS	10/31/12	226768	8.00-
00001	G & K SERVICES	1035311238	00128234	12000482	MOP/MAT 9/25 GO&FS	10/31/12	226768	26.13-
00001	G & K SERVICES	1035315366	00128234	12000483	MOP/MAT 10/09 GO&FS	10/31/12	226768	26.13-
00001	G & K SERVICES	1035317407	00128234	12000484	MOP/MAT 10/16 GO&FS	10/31/12	226768	26.13-
00001	G & K SERVICES	1035313293	00128234	12000485	MOP/MAT 10/02 GO&FS	10/31/12	226768	26.62-
00001	G & K SERVICES	1035311230	00128234	12000486	UNIFORMS 9/25 DRNGE	10/31/12	226768	27.66-
00001	G & K SERVICES	1035313285	00128234	12000487	UNIFORMS 10/02 DRNGE	10/31/12	226768	27.66-
00001	G & K SERVICES	1035315358	00128234	12000488	UNIFORMS 10/09 DRNGE	10/31/12	226768	27.66-
00001	G & K SERVICES	1035317399	00128234	12000489	UNIFORMS 10/16 DRNGE	10/31/12	226768	27.66-
00001	G & K SERVICES	1035311234	00128234	12000490	UNIFORMS 9/25 SANIT	10/31/12	226768	136.72-
00001	G & K SERVICES	1035313289	00128234	12000491	UNIFORMS 10/02 SANIT	10/31/12	226768	138.54-
00001	G & K SERVICES	1035315362	00128234	12000492	UNIFORMS 10/09 SANIT	10/31/12	226768	138.54-
00001	G & K SERVICES	1035314703	00128234	12000493	UNIFORMS 10/16 SANIT	10/31/12	226768	143.27-
00001	G & K SERVICES	1035311237	00128234	12000494	MOP/MAT 9/25 SANIT	10/31/12	226768	17.38-
00001	G & K SERVICES	1035313292	00128234	12000495	MOP/MAT 10/02 SANIT	10/31/12	226768	17.38-
00001	G & K SERVICES	1035315365	00128234	12000496	MOP/MAT 10/09 SANIT	10/31/12	226768	17.38-
00001	G & K SERVICES	1035317406	00128234	12000497	MOP/MAT 10/16 SANIT	10/31/12	226768	17.38-
00001	G & K SERVICES	1035311232	00128234	12000498	UNIFORMS 9/25 ST CLEAN	10/31/12	226768	38.18-
00001	G & K SERVICES	1035313287	00128234	12000499	UNIFORMS 10/02 ST CLEAN	10/31/12	226768	38.18-
00001	G & K SERVICES	1035315360	00128234	12000500	UNIFORMS 10/09 ST CLEAN	10/31/12	226768	38.18-
00001	G & K SERVICES	1035317401	00128234	12000501	UNIFORMS 10/16 ST CLEAN	10/31/12	226768	38.18-
00001	G & K SERVICES	1035311233	00128234	12000502	UNIFORMS 9/25 HEALTH	10/31/12	226768	20.00-
00001	G & K SERVICES	1035313288	00128234	12000503	UNIFORMS 10/02 HEALTH	10/31/12	226768	20.00-
00001	G & K SERVICES	1035315361	00128234	12000504	UNIFORMS 10/09 HEALTH	10/31/12	226768	20.00-
00001	G & K SERVICES	1035317402	00128234	12000505	UNIFORMS 10/16 HEALTH	10/31/12	226768	20.00-
G & KSERVICES								
Sum								2,551.08-
00001	GARNER LUMLEY ELECTRIC S	480773	00127872	12000668	CHRISTMAS LIGHTS SUPP-CONSTR	10/31/12	226770	93.00-
GARNERLUMLEY ELECTRIC S								
Sum								93.00-
00001	GARY'S SMALL ENGINE REPA	PO#127940 10	00127940	12000373	CHAINSAW REPR U#14055 FIRE	10/31/12	226771	38.00-
GARY'SSMALL ENGINE REPA								
Sum								38.00-
00001	GILLILANDS ELECTRONICS S	53420	00128379	12000638	CHANGE CODE EVID ROOM ALARM	10/31/12	226774	35.00-

	Vendor	Invoice Number	Purchase Order	Claims Number	Item Description	Check Date	Check No.	Check Amount
GILLILANDS ELECTRONICS S								
Sum								35.00-
00001	GIRL SCOUTS OF GREATER M	HAT001	00128191	12000458	SPONSORSHIP WOMEN/DISTINCTION	10/31/12	226775	1,000.00-
GIRL SCOUTS OF GREATER M								
Sum								1,000.00-
00001	GLOBAL ATHLETICS & MARKE	4869	00128287	12000564	GUEST-B KNIGHT-HEALTHY H/TOWN	10/31/12	226777	1,000.00-
GLOBALATHLETICS & MARKE								
Sum								1,000.00-
00001	GREEN, WALTER	EMT EXAM FEE	00128356	12000606	EMT EXAM FEE REIMB 8/21/12	10/31/12	226778	70.00-
GREEN,WALTER								
Sum								70.00-
00001	H'BURG AMERICAN ACCT #1	HA0035737 9/	00128018	12000382	SUBSCRIPT 2012-2013 ENGR	10/31/12	226783	240.02-
H'BURGAMERICAN ACCT #1								
Sum								240.02-
00001	H'BURG HYDRAULICS INC	49128	00127580	12000381	REPR PTS U#12065 STREET	10/31/12	226786	140.72-
00001	H'BURG HYDRAULICS INC	49129	00127455	12000386	REPR PTS U#8242 SANIT	10/31/12	226786	104.83-
00001	H'BURG HYDRAULICS INC	49123	00127661	12000387	REPR PTS U#17725 SANIT	10/31/12	226786	289.12-
00001	H'BURG HYDRAULICS INC	49456	00128091	12000674	REPR PTS U#43 CEMETERY	10/31/12	226786	27.63-
00001	H'BURG HYDRAULICS INC	48225	00125880	12000677	REPR PTS U#16010 CEMETERY	10/31/12	226786	143.40-
H'BURGHYDRAULICS INC								
Sum								705.70-
00001	H'BURG PAINT AND DECORAT	W104256	00128294	12000651	FLOOR REPR MATLS-CRIME OFFICE	10/31/12	226787	50.97-
H'BURGPAINT AND DECORAT								
Sum								50.97-
00001	HANSON, LISA	TRAV ADVANCE	00128247	12000523	TRAV ADV-1099 SMNAR-BATON RGE	10/31/12	226789	420.04-
HANSON, LISA								
Sum								420.04-
00001	HAYES INSTRUMENT CO INC	638269	00127795	12000383	SURVEY EQUIP CHARGER-ENGR	10/31/12	226793	66.21-
HAYESINSTRUMENT CO INC								
Sum								66.21-
00001	HILL, LEROY COFFEE CO IN	10095	00128181	12000445	COFFEE SERV M/ADM	10/31/12	226795	61.61-
HILL,LEROY COFFEE CO IN								
Sum								61.61-
00001	HOME DEPOT	6052473	00127370	12000537	GRILL BURNERS FIRE DEPT	10/31/12	226796	44.91-

	Vendor	Invoice Number	Purchase Order	Claims Number	Item Description	Check Date	Check No.	Check Amount
HOME DEPOT								
Sum								44.91-
00001	HOVER GRAVEL CO	0141	00127451	12000529	RAISE LAKEVIEW RANGE BERM	10/31/12	226799	38,500.00-
HOVERGRAVEL CO								
Sum								38,500.00-
00001	HUGHES, SALLY W	12-11 RAILRO	00128424	12000702	SERVS RAILROAD PED CROSSINGS	10/31/12	226803	422.50-
00001	HUGHES, SALLY W	12-11 M L KI	00128424	12000703	SERVS M L KING AVE	10/31/12	226803	292.50-
HUGHES, SALLY W								
Sum								715.00-
00001	IDENTIX INC	65886	00127944	12000528	LIVESCAN MAINT 9/12-8/13 POL	10/31/12	226805	6,042.00-
IDENTIX INC								
Sum								6,042.00-
00001	INDIAN SPRINGS FARMERS A	1-102012	00128267	12000565	PRODUCE-HEALTHY HOMETOWN	10/31/12	226806	250.00-
INDIANSPRINGS FARMERS A								
Sum								250.00-
00001	INDOFF INC	2156041	00127372	12000403	JANIT SUPP PUB WORKS/SANIT	10/31/12	226807	83.98-
00001	INDOFF INC	2163957	00127372	12000404	CREDIT	10/31/12	226807	83.98
00001	INDOFF INC	2165411	00127873	12000530	JANIT SUPP FIRE DEPT	10/31/12	226807	1,984.98-
00001	INDOFF INC	2166246	00127873	12000531	JANIT SUPP FIRE DEPT	10/31/12	226807	212.64-
00001	INDOFF INC	2166928	00127873	12000532	JANIT SUPP FIRE DEPT	10/31/12	226807	385.40-
00001	INDOFF INC	2169273	00128080	12000533	JANIT SUPP FIRE DEPT	10/31/12	226807	152.75-
00001	INDOFF INC	2166444	00127930	12000551	OFFICE SUPP PUBLIC WORKS	10/31/12	226807	216.19-
00001	INDOFF INC	2171944	00128195	12000665	OFFICE SUPP-PERKINS-PUB WRKS	10/31/12	226807	129.90-
00001	INDOFF INC	2171946	00128195	12000666	OFFICE SUPP-PERKINS-PUB WRKS	10/31/12	226807	15.96-
INDOFFINC								
Sum								3,097.82-
00001	INNOVATIVE SERVICE SOLUT	20120113	00128092	12000415	DEFIBRILLATOR MNT FIRE DEPT	10/31/12	226809	750.00-
INNOVATIVE SERVICE SOLUT								
Sum								750.00-
00001	INTERFACE SECURITY SYSTE	16188165	00128053	12000396	SECURITY 10/12 CEM/FORESTRY	10/31/12	226810	31.45-
00001	INTERFACE SECURITY SYSTE	16255910	00128275	12000561	SECURITY 11/12 HILND CEM OFFC	10/31/12	226810	31.45-
INTERFACE SECURITY SYSTE								
Sum								62.90-
00001	INTERIOR CONSTRUCTION SU	0046068	00128295	12000652	FLOOR TILE-CRIME SCENE OFFICE	10/31/12	226811	115.20-
INTERIOR CONSTRUCTION SU								
Sum								115.20-
00001	IRBY, STUART C CO	S007033618.0	00127512	12000347	LIGHT BULBS CITY HALL	10/31/12	226812	68.40-

	Vendor	Invoice Number	Purchase Order	Claims Number	Item Description	Check Date	Check No.	Check Amount
00001	IRBY, STUART C CO	S007030781.0	00127021	12000520	ELEC SUPP-LIGHTS-TRAIN DEPOT	10/31/12	226812	200.00-
00001	IRBY, STUART C CO	S007030781.0	00127021	12000521	ELEC SUPP-LIGHTS-TRAIN DEPOT	10/31/12	226812	15.12-
00001	IRBY, STUART C CO	S00703693230	00127863	12000539	BAY HEATER PTS #6 FIRE STA	10/31/12	226812	744.30-
00001	IRBY, STUART C CO	S007073974.0	00127878	12000555	REPR PTS DOWNTOWN ST LIGHTS	10/31/12	226812	385.20-
00001	IRBY, STUART C CO	S007076269.0	00127894	12000568	ELEC SUPP-LIGHTS-CITY HALL	10/31/12	226812	36.75-
IRBY,STUART C CO								
Sum								1,449.77-
00001	JET CONSTRUCTION	1521	00127667	12000417	CLAY GRAVEL STREET DEPT	10/31/12	226815	2,300.00-
00001	JET CONSTRUCTION	1522	00127668	12000418	TOPSOIL STREET DEPT	10/31/12	226815	1,200.00-
JET CONSTRUCTION								
Sum								3,500.00-
00001	JOHNNY'S WRECKER SERVICE	20953	00128208	12000578	TOWING U#14407 SANIT	10/31/12	226816	250.00-
JOHNNY'S WRECKER SERVICE								
Sum								250.00-
00001	JORDAN, WILLIAM	TRAV ADVANCE	00128341	12000613	TRAV ADV WIND DESIGN WRKSHOP	10/31/12	226820	188.30-
00001	JORDAN, WILLIAM	TRAV ADVANCE	00128361	12000614	TRAV ADV BOAM SMNAR HERNANDO	10/31/12	226820	345.50-
JORDAN, WILLIAM								
Sum								533.80-
00001	KENTWOOD SPRINGWATER	298010	00128114	12000435	DRINKING WATER P/F ACADEMY	10/31/12	226822	20.20-
00001	KENTWOOD SPRINGWATER	313003	00128216	12000460	DRINKING WATER POLICE DEPT	10/31/12	226822	201.00-
KENTWOOD SPRINGWATER								
Sum								221.20-
00001	KONE INC (MONTGOMERY KON	221018635	00128049	12000367	MAINT 10/12-9/13 NORTH/SOUTH	10/31/12	226830	12,099.96-
KONE INC (MONTGOMERY KON								
Sum								12,099.96-
00001	LAMAR CTY CHANCERY CLERK	RECORDING FE	00128128	12000432	RECORDING FEES MUN CLERK	10/31/12	226832	22.00-
LAMARCTY CHANCERY CLERK								
Sum								22.00-
00001	LAMAR CTY SHERIFF	JAIL 8/12	00128047	12000376	JAIL EXPENSE 8/12	10/31/12	226833	2,100.00-
LAMARCTY SHERIFF								
Sum								2,100.00-
00001	LANCASTER'S MACHINE & WE	21006	00127990	12000622	REPRS U#11434 STREET	10/31/12	226834	1,442.00-
00001	LANCASTER'S MACHINE & WE	21008	00127991	12000623	REPRS U#9596 STREET	10/31/12	226834	118.00-
LANCASTER'S MACHINE & WE								
Sum								1,560.00-
00001	LAUREL MACHINE & FOUNDRY	435040	00128041	12000548	WELDING MATLS STREET SHOP	10/31/12	226836	730.04-

	Vendor	Invoice Number	Purchase Order	Claims Number	Item Description	Check Date	Check No.	Check Amount
LAURELMACHINE & FOUNDRY								
Sum								730.04-
00001	LEXISNEXIS MATTHEW BENDE	3792561X	00128407	12000683	2012 MS CODE COURT RULES	10/31/12	226839	48.89-
LEXISNEXIS MATTHEW BENDE								
Sum								48.89-
00001	LIBERTY FLAG & SPECIALTY	10120069	00127877	12000669	CHRISTMAS LIGHTS SUPP-CONSTR	10/31/12	226840	2,642.36-
LIBERTY FLAG & SPECIALTY								
Sum								2,642.36-
00001	LORMAN EDUCATION SERVICE	REG-HANSON 1	00128243	12000524	HANSON-1099 SMNAR-BATON ROUGE	10/31/12	226841	319.00-
LORMANEDUCATION SERVICE								
Sum								319.00-
00001	MARVIN'S INC	15241236-411	00127769	12000462	PORTLAND CEMENT STREET DEPT	10/31/12	226843	641.20-
MARVIN'S INC								
Sum								641.20-
00001	MAULDIN COMPANY	107844	00128143	12000621	REPR PTS U#15515 STREET	10/31/12	226844	576.47-
MAULDIN COMPANY								
Sum								576.47-
00001	MCCAIN UNIFORMS	230714-1	00124646	12000352	BOOTS-POLICE STOCK	10/31/12	226845	390.00-
00001	MCCAIN UNIFORMS	231314-1	00124646	12000353	BOOTS-POLICE STOCK	10/31/12	226845	78.00-
00001	MCCAIN UNIFORMS	238841-1	00124646	12000354	BOOTS-POLICE STOCK	10/31/12	226845	78.00-
00001	MCCAIN UNIFORMS	235275-1	00126262	12000355	BOOTS-POLICE STOCK	10/31/12	226845	156.00-
00001	MCCAIN UNIFORMS	238756-1	00126262	12000356	BOOTS-POLICE STOCK	10/31/12	226845	468.00-
00001	MCCAIN UNIFORMS	235561-1	00126289	12000357	BOOTS-MAILLETT-POLICE	10/31/12	226845	78.00-
00001	MCCAIN UNIFORMS	238843-1	00126289	12000358	BOOTS-MAILLETT-POLICE	10/31/12	226845	78.00-
00001	MCCAIN UNIFORMS	238448-1	00127721	12000448	UNIFORM BOOTS-SUMNER-POLICE	10/31/12	226845	78.00-
00001	MCCAIN UNIFORMS	239182-1	00127721	12000449	UNIFORM BOOTS-CLINE-POLICE	10/31/12	226845	78.00-
00001	MCCAIN UNIFORMS	239139-1	00127852	12000450	BDU TROUSERS-POLICE STOCK	10/31/12	226845	750.00-
MCCAINUNIFORMS								
Sum								2,232.00-
00001	MCELHANEY PLUMBING INC	199758	00128019	12000348	PLUMB SUPP 3RD FLR RESTROOM	10/31/12	226848	86.72-
00001	MCELHANEY PLUMBING INC	199678	00128003	12000390	PLUMB SUPP AIRPORT MAINT SHOP	10/31/12	226848	104.40-
00001	MCELHANEY PLUMBING INC	199887	00128101	12000442	PLUMB SUPP HILND CEMETERY	10/31/12	226848	95.83-
00001	MCELHANEY PLUMBING INC	200301	00128152	12000463	PLUMB SUPP P/WORKS WASH RACK	10/31/12	226848	66.60-
00001	MCELHANEY PLUMBING INC	200302	00128151	12000575	PLUMB SUPP-GENERATOR-TRAFFIC	10/31/12	226848	266.27-
00001	MCELHANEY PLUMBING INC	200184	00128220	12000576	PLUMB SUPP CONSTR DEPT	10/31/12	226848	53.80-
00001	MCELHANEY PLUMBING INC	201041	00128304	12000670	SPRAYER/HOSE-CONSTR STOCK	10/31/12	226848	104.75-
MCELHANEY PLUMBING INC								

	Vendor	Invoice Number	Purchase Order	Claims Number	Item Description	Check Date	Check No.	Check Amount
Sum								778.37-
00001	MCMULLAN EQUIPMENT CO	144173P	00128326	12000592	REPR PTS U#17358 POLICE	10/31/12	226849	138.80-
00001	MCMULLAN EQUIPMENT CO	339387	00128326	12000593	REPRS U#17358 POLICE	10/31/12	226849	380.50-
00001	MCMULLAN EQUIPMENT CO	144361-AP	00128326	12000594	REPR PTS U#17358 POLICE	10/31/12	226849	341.77-
MCMULLAN EQUIPMENT CO								
Sum								861.07-
00001	MID SOUTH GLASS INC	0038287	00128300	12000586	DOOR CLOSURE 2ND FLR C HALL	10/31/12	226852	60.00-
MID SOUTH GLASS INC								
Sum								60.00-
00001	MID SOUTH UNIFORM & SUPP	488573	00127702	12000685	UNIFORM SHIRTS/JACKET-VARI	10/31/12	226853	648.50-
00001	MID SOUTH UNIFORM & SUPP	488441	00127704	12000686	NAME TAGS-LATERALS/SHOES	10/31/12	226853	341.50-
00001	MID SOUTH UNIFORM & SUPP	488315	00127726	12000687	UNIFORM SHIRTS-WOOD-POLICE	10/31/12	226853	93.00-
00001	MID SOUTH UNIFORM & SUPP	488314	00127781	12000688	UNIFRM SHIRTS BRELAND/DILLARD	10/31/12	226853	186.00-
00001	MID SOUTH UNIFORM & SUPP	488317	00127968	12000689	UNIFRM SHIRTS FAIRLEY/VARNADO	10/31/12	226853	186.00-
00001	MID SOUTH UNIFORM & SUPP	488316	00128123	12000690	UNIFORM SHIRTS-PITTMAN-POLICE	10/31/12	226853	93.00-
MID SOUTH UNIFORM & SUPP								
Sum								1,548.00-
00001	MIKE'S TIRE & WHEEL CO	2163308	00127915	12000420	TIRES U#14768 STREET	10/31/12	226854	148.70-
00001	MIKE'S TIRE & WHEEL CO	2163363	00128025	12000438	TRACTOR TIRE U#15515 STREET	10/31/12	226854	248.39-
00001	MIKE'S TIRE & WHEEL CO	2162914	00127454	12000440	TIRE STEMS/LUBE SANIT SHOP	10/31/12	226854	75.06-
MIKE'STIRE & WHEEL CO								
Sum								472.15-
00001	MOORE'S BICYCLE SHOP INC	PO#128280 10	00128280	12000590	BIKE SEATS STRIKE TEAM	10/31/12	226859	119.97-
MOORE'S BICYCLE SHOP INC								
Sum								119.97-
00001	MOORE'S LOCK AND KEY LLC	12708	00127972	12000468	OPEN PINE ST PK GARAGE DOOR	10/31/12	226860	30.00-
00001	MOORE'S LOCK AND KEY LLC	12708(B)	00128218	12000469	ADDL AMT DUE PO#127972	10/31/12	226860	51.80-
MOORE'S LOCK AND KEY LLC								
Sum								81.80-
00001	MORGAN, C J INC	2012155	00128410	12000704	STORM DRAIN/SWR REPR WM CAREY	10/31/12	226861	49,125.64-
MORGAN, C J INC								
Sum								49,125.64-
00001	MS GRASS NURSERY	23854	00127876	12000392	GRASS SOD CEMETERY	10/31/12	226863	180.00-
00001	MS GRASS NURSERY	23855	00127876	12000393	GRASS SOD CEMETERY	10/31/12	226863	180.00-
00001	MS GRASS NURSERY	23856	00127876	12000394	GRASS SOD CEMETERY	10/31/12	226863	90.00-
00001	MS GRASS NURSERY	23857	00127971	12000419	GRASS SOD 511 REBECCA AVE	10/31/12	226863	360.00-
00001	MS GRASS NURSERY	23866	00128021	12000672	GRASS SOD CEMETERY GRAVES	10/31/12	226863	360.00-
00001	MS GRASS NURSERY	23893	00128021	12000673	GRASS SOD CEMETERY GRAVES	10/31/12	226863	90.00-

	Vendor	Invoice Number	Purchase Order	Claims Number	Item Description	Check Date	Check No.	Check Amount
MS GRASS NURSERY								
Sum								1,260.00-
00001	MS MUNICIPAL WORKERS' CO	4432	00128030	12000341	1ST INSTLMNT FY 10/12-9/13	10/31/12	226864	256,013.00-
MS MUNICIPAL WORKERS' CO								
Sum								256,013.00-
00001	MS POLICE SUPPLY CO INC	12120	00127748	12000414	DUTY GEAR POLICE STOCK	10/31/12	226865	566.75-
MS POLICE SUPPLY CO INC								
Sum								566.75-
00001	MS POWER COMPANY	10/12 GENERA	00020132	12000645	MNTHLY ELEC-GENERAL	10/31/12	226866	100,789.69-
MS POWER COMPANY								
Sum								100,789.69-
00001	MS STATE/SECRETARY OF ST	NOTARY FEE-U	00128458	12000681	NOTARY RNWL-UNDERWOOD-PURCH	10/31/12	226867	25.00-
MS STATE/SECRETARY OF ST								
Sum								25.00-
00001	MS STATE/TAX COMM/TAX EX	PO#128277 10	00128277	12000526	TAG U#17804 SERV CNTR TRUCK	10/31/12	226868	12.00-
MS STATE/TAX COMM/TAX EX								
Sum								12.00-
00001	MS STATE/TAX COMM/UNDERC	PO#128121 10	00128121	12000434	TAGS-UNDERCOVER UNITS-POLICE	10/31/12	226869	80.00-
MS STATE/TAX COMM/UNDERC								
Sum								80.00-
00001	N & H ELECTRONIC DISTRIB	106459	00128050	12000359	CABLE TIES-EVIDENCE COLLECT	10/31/12	226871	20.00-
00001	N & H ELECTRONIC DISTRIB	107034	00128246	12000691	CAMERA/PAGER BATTERIES	10/31/12	226871	233.28-
N & HELECTRONIC DISTRIB								
Sum								253.28-
00001	NAPA AUTO PARTS	477492	00127913	12000360	REPR PTS U#17708 POLICE	10/31/12	226874	338.50-
00001	NAPA AUTO PARTS	477493	00127913	12000361	REPR PTS U#10200 POLICE	10/31/12	226874	589.46-
00001	NAPA AUTO PARTS	477494	00127913	12000362	REPR PTS POLICE STOCK	10/31/12	226874	25.13-
00001	NAPA AUTO PARTS	477495	00127913	12000363	REPR PTS POLICE STOCK	10/31/12	226874	168.81-
00001	NAPA AUTO PARTS	477726	00128100	12000461	FIRE MECHANIC SUPPLIES	10/31/12	226874	4,035.42-
00001	NAPA AUTO PARTS	477739	00128103	12000573	CUTTING TORCH FIRE DEPT	10/31/12	226874	444.00-
00001	NAPA AUTO PARTS	478275	00128299	12000610	BATTERIES U#6946 FIRE DEPT	10/31/12	226874	364.64-
00001	NAPA AUTO PARTS	478431	00127618	12000653	REPR PTS POLICE STOCK	10/31/12	226874	95.80-
00001	NAPA AUTO PARTS	478432	00127618	12000654	REPR PTS POLICE STOCK	10/31/12	226874	28.02-
00001	NAPA AUTO PARTS	478433	00127618	12000655	REPR PTS U#14498 STREET	10/31/12	226874	133.26-
00001	NAPA AUTO PARTS	478448	00127660	12000656	REPR PTS POLICE STOCK	10/31/12	226874	52.32-
00001	NAPA AUTO PARTS	478449	00127660	12000657	REPR PTS U#10809 STREET	10/31/12	226874	6.69-
00001	NAPA AUTO PARTS	478450	00127660	12000658	REPR PTS SHOP STOCK	10/31/12	226874	35.85-

	Vendor	Invoice Number	Purchase Order	Claims Number	Item Description	Check Date	Check No.	Check Amount
00001	NAPA AUTO PARTS	478329	00128324	12000661	REPR PTS U#6946 FIRE DEPT	10/31/12	226874	209.24-
00001	NAPA AUTO PARTS	477671	00127914	12000667	REPR PTS U#11302 STREET	10/31/12	226874	358.57-
00001	NAPA AUTO PARTS	47716 CREDIT	00125880	12000678	CREDIT	10/31/12	226874	143.40
NAPA AUTO PARTS								
Sum								6,742.31-
00001	NEEL-SCHAFFER INC	01005200-99	00128429	12000700	SRVS 8/12 SLUDGE RMVL/PED PTH	10/31/12	226876	688.62-
NEEL-SCHAFFER INC								
Sum								688.62-
00001	NEWELL PAPER COMPANY	545933	00127851	12000379	TRASH BAGS STREET DEPT	10/31/12	226879	40.84-
00001	NEWELL PAPER COMPANY	546080	00127851	12000380	TRASH BAGS STREET DEPT	10/31/12	226879	775.96-
00001	NEWELL PAPER COMPANY	546820	00128090	12000569	JANIT SUPP TRAIN DEPOT	10/31/12	226879	421.92-
NEWELLPAPER COMPANY								
Sum								1,238.72-
00001	NORFOLK SOUTHERN CORP	90044531	00128054	12000397	11/12 LEASE RR ST PK LOT	10/31/12	226880	1,402.10-
NORFOLK SOUTHERN CORP								
Sum								1,402.10-
00001	OFFICE DEPOT INC	618595361001	00126050	12000398	OFFICE SUPP RISK MGMT	10/31/12	226883	191.45-
00001	OFFICE DEPOT INC	619596045001	00126050	12000399	CREDIT	10/31/12	226883	9.99
00001	OFFICE DEPOT INC	624316193001	00126050	12000400	CREDIT	10/31/12	226883	181.46
00001	OFFICE DEPOT INC	617853053001	00125892	12000401	PRINTER SUPP POLICE DEPT	10/31/12	226883	60.18-
00001	OFFICE DEPOT INC	624315362001	00125892	12000402	CREDIT	10/31/12	226883	60.18
00001	OFFICE DEPOT INC	626890950001	00127624	12000541	OFFICE SUPP LAND CODE DEV	10/31/12	226883	847.75-
00001	OFFICE DEPOT INC	626891666001	00127624	12000542	OFFICE SUPP LAND CODE DEV	10/31/12	226883	189.10-
00001	OFFICE DEPOT INC	626891667001	00127624	12000543	OFFICE SUPP LAND CODE DEV	10/31/12	226883	87.28-
00001	OFFICE DEPOT INC	626891668001	00127624	12000544	OFFICE SUPP LAND CODE DEV	10/31/12	226883	38.18-
00001	OFFICE DEPOT INC	628142232001	00127624	12000545	OFFICE SUPP LAND CODE DEV	10/31/12	226883	10.54-
00001	OFFICE DEPOT INC	628142467001	00127624	12000546	OFFICE SUPP LAND CODE DEV	10/31/12	226883	24.99-
00001	OFFICE DEPOT INC	1515545799	00128043	12000634	OFFICE SUPP/SOFTWARE-RECORDS	10/31/12	226883	635.97-
00001	OFFICE DEPOT INC	625410749001	00126986	12000636	PRINTER INK POLICE DEPT	10/31/12	226883	174.10-
00001	OFFICE DEPOT INC	1517479932	00128264	12000679	HEALTHY HOMETOWN POSTER	10/31/12	226883	29.99-
00001	OFFICE DEPOT INC	1517479950	00128266	12000680	SUPPLIES HEALTHY HOMETOWN	10/31/12	226883	30.32-
00001	OFFICE DEPOT INC	629108808001	00127624	12000708	OFFICE SUPP LAND CODE	10/31/12	226883	49.98-
00001	OFFICE DEPOT INC	629108809001	00127624	12000709	OFFICE SUPP LAND CODE	10/31/12	226883	13.33-
OFFICEDEPOT INC								
Sum								2,131.53-
00001	OLD RIVER TRUCK SALES IN	10222900003	00128110	12000467	REPRS U#14407 SANIT	10/31/12	226884	799.92-
OLD RIVER TRUCK SALES IN								
Sum								799.92-
00001	OSCEOLA MCCARTY YOUTH DE	SPONSORSHIP	00128179	12000514	SPONSORSHIP-COMMUNITY GARDEN	10/31/12	226885	1,000.00-

	Vendor	Invoice Number	Purchase Order	Claims Number	Item Description	Check Date	Check No.	Check Amount
OSCEOLA MCCARTY YOUTH DE								
Sum								1,000.00-
00001	OWENS BUSINESS MACHINES	242183	00127964	12000345	REPR COPIER HWY 98 SUB-STA	10/31/12	226886	99.00-
OWENSBUSINESS MACHINES								
Sum								99.00-
00001	PACE ROOFING	1484	00127710	12000372	ROOF REPR #1 FIRE STA	10/31/12	226887	2,800.00-
00001	PACE ROOFING	1487	00127856	12000436	ROOF REPRS #6,#8 FIRE STA	10/31/12	226887	2,100.00-
00001	PACE ROOFING	1489	00128102	12000612	ADDL AMT DUE PO#127856	10/31/12	226887	1,350.00-
PACE ROOFING								
Sum								6,250.00-
00001	PEANUTS TOWING SERVICE	61261	00128109	12000426	TOWING U#9169 AIRPORT	10/31/12	226891	75.00-
00001	PEANUTS TOWING SERVICE	61316	00128342	12000601	TOWING U#17572 POLICE	10/31/12	226891	65.00-
PEANUTS TOWING SERVICE								
Sum								140.00-
00001	PEARL RIVER VALLEY EPA (	10/12 GENERA	00020132	12000563	MNTHLY 10/12 PUBLIC SERVICES	10/31/12	226892	1,243.81-
PEARLRIVER VALLEY EPA (								
Sum								1,243.81-
00001	PEARSON VUE	REG-JORDAN 1	00128343	12000616	REG-JORDAN INSPECTOR TEST	10/31/12	226893	110.00-
PEARSON VUE								
Sum								110.00-
00001	PERFORMANCE TRAINING SYS	PO#127783 10	00127783	12000452	TESTBANK UPDATES-VARI OFFCRS	10/31/12	226894	1,962.00-
PERFORMANCE TRAINING SYS								
Sum								1,962.00-
00001	PINE BELT OIL COMPANY IN	1005665	00127853	12000339	GASOLINE PUBLIC WORKS	10/31/12	226897	15,053.30-
00001	PINE BELT OIL COMPANY IN	1006129	00127853	12000340	DIESEL PUBLIC WORKS	10/31/12	226897	15,629.80-
00001	PINE BELT OIL COMPANY IN	622359	00127875	12000391	MOTOR OIL CEM/FORESTRY	10/31/12	226897	604.40-
00001	PINE BELT OIL COMPANY IN	623464	00128113	12000511	GASOLINE PUBLIC WORKS	10/31/12	226897	20,041.25-
00001	PINE BELT OIL COMPANY IN	3520344	00128113	12000512	DIESEL PUBLIC WORKS	10/31/12	226897	15,623.23-
00001	PINE BELT OIL COMPANY IN	623563	00128174	12000560	GASOLINE,DIESEL CEM/FORESTRY	10/31/12	226897	3,186.86-
00001	PINE BELT OIL COMPANY IN	624130	00128272	12000647	GASOLINE,DIESEL PUBLIC WORKS	10/31/12	226897	24,673.32-
PINE BELT OIL COMPANY IN								
Sum								94,812.16-
00001	POLK DIRECTORIES	83470136 GEN	00128333	12000582	CITY DIRECTORIES VARI DEPTS	10/31/12	226900	855.00-
POLK DIRECTORIES								
Sum								855.00-
00001	PRESLEY, PAUL E	PETTY CASH 1	00128411	12000694	PETTY CASH FIRE DEPT	10/31/12	226902	123.22-

	Vendor	Invoice Number	Purchase Order	Claims Number	Item Description	Check Date	Check No.	Check Amount
PRESLEY, PAUL E								
Sum								123.22-
00001	PRO TRAVEL INC	AA/KGPKCQ DE	00128069	12000342	DELGADO 11/28-12/1 NLC BOSTON	10/31/12	226903	374.70-
PRO TRAVEL INC								
Sum								374.70-
00001	RELIABLE WELDING & MACH	38059	00126626	12000466	REPRS U#14618 STREET	10/31/12	226908	779.43-
RELIABLE WELDING & MACH								
Sum								779.43-
00001	RICOH CORP	1036356376	00127983	12000518	PRINTER SUPP INFO TECH	10/31/12	226909	366.48-
00001	RICOH CORP	1036366317	00127983	12000519	PRINTER SUPP INFO TECH	10/31/12	226909	1,143.64-
RICOHCORP								
Sum								1,510.12-
00001	RJ YOUNG COMPANY	298208	00128124	12000433	COPIER MAINT 9/12-9/13 C CLK	10/31/12	226910	2,988.00-
00001	RJ YOUNG COMPANY	301319	00128120	12000584	COPIER STAPLES MUN CLERK	10/31/12	226910	68.00-
00001	RJ YOUNG COMPANY	302371	00128423	12000692	COPIER MAINT 9/26-10/26 ACDMY	10/31/12	226910	350.44-
RJ YOUNG COMPANY								
Sum								3,406.44-
00001	ROBBINS TONY	EMT EXAM FEE	00128358	12000607	EMT EXAM FEE REIMB 7/10/12	10/31/12	226911	70.00-
ROBBINS TONY								
Sum								70.00-
00001	ROGERS, KEVIN & ASSOCIAT	OPINION-1215	00127889	12000416	TITLE OPINION 1215 DEWEY ST	10/31/12	226913	250.00-
ROGERS, KEVIN & ASSOCIAT								
Sum								250.00-
00001	SAUCIER, WILLIAM M	EMT EXAM FEE	00128359	12000608	EMT EXAM FEE REIMB 7/31/12	10/31/12	226916	70.00-
SAUCIER, WILLIAM M								
Sum								70.00-
00001	SHERRILL INC	INV-272896	00127948	12000427	HYD POLESAW HOLDER	10/31/12	226918	173.95-
SHERRILL INC								
Sum								173.95-
00001	SHERWIN-WILLIAMS COMPANY	3240-8	00128042	12000556	PAINT SUPP UNETTA ST GYM	10/31/12	226919	71.34-
00001	SHERWIN-WILLIAMS COMPANY	7581-9	00128245	12000697	TRAFFIC MARKING PAINT	10/31/12	226919	1,050.00-
SHERWIN-WILLIAMS COMPANY								
Sum								1,121.34-
00001	SHIPLEY'S DONUTS	498016 PO#12	00127942	12000515	DONUTS-FULL STEAM AHEAD MEET	10/31/12	226920	11.90-

	Vendor	Invoice Number	Purchase Order	Claims Number	Item Description	Check Date	Check No.	Check Amount
SHIPLEY'S DONUTS								
Sum								11.90-
00001	SHOWS DEARMAN & WAITS IN	17137	00128413	12000699	DESIGN SERV 35TH AVE DITCH	10/31/12	226923	1,450.00-
00001	SHOWS DEARMAN & WAITS IN	17151	00128415	12000701	SERVS 8/26-9/22 GORDON CREEK	10/31/12	226923	6,720.00-
SHOWSDEARMAN & WAITS IN								
Sum								8,170.00-
00001	SIGMA CONSULTING AND TRA	4806	00128276	12000550	CHEMICAL RESPONSE TRNG 11/14	10/31/12	226925	600.00-
SIGMACONSULTING AND TRA								
Sum								600.00-
00001	SOLAR SUPPLY INC	3436887	00124649	12000618	A/C SUPP PUBLIC WORKS DEPT	10/31/12	226932	40.17-
SOLARSUPPLY INC								
Sum								40.17-
00001	SOUTH MS HOUSING & DEVEL	DAMAGE DEP R	00201356	12000710	DAMAGE DEPOSIT REFUND	10/31/12	226933	100.00-
SOUTHMS HOUSING & DEVEL								
Sum								100.00-
00001	SOUTHEASTERN CONCRETE CO	7276	00128083	12000624	CONCRETE AIRPT DUMPSTER PAD	10/31/12	226934	247.50-
SOUTHEASTERN CONCRETE CO								
Sum								247.50-
00001	SOUTHERN DUPLICATING	1255	00128029	12000346	COPIER MNT 10/12-10/13 PURCH	10/31/12	226935	720.00-
SOUTHERN DUPLICATING								
Sum								720.00-
00001	SOUTHERN FINANCIAL SYSTE	CMCHAT 9/5/1	00201344	12000430	POLICE FINES COLL.FEE	10/31/12	226936	143.96-
00001	SOUTHERN FINANCIAL SYSTE	CMCHAT2 9/5/	00201345	12000431	POLICE FINES COLL.FEE	10/31/12	226936	782.81-
SOUTHERN FINANCIAL SYSTE								
Sum								926.77-
00001	SOUTHERN PINE ELECTRIC P	10/12 GENERA	00020132	12000562	MNTHLY 10/12 PUBLIC SERVICES	10/31/12	226937	63.12-
SOUTHERN PINE ELECTRIC P								
Sum								63.12-
00001	SOUTHERN PIPE & SUPPLY C	6030191-00	00127312	12000706	PLUMB SUPP U#15480 CONSTR	10/31/12	226938	67.51-
SOUTHERN PIPE & SUPPLY C								
Sum								67.51-
00001	SOUTHERN TIRE MART LLC	11067567	00127787	12000425	RECAP TIRES SANIT STOCK	10/31/12	226939	2,544.00-
00001	SOUTHERN TIRE MART LLC	11067706	00128038	12000574	TIRES STREET STOCK	10/31/12	226939	497.40-
00001	SOUTHERN TIRE MART LLC	11066604	00127182	12000671	RECAP TIRES/TIRE REPR-SANIT	10/31/12	226939	1,676.00-
00001	SOUTHERN TIRE MART LLC	11068116	00128315	12000698	TIRES STREET STOCK	10/31/12	226939	938.00-

	Vendor	Invoice Number	Purchase Order	Claims Number	Item Description	Check Date	Check No.	Check Amount
SOUTHERN TIRE MART LLC								
Sum								5,655.40-
00001	SOUTHERN TRACTOR (H'BURG	4457721	00128072	12000443	MOWER REPR PTS CEMETERY	10/31/12	226940	207.08-
SOUTHERN TRACTOR (H'BURG								
Sum								207.08-
00001	SPEEDY PRINTING & SIGNS	17282	00128027	12000446	SIGNS-COMM HEALTH DAY PROJECT	10/31/12	226942	490.00-
SPEEDYPRINTING & SIGNS								
Sum								490.00-
00001	SPEX FORENSICS	90404641	00127479	12000571	FINGERPRINT SYS BYRNE GRANT	10/31/12	226943	2,995.00-
00001	SPEX FORENSICS	90405612	00127479	12000572	FINGERPRINT SYS BYRNE GRANT	10/31/12	226943	26,614.00-
SPEX FORENSICS								
Sum								29,609.00-
00001	STANDARD OFFICE SUPPLY C	0028524-001	00127674	12000343	COPY PAPER MUN COURT	10/31/12	226945	600.00-
00001	STANDARD OFFICE SUPPLY C	0028787-001	00127211	12000344	STORAGE BOXES MUN COURT	10/31/12	226945	218.97-
00001	STANDARD OFFICE SUPPLY C	0028532-001	00127673	12000349	OFFICE SUPP POLICE DEPT	10/31/12	226945	33.40-
00001	STANDARD OFFICE SUPPLY C	0028545-001	00127703	12000350	FOLDERS-PATROL SECRETARY	10/31/12	226945	283.50-
00001	STANDARD OFFICE SUPPLY C	0028930-001	00128118	12000566	OFFICE SUPP TAX/MUN CLERK	10/31/12	226945	237.68-
00001	STANDARD OFFICE SUPPLY C	0029048-001	00127910	12000567	PRIV LICENSE/TAX RECEIPTS	10/31/12	226945	993.00-
00001	STANDARD OFFICE SUPPLY C	0029018-001	00128215	12000581	VARI SIZE BATTERIES M/ADM	10/31/12	226945	16.13-
00001	STANDARD OFFICE SUPPLY C	0028807-001	00128034	12000682	OFFICE SUPP L.I.F.E OF S MS	10/31/12	226945	467.68-
00001	STANDARD OFFICE SUPPLY C	0029187-001	00128349	12000714	OCCUPANCY CONTENT CARDS	10/31/12	226945	35.00-
STANDARD OFFICE SUPPLY C								
Sum								2,885.36-
00001	STRIBLING EQUIPMENT CO L	RS006011831:	00127631	12000549	REPRS U#11356 STREET	10/31/12	226946	1,809.52-
STRIBLING EQUIPMENT CO L								
Sum								1,809.52-
00001	TEMPLE INC	INV0115077	00127165	12000377	SIGNAL REPR SUPP TRAFF DEPT	10/31/12	226949	2,210.00-
00001	TEMPLE INC	INV0115838	00127165	12000378	SIGNAL REPR SUPP TRAFF DEPT	10/31/12	226949	2,780.00-
00001	TEMPLE INC	INV0116201	00127614	12000641	TRAFFIC SIGNAL BATTERIES	10/31/12	226949	1,240.00-
TEMPLEINC								
Sum								6,230.00-
00001	TREES & TRENDS	PO#128248 10	00128248	12000583	GIFT BASKET WRAPING SUPP	10/31/12	226956	66.44-
TREES& TRENDS								
Sum								66.44-
00001	TRUCK SERVICE & EQUIPMEN	309163	00128081	12000662	REPR PTS VARI FIRE UNITS	10/31/12	226959	361.48-
TRUCKSERVICE & EQUIPMEN								
Sum								361.48-

	Vendor	Invoice Number	Purchase Order	Claims Number	Item Description	Check Date	Check No.	Check Amount
00001	UNDERWOOD'S SMALL ENGINE	43176	00128223	12000536	LEAF BLOWER #6 FIRE STA	10/31/12	226962	351.99-
UNDERWOOD'S SMALL ENGINE								
Sum								351.99-
00001	UNITED PARCEL SERVICE IN	00008E1Y1541	00128251	12000527	SHIP CHGS 10/9/12 POLICE	10/31/12	226964	91.80-
UNITEDPARCEL SERVICE IN								
Sum								91.80-
00001	UPTON ADVERTISING INC	5562	00127326	12000633	DIRECTOR SHIRTS-BLAND-RISK MG	10/31/12	226965	217.00-
UPTONADVERTISING INC								
Sum								217.00-
00001	USM/CONTRACTS & GRANTS A	29423 01	00128360	12000617	JABG GRANT REIMB 9/12	10/31/12	226966	5,689.33-
USM/CONTRACTS & GRANTS A								
Sum								5,689.33-
00001	VAUGHN WILSON PHOTOGRAPH	PO#127871 10	00127871	12000366	PHOTOS HPD CAPTAINS ADM WALL	10/31/12	226969	150.00-
VAUGHNWILSON PHOTOGRAPH								
Sum								150.00-
00001	VETERINARY ASSOCIATES OF	8575 152866	00128048	12000351	DOG FOOD POLICE K-9	10/31/12	226972	78.80-
00001	VETERINARY ASSOCIATES OF	153061	00128217	12000459	DOG FOOD POLICE K-9	10/31/12	226972	501.00-
VETERINARY ASSOCIATES OF								
Sum								579.80-
00001	W D A M - TV	814047-2	00126818	12000611	FIRE RECRUIT TV ADS 9/1-10/11	10/31/12	226976	1,600.00-
W D AM - TV								
Sum								1,600.00-
00001	WAL-MART STORES INC	004560	00127941	12000510	SUPP-FULL STEAM AHEAD PROGRAM	10/31/12	226977	59.97-
WAL-MART STORES INC								
Sum								59.97-
00001	WASTE MANAGEMENT OF SOUT	0006028-2526	00128303	12000579	REFUSE DISPOSAL 10/1-15 SANIT	10/31/12	226982	3,355.88-
WASTEMANAGEMENT OF SOUT								
Sum								3,355.88-
00001	WASTE PRO HATTIESBURG	0000202250	00128013	12000389	HAUL CHGS RECYCLE PROGRAM	10/31/12	226983	5,250.00-
WASTEPRO HATTIESBURG								
Sum								5,250.00-
00001	WATERS INTERNATIONAL TRU	8-222830044	00127659	12000388	REPR PTS U#17729-SANIT	10/31/12	226984	35.02-
00001	WATERS INTERNATIONAL TRU	8-222910110	00128145	12000454	REPR PTS VARI STREET UNITS	10/31/12	226984	425.01-
00001	WATERS INTERNATIONAL TRU	8-222920037	00128088	12000540	REPR PTS FIRE DEPT STOCK	10/31/12	226984	319.55-
00001	WATERS INTERNATIONAL TRU	8-223030039	00128438	12000707	REPR PTS U#17729 SANIT	10/31/12	226984	467.46-

Vendor		Invoice Number	Purchase Order	Claims Number	Item Description	Check Date	Check No.	Check Amount
WATERSINTERNATIONAL TRU								
Sum								1,247.04-
00001	WILLMUT GAS & OIL COMPAN	10/12 GENERA	00020132	12000632	MNTHLY GAS-GENERAL	10/31/12	226985	410.37-
WILLMUT GAS & OIL COMPAN								
Sum								410.37-
00001	WINGFOOT COMMERCIAL TIRE	238-1026717	00127784	12000570	TIRES POLICE STOCK	10/31/12	226987	5,112.80-
WINGFOOT COMMERCIAL TIRE								
Sum								5,112.80-
00001	1ST SOURCE SERVALL	JC841642	00128170	12000577	A/C DRAIN SUPP CONSTR DEPT	10/31/12	226988	39.90-
1ST SOURCE SERVALL								
Sum								39.90-
Sum								1,795,338.65-

	Vendor	Invoice Number	Purchase Order	Claims Number	Item Description	Check Date	Check No.	Check Amount
PARKS& RECREATION FUND								
00002	A & R FARM AND GARDEN	225409	00128007	12000081	INSECTICIDE/HERBICIDE SUPP	10/31/12	226652	450.76-
A & RFARM AND GARDEN								
Sum								450.76-
00002	ALLEN, MATT	OFFICIAL 10/	00201354	12000159	OFFICIAL-ADULT SOFTBALL	10/31/12	226657	170.00-
ALLEN,MATT								
Sum								170.00-
00002	AMERICAN PRINTING & OFFI	1858	00128311	12000131	TATUM PARK PLAN COPIES	10/31/12	226660	115.00-
AMERICAN PRINTING & OFFI								
Sum								115.00-
00002	AUTO ARMATURE SERVICE IN	6404	00128395	12000144	BATTERY U#13989 GRNDS MAINT	10/31/12	226664	48.95-
AUTO ARMATURE SERVICE IN								
Sum								48.95-
00002	BASS CLEANERS	14355 PO#128	00128228	12000134	CLEAN TABLE CLOTHS/SKIRTS	10/31/12	226668	80.00-
BASS CLEANERS								
Sum								80.00-
00002	BELL, DEVON	OFFICIAL 10/	00201354	12000160	OFFICIAL-ADULT SOFTBALL	10/31/12	226673	119.00-
BELL,DEVON								
Sum								119.00-
00002	BETTS, SHERMAN	OFFICIAL 10/	00201354	12000161	OFFICIAL-ADULT SOFTBALL	10/31/12	226676	391.00-
BETTS,SHERMAN								
Sum								391.00-
00002	BOND, MARK	OFFICIAL 10/	00201354	12000162	OFFICIAL-ADULT SOFTBALL	10/31/12	226680	309.00-
BOND,MARK								
Sum								309.00-
00002	BRACKMAN MOWER WAREHOUSE	0115379	00127694	12000084	MOWER BLADES	10/31/12	226683	335.76-
00002	BRACKMAN MOWER WAREHOUSE	IN0115446	00127966	12000087	WEEDEATER REPR PTS	10/31/12	226683	181.71-
00002	BRACKMAN MOWER WAREHOUSE	0115560	00127755	12000100	REPRS U#16977 GRNDS MAINT	10/31/12	226683	445.59-
00002	BRACKMAN MOWER WAREHOUSE	IN0115607	00128141	12000113	REPRS VARI GRNDS MAINT UNITS	10/31/12	226683	914.46-
00002	BRACKMAN MOWER WAREHOUSE	0115608	00128167	12000122	WEEDEATER REPR PTS/SUPP	10/31/12	226683	115.60-
00002	BRACKMAN MOWER WAREHOUSE	0115672	00128192	12000128	REPR PTS U#16979 GRNDS MAINT	10/31/12	226683	226.09-
00002	BRACKMAN MOWER WAREHOUSE	IN0115695	00128225	12000129	PTS/REPRS U#16977,U#14528	10/31/12	226683	1,290.35-
00002	BRACKMAN MOWER WAREHOUSE	IN0115732	00128347	12000130	REPR PTS U#16979 GRNDS MAINT	10/31/12	226683	75.99-
00002	BRACKMAN MOWER WAREHOUSE	IN0115733	00128241	12000133	PTS/REPRS U#13890 GRNDS MAINT	10/31/12	226683	1,128.37-
BRACKMAN MOWER WAREHOUSE								
Sum								4,713.92-

	Vendor	Invoice Number	Purchase Order	Claims Number	Item Description	Check Date	Check No.	Check Amount
00002	BURKE, HOWARD	OFFICIAL 10/	00201354	12000163	OFFICIAL-ADULT SOFTBALL	10/31/12	226691	136.00-
BURKE,HOWARD								
Sum								136.00-
00002	C SPIRE WIRELESS (CELLUL	9/23/12-10/2	00201351	12000141	CELL SERV 9/12 PARKS & REC	10/31/12	226695	185.34-
C SPIRE WIRELESS (CELLUL								
Sum								185.34-
00002	CARTER, MICHAEL	OFFICIAL 10/	00201353	12000145	OFFICIAL-ADULT FLAG FTBALL	10/31/12	226698	70.00-
CARTER, MICHAEL								
Sum								70.00-
00002	CITY OF HATTIESBURG FUND	101712	00201343	12000088	TRF 10/19/12 PAYROLL	10/17/12	36048	60,693.77-
CITY OF HATTIESBURG FUND								
Sum								60,693.77-
00002	CLEMTS HARDWARE	104079	00127918	12000082	TIE DOWN STRAPS	10/31/12	226702	107.96-
00002	CLEMTS HARDWARE	104150	00128015	12000096	HAND TOOLS/SUPP-BALLFLD CREW	10/31/12	226702	936.80-
CLEMTSHARDWARE								
Sum								1,044.76-
00002	COOK, JOSH	OFFICIAL 10/	00201353	12000146	OFFICIAL-ADULT FLAG FTBALL	10/31/12	226707	300.00-
COOK,JOSH								
Sum								300.00-
00002	COPY CATS PRINTING	310631	00128146	12000103	REIMB PACKETS MDOT YTH CORP	10/31/12	226708	36.18-
COPY CATS PRINTING								
Sum								36.18-
00002	COURTESY MOTORS INC	389337	00128001	12000086	REPR PTS U#11961	10/31/12	226709	61.03-
00002	COURTESY MOTORS INC	389437	00128044	12000098	ADDL PTS U#11961 PO#128001	10/31/12	226709	54.66-
COURTESY MOTORS INC								
Sum								115.69-
00002	CURTIS, GEORGE	SPORTS SERVS	00201355	12000181	SPORTS SUPPORT SERVICES	10/31/12	226713	133.00-
CURTIS, GEORGE								
Sum								133.00-
00002	CURTIS, MALCOLM	OFFICIAL 10/	00201354	12000164	OFFICIAL-ADULT SOFTBALL	10/31/12	226714	153.00-
CURTIS, MALCOLM								
Sum								153.00-
00002	DIXON, TIMOTHY	OFFICIAL 10/	00201354	12000165	OFFICIAL-ADULT SOFTBALL	10/31/12	226726	408.00-
DIXON,TIMOTHY								

	Vendor	Invoice Number	Purchase Order	Claims Number	Item Description	Check Date	Check No.	Check Amount
Sum								408.00-
00002	DOLEAC ELECTRIC CO INC	H13303	00128214	12000132	TRANSFORMER REPR TATUM PARK	10/31/12	226727	3,520.44-
DOLEACELECTRIC CO INC								
Sum								3,520.44-
00002	DUNAGIN PEST CONTROL(PRE	8616812	00128293	12000118	SENTRICON-S ANTONIO RESTROOM	10/31/12	226730	75.00-
DUNAGIN PEST CONTROL(PRE								
Sum								75.00-
00002	DUNMORE, JOHNATHAN	SPORTS SERVS	00201355	12000182	SPORTS SUPPORT SERVICES	10/31/12	226732	175.00-
DUNMORE, JOHNATHAN								
Sum								175.00-
00002	EASTERLING, ISAIAH (POLL	OFFICIAL 10/	00201354	12000166	OFFICIAL-ADULT SOFTBALL	10/31/12	226733	153.00-
EASTERLING, ISAIAH (POLL								
Sum								153.00-
00002	ECONOMY SUPPLY CO	179098	00127869	12000115	LIGHT POLE EASTSIDE PARK	10/31/12	226736	126.80-
ECONOMY SUPPLY CO								
Sum								126.80-
00002	ELKINS WHOLESALE INC	155166-00	00127969	12000080	JANIT SUPP GRNDS MAINT	10/31/12	226737	305.83-
00002	ELKINS WHOLESALE INC	155798-00	00128134	12000110	JANIT SUPP GRNDS MAINT	10/31/12	226737	431.81-
00002	ELKINS WHOLESALE INC	156486-00	00128338	12000126	JANIT SUPP GRNDS MAINT	10/31/12	226737	391.76-
00002	ELKINS WHOLESALE INC	155933-00	00128168	12000197	DEGREASER GRNDS MAINT	10/31/12	226737	74.22-
ELKINSWHOLESALE INC								
Sum								1,203.62-
00002	ESTERS, WILLARD (BUTCH)	OFFICIAL 10/	00201354	12000167	OFFICIAL-ADULT SOFTBALL	10/31/12	226742	187.00-
ESTERS, WILLARD (BUTCH)								
Sum								187.00-
00002	FAIRLEY, WILLIAM (VASTON	SPORTS SERVS	00201355	12000183	SPORTS SUPPORT SERVICES	10/31/12	226746	300.00-
FAIRLEY, WILLIAM (VASTON								
Sum								300.00-
00002	FERGUSON ENTERPRISES INC	1157565	00128055	12000097	PLUMB SUPP TATUM PARK	10/31/12	226749	185.28-
FERGUSON ENTERPRISES INC								
Sum								185.28-
00002	G & K SERVICES	1035311222	00128386	12000135	MATS 9/25 GRNDS MAINT	10/31/12	226768	3.50-
00002	G & K SERVICES	1035313277	00128386	12000136	MATS 10/02 GRNDS MAINT	10/31/12	226768	3.50-
00002	G & K SERVICES	1035315350	00128386	12000137	MATS 10/09 GRNDS MAINT	10/31/12	226768	3.50-
00002	G & K SERVICES	1035311791	00128386	12000138	MATS 10/16 GRNDS MAINT	10/31/12	226768	3.50-
00002	G & K SERVICES	1035319451	00128386	12000139	MATS 10/23 GRNDS MAINT	10/31/12	226768	3.50-

Vendor		Invoice Number	Purchase Order	Claims Number	Item Description	Check Date	Check No.	Check Amount
G & KSERVICES								
Sum								17.50-
00002	GILKEY ELECTRIC SUPPLY C	238360	00127634	12000109	ELEC SUPP TATUM TENNIS LIGHTS	10/31/12	226772	200.00-
GILKEYELECTRIC SUPPLY C								
Sum								200.00-
00002	GRIFFIN, GABRIEL	OFFICIAL 10/	00201353	12000147	OFFICIAL-ADULT FLAG FTBALL	10/31/12	226779	70.00-
GRIFFIN, GABRIEL								
Sum								70.00-
00002	GUIN, JEREMY	OFFICIAL 10/	00201353	12000148	OFFICIAL-ADULT FLAG FTBALL	10/31/12	226782	70.00-
GUIN,JEREMY								
Sum								70.00-
00002	H'BURG COCA COLA BOTTLIN	56M00917631	00128229	12000127	DRINKS AMNESTY DAY 10/27	10/31/12	226784	141.00-
H'BURGCOCA COLA BOTTLIN								
Sum								141.00-
00002	HARDEN, SEAN	OFFICIAL 10/	00201354	12000168	OFFICIAL-ADULT SOFTBALL	10/31/12	226790	408.00-
HARDEN, SEAN								
Sum								408.00-
00002	HARRIS, DRE	SPORTS SERVS	00201355	12000184	SPORTS SUPPORT SERVICES	10/31/12	226791	98.00-
HARRIS, DRE								
Sum								98.00-
00002	HOOKER, CONNELLA	OFFICIAL 10/	00201353	12000149	OFFICIAL-ADULT FLAG FTBALL	10/31/12	226797	80.00-
HOOKER, CONNELLA								
Sum								80.00-
00002	HOSKINS, JAZAMINE	SPORTS SERVS	00201355	12000185	SPORTS SUPPORT SERVICES	10/31/12	226798	168.00-
HOSKINS, JAZAMINE								
Sum								168.00-
00002	INDOFF INC	2166447	00127920	12000106	CHAIR MATS REC CNTR	10/31/12	226807	143.97-
00002	INDOFF INC	2166451	00127911	12000107	OFFICE SUPPLIES GRNDS MAINT	10/31/12	226807	696.87-
INDOFFINC								
Sum								840.84-
00002	IRBY, STUART C CO	S007043736.0	00128116	12000142	ELEC SUPP-LIGHTS-TATUM SOCCER	10/31/12	226812	550.39-
00002	IRBY, STUART C CO	S007098639.0	00128155	12000143	ELEC SUPP-LIGHTS-WALK TRAILS	10/31/12	226812	202.60-
IRBY,STUART C CO								
Sum								752.99-

Vendor		Invoice Number	Purchase Order	Claims Number	Item Description	Check Date	Check No.	Check Amount
00002	JACKSON, CORY	OFFICIAL 10/	00201353	12000150	OFFICIAL-ADULT FLAG FTBALL	10/31/12	226813	70.00-
JACKSON, CORY								
Sum								70.00-
00002	JET CONSTRUCTION	1529	00128077	12000108	MASON SAND TOPDRESS TATUM PK	10/31/12	226815	1,650.00-
JET CONSTRUCTION								
Sum								1,650.00-
00002	JONES, ANN	PETTY CASH 1	00128398	12000196	PETTY CASH GRNDS MAINT	10/31/12	226817	293.82-
JONES,ANN								
Sum								293.82-
00002	JORDAN, SARDE	SPORTS SERVS	00201355	12000186	SPORTS SUPPORT SERVICES	10/31/12	226819	77.00-
JORDAN, SARDE								
Sum								77.00-
00002	KEITH, COREY	OFFICIAL 10/	00201354	12000169	OFFICIAL-ADULT SOFTBALL	10/31/12	226821	102.00-
KEITH,COREY								
Sum								102.00-
00002	KETTLEY, VERONICA	SPORTS SERVS	00201355	12000187	SPORTS SUPPORT SERVICES	10/31/12	226823	49.00-
KETTLEY, VERONICA								
Sum								49.00-
00002	KEYS, MECHEKA	SPORTS SERVS	00201355	12000188	SPORTS SUPPORT SERVICES	10/31/12	226824	168.00-
KEYS,MECHEKA								
Sum								168.00-
00002	KEYS, TRAVIS	OFFICIAL 10/	00201353	12000151	OFFICIAL-ADULT FLAG FTBALL	10/31/12	226825	40.00-
KEYS,TRAVIS								
Sum								40.00-
00002	KIRKSEY, JOHNATHAN	OFFICIAL 10/	00201354	12000170	OFFICIAL-ADULT SOFTBALL	10/31/12	226827	204.00-
KIRKSEY, JOHNATHAN								
Sum								204.00-
00002	KIRKSEY, NANCY JONES	SPORTS SERVS	00201355	12000189	SPORTS SUPPORT SERVICES	10/31/12	226828	300.00-
KIRKSEY, NANCY JONES								
Sum								300.00-
00002	LANGHAM, PAUL	OFFICIAL 10/	00201353	12000152	OFFICIAL-ADULT FLAG FTBALL	10/31/12	226835	75.00-
LANGHAM, PAUL								
Sum								75.00-
00002	LEE, REGINALD	OFFICIAL 10/	00201354	12000171	OFFICIAL-ADULT SOFTBALL	10/31/12	226837	187.00-

Vendor		Invoice Number	Purchase Order	Claims Number	Item Description	Check Date	Check No.	Check Amount
LEE, REGINALD								
Sum								187.00-
00002	LOWE, JAMES A	OFFICIAL 10/	00201353	12000153	OFFICIAL-ADULT FLAG FTBALL	10/31/12	226842	60.00-
LOWE,JAMES A								
Sum								60.00-
00002	MCNAIR, EVELENE	OFFICIAL 10/	00201354	12000172	OFFICIAL-ADULT SOFTBALL	10/31/12	226850	153.00-
MCNAIR, EVELENE								
Sum								153.00-
00002	MCSWAIN, ZA'TARRA	OFFICIAL 10/	00201353	12000154	OFFICIAL-ADULT FLAG FTBALL	10/31/12	226851	80.00-
MCSWAIN, ZA'TARRA								
Sum								80.00-
00002	MID SOUTH GLASS INC	0038227	00127868	12000104	WINDOW REPR POLICE SUB-STA	10/31/12	226852	135.00-
MID SOUTH GLASS INC								
Sum								135.00-
00002	MIKE'S TIRE & WHEEL CO	2163315	00127924	12000101	TIRE TUBE U#17561	10/31/12	226854	18.66-
00002	MIKE'S TIRE & WHEEL CO	2163427	00128087	12000102	TIRE REPR U#16979	10/31/12	226854	29.16-
00002	MIKE'S TIRE & WHEEL CO	2163637	00128380	12000199	TIRE REPR VARI UNITS	10/31/12	226854	39.66-
MIKE'STIRE & WHEEL CO								
Sum								87.48-
00002	MINGO, DEMYRON MANDELA	OFFICIAL 10/	00201354	12000195	OFFICIAL-ADULT SOFTBALL	10/31/12	226856	211.00-
MINGO,DEMYRON MANDELA								
Sum								211.00-
00002	MS GRASS NURSERY	23873	00128079	12000111	RPLCMNT SOD CITY HALL L/SCAPE	10/31/12	226863	90.00-
MS GRASS NURSERY								
Sum								90.00-
00002	MS POWER COMPANY	10/12 PKS/RE	00020132	12000140	MNTHLY ELEC-PARKS & REC	10/31/12	226866	11,479.65-
MS POWER COMPANY								
Sum								11,479.65-
00002	MYERS, JAMES	OFFICIAL 10/	00201354	12000174	OFFICIAL-ADULT SOFTBALL	10/31/12	226870	119.00-
MYERS,JAMES								
Sum								119.00-
00002	NAPA AUTO PARTS	477439	00127965	12000095	LUBRICANTS GRNDS MAINT UNITS	10/31/12	226874	670.08-
00002	NAPA AUTO PARTS	477602	00128045	12000099	REPR PTS U#6111	10/31/12	226874	28.78-
00002	NAPA AUTO PARTS	477876	00128138	12000119	BRAKE REPR PTS U#8667	10/31/12	226874	48.46-
00002	NAPA AUTO PARTS	478020	00128193	12000120	BRAKE REPR PTS U#8667	10/31/12	226874	27.70-

	Vendor	Invoice Number	Purchase Order	Claims Number	Item Description	Check Date	Check No.	Check Amount
00002	NAPA AUTO PARTS	478051	00128258	12000121	BRAKE REPR PTS U#8667	10/31/12	226874	105.85-
NAPA AUTO PARTS								
Sum								880.87-
00002	PATE, JERRY TURF & IRRIG	I1623929	00128012	12000090	SAND PRO RAKE REPR PTS	10/31/12	226888	234.90-
00002	PATE, JERRY TURF & IRRIG	I1623929(B)	00128065	12000091	ADDL AMT DUE PO#128012	10/31/12	226888	12.68-
PATE,JERRY TURF & IRRIG								
Sum								247.58-
00002	PEANUTS TOWING SERVICE	61260	00128032	12000092	TOWING U#6111	10/31/12	226891	75.00-
PEANUTS TOWING SERVICE								
Sum								75.00-
00002	PETERSON, SHAMAR	OFFICIAL 10/	00201353	12000156	OFFICIAL-ADULT FLAG FTBALL	10/31/12	226895	70.00-
PETERSON, SHAMAR								
Sum								70.00-
00002	PIONEER MANUFACTURING CO	INV461612	00127854	12000083	BALLFIELD MARKING PAINT	10/31/12	226898	3,108.00-
00002	PIONEER MANUFACTURING CO	INV461282	00127812	12000085	PAINT STRIPER REPR PTS	10/31/12	226898	650.30-
00002	PIONEER MANUFACTURING CO	INV462635	00128112	12000116	PAINT STRIPER REPR PTS	10/31/12	226898	348.10-
PIONEER MANUFACTURING CO								
Sum								4,106.40-
00002	PLAY IT AGAIN SPORTS	PO#127640 10	00127640	12000117	T SHIRTS YTH/LERS FOOT	10/31/12	226899	1,432.68-
PLAY IT AGAIN SPORTS								
Sum								1,432.68-
00002	POWELL, RANDY	SPORTS SERVS	00201355	12000190	SPORTS SUPPORT SERVICES	10/31/12	226901	224.00-
POWELL, RANDY								
Sum								224.00-
00002	ROBERTS, JAMES	OFFICIAL 10/	00201354	12000175	OFFICIAL-ADULT SOFTBALL	10/31/12	226912	68.00-
ROBERTS, JAMES								
Sum								68.00-
00002	RYALS, ARRON	OFFICIAL 10/	00201353	12000157	OFFICIAL-ADULT FLAG FTBALL	10/31/12	226914	40.00-
RYALS,ARRON								
Sum								40.00-
00002	SHERWIN-WILLIAMS COMPANY	7094-3	00127846	12000089	BALLFIELD MARKING PAINT	10/31/12	226919	690.00-
00002	SHERWIN-WILLIAMS COMPANY	2962-8	00127846	12000093	CREDIT	10/31/12	226919	690.00
00002	SHERWIN-WILLIAMS COMPANY	2963-6	00127846	12000094	BALLFIELD MARKING PAINT	10/31/12	226919	690.00-
00002	SHERWIN-WILLIAMS COMPANY	7627-0	00128310	12000198	TOUCHUP PAINT 9TH ST	10/31/12	226919	35.67-
SHERWIN-WILLIAMS COMPANY								

	Vendor	Invoice Number	Purchase Order	Claims Number	Item Description	Check Date	Check No.	Check Amount
Sum								725.67-
00002	SHOULTZ, PATRICK TODD	OFFICIAL 10/	00201354	12000176	OFFICIAL-ADULT SOFTBALL	10/31/12	226922	357.00-
SHOULTZ, PATRICK TODD								
Sum								357.00-
00002	SIGNS FIRST	H-38927	00128076	12000123	ALLIGATOR CAUTION SIGNS	10/31/12	226926	85.32-
SIGNSFIRST								
Sum								85.32-
00002	SIMPSON, LYNN	OFFICIAL 10/	00201354	12000177	OFFICIAL-ADULT SOFTBALL	10/31/12	226928	255.00-
SIMPSON, LYNN								
Sum								255.00-
00002	SIMPSON, NELDA	SPORTS SERVS	00201355	12000191	SPORTS SUPPORT SERVICES	10/31/12	226929	63.00-
SIMPSON, NELDA								
Sum								63.00-
00002	SMITH, PRESTON	OFFICIAL 10/	00201353	12000155	OFFICIAL-ADULT FLAG FTBALL	10/31/12	226930	40.00-
SMITH,PRESTON								
Sum								40.00-
00002	SMITH, THOMAS III	OFFICIAL 10/	00201353	12000158	OFFICIAL-ADULT FLAG FTBALL	10/31/12	226931	30.00-
SMITH,THOMAS III								
Sum								30.00-
00002	SOUTHERN TRACTOR (H'BURG	455658	00128115	12000114	REPRS U#8644 GRNDS MAINT	10/31/12	226940	297.78-
SOUTHERN TRACTOR (H'BURG								
Sum								297.78-
00002	TROTTER, COREY	OFFICIAL 10/	00201354	12000178	OFFICIAL-ADULT SOFTBALL	10/31/12	226957	153.00-
TROTTER, COREY								
Sum								153.00-
00002	TROTTER, WILLIE	OFFICIAL 10/	00201354	12000179	OFFICIAL-ADULT SOFTBALL	10/31/12	226958	391.00-
TROTTER, WILLIE								
Sum								391.00-
00002	TRUSSELL, JAY	OFFICIAL 10/	00201354	12000180	OFFICIAL-ADULT SOFTBALL	10/31/12	226960	34.00-
TRUSSELL, JAY								
Sum								34.00-
00002	UNITED FENCE COMPANY	00014982	00128104	12000105	BONHOMIE ROAD FENCE TATUM PK	10/31/12	226963	455.00-
UNITEDFENCE COMPANY								
Sum								455.00-

	Vendor	Invoice Number	Purchase Order	Claims Number	Item Description	Check Date	Check No.	Check Amount
00002	VARNADO, ALEXZANDRIA	SPORTS SERVS	00201355	12000192	SPORTS SUPPORT SERVICES	10/31/12	226967	161.00-
VARNADO, ALEXZANDRIA Sum								161.00-
00002	VARNADO, UNDRA	SPORTS SERVS	00201355	12000193	SPORTS SUPPORT SERVICES	10/31/12	226968	210.00-
VARNADO, UNDRA Sum								210.00-
00002	VESELY'S NURSERY	PO#127752 10	00127752	12000112	PLANTS USM HOMECOMING DECOR	10/31/12	226971	480.00-
VESELY'S NURSERY Sum								480.00-
00002	VINCENT, KELVIN JR	SPORTS SERVS	00201355	12000194	SPORTS SUPPORT SERVICES	10/31/12	226974	225.00-
VINCENT, KELVIN JR Sum								225.00-
00002	WILLMUT GAS & OIL COMPAN	10/12 PKS/RE	00020132	12000124	MNTHLY GAS-PARKS & REC	10/31/12	226985	13.05-
WILLMUT GAS & OIL COMPAN Sum								13.05-
Sum								105,197.14-

Vendor		Invoice Number	Purchase Order	Claims Number	Item Description	Check Date	Check No.	Check Amount
HATT.MUNICIPAL FIRE PROTECTION								
00005	MOTOROLA INC (EPL RADIOS	41171889	00125386	12000003	RADIO EQUIPMENT	10/31/12	226862	6,727.51-
MOTOROLA INC (EPL RADIOS								
Sum								6,727.51-
Sum								6,727.51-

Vendor		Invoice Number	Purchase Order	Claims Number	Item Description	Check Date	Check No.	Check Amount
PAYROLL FUND								
00006	AUTOMATED COLLECTION SER	5257	00201320	12000021	GARNISHMENT	10/22/12	17019	75.63-
AUTOMATED COLLECTION SER								
Sum								75.63-
00006	CHECK NOW INC (GARN)	3492	00201320	12000024	GARNISHMENT	10/22/12	17022	99.18-
CHECKNOW INC (GARN)								
Sum								99.18-
00006	CHILD SUPPORT ENFORCEMEN	3871	00201322	12000051	CHILD SUPPORT	10/22/12	17049	200.00-
00006	CHILD SUPPORT ENFORCEMEN	3601	00201322	12000050	CHILD SUPPORT	10/22/12	17048	465.36-
CHILDSUPPORT ENFORCEMEN								
Sum								665.36-
00006	CONVILLE & CONVILLE PLLC	5838	00201320	12000012	GARNISHMENT	10/22/12	17010	174.82-
CONVILLE & CONVILLE PLLC								
Sum								174.82-
00006	COUCH CONVILLE AND BLITT	3768	00201320	12000015	GARNISHMENT	10/22/12	17013	43.58-
COUCHCONVILLE AND BLITT								
Sum								43.58-
00006	CREDIT BUREAU CENTRAL	8564	00201320	12000056	GARNISHMENT	10/22/12	17020	314.34-
CREDITBUREAU CENTRAL								
Sum								314.34-
00006	FAMILY SUPPORT PAYMENT C	9865	00201322	12000054	CHILD SUPPORT	10/22/12	17052	700.00-
FAMILYSUPPORT PAYMENT C								
Sum								700.00-
00006	FIRST FRANKLIN FINANCIAL	9509	00201320	12000016	GARNISHMENT	10/22/12	17014	315.34-
FIRSTFRANKLIN FINANCIAL								
Sum								315.34-
00006	FIRST TOWER LOAN (GARN	10/22/12	00201320	12000029	GARNISHMENT	10/22/12	17027	652.05-
FIRSTTOWER LOAN (GARN								
Sum								652.05-
00006	FORREST CTY CHANCERY COU	10/22/12	00201321	12000059	CHILD SUPPORT	10/22/12	17056	1,292.00-
FORREST CTY CHANCERY COU								
Sum								1,292.00-
00006	FORREST CTY CIRCUIT COUR	8772	00201320	12000033	GARNISHMENT	10/22/12	17031	208.76-
FORREST CTY CIRCUIT COUR								

	Vendor	Invoice Number	Purchase Order	Claims Number	Item Description	Check Date	Check No.	Check Amount
Sum								208.76-
00006	GREAT LAKES HIGHER EDUCA	1583	00201320	12000019	GARNISHMENT	10/22/12	17017	176.88-
GREATLAKES HIGHER EDUCA								
Sum								176.88-
00006	HENLEY, LOTTERHOS & HENL	10/22/12	00201320	12000013	GARNISHMENT	10/22/12	17011	1,133.17-
HENLEY, LOTTERHOS & HENL								
Sum								1,133.17-
00006	INTERNAL REVENUE SERVICE	9270	00201315	12000041	GARNISHMENT	10/22/12	17039	70.00-
00006	INTERNAL REVENUE SERVICE	0931	00201315	12000044	GARNISHMENT	10/22/12	17042	85.00-
00006	INTERNAL REVENUE SERVICE	0597	00201315	12000045	GARNISHMENT	10/22/12	17043	105.00-
00006	INTERNAL REVENUE SERVICE	2081	00201315	12000046	GARNISHMENT	10/22/12	17044	100.00-
00006	INTERNAL REVENUE SERVICE	9245	00201315	12000047	GARNISHMENT	10/22/12	17045	50.00-
00006	INTERNAL REVENUE SERVICE	0874	00201315	12000043	GARNISHMENT	10/22/12	17041	100.00-
INTERNAL REVENUE SERVICE								
Sum								510.00-
00006	INTERNAL REVENUE SERVICE	9998	00201315	12000037	GARNISHMENT	10/22/12	17035	50.00-
00006	INTERNAL REVENUE SERVICE	2259	00201315	12000038	GARNISHMENT	10/22/12	17036	50.00-
00006	INTERNAL REVENUE SERVICE	2753	00201315	12000039	GARNISHMENT	10/22/12	17037	100.00-
00006	INTERNAL REVENUE SERVICE	0579	00201315	12000040	GARNISHMENT	10/22/12	17038	100.00-
00006	INTERNAL REVENUE SERVICE	6062	00201315	12000042	GARNISHMENT	10/22/12	17040	100.00-
INTERNAL REVENUE SERVICE								
Sum								400.00-
00006	JOHN R REEVES PC (CHILD	6467	00201320	12000014	GARNISHMENT	10/22/12	17012	555.88-
00006	JOHN R REEVES PC (CHILD	6467	00201322	12000052	CHILD SUPPORT	10/22/12	17050	150.00-
JOHN RREEVES PC (CHILD								
Sum								705.88-
00006	LAMAR CTY CHANCERY CLERK	0935	00201322	12000049	CHILD SUPPORT	10/22/12	17047	540.00-
LAMARCTY CHANCERY CLERK								
Sum								540.00-
00006	MARENGO COUNTY CIRCUIT C	8965	00201320	12000027	GARNISHMENT	10/22/12	17025	8.10-
MARENGO COUNTY CIRCUIT C								
Sum								8.10-
00006	MENDELSON LAW FIRM (GARN	1075	00201320	12000030	GARNISHMENT	10/22/12	17028	349.61-
MENDELSON LAW FIRM (GARN								
Sum								349.61-
00006	MILLER, AMY 1206	10/22/12	00201320	12000031	GARNISHMENT	10/22/12	17029	254.77-

Vendor		Invoice Number	Purchase Order	Claims Number	Item Description	Check Date	Check No.	Check Amount
MILLER, AMY 1206								
Sum								254.77-
00006	NEBRASKA CHILD SUPPORT (	4840	00201322	12000055	CHILD SUPPORT	10/22/12	17053	676.08-
NEBRASKA CHILD SUPPORT (								
Sum								676.08-
00006	RAMEY'S INC (GARN)	9747	00201320	12000032	GARNISHMENT	10/22/12	17030	424.28-
RAMEY'S INC (GARN)								
Sum								424.28-
00006	REPUBLIC FINANCE INC (G	3629	00201320	12000034	GARNISHMENT	10/22/12	17032	54.60-
REPUBLIC FINANCE INC (G								
Sum								54.60-
00006	STEVEN D SLADE (GARN)	0474	00201320	12000025	GARNISHMENT	10/22/12	17023	448.54-
STEVEND SLADE (GARN)								
Sum								448.54-
00006	STOKES & CLINTON PC (GAR	10/22/12	00201320	12000035	GARNISHMENT	10/22/12	17033	743.85-
STOKES& CLINTON PC (GAR								
Sum								743.85-
00006	TEXAS CHILD SUPPORT SOU	6226	00201322	12000053	CHILD SUPPORT	10/22/12	17051	500.00-
TEXASCHILD SUPPORT SOU								
Sum								500.00-
00006	TRANSAMERICA LIFE	10/22/12	00201324	12000062	BURIAL INSURANCE PREM 10/12	10/22/12	17059	342.96-
TRANSAMERICA LIFE								
Sum								342.96-
00006	U S DEPT OF TREASURY (GA	9574	00201320	12000018	GARNISHMENT	10/22/12	17016	164.42-
U S DEPT OF TREASURY (GA								
Sum								164.42-
00006	UNITED CREDIT CORP (GARN	9891	00201320	12000036	GARNISHMENT	10/22/12	17034	148.50-
UNITEDCREDIT CORP (GARN								
Sum								148.50-
00006	UNITED HEALTHCARE INS CO	10/25/12	00201325	12000067	PREMIUM DUE 11/2012 COVERAGE	10/25/12	17064	3,540.74-
UNITEDHEALTHCARE INS CO								
Sum								3,540.74-
00006	WINN BROWN LAW FIRM,THE	1425	00201320	12000028	GARNISHMENT	10/22/12	17026	291.82-
WINN BROWN LAW FIRM,THE								

	Vendor	Invoice Number	Purchase Order	Claims Number	Item Description	Check Date	Check No.	Check Amount
Sum								291.82-
Sum								15,955.26-

Vendor		Invoice Number	Purchase Order	Claims Number	Item Description	Check Date	Check No.	Check Amount
WATER& SEWER OPERATION/MAINT.								
00009	ADVANCE AUTO PARTS	560422578627	00127311	12000120	REPR PTS U#12605 PLANT	10/31/12	226654	185.86-
ADVANCE AUTO PARTS								
Sum								185.86-
00009	ARNOLD LINE WATER ASSN I	243272	00128297	12000102	SEWER BILLING 7/12-9/12	10/31/12	226662	405.00-
ARNOLDLINE WATER ASSN I								
Sum								405.00-
00009	BLOSSMAN GAS INC	311473	00128268	12000107	PROPANE PLANT FORKLIFT	10/31/12	226677	26.00-
BLOSSMAN GAS INC								
Sum								26.00-
00009	BONNER ANALYTICAL TESTIN	50889	00128057	12000054	NPDES MONITORING 10/12	10/31/12	226681	885.82-
00009	BONNER ANALYTICAL TESTIN	50947	00128235	12000096	REPEAT 10/12 SOUTH LAGOON	10/31/12	226681	90.00-
00009	BONNER ANALYTICAL TESTIN	50966	00128279	12000108	MONITORING 114 LAKESHORE DR	10/31/12	226681	50.00-
00009	BONNER ANALYTICAL TESTIN	50982	00128364	12000112	BOIL WTR SAMPLES VARI LOC	10/31/12	226681	150.00-
BONNERANALYTICAL TESTIN								
Sum								1,175.82-
00009	BRUNINI	183588	00128408	12000129	SERVS 9/12 GULF RESTORATION	10/31/12	226685	3,477.50-
00009	BRUNINI	183257	00128408	12000130	SERVS 9/12 WIS-PAK	10/31/12	226685	990.00-
00009	BRUNINI	183255	00128408	12000131	SERVS 9/12 USA YEAST	10/31/12	226685	10,324.50-
BRUNINI								
Sum								14,792.00-
00009	C & S AUTOMOTIVE LLC	127	00127974	12000051	ALIGNMENT TRANS DUMP TRUCK	10/31/12	226694	57.00-
00009	C & S AUTOMOTIVE LLC	184	00128269	12000124	REPRS U#13061 SEWER	10/31/12	226694	198.13-
00009	C & S AUTOMOTIVE LLC	202	00128306	12000133	REPRS U#14702 LAGOON	10/31/12	226694	442.04-
C & SAUTOMOTIVE LLC								
Sum								697.17-
00009	C SPIRE WIRELESS (CELLUL	9/23/12-10/2	00201351	12000116	CELL SERV 9/12 W&SO&M	10/31/12	226695	207.69-
C SPIRE WIRELESS (CELLUL								
Sum								207.69-
00009	CENTRAL PIPE SUPPLY INC	R77267	00128106	12000094	PLUMB SUPP TRANS STOCK	10/31/12	226699	651.12-
00009	CENTRAL PIPE SUPPLY INC	R77493	00128064	12000111	PLUMB SUPP 226 SMITH BLAIR	10/31/12	226699	284.98-
CENTRAL PIPE SUPPLY INC								
Sum								936.10-
00009	CERTIFIED LABORATORIES	880211	00127801	12000057	CHEMICALS SEWER/LAGOON	10/31/12	226700	18,067.50-
CERTIFIED LABORATORIES								
Sum								18,067.50-

	Vendor	Invoice Number	Purchase Order	Claims Number	Item Description	Check Date	Check No.	Check Amount
00009	CITY OF HATTIESBURG FUND	101712	00201343	12000083	TRF 10/19/12 PAYROLL	10/17/12	21623	91,464.59-
CITY OF HATTIESBURG FUND								
Sum								91,464.59-
00009	COBURN'S SUPPLY CO INC	605298490	00127757	12000045	PLUMB SUPP TRANS STOCK	10/31/12	226703	479.52-
00009	COBURN'S SUPPLY CO INC	605308231	00127927	12000046	PLUMB SUPP TRANS STOCK	10/31/12	226703	195.66-
00009	COBURN'S SUPPLY CO INC	605243733	00127371	12000052	MARKING PAINT-PLANT	10/31/12	226703	664.00-
00009	COBURN'S SUPPLY CO INC	605243733-1	00127371	12000053	MARKING PAINT-PLANT	10/31/12	226703	33.20-
00009	COBURN'S SUPPLY CO INC	605314437	00128014	12000089	PIPE SUPP SEWER DEPT	10/31/12	226703	645.12-
00009	COBURN'S SUPPLY CO INC	605328599	00128117	12000135	PLUMB SUPP TRANS DEPT	10/31/12	226703	809.76-
COBURN'S SUPPLY CO INC								
Sum								2,827.26-
00009	CONTROL SYSTEMS INC	46219	00128028	12000055	SERV CALL LINCOLN RD STA	10/31/12	226706	1,740.11-
00009	CONTROL SYSTEMS INC	46110	00127806	12000121	ELEC REPRS PLT #2	10/31/12	226706	401.36-
CONTROL SYSTEMS INC								
Sum								2,141.47-
00009	COVINGTON SALES & SERVIC	59912	00127831	12000084	REPR PTS U#15916,U#12686	10/31/12	226710	828.33-
COVINGTON SALES & SERVIC								
Sum								828.33-
00009	CUMMINS MID SOUTH LLC	010-6290	00122144	12000134	CREDIT	10/31/12	226712	24.50
CUMMINS MID SOUTH LLC								
Sum								24.50
00009	D P C ENTERPRISES LP	21202089-12	00127867	12000090	CHEMICALS-LAGOON	10/31/12	226715	2,992.00-
D P CENTERPRISES LP								
Sum								2,992.00-
00009	DATALINE ASSOCIATES	PCM23872	00128131	12000126	PRINTER SUPP WATER OFFICE	10/31/12	226717	163.00-
DATALINE ASSOCIATES								
Sum								163.00-
00009	DEWS, C L & SONS FOUNDRY	122127	00127963	12000086	MANHOLE PTS MAIN ST/REDUS ST	10/31/12	226723	313.40-
DEWS,C L & SONS FOUNDRY								
Sum								313.40-
00009	DUNAGIN PEST CONTROL(PRE	8647266	00128298	12000103	SENTRICON SERV WTR OFFICE	10/31/12	226730	73.75-
DUNAGIN PEST CONTROL(PRE								
Sum								73.75-
00009	EMPIRE TRUCK SALES (H'BU	CE006020496:	00128237	12000109	DIESEL EXHAUST FLUID U#18564	10/31/12	226740	56.52-
EMPIRETRUCK SALES (H'BU								

	Vendor	Invoice Number	Purchase Order	Claims Number	Item Description	Check Date	Check No.	Check Amount
Sum								56.52-
00009	G & K SERVICES	1035305032	00128068	12000063	UNIFORMS 9/04 TRANS	10/31/12	226768	28.00-
00009	G & K SERVICES	1035307118	00128068	12000064	UNIFORMS 9/11 TRANS	10/31/12	226768	28.00-
00009	G & K SERVICES	1035309167	00128068	12000065	UNIFORMS 9/18 TRANS	10/31/12	226768	26.16-
00009	G & K SERVICES	1035311224	00128068	12000066	UNIFORMS 9/25 TRANS	10/31/12	226768	26.16-
00009	G & K SERVICES	1035305083	00128068	12000067	UNIFORMS 9/04 PLANT	10/31/12	226768	48.00-
00009	G & K SERVICES	1035307119	00128068	12000068	UNIFORMS 9/11 PLANT	10/31/12	226768	48.00-
00009	G & K SERVICES	1035309168	00128068	12000069	UNIFORMS 9/18 PLANT	10/31/12	226768	48.36-
00009	G & K SERVICES	1035311225	00128068	12000070	UNIFORMS 9/25 PLANT	10/31/12	226768	48.36-
00009	G & K SERVICES	1035307121	00128068	12000071	MOP/MAT 9/11 PLANT	10/31/12	226768	18.92-
00009	G & K SERVICES	1035309170	00128068	12000072	MOP/MAT 9/18 PLANT	10/31/12	226768	18.92-
00009	G & K SERVICES	1035305035	00128068	12000073	MOP/MAT 9/04 PLANT	10/31/12	226768	18.92-
00009	G & K SERVICES	1035311227	00128068	12000074	MOP/MAT 9/25 PLANT	10/31/12	226768	18.92-
00009	G & K SERVICES	1035305031	00128068	12000075	UNIFORMS 9/04 SEWER	10/31/12	226768	52.00-
00009	G & K SERVICES	1035307117	00128068	12000076	UNIFORMS 9/11 SEWER	10/31/12	226768	52.00-
00009	G & K SERVICES	1035309166	00128068	12000077	UNIFORMS 9/18 SEWER	10/31/12	226768	52.36-
00009	G & K SERVICES	1035311223	00128068	12000078	UNIFORMS 9/25 SEWER	10/31/12	226768	52.36-
00009	G & K SERVICES	1035305034	00128068	12000079	UNIFORMS 9/04 LAGOON	10/31/12	226768	30.30-
00009	G & K SERVICES	1035307120	00128068	12000080	UNIFORMS 9/11 LAGOON	10/31/12	226768	20.00-
00009	G & K SERVICES	1035309169	00128068	12000081	UNIFORMS 9/18 LAGOON	10/31/12	226768	20.00-
00009	G & K SERVICES	1035311226	00128068	12000082	UNIFORMS 9/25 LAGOON	10/31/12	226768	20.00-
G & KSERVICES								
Sum								675.74-
00009	GILKEY ELECTRIC SUPPLY C	238593	00127961	12000127	ELEC SUPP MAYFAIR RD PUMP STA	10/31/12	226772	101.88-
00009	GILKEY ELECTRIC SUPPLY C	238594	00127961	12000128	ELEC SUPP SCOTT ST PUMP STA	10/31/12	226772	82.76-
GILKEYELECTRIC SUPPLY C								
Sum								184.64-
00009	GRINER DRILLING SERVICE	R20612	00127215	12000056	PUMP EQUIP REPR	10/31/12	226780	42,604.00-
GRINERDRILLING SERVICE								
Sum								42,604.00-
00009	GROVER BROS RESTAURANT &	188966	00128282	12000122	ICE MAKER-PLANT	10/31/12	226781	3,995.00-
GROVERBROS RESTAURANT &								
Sum								3,995.00-
00009	HANSON PIPE & PRECAST IN	10852394	00127701	12000097	PLUMB SUPP MAIN ST PAVE PROJ	10/31/12	226788	2,201.88-
00009	HANSON PIPE & PRECAST IN	10852395	00127970	12000098	MANHOLE TOPS 40TH AVE/LINCOLN	10/31/12	226788	840.00-
HANSONPIPE & PRECAST IN								
Sum								3,041.88-
00009	I C M-IMPROVED CONSTR ME	MB424342TM	00127651	12000136	MANHOLE SILENCERS SEWER DEPT	10/31/12	226804	393.00-
I C M-IMPROVED CONSTR ME								

	Vendor	Invoice Number	Purchase Order	Claims Number	Item Description	Check Date	Check No.	Check Amount
Sum								393.00-
00009	INDUSTRIAL ELECTRIC MOTO	5081924	00127814	12000091	MOTOR REPR LAGOON	10/31/12	226808	3,521.34-
INDUSTRIAL ELECTRIC MOTO								
Sum								3,521.34-
00009	IRBY, STUART C CO	S007076295.0	00127893	12000101	ELEC SUPP-LIGHTS-WTR OFFICE	10/31/12	226812	22.92-
IRBY,STUART C CO								
Sum								22.92-
00009	MCELHANEY PLUMBING INC	200620	00127304	12000061	PLUMB SUPP LAGOON	10/31/12	226848	16.78-
00009	MCELHANEY PLUMBING INC	200734	00128301	12000118	PLUMB SUPP-TRANS	10/31/12	226848	73.90-
MCELHANEY PLUMBING INC								
Sum								90.68-
00009	MIKE'S TIRE & WHEEL CO	2163550	00128249	12000104	TRAILER TIRE/TIRE U#14712	10/31/12	226854	272.22-
00009	MIKE'S TIRE & WHEEL CO	2163564	00128270	12000105	TIRE U#17805 TRANS	10/31/12	226854	133.83-
00009	MIKE'S TIRE & WHEEL CO	2163606	00128331	12000132	TIRES LAGOON TRUCK	10/31/12	226854	348.68-
MIKE'STIRE & WHEEL CO								
Sum								754.73-
00009	MS GRASS NURSERY	23907	00128368	12000123	GRASS SOD-VARI LOC-SEWER DEPT	10/31/12	226863	80.00-
MS GRASS NURSERY								
Sum								80.00-
00009	MS POWER COMPANY	10/12 W&SO&M	00020132	12000115	MNTHLY ELEC-W&SO&M	10/31/12	226866	74,392.71-
MS POWER COMPANY								
Sum								74,392.71-
00009	NAPA AUTO PARTS	477209	00127826	12000048	REPR PTS U#14760 TRANS	10/31/12	226874	160.59-
00009	NAPA AUTO PARTS	477214	00127826	12000049	REPR PTS U#14712 TRANS	10/31/12	226874	580.56-
00009	NAPA AUTO PARTS	477479	00127973	12000050	BRAKE REPR PTS TRANS UNIT	10/31/12	226874	80.28-
00009	NAPA AUTO PARTS	477821	00128125	12000087	REPR PTS U#12518 SEWER	10/31/12	226874	74.85-
00009	NAPA AUTO PARTS	478311	00128233	12000119	REPR PTS U#7435 TRANS	10/31/12	226874	319.53-
NAPA AUTO PARTS								
Sum								1,215.81-
00009	PEARL RIVER VALLEY EPA (	10/12 W&SO&M	00020132	12000100	MNTHLY 10/12 PUBLIC SERVICES	10/31/12	226892	365.88-
PEARLRIVER VALLEY EPA (								
Sum								365.88-
00009	PHILLIPS CAR CARE CENTER	23943	00127832	12000060	REPRS U#8642 SEWER	10/31/12	226896	282.50-
PHILLIPS CAR CARE CENTER								
Sum								282.50-
00009	POLK DIRECTORIES	83470136 W&S	00128333	12000110	CITY DIRECTORY WTR OFFICE	10/31/12	226900	285.00-

Vendor		Invoice Number	Purchase Order	Claims Number	Item Description	Check Date	Check No.	Check Amount
POLK DIRECTORIES								
Sum								285.00-
00009	PUMP AND CONTROL SERVICE	424	00128096	12000088	MAINT/REPRS S LAGOON 10/8-11	10/31/12	226906	3,200.00-
00009	PUMP AND CONTROL SERVICE	425	00128097	12000125	MAINT/REPRS S LAGOON 10/15-18	10/31/12	226906	3,200.00-
PUMP AND CONTROL SERVICE								
Sum								6,400.00-
00009	RYAN MOTORS INC	211763	00127670	12000085	REPRS U#15646 TRANS	10/31/12	226915	216.52-
00009	RYAN MOTORS INC	193741	00128257	12000106	WHEEL U#14712 TRANS	10/31/12	226915	227.71-
RYAN MOTORS INC								
Sum								444.23-
00009	SHERWIN-WILLIAMS COMPANY	3065-9	00127988	12000095	RESTROOM PAINT PLT #2	10/31/12	226919	75.50-
SHERWIN-WILLIAMS COMPANY								
Sum								75.50-
00009	SOUTHERN PINE ELECTRIC P	10/12 W&SO&M	00020132	12000099	MNTHLY 10/12 PUBLIC SERVICES	10/31/12	226937	613.32-
SOUTHERN PINE ELECTRIC P								
Sum								613.32-
00009	SOUTHERN PIPE & SUPPLY C	5944557-00	00126452	12000058	PIPE SUPP U#15967 SEWER	10/31/12	226938	92.48-
SOUTHERN PIPE & SUPPLY C								
Sum								92.48-
00009	SOUTHERN WATERWORKS SUPP	44866	00127822	12000047	PLUMB SUPP TRANS STOCK	10/31/12	226941	79.24-
00009	SOUTHERN WATERWORKS SUPP	44867	00127603	12000059	SEWER UTILITY MARKERS	10/31/12	226941	996.00-
SOUTHERN WATERWORKS SUPP								
Sum								1,075.24-
00009	STANDARD OFFICE SUPPLY C	0028979.001	00128157	12000117	PRINTER SUPP WATER OFFICE	10/31/12	226945	84.83-
STANDARD OFFICE SUPPLY C								
Sum								84.83-
00009	VOLVO CONSTRUCTION EQUIP	673002279	00127815	12000062	WIRE ROPE-LAGOON	10/31/12	226975	1,649.25-
VOLVOCONSTRUCTION EQUIP								
Sum								1,649.25-
00009	WAL-MART STORES INC	009598	00128063	12000092	JANIT SUPP-PLANT	10/31/12	226977	47.43-
00009	WAL-MART STORES INC	004796	00127627	12000093	IPHONE-PLANT	10/31/12	226977	46.88-
WAL-MART STORES INC								
Sum								94.31-
00009	WALTER, PAUL & SON WELDI	1621	00128196	12000113	WELDING REPR LAGOON BOAT	10/31/12	226978	260.00-

Vendor		Invoice Number	Purchase Order	Claims Number	Item Description	Check Date	Check No.	Check Amount
WALTER, PAUL & SON WELDI								
Sum								260.00-
00009	WARREN PAVING INC	11101MB	00127607	12000044	CRUSHED CONCRETE TRANS DEPT	10/31/12	226981	2,689.47-
WARRENPAVING INC								
Sum								2,689.47-
00009	WILLMUT GAS & OIL COMPAN	10/12 W&SO&M	00020132	12000114	MNTHLY GAS-W&SO&M	10/31/12	226985	119.94-
WILLMUT GAS & OIL COMPAN								
Sum								119.94-
Sum								282,833.36-

Vendor	Invoice Number	Purchase Order	Claims Number	Item Description	Check Date	Check No.	Check Amount
WATER& SEWER FUND							
00011 BARNES, CANDACE	METER DEP RF	00201336	12000023	METER DEPOSIT REFUND	10/31/12	226667	.53-
BARNES, CANDACE							
Sum							.53-
00011 BAUCUM, MARGARET	METER DEP RF	00201336	12000018	METER DEPOSIT REFUND	10/31/12	226669	3.82-
BAUCUM, MARGARET							
Sum							3.82-
00011 BEST REALTY	METER DEP RF	00201336	12000012	METER DEPOSIT REFUND	10/31/12	226675	75.00-
BEST REALTY							
Sum							75.00-
00011 BRUNT, CHRISTOPHER M	METER DEP RF	00201336	12000011	METER DEPOSIT REFUND	10/31/12	226686	75.00-
BRUNT,CHRISTOPHER M							
Sum							75.00-
00011 BRYAN, CYNTHIA	METER DEP RF	00201346	12000056	METER DEPOSIT REFUND	10/31/12	226687	57.65-
BRYAN,CYNTHIA							
Sum							57.65-
00011 BUCKLEY, SHIRLEY	METER DEP RF	00201336	12000031	METER DEPOSIT REFUND	10/31/12	226690	4.47-
BUCKLEY, SHIRLEY							
Sum							4.47-
00011 BURTON, VICTORIA	METER DEP RF	00201346	12000054	METER DEPOSIT REFUND	10/31/12	226692	38.47-
BURTON, VICTORIA							
Sum							38.47-
00011 BUTLER, BARBARA	WATER RFD AC	00201337	12000044	WATER OVERPAYMENT RFD	10/31/12	226693	42.16-
BUTLER, BARBARA							
Sum							42.16-
00011 CARSON, CHRISTINA	METER DEP RF	00201346	12000049	METER DEPOSIT REFUND	10/31/12	226697	29.10-
CARSON, CHRISTINA							
Sum							29.10-
00011 DEARMAN, ELISABETH	METER DEP RF	00201346	12000050	METER DEPOSIT REFUND	10/31/12	226718	39.83-
DEARMAN, ELISABETH							
Sum							39.83-
00011 DEES, LINDA	METER DEP RF	00201336	12000022	METER DEPOSIT REFUND	10/31/12	226719	38.82-
DEES,LINDA							
Sum							38.82-

Vendor		Invoice Number	Purchase Order	Claims Number	Item Description	Check Date	Check No.	Check Amount
00011	DUDLEY, KIMBERLY	METER DEP RF	00201336	12000026	METER DEPOSIT REFUND	10/31/12	226728	38.82-
DUDLEY, KIMBERLY								
Sum								38.82-
00011	DUMAS, DARRELL	METER DEP RF	00201336	12000008	METER DEPOSIT REFUND	10/31/12	226729	75.00-
DUMAS,DARRELL								
Sum								75.00-
00011	DUNCAN, MARK	METER DEP RF	00201336	12000039	METER DEPOSIT REFUND	10/31/12	226731	3.82-
DUNCAN, MARK								
Sum								3.82-
00011	ENGLISH, JOSEPH W	METER DEP RF	00201336	12000019	METER DEPOSIT REFUND	10/31/12	226741	5.65-
ENGLISH, JOSEPH W								
Sum								5.65-
00011	FINK, JUDITH	METER DEP RF	00201336	12000014	METER DEPOSIT REFUND	10/31/12	226750	34.88-
FINK,JUDITH								
Sum								34.88-
00011	FRANSSEN, NATHAN	METER DEP RF	00201336	12000025	METER DEPOSIT REFUND	10/31/12	226758	34.88-
FRANSSEN, NATHAN								
Sum								34.88-
00011	FULK, TATUM R	METER DEP RF	00201336	12000013	METER DEPOSIT REFUND	10/31/12	226760	23.32-
FULK,TATUM R								
Sum								23.32-
00011	G & C FUNDING LLC	METER DEP RF	00201336	12000037	METER DEPOSIT REFUND	10/31/12	226761	.90-
G & CFUNDING LLC								
Sum								.90-
00011	G & C FUNDING, LLC	METER DEP RF	00201336	12000029	METER DEPOSIT REFUND	10/31/12	226762	38.82-
G & CFUNDING, LLC								
Sum								38.82-
00011	GALLASPY HOLDINGS	METER DEP RF	00201336	12000024	METER DEPOSIT REFUND	10/31/12	226769	38.82-
GALLASPY HOLDINGS								
Sum								38.82-
00011	GLASSAPY HOLDING LLC	METER DEP RF	00201336	12000028	METER DEPOSIT REFUND	10/31/12	226776	38.82-
GLASSAPY HOLDING LLC								
Sum								38.82-
00011	HATHORN, SUSAN	METER DEP RF	00201346	12000047	METER DEPOSIT REFUND	10/31/12	226792	75.00-

Vendor		Invoice Number	Purchase Order	Claims Number	Item Description	Check Date	Check No.	Check Amount
HATHORN, SUSAN								
Sum								75.00-
00011	HESS, GREGORY W	METER DEP RF	00201336	12000032	METER DEPOSIT REFUND	10/31/12	226794	38.82-
HESS,GREGORY W								
Sum								38.82-
00011	HUB SOUTH DEV	METER DEP RF	00201336	12000042	METER DEPOSIT REFUND	10/31/12	226801	38.82-
HUB SOUTH DEV								
Sum								38.82-
00011	HUGHES, GLENN	METER DEP RF	00201336	12000017	METER DEPOSIT REFUND	10/31/12	226802	3.82-
HUGHES, GLENN								
Sum								3.82-
00011	KING, AMANDA SUSANNE	METER DEP RF	00201336	12000015	METER DEPOSIT REFUND	10/31/12	226826	74.52-
KING,AMANDA SUSANNE								
Sum								74.52-
00011	KITE, JOHN ANDREW IV	METER DEP RF	00201336	12000041	METER DEPOSIT REFUND	10/31/12	226829	3.82-
KITE,JOHN ANDREW IV								
Sum								3.82-
00011	LEWIS, MARY	METER DEP RF	00201336	12000033	METER DEPOSIT REFUND	10/31/12	226838	73.17-
LEWIS,MARY								
Sum								73.17-
00011	MCDANIEL, LAMESHA M	METER DEP RF	00201336	12000036	METER DEPOSIT REFUND	10/31/12	226846	38.47-
MCDANIEL, LAMESHA M								
Sum								38.47-
00011	MCDANIEL, PAUL	METER DEP RF	00201346	12000058	METER DEPOSIT REFUND	10/31/12	226847	38.82-
MCDANIEL, PAUL								
Sum								38.82-
00011	MILLER, JAMES	METER DEP RF	00201346	12000057	METER DEPOSIT REFUND	10/31/12	226855	38.82-
MILLER, JAMES								
Sum								38.82-
00011	NELSON, MARGARET	METER DEP RF	00201346	12000046	METER DEPOSIT REFUND	10/31/12	226877	75.00-
NELSON, MARGARET								
Sum								75.00-
00011	NETWORK SERVICES (NSI)	10201490000	00201339	12000045	WATER COLLECTIONS FEES	10/31/12	226878	29.05-

Vendor		Invoice Number	Purchase Order	Claims Number	Item Description	Check Date	Check No.	Check Amount
NETWORK SERVICES (NSI)								
Sum								29.05-
00011	PATEL, MAYUR	METER DEP RF	00201336	12000040	METER DEPOSIT REFUND	10/31/12	226889	3.82-
PATEL,MAYUR								
Sum								3.82-
00011	PATTERSON, KATHERINE	METER DEP RF	00201336	12000038	METER DEPOSIT REFUND	10/31/12	226890	38.82-
PATTERSON, KATHERINE								
Sum								38.82-
00011	PRVO	METER DEP RF	00201346	12000055	METER DEPOSIT REFUND	10/31/12	226904	38.82-
PRVO								
Sum								38.82-
00011	PURVIS AUTO COLLISION	METER DEP RF	00201336	12000010	METER DEPOSIT REFUND	10/31/12	226907	75.00-
PURVISAUTO COLLISION								
Sum								75.00-
00011	SEAL, BETHANY	METER DEP RF	00201336	12000027	METER DEPOSIT REFUND	10/31/12	226917	4.47-
SEAL,BETHANY								
Sum								4.47-
00011	SHOEMAKER PROPERTIES	METER DEP RF	00201346	12000048	METER DEPOSIT REFUND	10/31/12	226921	5.98-
SHOEMAKER PROPERTIES								
Sum								5.98-
00011	SHOWS, MARY	METER DEP RF	00201336	12000016	METER DEPOSIT REFUND	10/31/12	226924	3.82-
SHOWS,MARY								
Sum								3.82-
00011	SIMONEAUX, CRAIG	METER DEP RF	00201336	12000034	METER DEPOSIT REFUND	10/31/12	226927	38.82-
SIMONEAUX, CRAIG								
Sum								38.82-
00011	ST LUKE HOME HEALTH SERV	METER DEP RF	00201336	12000020	METER DEPOSIT REFUND	10/31/12	226944	55.15-
ST LUKE HOME HEALTH SERV								
Sum								55.15-
00011	SYLVIA, JOHN	METER DEP RF	00201336	12000030	METER DEPOSIT REFUND	10/31/12	226947	3.82-
SYLVIA, JOHN								
Sum								3.82-
00011	TADLOCK, JOYCE	WATER RFD AC	00201337	12000043	WATER OVERPAYMENT RFD	10/31/12	226948	6.97-
TADLOCK, JOYCE								

Vendor		Invoice Number	Purchase Order	Claims Number	Item Description	Check Date	Check No.	Check Amount
Sum								6.97-
00011	THOMAS, JOSHUA C	METER DEP RF	00201346	12000053	METER DEPOSIT REFUND	10/31/12	226950	38.82-
THOMAS, JOSHUA C								
Sum								38.82-
00011	THOMAS, WENTRELL E	METER DEP RF	00201346	12000051	METER DEPOSIT REFUND	10/31/12	226951	38.82-
THOMAS, WENTRELL E								
Sum								38.82-
00011	TIHON, ALEXANDRU	METER DEP RF	00201336	12000021	METER DEPOSIT REFUND	10/31/12	226954	16.16-
TIHON,ALEXANDRU								
Sum								16.16-
00011	TIP TOP SHOWS (REFUND)	WATER RFD AC	00201347	12000059	WATER OVERPAYMENT RFD	10/31/12	226955	64.74-
TIP TOP SHOWS (REFUND)								
Sum								64.74-
00011	UHL, JOHN	METER DEP RF	00201336	12000035	METER DEPOSIT REFUND	10/31/12	226961	38.82-
UHL, JOHN								
Sum								38.82-
00011	WARD, JASMINE A	METER DEP RF	00201336	12000009	METER DEPOSIT REFUND	10/31/12	226979	75.00-
WARD,JASMINE A								
Sum								75.00-
00011	WILSON, DWIGHT	METER DEP RF	00201346	12000052	METER DEPOSIT REFUND	10/31/12	226986	57.01-
WILSON, DWIGHT								
Sum								57.01-
Sum								1,871.57-

	Vendor	Invoice Number	Purchase Order	Claims Number	Item Description	Check Date	Check No.	Check Amount
POLICEFORFEITURES FUND								
00019	D P S CRIME LAB	IN 711 13CL0	00128074	12000002	ANALYTICAL FEES 10/12	10/31/12	226716	200.00-
D P SCRIME LAB								
Sum								200.00-
00019	FORREST CTY DIST ATTY(SE	20%SHARE $15	00201349	12000005	20% SHARE SEIZED CASH	10/31/12	226756	303.00-
FORREST CTY DIST ATTY(SE								
Sum								303.00-
00019	OFFICE DEPOT INC	628525752001	00128004	12000003	LUGGAGE CART	10/31/12	226883	39.39-
00019	OFFICE DEPOT INC	628525751001	00128004	12000004	SHREDDER	10/31/12	226883	72.71-
OFFICEDEPOT INC								
Sum								112.10-
Sum								615.10-

Vendor	Invoice Number	Purchase Order	Claims Number	Item Description	Check Date	Check No.	Check Amount
2004 TIF B&I-HOME DEPOT							
00021 TRUSTMARK NATIONAL BANK/	7769 FEE ERG	00201338	12000002	AGENT FEES-HOME DEPOT	10/18/12	17007	750.00-
TRUSTMARK NATIONAL BANK/ Sum							750.00-
Sum							750.00-

Vendor		Invoice Number	Purchase Order	Claims Number	Item Description	Check Date	Check No.	Check Amount
AIRPORT IMPROVEMENT FUND								
00039	ARE CONSULTANTS INC	12-1002B	00128417	12000006	SERVS 10/12 AIRPT LAYOUT PLAN	10/31/12	226661	33,747.88-
ARE CONSULTANTS INC								
Sum								33,747.88-
00039	FAIRLEY CONSTRUCTION SER	APPL#5 AIRPO	00128409	12000007	CONSTR AIRPT DRNGE/SAFETY IMP	10/31/12	226745	16,554.74-
FAIRLEY CONSTRUCTION SER								
Sum								16,554.74-
Sum								50,302.62-

	Vendor	Invoice Number	Purchase Order	Claims Number	Item Description	Check Date	Check No.	Check Amount
MUNICIPAL ROAD & BRIDGE								
00072	BANCORPSOUTH EQUIPMENT F	CONT #002-00	00201351	12000013	TRACTOR LEASE PMT DUE 10/15/12	10/24/12	71254	1,412.41-
BANCORPSOUTH EQUIPMENT F								
Sum								1,412.41-
00072	CATERPILLAR FINANCIAL SE	14301744 CON	00201347	12000012	BACKHOE LEASE PMT DUE 10/29/12	10/22/12	71253	1,086.14-
CATERPILLAR FINANCIAL SE								
Sum								1,086.14-
00072	JACKSON,BOWMAN & ARRINGT	50738	00128419	12000019	SERVS 4TH ST EXPAN PHASE II	10/31/12	226814	2,165.85-
JACKSON,BOWMAN & ARRINGT								
Sum								2,165.85-
00072	NEEL-SCHAFFER INC	01005160	00128425	12000014	SERVS 8/12 4TH ST EXPAN PROJ	10/31/12	226876	3,378.15-
00072	NEEL-SCHAFFER INC	01005163	00128426	12000015	SERVS 8/12 BROADWAY/BOUIE	10/31/12	226876	1,812.69-
00072	NEEL-SCHAFFER INC	1005200-11-2	00128427	12000016	SERVS 8/12 SIDEWALK PROJECT	10/31/12	226876	226.20-
00072	NEEL-SCHAFFER INC	01005200-6	00128428	12000017	SERVS 8/12 BIKE LANE STRIPING	10/31/12	226876	8,579.33-
NEEL-SCHAFFER INC								
Sum								13,996.37-
00072	PUCKETT MACHINERY COMPAN	R3761202	00128061	12000011	RENT TRACKHOE PUBLIC WORKS	10/31/12	226905	36,612.00-
PUCKETT MACHINERY COMPAN								
Sum								36,612.00-
00072	SHOWS DEARMAN & WAITS IN	17156	00128414	12000018	SERVS 8/26-9/22 4TH ST EXPAN	10/31/12	226923	4,210.00-
SHOWSDEARMAN & WAITS IN								
Sum								4,210.00-
00072	THOMPSON ENGINEERING	12092723	00128412	12000020	SERVS 7/28-9/28 W BELTWAY	10/31/12	226952	11,130.03-
THOMPSON ENGINEERING								
Sum								11,130.03-
Sum								70,612.80-

	Vendor	Invoice Number	Purchase Order	Claims Number	Item Description	Check Date	Check No.	Check Amount
MASS TRANSIT FUND								
00073	C SPIRE WIRELESS (CELLUL	9/23/12-10/2	00201351	12000047	CELL SERV 9/12 MASS TRANSIT	10/31/12	226695	157.07-
C SPIRE WIRELESS (CELLUL								
Sum								157.07-
00073	CITY OF HATTIESBURG FUND	101712	00201343	12000037	TRF 10/19/12 PAYROLL	10/17/12	17004	22,459.30-
CITY OF HATTIESBURG FUND								
Sum								22,459.30-
00073	CUMMINS MID SOUTH LLC	003-35477	00128221	12000052	REPR PTS U#16234	10/31/12	226712	218.26-
CUMMINS MID SOUTH LLC								
Sum								218.26-
00073	EMPIRE TRUCK SALES (H'BU	CE006069730:	00127065	12000034	FOOT PEDAL/STEERING U#14952	10/31/12	226740	91.84-
00073	EMPIRE TRUCK SALES (H'BU	RE006015544:	00127861	12000036	REPRS U#14953	10/31/12	226740	692.85-
00073	EMPIRE TRUCK SALES (H'BU	RE006015520:	00127861	12000041	REPRS U#14953	10/31/12	226740	734.85-
00073	EMPIRE TRUCK SALES (H'BU	RE006015543:	00127861	12000042	CREDIT	10/31/12	226740	734.85
00073	EMPIRE TRUCK SALES (H'BU	CE006069869:	00127693	12000043	REPR PTS U#14952	10/31/12	226740	573.33-
00073	EMPIRE TRUCK SALES (H'BU	RE006015545:	00128031	12000044	REPRS U#14952	10/31/12	226740	613.22-
EMPIRETRUCK SALES (H'BU								
Sum								1,971.24-
00073	GILLIG LLC	4814242 CRED	00123816	12000028	CREDIT	10/31/12	226773	43.20
00073	GILLIG LLC	4757591	00128252	12000053	REPR PTS VARI BUSES	10/31/12	226773	4,675.84-
GILLIGLLC								
Sum								4,632.64-
00073	MS POWER COMPANY	10/12 M TRAN	00020132	12000046	MNTHLY ELEC-MASS TRANSIT	10/31/12	226866	573.52-
MS POWER COMPANY								
Sum								573.52-
00073	NAPA AUTO PARTS	477480	00127594	12000048	REPR PTS U#16234	10/31/12	226874	63.90-
00073	NAPA AUTO PARTS	477490	00127996	12000049	DISC BRAKES FOR GMC BUSES	10/31/12	226874	443.60-
NAPA AUTO PARTS								
Sum								507.50-
00073	NATIONAL BUS SALES & LSG	254685	00127805	12000035	REPR PTS U#14953	10/31/12	226875	125.43-
NATIONAL BUS SALES & LSG								
Sum								125.43-
00073	O'REILLY AUTO PARTS	0943-349145	00127064	12000050	BULBS/FUSES FOR GMC BUSES	10/31/12	226881	44.99-
O'REILLY AUTO PARTS								
Sum								44.99-
00073	OLD RIVER TRUCK SALES IN	10222230008	00126457	12000038	HEAT/AC REPR U#14953	10/31/12	226884	414.20-

	Vendor	Invoice Number	Purchase Order	Claims Number	Item Description	Check Date	Check No.	Check Amount
00073	OLD RIVER TRUCK SALES IN	10222650017	00126223	12000039	REPLACE SEATS ON NEW BUSES	10/31/12	226884	3,260.00-
00073	OLD RIVER TRUCK SALES IN	10222680001	00127530	12000040	SEAT BRACKETS FOR NEW BUSES	10/31/12	226884	110.80-
OLD RIVER TRUCK SALES IN								
Sum								3,785.00-
00073	VERIZON WIRELESS	6797763912	00128378	12000045	GPS SERV HANDICAP BUSES	10/31/12	226970	201.45-
VERIZON WIRELESS								
Sum								201.45-
00073	WARING OIL CO (GULFPORT)	001187914	00128307	12000051	MOTOR OIL BUSES	10/31/12	226980	1,707.88-
WARINGOIL CO (GULFPORT)								
Sum								1,707.88-
Sum								36,384.28-

Vendor		Invoice Number	Purchase Order	Claims Number	Item Description	Check Date	Check No.	Check Amount
WATER&SEWER CONSTRUCTION FUND								
00075	HRG (HATTIESBURG RESOURC	011003-01-4	00128430	12000006	SERVS 8/1-9/20 USA YEAST	10/31/12	226800	6,660.72-
HRG (HATTIESBURG RESOURC								
Sum								6,660.72-
00075	L & A CONTRACTING CO	APPL#7 SLUDG	00128431	12000004	SERVS SOUTH LAGOON IMPS	10/31/12	226831	82,665.25-
L & ACONTRACTING CO								
Sum								82,665.25-
00075	SHOWS DEARMAN & WAITS IN	17157	00128420	12000005	SERVS 8/26-9/22 PROJ PHOENIX	10/31/12	226923	721.20-
SHOWSDEARMAN & WAITS IN								
Sum								721.20-
Sum								90,047.17-

Vendor		Invoice Number	Purchase Order	Claims Number	Item Description	Check Date	Check No.	Check Amount
COMMUNITY CENTERS' FUND								
00077	AUTO ARMATURE SERVICE IN	5895	00127998	12000021	BATTERY U#15930	10/31/12	226664	119.95-
AUTO ARMATURE SERVICE IN								
Sum								119.95-
00077	C SPIRE WIRELESS (CELLUL	9/23/12-10/2	00201351	12000028	CELL SERV 9/12 COMM CNTRS	10/31/12	226695	49.65-
C SPIRE WIRELESS (CELLUL								
Sum								49.65-
00077	CITY OF HATTIESBURG FUND	101712	00201343	12000023	TRF 10/19/12 PAYROLL	10/17/12	36048	21,061.75-
CITY OF HATTIESBURG FUND								
Sum								21,061.75-
00077	FORREST CTY SOIL & WATER	CULTURAL CNT	00201357	12000033	DAMAGE DEPOSIT REFUND	10/31/12	226757	150.00-
FORREST CTY SOIL & WATER								
Sum								150.00-
00077	INNOVATIVE SERVICE SOLUT	20120115	00127847	12000022	AED SERV COMM CNTRS	10/31/12	226809	585.00-
INNOVATIVE SERVICE SOLUT								
Sum								585.00-
00077	IRBY, STUART C CO	S007073676.0	00127955	12000024	ELEC SUPP CE ROY/SHERRILL CTR	10/31/12	226812	218.73-
IRBY,STUART C CO								
Sum								218.73-
00077	JONES, PATSY D (REFUND)	SHERRILL CNT	00201357	12000032	DAMAGE DEPOSIT REFUND	10/31/12	226818	100.00-
JONES,PATSY D (REFUND)								
Sum								100.00-
00077	MINOR, JEFFREY (REFUND)	SHERRILL CNT	00201357	12000030	DAMAGE DEPOSIT REFUND	10/31/12	226857	100.00-
MINOR,JEFFREY (REFUND)								
Sum								100.00-
00077	MISS HATTIESBURG SCHOLAR	SHERRILL CNT	00201357	12000034	DAMAGE DEPOSIT REFUND	10/31/12	226858	100.00-
MISS HATTIESBURG SCHOLAR								
Sum								100.00-
00077	MS POWER COMPANY	10/12 COMM C	00020132	12000027	MNTHLY ELEC-COMM CNTRS	10/31/12	226866	2,631.88-
MS POWER COMPANY								
Sum								2,631.88-
00077	N & H ELECTRONIC DISTRIB	106731	00128086	12000025	BATTERIES-C CTR PODIUMS	10/31/12	226871	127.68-
N & HELECTRONIC DISTRIB								
Sum								127.68-

	Vendor	Invoice Number	Purchase Order	Claims Number	Item Description	Check Date	Check No.	Check Amount
00077	THOMPSON, CHIQUILA (REFU	SHERRILL CNT	00201357	12000029	DAMAGE DEPOSIT REFUND	10/31/12	226953	100.00-
THOMPSON, CHIQUILA (REFU								
Sum								100.00-
00077	VESELY'S NURSERY	PO#127780 10	00127780	12000020	FALL PLANTS COMM CNTRS	10/31/12	226971	812.50-
VESELY'S NURSERY								
Sum								812.50-
00077	VICKERS, SHAMEKIA (REFUN	CE ROY CNTR	00201357	12000031	DAMAGE DEPOSIT REFUND	10/31/12	226973	100.00-
VICKERS, SHAMEKIA (REFUN								
Sum								100.00-
00077	WILLMUT GAS & OIL COMPAN	10/12 COMM C	00020132	12000026	MNTHLY GAS-COMM CNTRS	10/31/12	226985	31.59-
WILLMUT GAS & OIL COMPAN								
Sum								31.59-
Sum								26,288.73-

Vendor		Invoice Number	Purchase Order	Claims Number	Item Description	Check Date	Check No.	Check Amount
COMMUNITY DEVELOP. BLOCK GRANT								
00082	BREAKTHROUGH COMMUNITY S	01 - 111 COL	00128187	12000020	EMERGENCY REPAIRS-COMPLETED	10/18/12	36052	9,930.00-
00082	BREAKTHROUGH COMMUNITY S	04	00128186	12000022	UTILITY ASST PROGRAM DRAW #4	10/18/12	36055	768.90-
BREAKTHROUGH COMMUNITY S								
Sum								10,698.90-
00082	C SPIRE WIRELESS (CELLUL	9/23/12-10/2	00201351	12000024	CELL SERV 9/12 CDBG	10/31/12	226695	32.01-
C SPIRE WIRELESS (CELLUL								
Sum								32.01-
00082	CITY OF HATTIESBURG FUND	101712	00201343	12000017	TRF 10/17/12 PAYROLL	10/17/12	36049	7,604.83-
CITY OF HATTIESBURG FUND								
Sum								7,604.83-
00082	J & J CONSTRUCTION	49 -	00128188	12000018	LAWN-543 MILLER ST/C O #4	10/18/12	36050	1,600.00-
J & JCONSTRUCTION								
Sum								1,600.00-
00082	MCDUFFIE, SANDRA (CDBG)	10/16/12 - I	00128189	12000019	TEMP RELOC-10/18-11/17/12	10/18/12	36051	650.00-
MCDUFFIE, SANDRA (CDBG)								
Sum								650.00-
00082	OFFICE DEPOT INC	624323192001	00126738	12000015	MINOR OFFICE EQUIP	10/31/12	226883	187.75-
00082	OFFICE DEPOT INC	624323193001	00126738	12000016	MINOR OFFICE EQUIP	10/31/12	226883	142.40-
OFFICEDEPOT INC								
Sum								330.15-
00082	PINE BELT COMMUNITY SERV	10/16/12 DRA	00128185	12000021	MEALS PROGRAM	10/18/12	36053	809.51-
PINE BELT COMMUNITY SERV								
Sum								809.51-
00082	THE HILLS LLC (CDBG)	10/16/12 - D	00128184	12000023	HOTEL FOR CONFERENCE	10/18/12	36057	615.00-
THE HILLS LLC (CDBG)								
Sum								615.00-
Sum								22,340.40-

Vendor		Invoice Number	Purchase Order	Claims Number	Item Description	Check Date	Check No.	Check Amount
K.P.ZOO CAPITAL IMPROVEMENT								
00098	H'BURG CONVENTION COMMIS	REPORT#9 7/1	00128075	12000001	ZOO QUARANTINE EXPENSE REIMB	10/31/12	226785	41,398.00-
H'BURGCONVENTION COMMIS								
Sum								41,398.00-
Sum								41,398.00-

Vendor		Invoice Number	Purchase Order	Claims Number	Item Description	Check Date	Check No.	Check Amount
SPECIAL SALES TAX-T&A								
00107	H'BURG CONVENTION COMMIS	10/18/12	00201341	49	FOOD/BEVERAGE TAX 09/12	10/18/12	17009	352,010.55-
H'BURGCONVENTION COMMIS								
Sum								352,010.55-
00107	H'BURG TOURISM COMMISSIO	10/18/12	00201340	48	MOTEL SALES TAX 09/2012	10/18/12	17008	48,674.64-
H'BURGTOURISM COMMISSIO								
Sum								48,674.64-
Sum								400,685.19-

Vendor	Invoice Number	Purchase Order	Claims Number	Item Description	Check Date	Check No.	Check Amount
GrandTotal Level Sum							2,947,347.78-

ADDENDUM CLAIMS DOCKET
PERIOD ENDING OCTOBER 31, 2012

FUND	VENDOR	INVOICE NUMBER	PURCHASE ORDER	CLAIMS NUMBER	ITEM DESCRIPTION	CHECK DATE	CHECK NUMBER	CHECK AMOUNT
01	R E GRAPHICS & PHOTOGRAPHY	10/30/2012	126080	718	PINEBELT WELLNESS COUNCIL-WEB DESIGI	11/1/12	17071	3,000.00
01	TRUSTMARK BUSINESS CARD	3018 DUPREE 9/4/12	128512	717	MAYOR'S TRAVEL CHARGES	11/1/12	17070	237.76
75	ALAQUA INC	9/18/12 COUNCIL MEETING	128511	9	DOWN PYMT USA YEAST PRE-TRTMT EQUIP	11/1/12	36068	1,759,350.00
							TOTAL	1,762,587.76

City of Hattiesburg, MS

200 Forrest St.
P.O. Box 1898
Hattiesburg, MS 39401

Meeting Agenda

Tuesday, November 6, 2012

4:30 PM

Council Chambers

City Council - Amendments to the Agenda

Add Policy Agenda Item VI.- 18 at the request of the Administration as follows:

2012-1332

Adopt Resolutions appointing Jonathan Farris and Carol Jones as Municipal Court Judge Pro-tems for City of Hattiesburg, effective November 6, 2012.

Attachments: Resol.Farris Judge Protem

executed Resol 2012-126 Farris Judge Protem

Resol.Jones Judge Protem

executed Resol.2012-127 Jones Judge Protem

Add Routine Agenda Item VII. - 17 at the request of the Administration as follows:

2012-1333

Approve and Authorize advertisement for Request for Proposals for Land Application of Treated Wastewater Effluent from the City's wastewater treatment facilities.

Attachments: Land App RFP

executed Land App RFP

City of Hattiesburg, MS

200 Forrest St.
P.O. Box 1898
Hattiesburg, MS 39401

Master

File Number: 2012-1332

File ID:	2012-1332	**Type:**	Resolution	**Status:**	Passed
Version:	1	**Reference:**		**In Control:**	City Council
				File Created:	11/06/2012
Brief Title:	Apointing Municipal Court Judge Pro-tems			**Final Action:**	11/06/2012
				Minute Book Number:	MB2012-1/385-386

Title:

Adopt Resolutions appointing Jonathan Farris and Carol Jones as Municipal Court Judge Pro-tems for City of Hattiesburg, effective November 6, 2012.

Notes:

Sponsors:		**Enactment Date:**	
Attachments:	Resol.Farris Judge Protem, executed Resol 2012-126 Farris Judge Protem, Resol.Jones Judge Protem, executed Resol.2012-127 Jones Judge Protem	**Enactment Number:**	
Contact:		**Meeting Date:**	11/06/2012
Drafter:	Marilyn Schwandt	**Effective Date:**	

History of Legislative File

Ver-sion:	Acting Body:	Date:	Action:	Sent To:	Due Date:	Return Date:	Result:
1	City Council - Amendments to the Agenda	11/06/2012					
1	City Council	11/06/2012	Adopt				Pass

Action Text: A MOTION was made by Council Member Carroll and seconded by Council Member Naylor to Adopt Resolutions appointing Jonathan Farris and Carol Jones as Municipal Court Judges Pro-tem for City of Hattiesburg, effective November 6, 2012.

Council member Carroll asked the Mayor if the pro tem judges are paid on an hourly rate; Mayor DuPree responded that they are paid on the same scale as previous [pro tem judges], $100 per hour.

Following discussion, the Motion received the affirmative vote of the Council as follows:

Yeas: 5 - Bradley, Delgado, Carroll, Ware and Naylor

Nays: 0

Yea:	5	President Bradley Council Member Delgado Council Member Carroll Vice President Ware Council Member Naylor
ΓEL-No Vote:	0	

Text of Legislative File 2012-1332

Title

Adopt Resolutions appointing Jonathan Farris and Carol Jones as Municipal Court Judge Pro-tems for City of Hattiesburg, effective November 6, 2012.

Summary

Budget Information

Expenditure Type

Purchasing Item

Publication Information

RESOLUTION

RESOLUTION FOR THE APPOINTMENT OF MUNICIPAL COURT JUDGE PRO-TEM FOR THE CITY OF HATTIESBURG

WHEREAS, the Council recognizes the need to extend the appointment of Municipal Court Judge Pro-tem; and

WHEREAS, the Council desires the administration of the City to continue to operate its routine functions.

NOW, THEREFORE, BE IT RESOLVED BY THE COUNCIL OF THE CITY OF HATTIESBURG:

Section 1. That the appointment of Jonathan Farris as Municipal Court Judge Pro-tem until further ordered.

Section 2. That public interest and necessity requiring same, this Resolution shall become effective November 6, 2012.

The above and foregoing Resolution, after having been first reduced to writing, was introduced by Council member _____, seconded by Council member _____, and was adopted by the following vote, to-wit:

YEAS: NAYS:

The President thereby declared the motion carried and the Resolution adopted, this the 6th day of November, 2012.

(S E A L)

ATTEST: ADOPTED:

_____ _____

CLERK OF COUNCIL PRESIDENT

The above and foregoing Resolution having been submitted to and approved by the Mayor, this the 6th Day of November, 2012.

ATTEST: APPROVED:

_____ _____

CITY CLERK MAYOR

RESOLUTION

RESOLUTION FOR THE APPOINTMENT OF MUNICIPAL COURT JUDGE PRO-TEM FOR THE CITY OF HATTIESBURG

WHEREAS, the Council recognizes the need to extend the appointment of Municipal Court Judge Pro-tem; and

WHEREAS, the Council desires the administration of the City to continue to operate its routine functions.

NOW, THEREFORE, BE IT RESOLVED BY THE COUNCIL OF THE CITY OF HATTIESBURG:

Section 1. That the appointment of Jonathan Farris as Municipal Court Judge Pro-tem until further ordered.

Section 2. That public interest and necessity requiring same, this Resolution shall become effective November 6, 2012.

The above and foregoing Resolution, after having been first reduced to writing, was introduced by Council member Carroll, seconded by Council member Naylor, and was adopted by the following vote, to-wit:

YEAS: Bradley
Delgado
Carroll
Ware
Naylor

NAYS: None

The President thereby declared the motion carried and the Resolution adopted, this the 6th day of November, 2012.

(SEAL)

ATTEST:

CLERK OF COUNCIL

ADOPTED:

PRESIDENT

The above and foregoing Resolution having been submitted to and approved by the Mayor, this the 6th Day of November, 2012.

ATTEST:

CITY CLERK

APPROVED:

MAYOR

RESOLUTION

RESOLUTION FORTHE APPOINTMENT OF MUNICIPAL COURT JUDGE PRO-TEM FOR THE CITY OF HATTIESBURG

WHEREAS, the Council recognizes the need to extend the appointment of Municipal Court Judge Pro-tem; and

WHEREAS, the Council desires the administration of the City to continue to operate its routine functions.

NOW, THEREFORE, BE IT RESOLVED BY THE COUNCIL OF THE CITY OF HATTIESBURG:

Section 1. That the appointment of Carol Jones as Municipal Court Judge Pro-tem, until further ordered.

Section 2. That public interest and necessity requiring same, this Resolution shall become effective November 6, 2012.

The above and foregoing Resolution, after having been first reduced to writing, was introduced by Council member _____, seconded by Council member _____, and was adopted by the following vote, to-wit:

YEAS: NAYS:

The President thereby declared the motion carried and the Resolution adopted, this the 6th day of November, 2012.

(S E A L)

ATTEST: ADOPTED:

_____ _____

CLERK OF COUNCIL PRESIDENT

The above and foregoing Resolution having been submitted to and approved by the Mayor, this the 6th Day of November, 2012.

ATTEST: APPROVED:

_____ _____

CITY CLERK MAYOR

RESOLUTION

RESOLUTION FORTHE APPOINTMENT OF MUNICIPAL COURT JUDGE PRO-TEM FOR THE CITY OF HATTIESBURG

WHEREAS, the Council recognizes the need to extend the appointment of Municipal Court Judge Pro-tem; and

WHEREAS, the Council desires the administration of the City to continue to operate its routine functions.

NOW, THEREFORE, BE IT RESOLVED BY THE COUNCIL OF THE CITY OF HATTIESBURG:

Section 1. That the appointment of Carol Jones as Municipal Court Judge Pro-tem, until further ordered.

Section 2. That public interest and necessity requiring same, this Resolution shall become effective November 6, 2012.

The above and foregoing Resolution, after having been first reduced to writing, was introduced by Council member Carroll, seconded by Council member Naylor, and was adopted by the following vote, to-wit:

YEAS: Bradley
Delgado
Carroll
Ware
Naylor

NAYS: None

The President thereby declared the motion carried and the Resolution adopted, this the 6th day of November, 2012.

(SEAL)

ATTEST:

CLERK OF COUNCIL

ADOPTED:

PRESIDENT

The above and foregoing Resolution having been submitted to and approved by the Mayor, this the 6th Day of November, 2012.

ATTEST:

CITY CLERK

APPROVED:

MAYOR

City of Hattiesburg, MS

200 Forrest St.
P.O. Box 1898
Hattiesburg, MS 39401

Master

File Number: 2012-1333

File ID:	2012-1333	**Type:**	Regular Agenda Item	**Status:**	Agenda Ready
Version:	1	**Reference:**		**In Control:**	City Council
				File Created:	11/05/2012
Brief Title:	Approve and Authorize advertisement for Request for Proposals for land application of treated wastewater effluent.			**Final Action:**	
				Minute Book Number:	MB2012-1/388

Title:

Approve and Authorize advertisement for Request for Proposals for Land Application of Treated Wastewater Effluent from the City's wastewater treatment facilities.

Notes:

Sponsors:		**Enactment Date:**	
Attachments:	Land App RFP, executed Land App RFP	**Enactment Number:**	
Contact:		**Meeting Date:**	11/05/2012
Drafter:	Sharon Waits	**Effective Date:**	

History of Legislative File

Version:	Acting Body:	Date:	Action:	Sent To:	Due Date:	Return Date:	Result:
1	City Council - Amendments to the Agenda	11/06/2012					
1	City Council	11/06/2012					

Text of Legislative File 2012-1333

Title

Approve and Authorize advertisement for Request for Proposals for Land Application of Treated Wastewater Effluent from the City's wastewater treatment facilities.

Summary

Approve and Authorize advertisement for Request for Proposals for Land Application of Treated Wastewater Effluent from the City's wastewater treatment facilities.

Budget Information

Expenditure Type

Purchasing Item

Publication Information

Hattiesburg American and Clarion Ledger
11/16/12 & 11/23/12

LEGAL NOTICE

REQUEST FOR PROPOSALS FOR
CITY OF HATTIESBURG, MISSISSIPPI
LAND APPLICATION OF TREATED WASTEWATER EFFLUENT

The City of Hattiesburg will be accepting proposals from interested landowners and/or vendors to receive and dispose of treated wastewater effluent from the City's wastewater treatment facilities. Interested landowners and/or vendors shall submit sealed proposals in the format specified in this Request for Proposals no later than **10:00 A.M. local time (CST), December 20, 2012**. The sealed proposals shall be delivered to the Office of the City Clerk, P.O. Box 1898, 200 Forrest Street, Hattiesburg, Mississippi, 39403-1898, (601) 545-4552.

The City of Hattiesburg will not discriminate in the purchase of goods and services on the basis of race, color, creed, sex, handicap or national origin. Verbal proposals or proposals received after the closing date will not be accepted. All proposals deemed to be in the best interest of the City of Hattiesburg will be considered for further evaluation. The City of Hattiesburg reserves the right to reject any and all proposals received and to waive any technicalities or informalities.

PUBLISHED by Order of the Council on the 6th day of November, 2012.

CITY OF HATTIESBURG, MISSISSIPPI

BY: _____
Eddie R. Myers, City Clerk

(SEAL)

TABLE OF CONTENTS

SECTION I – GENERAL INFORMATION

A. The City of Hattiesburg, Mississippi is evaluating all available options for the upcoming improvements to be made at the South Wastewater Treatment Plant. As such, the City is inviting all interested land owners or interested service providers to submit proposals for receiving from the City and disposing treated wastewater effluent using a land application process.

   Proposals should be mailed or hand delivered to:

   City Clerk
   City of Hattiesburg
   P.O. Box 1898
   Hattiesburg, MS 39403-1898
   Physical Address: 200 Forrest St.
   PROPOSAL: Land Application of Treated Wastewater Effluent

   Questions regarding this Request for Proposals should be directed, in writing, to **HRG, LLC, Attn: Mr. Shea McNeese, P.E., P. O. Box 1487, Hattiesburg, MS 39403-1487**, upon which answers will be issued, in writing. The cut-off date for questions will be no later than **10:00 A.M. local time (CST), December 18, 2012**.

B. All proposals the City receives that are deemed to be in the best interest of the City of Hattiesburg will be selected for further evaluation. The City of Hattiesburg reserves the right to reject any and all proposals, to waive any and all technicalities or informalities and to accept any and all proposals deemed to be in the best interest of the City.

C. Any party submitting a proposal shall abide by and comply with the true intent of the scope as contained herein and not take advantage of any unintentional error or omission, but shall fully address the full intent and meaning of each aspect of the scope of work.

D. The City is a tax exempt organization.

E. The City of Hattiesburg, in accordance with Title VI of the Civil Rights Act of 1964 and Title 49, Code of Federal Regulations, hereby notifies all interested parties that it will affirmatively insure that in any contract entered into pursuant to this advertisement, minority business enterprises will be afforded full opportunity to submit proposals in response to this invitation and will not be discriminated against on the grounds of race, color, creed, sex, handicap or national origin in consideration for an award.

SECTION II – PROJECT WORK SCOPE

The City of Hattiesburg in inviting proposals from all interested land owners and service providers to provide for the disposal of treated wastewater effluent utilizing a land application process. The City is investigating all technically and economically feasible alternatives to upgrade and/or replace the existing South Lagoon Wastewater Treatment Facility.

Land owners interested in submitting a Proposal must include the following information as a part of their proposal:

A. Evidence of clear title, with no liens, to the property included in the Proposal.
B. The location of the property included in the Proposal clearly outlined on a USGS Quad Map, scale 1:24000. USGS Quad Maps are available at www.maris.state.ms.us. The location of the property included in the Proposal clearly outlined on a USDA Soils Map. USDA Soils Maps are publically available at http://websoilsurvey.nrcs.usda.gov .
C.

Service providers interested in submitting a Proposal must include the following information at a part of their Proposal:

A. A signed, and notarized, agreement with the owner of the property the service provider includes in the Proposal.
B. Evidence of clear title, with no liens, to the property included in the Proposal.
C. A Statement of Qualifications for the service provider clearly identifying related experience operating similar land application facilities, corporate declaration indicating ownership, annual accounting statements indicating financial capability and capacity, and references.
D. The location of the property included in the Proposal clearly outlined on a USGS Quad Map, scale 1:24000. USGS Quad Maps are available www.maris.state.ms.us.
E. The location of the property included in the Proposal clearly outlined on a USDA Soils Map. USDA Soils Maps are publically available at http://websoilsurvey.nrcs.usda.gov .
F.

The City of Hattiesburg will thoroughly review and consider all proposals received with regard to standard design recommendations from the United States Environmental Protection Agency (EPA) for land application facilities. Any proposals deemed to be insufficient, technically inadequate, or not economically feasible will be rejected. All proposals deemed to be technically and economically feasible will held for further evaluation.

The interested parties whose proposals are held for further evaluation will be contacted by the City or its representatives and asked to enter into an agreement to allow right of entry so that additional technical evaluations will be performed on the proposed property. Additional investigations may include, but not limited to, surveying, geotechnical investigations, and wetlands and environmental assessments. The City of Hattiesburg will bear all costs associated with its additional investigations. Upon completion of the additional investigations, the remaining properties will be ranked for consideration by the City of Hattiesburg and individual properties and proposals will be selected to negotiate a service agreement with the City.

The selected provider(s) will enter into an agreement with the City of Hattiesburg to construct, permit, and operate an effluent land disposal system in accordance with the rules and regulations of the Mississippi Department of Environmental Quality (MDEQ) and the United States Environmental Protection Agency (EPA) and to receive treated wastewater effluent from the City of Hattiesburg for an agreed to fee.

LEGAL NOTICE

REQUEST FOR PROPOSALS FOR
CITY OF HATTIESBURG, MISSISSIPPI
LAND APPLICATION OF TREATED WASTEWATER EFFLUENT

The City of Hattiesburg will be accepting proposals from interested landowners and/or vendors to receive and dispose of treated wastewater effluent from the City's wastewater treatment facilities. Interested landowners and/or vendors shall submit sealed proposals in the format specified in this Request for Proposals no later than **10:00 A.M. local time (CST), December 20, 2012**. The sealed proposals shall be delivered to the Office of the City Clerk, P.O. Box 1898, 200 Forrest Street, Hattiesburg, Mississippi, 39403-1898, (601) 545-4552.

The City of Hattiesburg will not discriminate in the purchase of goods and services on the basis of race, color, creed, sex, handicap or national origin. Verbal proposals or proposals received after the closing date will not be accepted. All proposals deemed to be in the best interest of the City of Hattiesburg will be considered for further evaluation. The City of Hattiesburg reserves the right to reject any and all proposals received and to waive any technicalities or informalities.

PUBLISHED by Order of the Council on the 6th day of November, 2012.

CITY OF HATTIESBURG, MISSISSIPPI

BY: Eddie R. Myers

Eddie R. Myers, City Clerk

(SEAL)

SECTION I – GENERAL INFORMATION

A. The City of Hattiesburg, Mississippi is evaluating all available options for the upcoming improvements to be made at the South Wastewater Treatment Plant. As such, the City is inviting all interested land owners or interested service providers to submit proposals for receiving from the City and disposing treated wastewater effluent using a land application process.

Proposals should be mailed or hand delivered to:

City Clerk
City of Hattiesburg
P.O. Box 1898
Hattiesburg, MS 39403-1898
Physical Address: 200 Forrest St.
PROPOSAL: Land Application of Treated Wastewater Effluent

Questions regarding this Request for Proposals should be directed, in writing, to **HRG, LLC, Attn: Mr. Shea McNeese, P.E., P. O. Box 1487, Hattiesburg, MS 39403-1487**, upon which answers will be issued, in writing. The cut-off date for questions will be no later than **10:00 A.M. local time (CST), December 18, 2012**.

B. All proposals the City receives that are deemed to be in the best interest of the City of Hattiesburg will be selected for further evaluation. The City of Hattiesburg reserves the right to reject any and all proposals, to waive any and all technicalities or informalities and to accept any and all proposals deemed to be in the best interest of the City.

C. Any party submitting a proposal shall abide by and comply with the true intent of the scope as contained herein and not take advantage of any unintentional error or omission, but shall fully address the full intent and meaning of each aspect of the scope of work.

D. The City is a tax exempt organization.

E. The City of Hattiesburg, in accordance with Title VI of the Civil Rights Act of 1964 and Title 49, Code of Federal Regulations, hereby notifies all interested parties that it will affirmatively insure that in any contract entered into pursuant to this advertisement, minority business enterprises will be afforded full opportunity to submit proposals in response to this invitation and will not be discriminated against on the grounds of race, color, creed, sex, handicap or national origin in consideration for an award.

SECTION II – PROJECT WORK SCOPE

The City of Hattiesburg in inviting proposals from all interested land owners and service providers to provide for the disposal of treated wastewater effluent utilizing a land application process. The City is investigating all technically and economically feasible alternatives to upgrade and/or replace the existing South Lagoon Wastewater Treatment Facility.

Land owners interested in submitting a Proposal must include the following information as a part of their proposal:

A. Evidence of clear title, with no liens, to the property included in the Proposal.
B. The location of the property included in the Proposal clearly outlined on a USGS Quad Map, scale 1:24000. USGS Quad Maps are available at www.maris.state.ms.us. The location of the property included in the Proposal clearly outlined on a USDA Soils Map. USDA Soils Maps are publically available at http://websoilsurvey.nrcs.usda.gov .
C.

Service providers interested in submitting a Proposal must include the following information at a part of their Proposal:

A. A signed, and notarized, agreement with the owner of the property the service provider includes in the Proposal.
B. Evidence of clear title, with no liens, to the property included in the Proposal.
C. A Statement of Qualifications for the service provider clearly identifying related experience operating similar land application facilities, corporate declaration indicating ownership, annual accounting statements indicating financial capability and capacity, and references.
D. The location of the property included in the Proposal clearly outlined on a USGS Quad Map, scale 1:24000. USGS Quad Maps are available www.maris.state.ms.us.
E. The location of the property included in the Proposal clearly outlined on a USDA Soils Map. USDA Soils Maps are publically available at http://websoilsurvey.nrcs.usda.gov .
F.

The City of Hattiesburg will thoroughly review and consider all proposals received with regard to standard design recommendations from the United States Environmental Protection Agency (EPA) for land application facilities. Any proposals deemed to be insufficient, technically inadequate, or not economically feasible will be rejected. All proposals deemed to be technically and economically feasible will held for further evaluation.

The interested parties whose proposals are held for further evaluation will be contacted by the City or its representatives and asked to enter into an agreement to allow right of entry so that additional technical evaluations will be performed on the proposed property. Additional investigations may include, but not limited to, surveying, geotechnical investigations, and wetlands and environmental assessments. The City of Hattiesburg will bear all costs associated with its additional investigations. Upon completion of the additional investigations, the remaining properties will be ranked for consideration by the City of Hattiesburg and individual properties and proposals will be selected to negotiate a service agreement with the City.

The selected provider(s) will enter into an agreement with the City of Hattiesburg to construct, permit, and operate an effluent land disposal system in accordance with the rules and regulations of the Mississippi Department of Environmental Quality (MDEQ) and the United States Environmental Protection Agency (EPA) and to receive treated wastewater effluent from the City of Hattiesburg for an agreed to fee.