City of Hattiesburg, MS

200 Forrest St.
P.O. Box 1898
Hattiesburg, MS 39401

Meeting Agenda - Final

Tuesday, June 4, 2013

10:00 AM

Council Chambers

City Council

I. Call to Order

II. Call to Prayer and Pledge of Allegiance

III. Agenda Order

IV. Approval of Minutes

for the May 6, 7, 8, 20, 21 and 31, 2013 City Council meetings.

V. PRESENTATION AGENDA

VI. POLICY AGENDA

VI.-1 2013-0305 Authorize Mayor to execute duplicate originals of permit from The Alabama Great Southern Railway Company for access to the railroad's right of way as required for the construction of the Longleaf Trace Depot to Chain Park Project (aka Newman-Buschman Neighborhood Shared Use Pathway).

Attachments: BR0011777 - DRAFT Agreement - Hattiesburg MS - Chain Park Trail
executed BR0011777 - DRAFT Agreement - Hattiesburg MS - Chain Park Trail
email

VI.-2 2013-0306 Authorize Mayor to execute duplicate originals of a Professional Services Agreement with Shows, Dearman & Waits, Inc. for design and construction engineering services for the extension of water and sewer services on W. L. Runnels Drive.

Attachments: SDW Agreement
SDW Agreement Letter
executed SDW Agreement

VI.-3 2013-0314 Authorize Mayor to execute duplicate original agreement between City of Hattiesburg Parks and Recreation Department and Hattiesburg Arts Council to provide art for children programs and art and cultural opportunities for adults, seniors, and persons with disabilities for Hattiesburg residents. This program will operate October 1, 2012, through September 30, 2013. (Nunc Pro Tunc)

Attachments: Hattiesburg Civic Arts Council Contract 2013
executed Hattiesburg Civic Arts Council Contract 2013

VII. ROUTINE AGENDA

VII.-1 2013-0300 Acknowledge receipt of the monthly budget report for the month ending May 31, 2013, on permanent file in the City Clerk's Office.

Attachments: Copy of All Expenditures MAY 2013

Copy of All Revenues May 2013

VII.-2 2013-0301 Acknowledge receipt of two bid purchase docket for the period of March 26, 2013 through May 27, 2013 as provided for in Section 31-7-13 (b) of the Mississippi Code of 1972.

Attachments: 06-04-Two Quote Docket

VII.-3 2013-0313 Acknowledge receipt of FY2011-2012 Expenditure Report from Hattiesburg Arts Council for 2012 Summer Arts Program.

Attachments: 2012 Hatt Arts Council Expend Report

VII.-4 2013-0311 Approve final acceptance of the project Country Club Area Water Rehabilitation; Authorize publication of the Notice of Final Settlement of Contract for same.

Attachments: NOTICE OF FINAL SETTLEMENT-Country Club Area Water Rehab

Closeout Documents

VII.-5 2013-0310 Approve final acceptance of the project Construction of New Cells at the North Lagoon; Authorize Publication of the Notice of Final Settlement of Contract for same.

Attachments: Closeout Documents

NOTICE OF FINAL SETTLEMENT-North Lagoon Expansion

VII.-6 2013-0304 Acknowledge receipt of a street deed for a part of Blocks 1 & 2 of High-Land Park Subdivision as more particularly described in the attached deed granted by Welkin Enterprises, LLC; Accept said street for maintenance.

Attachments: Street Deed - Cedar Street - Signed

VII.-7 2013-0302 Acknowledge receipt of the bid on May 16, 2013 for Term Bid Item #17 - Uniforms for the Hattiesburg Fire Department and accept the bid as per recommendation as the only bid received that meet the City's advertised specifications.

Attachments: 06-04-Accept PS 17

VII.-8 2013-0309 Authorize and approve publication of Notice of Availability and Request for Proposals for Public Service Grant funds in connection with the City of Hattiesburg's Community Development Block Grant Program (CDBG). {Entitlement}

Attachments: CDBG PUBLIC SERVICE APPLICATION FORM to Accompany RFP

NOA.PubServiceGrants June 2013

executed NOA.PubServiceGrants June 2013

VII.-9 2013-0303 Approve Specifications for Mass Notification System #6 (Country Club Area Warning Siren) and authorize advertisement for bids for same.

Attachments: 11211_signed specs

11211_advertisment for bids.2

executed 11211_advertisment for bids.2

VII.-10 2013-0308 Approve and authorize issuance of manual checks for CDBG Program Claims per attached memorandum. {Entitlement}

Attachments: MEMORANDUM-Manual Checks-CDBG

CDBG Supporting Docs

VII.-11 2013-0312 Approve Claims Docket for the period ending May 31, 2013.

Attachments: claim 6.4.13

City of Hattiesburg, MS

200 Forrest St.
P.O. Box 1898
Hattiesburg, MS 39401

Master

File Number: 2013-0305

File ID: 2013-0305 **Type:** Regular Agenda Item **Status:** Agenda Ready

Version: 1 **Reference:** **In Control:** City Council

File Created: 05/28/2013

Brief Title: Authorize Mayor to execute railroad permit required for the Longleaf Trace Depot to Chain Park project.

Final Action: 06/04/2013

Minute Book Number: MB2013-159-160

Title:

Authorize Mayor to execute duplicate originals of permit from The Alabama Great Southern Railway Company for access to the railroad's right of way as required for the construction of the Longleaf Trace Depot to Chain Park Project (aka Newman-Buschman Neighborhood Shared Use Pathway).

Notes:

Sponsors:

Enactment Date:

Attachments: BR0011777 - DRAFT Agreement - Hattiesburg MS - Chain Park Trail, executed BR0011777 - DRAFT Agreement - Hattiesburg MS - Chain Park Trail, email

Enactment Number:

Contact:

Meeting Date: 06/04/2013

Drafter: Sharon Waits

Effective Date:

History of Legislative File

Version:	Acting Body:	Date:	Action:	Sent To:	Due Date:	Return Date:	Result:
1	City Council	06/04/2013	Authorize				Pass

Action Text: A MOTION was made by Council Member Carroll and seconded by Council Member Delgado to Authorize Mayor to execute duplicate originals of permit from The Alabama Great Southern Railway Company for access to the railroad's right of way as required for the construction of the Longleaf Trace Depot to Chain Park Project (aka Newman-Buschman Neighborhood Shared Use Pathway).

There being no discussion, the Motion received the affirmative vote of the Council as follows:

Yeas: 3 - Bradley, Delgado and Carroll

Nays: 0

Absent: 2 - Ware and Naylor

Yea:	3	President Bradley
		Council Member Delgado
		Council Member Carroll
ΓEL-No Vote:	0	

Text of Legislative File 2013-0305

Title

Authorize Mayor to execute duplicate originals of permit from The Alabama Great Southern Railway Company for access to the railroad's right of way as required for the construction of the Longleaf Trace Depot to Chain Park Project (aka Newman-Buschman Neighborhood Shared Use Pathway).

Summary

Authorize Mayor to execute railroad permit required for the Longleaf Trace Depot to Chain Park project.

Budget Information

Expenditure Type

Purchasing Item

Publication Information

THIS AGREEMENT, made and entered into by and between

THE ALABAMA GREAT SOUTHERN RAILWAY COMPANY, an Alabama corporation, hereinafter styled "Railway"; and

CITY OF HATTIESBURG, a municipality of the State of Mississippi, hereinafter referred to as "City":

W I T N E S S E T H:

WHEREAS, CITY, at its own cost and expense, has found it necessary to construct a shared-use pathway within the right of way or property of Railway (hereinafter "Project"), in the vicinity of Railway Milepost NO-84.50, at or near **HATTIESBURG, Forrest County, Mississippi** located substantially as shown upon print of Drawing marked Exhibit A, attached hereto and made a part of this Agreement; and

WHEREAS, the Railroad is willing to permit the Project upon railroad right of way, but upon the terms and conditions hereinafter expressed and contained

NOW THEREFORE, the PARTIES HERETO agree as follows:

SECTION 1. Before this agreement shall be in force and effect, the plans shall meet the approval of the parties hereto, and upon such written approval shall become a part of this agreement by reference.

SECTION 2. The parties hereto shall construct or cause to be constructed, in substantial accordance with the approved plans, specifications and special provisions, the following items of work:

A. The following items shall be let in contract by CITY after competitive bidding as provided by law, at Project expense, subject to the provision of this agreement:

1. Grading, draining and paving the project, including constructing any necessary side drives and approaches.
2. Construction of structure to protect the public from any ballast or other debris falling from Railway right of way.
3. Erection of fencing needed to keep public off of Railway right of way.

CITY's work shall be awarded to a competent and experienced contractor(s) who has (have) adequate equipment, organization and finances, and Railway shall be notified of the contractor(s) receiving such award for all work affecting Railway's interest.

B. The following items shall be done or caused by Railway with its own forces, at Project expense, subject to the provisions of this agreement:

1. All temporary and permanent alterations or relocations of communication and signal wire lines, signals and railroad appurtenances on its right-of-way as may be necessitated by the Project

2. The furnishing of switchtenders, flagmen, watchmen and other protective services and devices to promote safety and insure continuity of train operation as may be necessary in connection with the work performed by Railway's forces and CITY's contractor(s).

3. Construction engineering inspection services and accounting

CITY to reimburse 100% of the Railway's actual cost for the force account work in connection with the Project, including but not limited to the expenditures herein expressly described. The cost of said items to be performed by Railway in connection with the Project has been included in Exhibit B attached and made a part hereof.

SECTION 3. Any work not specifically provided for in Section 2 shall be done by one of the parties hereto as may be mutually agreed upon from time to time during the progress of the work.

SECTION 4. No changes shall be made on any approved plans, specifications or special provisions by either party hereto without the consent of the other party, in writing.

SECTION 5. All work performed under this Agreement shall be in accordance with "Special Provisions For Protection Of Railway Interest," marked Exhibit C, which is attached hereto and made a part hereof by reference.

CITY will require its contractor(s) to use Railway personnel to protect railroad traffic made necessary or occasioned by his operations, as set forth in special provisions to be approved by the parties hereto, which are more specifically set for in "Exhibit C".

Railway agrees to furnish CITY's contractor(s) at Project expense, and CITY shall require its contractor(s) to use such switchtenders, flagmen, telegraph operators, pilots, watchmen or other protective services and devices, other than engineering personnel, as in the opinion of Railway are required to promote the safety and insure continuity of railroad traffic during the contractor(s) operations.

Railway agrees to bill CITY as part of its regular force account work the actual cost for such protective services and devices including the actual rate of pay, plus the amount paid for overtime, insurance, railroad retirement, vacation allowances, holidays, health and welfare, transportation, deadhead and turn around time, accounting and billing.

CITY agrees to reimburse Railway for said protective services and devices as a part of its regular force account work as set forth in this Agreement.

SECTION 6. Railway, to the extent that its title enables it so to do, and without warranty, hereby grants unto CITY and it's contractor the right to perform Project upon and adjacent to the right of way or property of Railway, at the aforedescribed location; RESERVING, however, unto Railway the right to continue to maintain, repair, renew and operate its railway and appurtenances, and to construct such additional tracks and other railway facilities, and to maintain, repair, renew and operate the same as in the judgment of Railway may be requisite; it being understood that if Railway elects or is required to construct any additional tracks or other structures or facilities thereon and shall find it necessary to disturb the Project or any portion of the development located within the limits of said right of way in so doing, CITY will, at CITY's own cost and expense, upon notice in writing so to do served upon it by Railway, make such changes to the Project or development as may be necessary to accommodate the work of Railway.

SECTION 7. The CITY shall have general charge of the engineering work on the Project, but Railway shall provide such engineering services as Railway may require. Nothing herein shall deny Railway the right to place inspectors on work being done on its property or facilities. The costs for such services shall be borne by CITY.

SECTION 8. Subsequent to the award of any contract(s), and before any work is started on this Project, a conference shall be held between the representatives of CITY, Railway, and the interested contractor(s), at a time and place as designated by CITY's representative, for the purpose of coordinating the work to be performed by the several parties, and at which time a schedule of operations will be adopted.

SECTION 9. CITY shall require its contractor(s) at all times to use all reasonable care and diligence and to cooperate with the officials of Railway in order to avoid accidents, damage or unnecessary delay to or interference with trains upon the tracks of Railway.

In the event that delays or difficulties arise in securing necessary approvals or in securing necessary rights of way or settling damages or damage claims which, in the opinion of CITY, render it impracticable to utilize funds from the current appropriation for the construction of the Project, CITY may serve formal notice of cancellation of this agreement upon Railway and this agreement shall, with the exception of the obligations set forth in the following sentence, become null and void.
CITY shall reimburse Railway for all costs and expenses incurred by it at the request of CITY, on account of the Project prior to such cancellation and shall restore Railway's property to the condition existing prior to the initiation of the Project construction.

SECTION 10. CITY shall require the contractor(s), before entering upon Railway's right-of-way for performance of any construction work, or work preparatory thereto, to notify the authorized representative of Railway for the occupancy and use of Railway's right-of-way outside the limits of the structure, and to comply with his recommendations relative to the requirements for railroad clearances, operation and general safety regulations.

SECTION 11. CITY shall acquire or settle all property, property rights and all damages to property affected by the Project. The cost of said property, property rights and damages to property shall be included as part of the Project expense.

SECTION 12. Railway may bill CITY monthly or periodically for its force account work when cost exceeds $1,000.00. Progressive invoices may be submitted for work done during the previous month or period showing the portion of estimated cost completed. A final bill covering actual cost of work and showing all details shall be submitted to CITY within ninety (90) days of completion of said work. CITY shall pay all bills within sixty (60) days of receipt thereof. Final payment for all amounts due Railway shall be paid by CITY within sixty (60) days after the final audit has been made and approved.

SECTION 13. (a) To the extent permitted by the laws of Mississippi, CITY agrees to indemnify and hold Railway, and any other corporation controlling, controlled by or under common control with Railway, harmless from and against all loss, damage, liability or expense arising from injury or loss of life to any person or damage to any property while CITY is engaged in the work of constructing, improving, maintaining, or repairing the Project adjacent to and on the property of Railway as hereinabove provided.

(b) During the period of construction and/or improvement, or any period of maintenance, or repair, CITY and its contractor, if it employs one, shall procure and maintain, at their expense, in a form and with a company satisfactory to Railway, a policy of Commercial General Liability Insurance. Said policy shall have a minimum limit of not less than a combined single limit of $2,000,000 per occurrence for all loss, damage, cost and expense, including attorneys' fees, arising out of bodily injury liability and property damage liability during the policy period. In addition, said policy shall be endorsed to name Railway as an additional insured and shall include a severability of interests provision. A

certificate of insurance certifying the existence of such insurance shall be furnished to Railway. This certificate shall state that the insurance coverage will not be suspended, voided, canceled, or reduced in coverage or limits without (30) days advance written notice to Railway.

(c) In addition, CITY or its contractor, if it employs one, shall procure, at its expense, and furnish to Railway a Railroad Protective Liability Insurance policy naming the Railway as the named insured. Said policy shall have minimum limits of not less than a combined single limit of $2,000,000 each occurrence and $6,000,000 in the aggregate for bodily injury and property damage liability, and physical damage to property. Said policy shall be underwritten by a company satisfactory to Railway on Insurance Services Offices Form No. CG 00 35 10 01. The original Railroad Protective Liability Insurance Policy shall be furnished to Railway.

(d) Evidence of such insurance (Certificate of Insurance for the Commercial General Liability Insurance and the original Railroad Protective Liability Insurance Policy) must be furnished to and approved by the Director Risk Management, Norfolk Southern Corporation, Three Commercial Place, Norfolk, Virginia 23510-2191, prior to occupancy of Railway's property or commencement of construction, improvement, maintenance, or repair on Railway's premises.

The above insurance provisions are more specifically set forth in "Exhibit D" which is attached to this agreement.

SECTION 14. The work provided for in the agreement shall be commenced by the parties hereto within thirty (30) days from the latter of the following: (1) the date on which this agreement becomes effective, (2) the date on which Railway has been notified by CITY to proceed, or (3) the date on which all funds necessary therefore on the part of CITY have been properly certified and made available; and it shall be completed within a reasonable time thereafter. Buying and assembling of materials shall be constructed as compliance with the foregoing thirty (30) day provision.

Upon completion of the Project herein contemplated, CITY, shall own and maintain the trail covered structure, maintain the approach trail, own and maintain all other trail facilities constructed or changed under the terms of this agreement. Railway will permit access onto its property to perform any maintenance by CITY on its facilities. Access to Railway's property for future maintenance will be subject to Railway's terms and conditions for temporary right of entry. Railway shall, at its own cost and expense, maintain, repair, and renew all of its facilities constructed or changed under the terms of this agreement. Railway will not be vested with any rights of ownership in trail covered structure, and will not have a duty to maintain trail covered structure, and will not, if the trail is abandoned, have a duty to remove the trail covered structure form the Railway right of way.

SECTION 15. CITY shall require its contractor(s), upon the completion of the work of said contractor(s), to remove from within the limits of Railway's right-of-way all machinery, equipment, surplus materials, false work, rubbish or temporary buildings of said contractor(s), and to leave the right-of-way upon which the said contractor(s) carried on operations in a neat condition, satisfactory to the authorized representative of Railway.

SECTION 16. Notwithstanding any other provision of this Agreement, it is mutually understood, agreed and covenanted that CITY accepts this Agreement as a mere license and assumes all risk of damage to its property by reason of its occupation of the premises herein described, caused by any defects therein or business carried on therein, if such loss, damage or injury is caused by the negligence of CITY, its officers, agents or employees.

SECTION 17. It is agreed that Railway shall be exempt from any and all charges or assessments of any kind or character on account of the location, construction and/or improvement or maintenance of the Railway facilities within the limits of the right of way or property of Railway, or on account of any other thing done or omitted to be done by CITY in connection therewith.

SECTION 18. The word "Railway" as used herein shall include any other company whose property at the aforesaid location may be leased or operated by Railway. Said term also shall include Railway's officers, agents and employees, and any parent company, subsidiary or affiliate of Railway and their officers, agents and employees.

SECTION 19. The Project herein contemplated shall be subject to all appropriate Federal laws, rules, regulations, orders and approvals pertaining to all agreements, plans estimates, specifications, award of contract, acceptance of work and procedure in general. CITY will reimburse Railway as hereinbefore provided, for only such items of work and expense, and in such amounts and forms as are proper and eligible for payment.

SECTION 20. This Agreement may be terminated by either party hereto upon sixty (60) days' written notice to the other party. During said sixty-day period, CITY shall restore said premises to a condition satisfactory to Railway's chief engineering officer. CITY agrees to reimburse Railway for any and all costs of such work required to restore said premises to a condition satisfactory to Railway's chief engineering officer. No termination of this Agreement shall affect any liability incurred by either party hereto prior to the effective date of such termination.

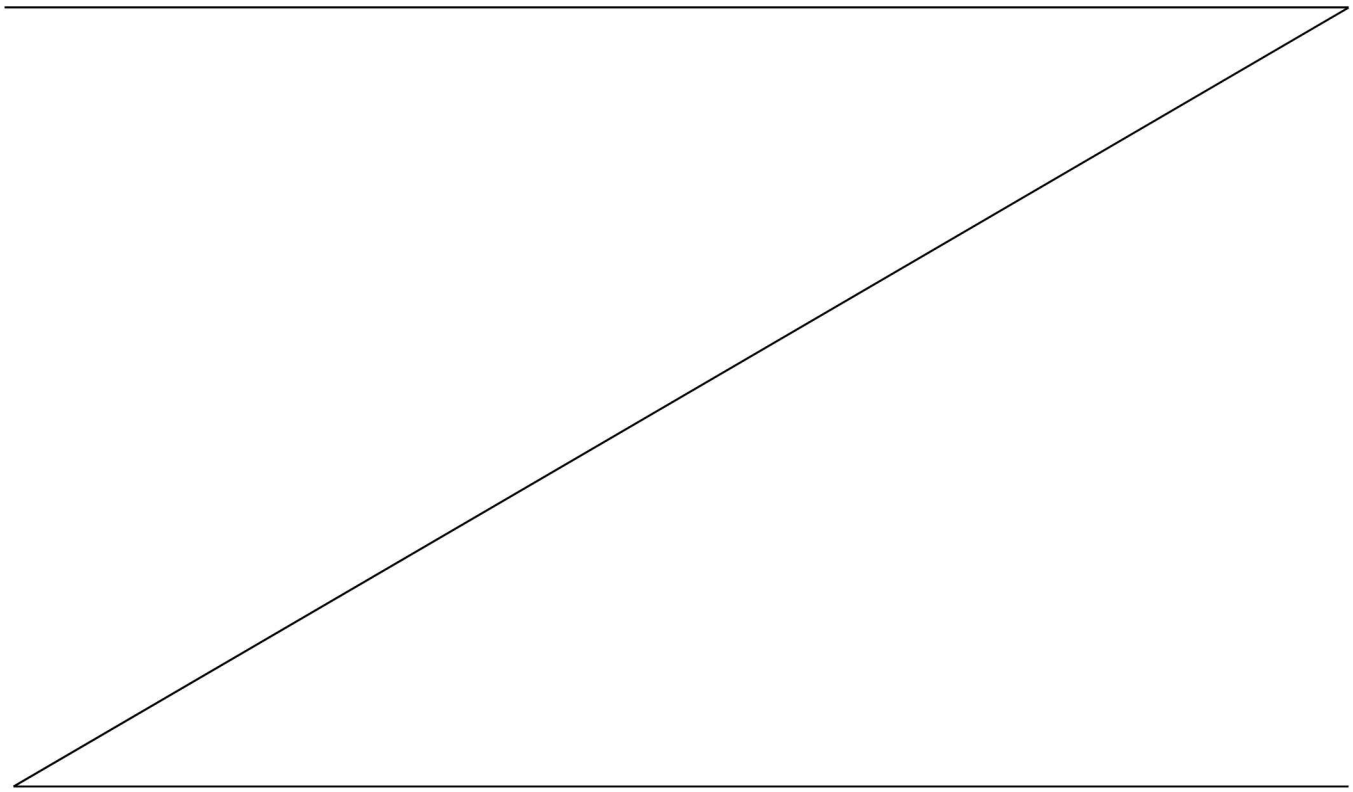

This Agreement shall take effect as of the _____ day of _____, 20___.

IN WITNESS WHEREOF, the parties hereto have executed this Agreement in duplicate, each part being an original, as of the _____ day of _____, 20___.

Witness:

THE ALABAMA GREAT SOUTHERN RAILWAY COMPANY

By

_____
As to Railway

_____
General Manager

Witness:

CITY OF HATTIESBURG

By

_____
As to CITY

_____

Title: _____

NS File: BR0011777

EXHIBIT A



NOTICE TO DRAWING HOLDER

NEEL-SCHAFFER, INC., HEREINAFTER REFERRED TO AS THE ENGINEER HAS PREPARED AND FURNISHED THIS DRAWING TO THE OWNER FOR USE ON THIS PROJECT ONLY. THIS DRAWING SHOULD NOT BE USED ON EXTENSIONS OF THIS PROJECT OR ON ANY OTHER PROJECT. ANY REUSE OF THIS DRAWING, WITHOUT WRITTEN VERIFICATION OR ADAPTATION BY THE ENGINEER, SHALL BE AT THE REUSER'S SOLE RISK AND THE REUSER SHALL INDEMNIFY AND HOLD HARMLESS THE ENGINEER FROM ALL CLAIMS, DAMAGES, LOSSES AND EXPENSES, INCLUDING ATTORNEY'S FEES ARISING OUT OF OR RESULTING THEREFROM.

REVISIONS			
NO.	DATE	BY	DESCRIPTION

DRAWING INFORMATION	
N-S PROJECT NO.: 8933.001	
FILENAME: -----.DWG	
SCALE: NONE	
SURVEYED BY:	
DSGN: --	DATE: 06/2012
DRWN: JSB	DATE: 06/2012
CHKD:	DATE:
QA/QC:	DATE:

SHARED USE PATHWAY FROM NEWMAN-BUSCHMAN NEIGHBORHOOD TO CHAIN PARK

CITY OF HATTIESBURG
FORREST COUNTY, MS

NEEL-SCHAFFER
Solutions you can build upon

EXHIBIT 1
PROJECT LOCATION

WORKING NUMBER:	DRAWING NUMBER:
4022-010	1

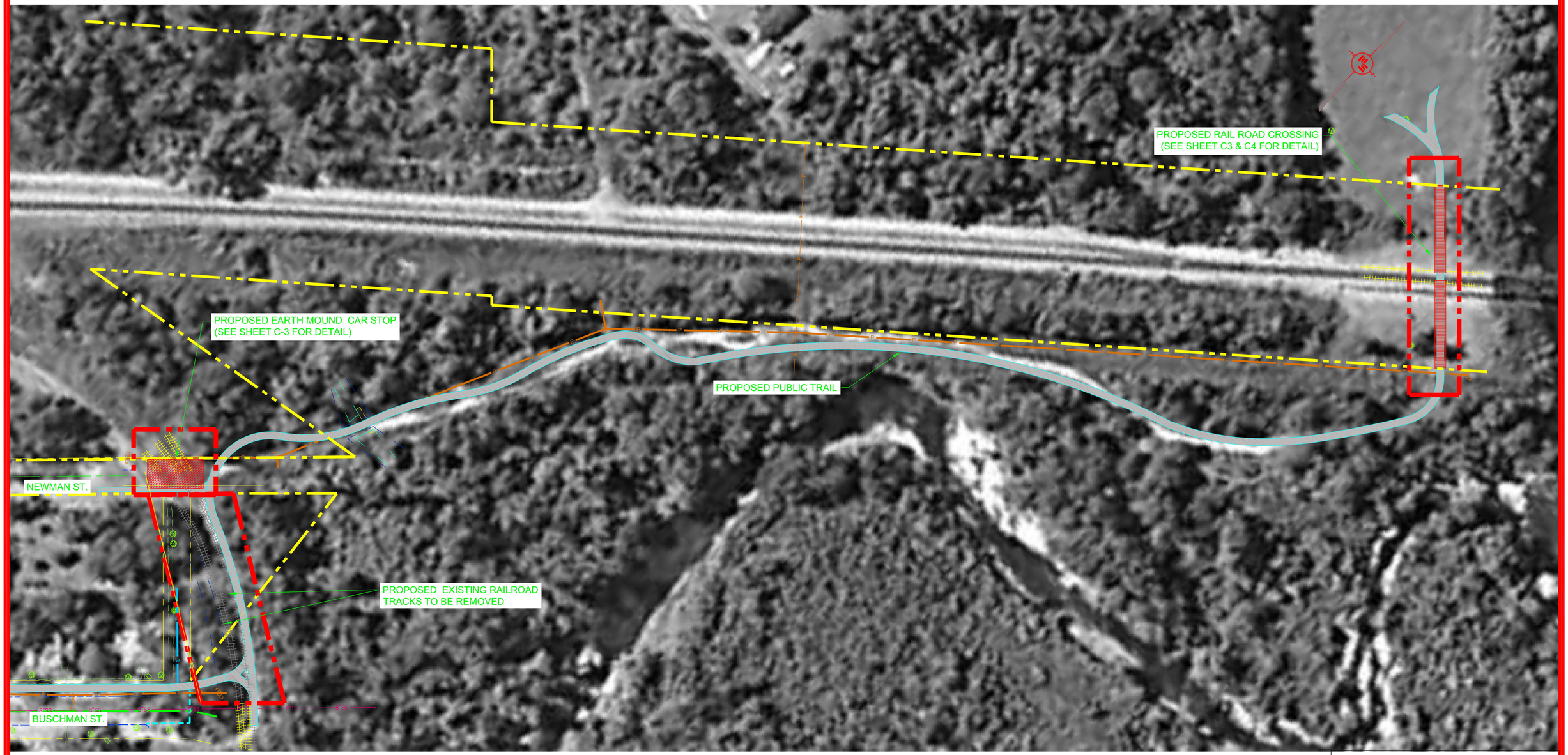

EXHIBIT A

GRAPHIC SCALE

50 0 25 50 100 200

(IN FEET)

1 inch = 50 feet

LEGEND	
DESCRIPTION	SYMBOL
SANITARY SEWER	8"SS
POWER POLE	
POWER LINE	P
GAS LINE	G
RAILROAD RIGHT OF WAY	
PROPOSED TRAIL	
PROPOSED RAILROAD CROSSING	

NOTICE TO DRAWING HOLDER

NEEL-SCHAFFER, INC., HEREINAFTER REFERRED TO AS THE ENGINEER HAS PREPARED AND FURNISHED THIS DRAWING TO THE OWNER FOR USE ON THIS PROJECT ONLY. THIS DRAWING SHOULD NOT BE USED ON EXTENSIONS OF THIS PROJECT OR ON ANY OTHER PROJECT. ANY REUSE OF THIS DRAWING, WITHOUT WRITTEN VERIFICATION OR ADAPTATION BY THE ENGINEER, SHALL BE AT THE REUSER'S SOLE RISK AND THE REUSER SHALL INDEMNIFY AND HOLD HARMLESS THE ENGINEER FROM ALL CLAIMS, DAMAGES, LOSSES AND EXPENSES, INCLUDING ATTORNEY'S FEES ARISING OUT OF OR RESULTING THEREFROM.

REVISIONS			
NO.	DATE	BY	DESCRIPTION

DRAWING INFORMATION	
N-S PROJECT NO.: 8933.001	
SCALE: NONE	
SURVEYED BY:	
DSGN: --	DATE: 06/29/2012
DRWN: JSB	DATE: 06/29/2012
CHKD:	DATE:
QA/QC:	DATE:

SHARED USE PATHWAY FROM NEWMAN-BUSCHMAN NEIGHBORHOOD TO CHAIN PARK

CITY OF HATTIESBURG
FORREST COUNTY, MS

NEEL-SCHAFFER
Solutions you can build upon

EXHIBIT 2
TRAIL MAP

WORKING NUMBER:	DRAWING NUMBER:
4022-010	2

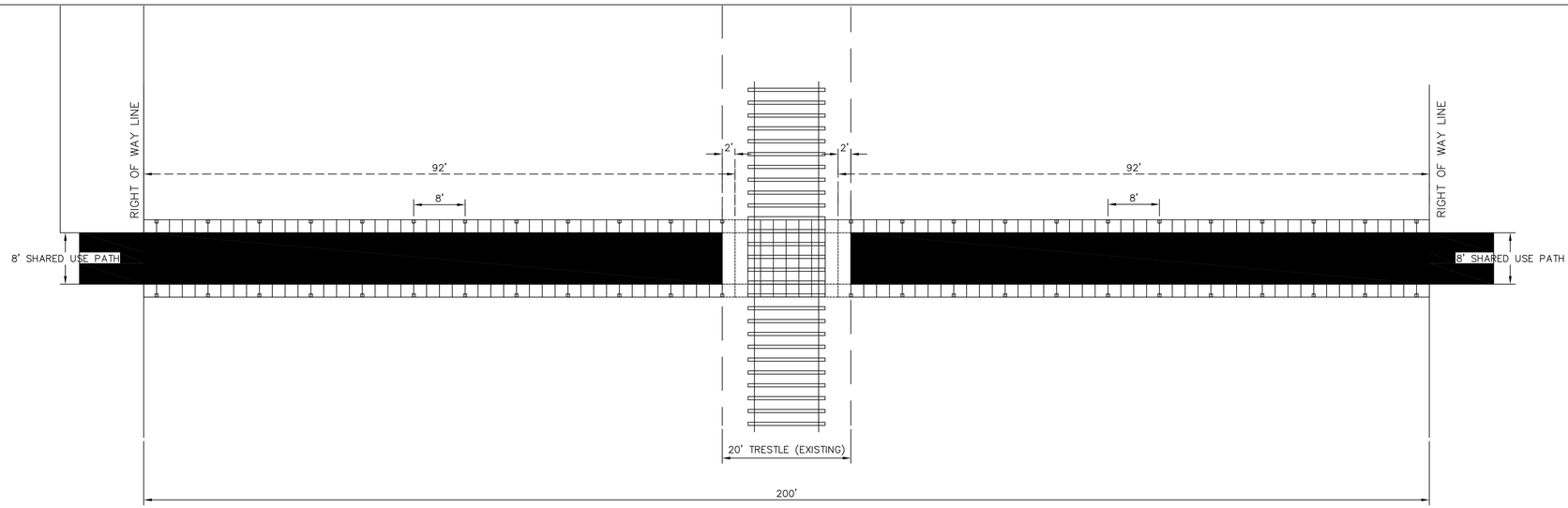

PLAN VIEW

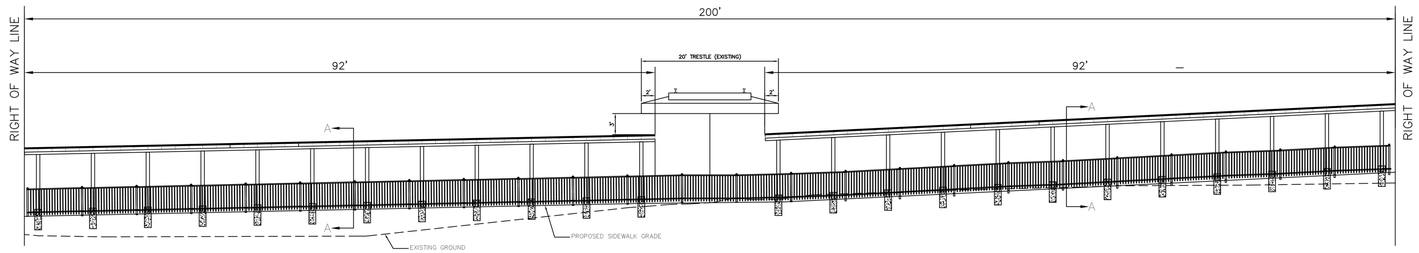

ELEVATION VIEW

RAILROAD CROSSING
(NOT TO SCALE)

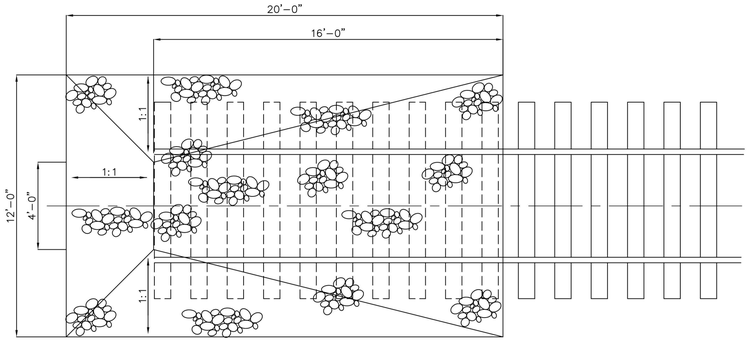

PLAN

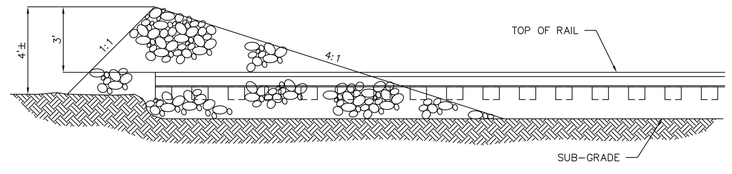

SECTION

EARTH MOUND CAR STOP DETAIL
(NOT TO SCALE)

EXHIBIT A

NOTICE TO DRAWING HOLDER

NEEL-SCHAFFER, INC., HEREINAFTER REFERRED TO AS THE ENGINEER HAS PREPARED AND FURNISHED THIS DRAWING TO THE OWNER FOR USE ON THIS PROJECT ONLY. THIS DRAWING SHOULD NOT BE USED ON EXTENSIONS OF THIS PROJECT OR ON ANY OTHER PROJECT. ANY REUSE OF THIS DRAWING, WITHOUT WRITTEN VERIFICATION OR ADAPTATION BY THE ENGINEER, SHALL BE AT THE REUSER'S SOLE RISK AND THE REUSER SHALL INDEMNIFY AND HOLD HARMLESS THE ENGINEER FROM ALL CLAIMS, DAMAGES, LOSSES AND EXPENSES, INCLUDING ATTORNEY'S FEES ARISING OUT OF OR RESULTING THEREFROM.

REVISIONS			
NO.	DATE	BY	DESCRIPTION

DRAWING INFORMATION	
N-S PROJECT NO.: 8933.001	
SCALE: NONE	
SURVEYED BY:	
DSGN: ZA	DATE: 06/29/2012
DRWN: JSB	DATE: 06/29/2012
CHKD:	DATE:
QA/QC:	DATE:

SHARED USE PATHWAY FROM NEWMAN-BUSCHMAN NEIGHBORHOOD TO CHAIN PARK

CITY OF HATTIESBURG
FORREST COUNTY, MS

NEEL-SCHAFFER
Solutions you can build upon

EXHIBIT 3
DETAILS

WORKING NUMBER:	DRAWING NUMBER:
4022-010	3

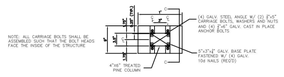

TYPICAL COLUMN ASSEMBLY DETAIL – PLAN

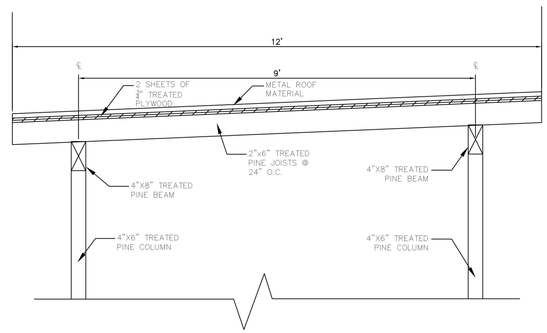

NOTES:

1. ALL EXPOSED STEEL SHALL RECEIVE TWO COATS OF RED OXIDE PAINT.
2. ALL WOOD SHALL RECEIVE TWO COATS OF THOMPSON WATER SEALER OR APPROVED EQUAL PRIOR TO THE COMPLETION OF CONSTRUCTION.
3. ALL WOOD MATERIALS SHALL BE TREATED SOUTHERN YELLOW PINE LUMBER OR APPROVED EQUAL.
4. ALL WOOD MEMBERS SHALL BE PRETREATED PRIOR TO CONSTRUCTION AS PER MANUFACTURER'S SPECIFICATIONS.
5. ALL CONCRETE PIERS SHALL HAVE A RUBBED FINISH.
6. ALL FASTENERS SHALL BE GALV. SELF-COUNTERSINKING SCREWS UNLESS OTHERWISE NOTED OR APPROVED EQUAL.

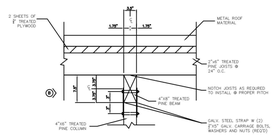

TYPICAL BEAM CONNECTION DETAIL "A"

SCALE: 1" = 6"

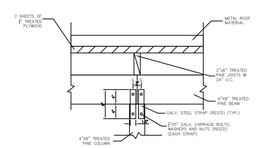

TYPICAL BEAM CONNECTION DETAIL "B"

SCALE: 1" = 6"

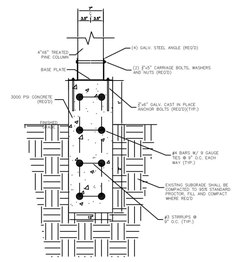

CONCRETE FOOTING DETAIL SECTION "C-C"

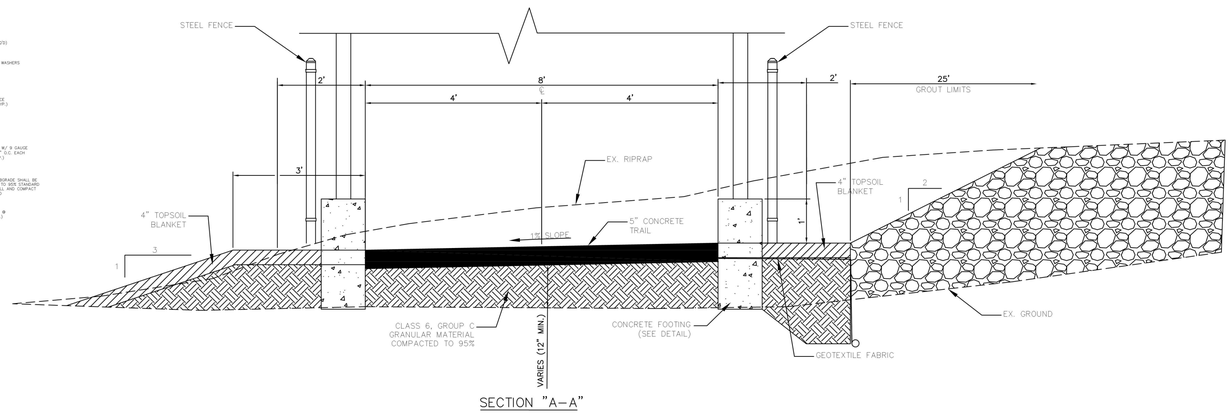

SECTION "A-A"

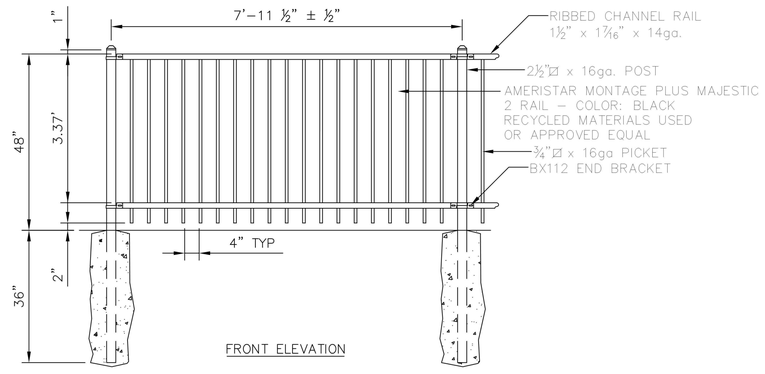

ORNAMENTAL STEEL FENCING DETAIL

EXHIBIT A

NOTICE TO DRAWING HOLDER

NEEL-SCHAFFER, INC., HEREINAFTER REFERRED TO AS THE ENGINEER HAS PREPARED AND FURNISHED THIS DRAWING TO THE OWNER FOR USE ON THIS PROJECT ONLY. THIS DRAWING SHOULD NOT BE USED ON EXTENSIONS OF THIS PROJECT OR ON ANY OTHER PROJECT. ANY REUSE OF THIS DRAWING, WITHOUT WRITTEN VERIFICATION OR ADAPTATION BY THE ENGINEER, SHALL BE AT THE REUSER'S SOLE RISK AND THE REUSER SHALL INDEMNIFY AND HOLD HARMLESS THE ENGINEER FROM ALL CLAIMS, DAMAGES, LOSSES AND EXPENSES, INCLUDING ATTORNEY'S FEES ARISING OUT OF OR RESULTING THEREFROM.

REVISIONS			
NO.	DATE	BY	DESCRIPTION

DRAWING INFORMATION	
N-S PROJECT NO.: 8933.001	
SCALE: NONE	
SURVEYED BY:	
DSGN: ZA	DATE: 06/29/2012
DRWN: JSB	DATE: 06/29/2012
CHKD:	DATE:
QA/QC:	DATE:

SHARED USE PATHWAY FROM NEWMAN-BUSCHMAN NEIGHBORHOOD TO CHAIN PARK

CITY OF HATTIESBURG
FORREST COUNTY, MS

NEEL-SCHAFFER
Solutions you can build upon

EXHIBIT 4
DETAILS

WORKING NUMBER:	DRAWING NUMBER:
4022-010	4

EXHIBIT B

FORCE ACCOUNT ESTIMATE

Work to be Performed By:	Alabama Great Southern Railroad Company
For the Account of:	City of Hattiesburg
Project Description:	Pedestrain Trail Construction Underneath Leaf River Bridge
Location:	Hattiesburg, Forrest County Mississippi
Project No.:	4022-010
Milepost:	NO-84.5
Date:	May 17, 2013
File:	BR0011777

SUMMARY

ITEM A - Preliminary Engineering		1,512
ITEM B - Construction Engineering		2,789
ITEM C - Accounting		1,269
ITEM D - Flagging Services		6,430
ITEM E - Communications Changes		0
ITEM F - Signal & Electrical Changes		0
ITEM G - Track Work		0
ITEM H - T-Cubed		0
GRAND TOTAL	**$**	**12,000**

ITEM A - Preliminary Engineering

(Review plans and special provisions,
prepare estimates, etc.)

Labor:	10 Hours @ $60 / hour=	600
Labor Additives:		472
Travel Expenses:		440
Services by Contract Engineer:		0
NET TOTAL - ITEM A	$	1,512

EXHIBIT B

ITEM B - Construction Engineering

(Coordinate Railway construction activities,
review contractor submittals, etc.)

Labor:	20 Hours @ $60 / hour=		1,200
Labor Additives:			943
Travel Expenses:			646
Services by Contract Engineer:			0
	NET TOTAL - ITEM B	$	2,789

ITEM C - Administration

Agreement Construction, Review and/or Handling:			1,000
Accounting Hours (Labor):	5 Hours @ $30 / hour=		150
Accounting Additives:			119
	NET TOTAL - ITEM C	$	1,269

ITEM D - Flagging Services

(During construction on, over,
under, or adjacent to the track.)

Labor:	Flagging Foreman		
	10 days @ 190.00 per day=		1,900
	(based on working 8 hours/day)		
Labor Additive:			3,530
Travel Expenses, Meals & Lodging:			
	10 days @ $100/day=		1,000
	NET TOTAL - ITEM D	$	6,430

ITEM E - Communications Changes

Material:		0
Labor:		0
Purchase Services:		0
Subsistence:		0
Additive:		0
NET TOTAL - ITEM E	$	-

EXHIBIT B

ITEM F - Signal & Electrical Changes

Material:	0
Labor:	0
Purchase Services:	0
Other:	0
NET TOTAL - ITEM F	$ -

ITEM G - Track Work

Material:	0
Labor:	0
Additive:	0
Purchase Services:	0
NET TOTAL - ITEM G	$ -

ITEM H - T-CUBED

Lump Sum $ -

NOTES

1. For all groups of CONTRACT employees, the composite labor surcharge rate used in this estimate (including insurance) is **185.81%**. Self Insurance - Public Liability Property Damage is estimated at 16.00%. Work will be billed at actual current audited rate in effect at the time the services are performed.

2. For all groups of NON-CONTRACT employees, the composite labor surcharge rate used in this estimate (including insurance is **78.59%**. Self Insurance - Public Liability Property Damage is estimated at 16.00%. Work will be billed at actual current audited rate in effect at the time the services are performed.

3. All applicable salvage items due the Department will be made available to it at the jobsite for its disposal.

4. The Force Account Estimate is valid for one (1) year after the date of the estimate (05/17/2013). If the work is not performed within this time frame the Railway may revise the estimate to (1) include work not previously indicated as necessary and (2) reflect changes in cost to perform the force account work.

EXHIBIT C

Norfolk Southern – Special Provisions for Protection of Railway Interest

1. AUTHORITY OF RAILROAD ENGINEER AND DEPARTMENT ENGINEER:

   The authorized representative of the Railroad Company, hereinafter referred to as Railroad Engineer, shall have final authority in all matters affecting the safe maintenance of Railroad traffic of his Company including the adequacy of the foundations and structures supporting the Railroad tracks. For Public Projects impacting Norfolk Southern, the Public Projects Engineer will serve as the Railroad Engineer.

   The authorized representative of the Department, hereinafter referred to as the Department Engineer, shall have authority over all other matters as prescribed herein and in the Project Specifications.

2. NOTICE OF STARTING WORK:

   A. Department's Prime contractor shall not commence any work on railroad rights-of-way until he has complied with the following conditions:

      1. Given the Railroad written notice in electronic format to the Railroad Engineer, with copy to the Department Engineer who has been designated to be in charge of the work, at least ten days in advance of the date he proposes to begin work on Railroad rights-of-way.

      2. Obtained written approval from the Railroad of Railroad Protective Liability Insurance coverage as required by paragraph 14 herein. It should be noted that Railroad Company does not accept notation of Railroad Protective insurance on a certificate of liability insurance form or Binders as Railroad Company must have the full original countersigned policy. Further, please note that mere receipt of the policy is not the only issue but review for compliance. Due to the number of projects system-wide, it typically takes a minimum of 30-45 days for Railroad Company to review.

      3. Obtained Railroad's Flagging Services as required by paragraph 7 herein.

      4. Obtained written authorization from the Railroad to begin work on Railroad rights-of-way, such authorization to include an outline of specific conditions with which he must comply.

      5. Furnished a schedule for all work within the Railroad rights-of-way as required by paragraph 7.B.1.

   B. The Railroad's written authorization to proceed with the work shall include the names, addresses, and telephone numbers of the Railroad's representatives who are to be notified as hereinafter required. Where more than one representative is designated, the area of responsibility of each representative shall be specified.

3. INTERFERENCE WITH RAILROAD OPERATIONS:

   A. The Contractor shall so arrange and conduct his work that there will be no interference with Railroad operations, including train, signal, telephone and telegraphic services, or damage to the

property of the Railroad Company or to poles, wires, and other facilities of tenants on the rights-of-way of the Railroad Company. Whenever work is liable to affect the operations or safety of trains, the method of doing such work shall first be submitted to the Railroad Engineer for approval, but such approval shall not relieve the Contractor from liability. Any work to be performed by the Contractor which requires flagging service or inspection service shall be deferred by the Contractor until the flagging service or inspection service required by the Railroad is available at the job site.

B. Whenever work within Railroad rights-of-way is of such a nature that impediment to Railroad operations such as use of runaround tracks or necessity for reduced speed is unavoidable, the Contractor shall schedule and conduct his operations so that such impediment is reduced to the absolute minimum.

C. Should conditions arising from, or in connection with the work, require that immediate and unusual provisions be made to protect operations and property of the Railroad, the Contractor shall make such provisions. If in the judgment of the Railroad Engineer, or in his absence, the Railroad's Division Engineer, such provisions is insufficient, either may require or provide such provisions as he deems necessary. In any event, such unusual provisions shall be at the Contractor's expense and without cost to the Railroad or the Department.

D. "One Call" Services do not locate buried railroad utilities. The contractor shall contact the railroad's representative 2 days in advance of work at those places where excavation, pile driving, or heavy loads may damage railroad underground facilities. Upon request from the contractor or agency, railroad forces will locate and paint mark or flag railroad underground facilities. The contractor shall avoid excavation or other disturbances of these facilities. If disturbance or excavation is required near a buried railroad facility, the contractor shall coordinate with the railroad to have the facility potholed manually with careful hand excavation. The facility shall be protected by the contractor during the course of the disturbance under the supervision and direction of the railroad representative.

4. TRACK CLEARANCES:

A. The minimum track clearances to be maintained by the Contractor during construction are shown on the Project Plans. If temporary clearances are not shown on the project plans, the following criteria shall govern the use of falsework and formwork above or adjacent to operated tracks.

1. A minimum vertical clearance of 22'-0" above top of highest rail shall be maintained at all times.

2. A minimum horizontal clearance of 13'-0" from centerline of tangent track or 14'-0" from centerline of curved track shall be maintained at all times. Additional horizontal clearance may be required in special cases to be safe for operating conditions. This additional clearance will be as determined by the Chief Engineer Bridges & Structures

3. All proposed temporary clearances which are less than those listed above must be submitted to the Chief Engineer Bridges & Structures for approval prior to construction and must also be authorized by the regulatory body of the State if less than the legally prescribed clearances.

4. The temporary clearance requirements noted above shall also apply to all other physical obstructions including, but not limited to: stockpiled materials, parked equipment, placement or driving of piles, and bracing or other construction supports.

B. Before undertaking any work within Railroad right-of-way, and before placing any obstruction over any track, the Contractor shall:

1. Notify the Railroad's representative at least 72 hours in advance of the work.

2. Receive assurance from the Railroad's representative that arrangements have been made for flagging service as may be necessary.

3. Receive permission from the Railroad's representative to proceed with the work.

4. Ascertain that the Department Engineer has received copies of notice to the Railroad and of the Railroad's response thereto.

5. CONSTRUCTION PROCEDURES:

A. General:

1. Construction work and operations by the Contractor on Railroad property shall be:

a. Subject to the inspection and approval of the Railroad or their designated Construction Engineering Representative.

b. In accord with the Railroad's written outline of specific conditions.

c. In accord with the Railroad's general rules, regulations and requirements including those relating to safety, fall protection and personal protective equipment.

d. In accord with these Special Provisions.

2. Submittal Requirements

a. The contractor shall submit all construction related correspondence and submittals electronically to the Railroad Engineer.

b. The contractor shall allow for 30 days for the Railroad's review and response.

c. All work in the vicinity of the Railroad's property that has the potential to affect the Railroad's train operations or disturb the Railroad's Property must be submitted and approved by the Railroad prior to work being performed.

d. All submittals and calculations must be signed and sealed by a registered engineer licensed in the state of the project work.

e. All submittals shall first be approved by the Department Engineer and the Railroad Engineer, but such approval shall not relieve the Contractor from liability.

f. For all construction projects, the following submittals, but not limited to those listed below, shall be provided for review and approval when applicable:

i. General Means and Methods
ii. Roadway Protection
iii. Construction Excavation & Shoring
iv. Pipe, Culvert, & Tunnel Installations
v. Demolition Procedure
vi. Erection & Hoisting Procedure
vii. Debris Shielding or Containment
viii. Blasting
ix. Formwork for the bridge deck, diaphragms, overhang brackets, and protective platforms
x. Bent Cap Falsework. A lift plan will be required if the contractor want to move the falsework over the tracks.

g. For Undergrade Bridges (Bridges carrying the Railroad) the following submittals in addition to those listed above shall be provided for review and approval:

i. Shop Drawings
ii. Bearing Shop Drawings and Material Certifications
iii. Concrete Mix Design
iv. Structural Steel, Rebar, and/or Strand Certifications
v. 28 day Cylinder Test for Concrete Strength
vi. Waterproofing Material Certification
vii. Test Reports for Fracture Critical Members
viii. Foundation Construction Reports

Fabrication may not begin until the Railroad has approved the required shop drawings.

h. The Contractor shall include in all submissions a detailed narrative indicating the progression of work with the anticipated timeframe to complete each task. Work will not be permitted to commence until the Contractor has provided the Railroad with a satisfactory plan that the project will be undertaken without scheduling, performance or safety related issues. Submission shall also provide a listing of the anticipated equipment to be used, the location of all equipment to be used and insure a contingency plan of action is in place should a primary piece of equipment malfunction.

B. Roadway Protection

1. The Contractor shall submit the proposed roadway protection system detailing the specific filter fabric and anchorage system to be used during all construction activities.

2. The roadway protection is to extend 25’ beyond the proposed limit of work, be installed at the start of the project and be continuously maintained to prevent all contaminants from entering the ballast section of all tracks for the entire duration of the project.

C. Excavation:

1. The subgrade of an operated track shall be maintained with edge of berm at least 10'-0" from centerline of track and not more than 24- inches below top of rail. Contractor will not be required to make existing section meet this specification if substandard, in which case existing section will be maintained.

2. Additionally, the Railroad will require the installation of an OSHA approved handrail and orange construction safety fencing for all excavations of the Railroad right-of-way.

D. Excavation for Structures and Shoring Protection:

1. The Contractor will be required to take special precaution and care in connection with excavating and shoring pits, and in driving piles or sheeting for footings adjacent to tracks to provide adequate lateral support for the tracks and the loads which they carry, without disturbance of track alignment and surface, and to avoid obstructing track clearances with working equipment, tools or other material.

2. All plans and calculations for shoring shall be prepared and signed by a Registered Professional Engineer, licensed in the state of the proposed project, in accordance with Norfolk Southern's Guidelines for Design of Grade Separation Structures, Section 1 – Overhead Grade Separation Design Criteria, subsection 4.E Construction Excavation. The Registered Professional Engineer will be responsible for the accuracy for all controlling dimensions as well as the selection of soil design values which will accurately reflect the actual field conditions.

3. The contractor shall provide a detailed installation and removal plan of the shoring components. Any component that will be installed via the use of a crane or any other lifting device shall be subject to the guidelines outlined in section 5.G.

4. The contractor shall be required to survey the track(s) and railroad embankment and provide a cross section of the proposed excavation in relation to the tracks.

5. Calculations for the proposed shoring should include deflection calculations. The maximum deflection for excavations within 18'-0" of the centerline of the nearest track shall be 3/8". For all other cases, the max deflection shall not exceed ½".

6. Additionally, the Railroad will require the installation of an OSHA approved handrail and orange construction safety fencing for all excavations of the Railroad right-of-way.

E. Pipe, Culvert, & Tunnel Installations

a. Pipe, Culvert, & Tunnel Installations shall be in accordance with the "Specifications for Pipeline Occupancy of Norfolk Southern Corporation Property (NSCE-8)."

F. Demolition Procedure

1. General

a. Demolition plans are required for all spans over the track(s), for all spans adjacent to the track(s), if located on (or partially on) Railroad right-of-way; and in all situations where cranes will be situated on, over, or adjacent to Railroad

right-of-way and within a distance of boom length plus 15'-0" from the centerline of track.

b. Railroad tracks and other railroad property must be protected from damage during the procedure.

c. A pre-demolition meeting shall be conducted with the Department, the Railroad Engineer or their representative, and the key contractor personnel prior to the start of the demolition procedure.

d. The Railroad Engineer or his designated representative must be present at the site during the entire demolition procedure period.

e. Existing, obsolete, bridge piers shall be removed to a sufficient depth below grade to enable restoration of the existing/proposed track ditch, but in co case less than 2'-0" below final grade.

2. Submittal Requirements

a. In addition to the submittal requirements outlined in Section 5.A.2, the contractor shall submit the following for approval by the Railroad Engineer:

i. A plan showing the location of cranes, horizontally and vertically, operating radii, with delivery or disposal locations shown. The location of all tracks and other railroad facilities as well as all obstructions such as wire lines, poles, adjacent structures, etc. must also be shown.

ii. Rating sheets showing cranes or lifting devices to be adequate for 150% of the actual weight of the pick, including all rigging components. A complete set of crane charts, including crane, counterweight, and boom nomenclature is to be submitted. Safety factors that may have been "built-in" to the crane charts are not to be considered when determining the 150% factor of safety.

iii. Plans and computations showing the weight of the pick must be submitted. Calculations shall be made from plans of the existing structure showing complete and sufficient details with supporting data for the demolition the structure. If plans do not exist, lifting weights must be calculated from field measurements. The field measurements are to be made under the supervision of the Registered Professional Engineer submitting the procedure and calculations.

iv. The contractor shall provide a sketch of all rigging components from the crane's hook block to the beam. Catalog cuts or information sheets of all rigging components with their lifting capacities shall be provided. All rigging must be adequate for 150% of the actual weight of the pick. Safety factors that may have been "built-in" to the rating charts are not to be considered when determining the 150% factor of safety. All rigging components shall be clearly identified and tagged with their rated lifting capacities. The position of the rigging in the

field shall not differ from what is shown on the final plan without prior review from the Department and the Railroad.

v. A complete demolition procedure, including the order of lifts, time required for each lift, and any repositioning or re-hitching of the crane or cranes.

vi. Design and supporting calculations for the temporary support of components, including but not limited to the stability of the superstructure during the temporary condition, temporary girder tie-downs and falsework.

3. Overhead Demolition Debris Shield

a. The demolition debris shield shall be installed prior to the demolition of the bridge deck or other relevant portions of the superstructure over the track area to catch all falling debris.

b. The demolition debris shield shall provide a minimum vertical clearance as specified in Section 4.A.1 or maintain the existing vertical clearance if the existing clearance is less than that specified in Section 4.A.1.

c. The Contractor shall include the demolition debris shield installation/removal means and methods as part of the proposed Demolition procedure submission.

d. The contractor shall submit the demolition debris shield design and supporting calculations for approval by the Railroad Engineer

e. The demolition debris shield shall have a minimum design load of 50 pounds per square foot plus the weight of the equipment, debris, personnel, and other loads to be carried.

f. The Contractor shall include the proposed bridge deck removal procedure in its demolition means and methods and shall verify that the size and quantity of the demolition debris generated by the procedure does not exceed the shield design loads.

g. The contractor shall clean the demolition debris shield daily or more frequently as dictated either by the approved design parameters or as directed by the Railroad Engineer.

4. Vertical Demolition Debris Shield

a. A vertical demolition debris shield may be required for substructure removals in close proximity to the Railroad's track and other facilities, as determined by the Railroad Engineer.

G. Erection & Hoisting Procedures

1. General

a. Erection plans are required for all spans over the track(s), for all spans adjacent to the track(s), if located on (or partially on) Railroad right-of-way; and in all situations where cranes will be situated on, over, or adjacent to Railroad right-of-way and within a distance of boom length plus 15'-0" from the centerline of track.

b. Railroad tracks and other railroad property must be protected from damage during the erection procedure.

c. A pre-erection meeting shall be conducted with the Department, the Railroad Engineer or their representative, and the key contractor personnel prior to the start of the erection procedure.

d. The Railroad Engineer or his designated representative must be present at the site during the entire erection procedure period.

e. For field splices located over Railroad property, a minimum of 50% of the holes for each connection shall be filled with bolts or pins prior to releasing the crane. A minimum of 50% of the holes filled shall be filled with bolts. All bolts must be appropriately tightened.

2. Submittal Requirements

a. In addition the submittal requirements outlined in Section 5.A.2, the contract shall submit the following for approval by the Railroad Engineer:

i. As-built beam seat elevations - All as-built bridge seats and top of rail elevations shall be furnished to the Railroad Engineer for review and verification at least 30 days in advance of the erection, to ensure that minimum vertical clearances as approved in the plans will be achieved.

ii. A plan showing the location of cranes, horizontally and vertically, operating radii, with delivery or staging locations shown. The location of all tracks and other railroad facilities as well as all obstructions such as wire lines, poles, adjacent structures, etc. must also be shown.

iii. Rating sheets showing cranes or lifting devices to be adequate for 150% of the actual weight of the pick, including all rigging components. A complete set of crane charts, including crane, counterweight, and boom nomenclature is to be submitted. Safety factors that may have been "built-in" to the crane charts are not to be considered when determining the 150% factor of safety.

iv. Plans and computations showing the weight of the pick must be submitted. Calculations shall be made from plans of the proposed structure showing complete and sufficient details with supporting data for the erection of the structure. If plans do not exist, lifting weights must be calculated from field measurements. The field measurements are to be made under the supervision of the Registered Professional Engineer submitting the procedure and calculations.

v. The contractor shall provide a sketch of all rigging components from the crane's hook block to the beam. Catalog cuts or information sheets of all rigging components with their lifting capcities shall be provided. All rigging must be adequate for 150% of the actual weight of the pick. Safety factors that may have been "built-in" to the rating charts are not to be considered when determining the 150% factor of safety. All rigging components shall be clearly identified and tagged with their rated lifting capacities. The position of the rigging in the field shall not differ from what is shown on the final plan without prior review from the Department and the Railroad.

vi. A complete erection procedure, including the order of lifts, time required for each lift, and any repositioning or re-hitching of the crane or cranes.

vii. Design and supporting calculations for the temporary support of components, including but not limited to temporary girder tie-downs and falsework.

H. Blasting:

1. The Contractor shall obtain advance approval of the Railroad Engineer and the Department Engineer for use of explosives on or adjacent to Railroad property. The request for permission to use explosives shall include a detailed blasting plan. If permission for use of explosives is granted, the Contractor will be required to comply with the following:

a. Blasting shall be done with light charges under the direct supervision of a responsible officer or employee of the Contractor and a licensed blaster.

b. Electric detonating fuses shall not be used because of the possibility of premature explosions resulting from operation of two-way radios.

c. No blasting shall be done without the presence of the Railroad Engineer or his authorized representative. At least 72 hours advance notice to the person designated in the Railroad's notice of authorization to proceed (see paragraph 5.E.2.B) will be required to arrange for the presence of an authorized Railroad representative and such flagging as the Railroad may require.

d. Have at the job site adequate equipment, labor and materials and allow sufficient time to clean up debris resulting from the blasting without delay to trains, as well as correcting at his expense any track misalignment or other damage to Railroad property resulting from the blasting as directed by the Railway's authorized representative. If his actions result in delay of trains, the Contractor shall bear the entire cost thereof.

e. The blasting contractor shall have a copy of the approved blasting plan on hand while on the site.

f. Explosive materials or loaded holes shall not be left unattended at the blast site.

g. A seismograph shall be placed on the track shoulder adjacent to each blast which will govern the peak particle velocity of two inches per second. Measurement shall also be taken on the ground adjacent to structures as designated by a qualified and independent blasting consultant. The Railroad reserves the option to direct the placement of additional seismographs at structures or other locations of concern, without regard to scaled distance.

h. After each blast, the blasting contractor shall provide a copy of their drill log and blast report, which includes number of holes, depth of holes, number of decks, type and pounds of explosives used per deck.

i. The Railroad may require top of rail elevations and track centers taken before, during and after the blasting and excavation operation to check for any track misalignment resulting from the Contractor's activities.

2. The Railroad representative will:

   a. Determine approximate location of trains and advise the Contractor the appropriate amount of time available for the blasting operation and clean up.

   b. Have the authority to order discontinuance of blasting if, in his opinion, blasting is too hazardous or is not in accord with these special provisions.

3. The Contractor must hire, at no expense to the Railroad, a qualified and independent blasting consultant to oversee the use of explosives. The blasting consultant will:

   a. Review the Contractor's proposed drilling and loading patterns, and with the blasting consultant's personnel and instruments, monitor the blasting operations.

   b. Confirm that the minimum amounts of explosives are used to remove the rock.

   c. Be empowered to intercede if he concludes that the Contractor's blasting operations are endangering the Railway.

   d. Submit a letter acknowledging that he has been engaged to oversee the entire blasting operation and that he approves of the blasting plan.

   e. Furnish copies of all vibration readings to the Railroad representative immediately after each blast. The representative will sign and date the seismograph tapes after each shot to verify the readings are for that specific shot.

   f. Advise the Railroad representative as to the safety of the operation and notify him of any modifications to the blasting operation as the work progresses.

4. The request for permission to use explosives on the Railroad's Right-of-Way shall include a blasting proposal providing the following details:

a. A drawing which shows the proposed blasting area, location of nearest hole and distance to Railway structures, all with reference to the centerline of track.

b. Hole diameter.

c. Hole spacing and pattern.

d. Maximum depth of hole.

e. Maximum number of decks per hole.

f. Maximum pounds of explosives per hole.

g. Maximum pounds of explosives per delay.

h. Maximum number of holes per detonation.

i. Type of detonator and explosives to be used. (Electronic detonating devices will not be permitted). Diameter of explosives if different from hole diameter.

j. Approximate dates and time of day when the explosives are to be detonated.

k. Type of flyrock protection.

l. Type and patterns of audible warning and all clear signals to be used before and after each blast.

m. A copy of the blasting license and qualifications of the person directly in charge of the blasting operation, including their name, address and telephone number.

n. A copy of the Authority's permit granting permission to blast on the site.

o. A letter from the blasting consultant acknowledging that he has been engaged to oversee the entire blasting operation and that he approves of the blasting plan.

p. In addition to the insurance requirements outlined in Paragraph 14, A certificate of insurance from the Contractor's insurer stating the amount of coverage for XCU (Explosive Collapse and Underground Hazard) insurance and that XCU Insurance is in force for this project.

q. A copy of the borings and Geotechnical information or report.

I. Track Monitoring

1. At the direction of the Railroad Engineer, any activity that has the potential to disturb the Railroad track structure may require the contractor to submit a detailed track monitoring program for approval by the Railroad Engineer.

2. The program shall specify the survey locations, the distance between the location points, and frequency of monitoring before, during, and after construction. Railroad reserves the right to modify the survey locations and monitoring frequency as necessary during the project.

3. The survey data shall be collected in accordance with the approved frequency and immediately furnished to the Railroad Engineer for analysis.

4. If any movement has occurred as determined by the Railroad Engineer, the Railroad will be immediately notified. Railroad, at its sole discretion, shall have the right to immediately require all contractor operations to be ceased and determine what corrective action is required. Any corrective action required by the Railroad or performed by the Railroad including the monitoring of corrective action of the contractor will be at project expense.

J. Maintenance of Railroad Facilities:

1. The Contractor will be required to maintain all ditches and drainage structures free of silt or other obstructions which may result from his operations and provide and maintain any erosion control measures as required. The Contractor will promptly repair eroded areas within Railroad rights-of-way and repair any other damage to the property of the Railroad or its tenants.

2. If, in the course of construction, it may be necessary to block a ditch, pipe or other drainage facility, temporary pipes, ditches or other drainage facilities shall be installed to maintain adequate drainage, as approved by NS. Upon completion of the work, the temporary facilities shall be removed and the permanent facilities restored.

3. All such maintenance and repair of damages due to the Contractor's operations shall be done at the Contractor's expense.

K. Storage of Materials and Equipment:

1. Materials and equipment shall not be stored where they will interfere with Railroad operations, nor on the rights-of-way of the Railroad Company without first having obtained permission from the Railroad Engineer, and such permission will be with the understanding that the Railroad Company will not be liable for damage to such material and equipment from any cause and that the Railroad Engineer may move or require the Contractor to move, at the Contractor's expense, such material and equipment.

2. All grading or construction machinery that is left parked near the track unattended by a watchman shall be effectively immobilized so that it cannot be moved by unauthorized persons. The Contractor shall protect, defend, indemnify and save Railroad, and any associated, controlled or affiliated corporation, harmless from and against all losses, costs, expenses, claim or liability for loss or damage to property or the loss of life or personal injury, arising out of or incident to the Contractor's failure to immobilize grading or construction machinery.

L. Cleanup:

1. Upon completion of the work, the Contractor shall remove from within the limits of the Railroad rights-of-way, all machinery, equipment, surplus materials, falsework, rubbish or temporary buildings of the Contractor, and leave said rights-of-way in a neat condition satisfactory to the Chief Engineer of the Railroad or his authorized representative.

6. DAMAGES:

   A. The Contractor shall assume all liability for any and all damages to his work, employees, servants, equipment and materials caused by Railroad traffic.

   B. Any cost incurred by the Railroad for repairing damages to its property or to property of its tenants, caused by or resulting from the operations of the Contractor, shall be paid directly to the Railroad by the Contractor.

7. FLAGGING SERVICES:

   A. Requirements:

      1. Flagging services will not be provided until the contractor's insurance has been reviewed & approved by the Railroad.

      2. Under the terms of the agreement between the Department and the Railroad, the Railroad has sole authority to determine the need for flagging required to protect its operations. In general, the requirements of such services will be whenever the Contractor's personnel or equipment are or are likely to be, working on the Railroad's right-of-way, or across, over, adjacent to, or under a track, or when such work has disturbed or is likely to disturb a railroad structure or the railroad roadbed or surface and alignment of any track to such extent that the movement of trains must be controlled by flagging.

      3. Normally, the Railroad will assign one flagman to a project; but in some cases, more than one may be necessary, such as yard limits where three (3) flagmen may be required. However, if the Contractor works within distances that violate instructions given by the Railroad's authorized representative or performs work that has not been scheduled with the Railroad's authorized representative, a flagman or flagmen may be required full time until the project has been completed.

   B. Scheduling and Notification:

      1. The Contractor's work requiring railroad flagging should be scheduled to limit the presence of a flagman at the site to a maximum of 50 hours per week. The Contractor shall receive Railroad approval of work schedules requiring a flagman's presence in excess of 40 hours per week.

      2. Not later than the time that approval is initially requested to begin work on Railroad right-of-way, Contractor shall furnish to the Railroad and the Department a schedule for all work required to complete the portion of the project within Railroad right-of-way and arrange for a job site meeting between the Contractor, the Department, and the Railroad's authorized representative. Flagman or Flagmen may not be provided until the job site meeting has been conducted and the Contractor's work scheduled.

      3. The Contractor will be required to give the Railroad representative at least 10 working days of advance written notice of intent to begin work within Railroad right-of-way in accordance with this special provision. Once begun, when such work is then suspended at any time, or for any reason, the Contractor will be required to

give the Railroad representative at least 3 working days of advance notice before resuming work on Railroad right-of-way. Such notices shall include sufficient details of the proposed work to enable the Railroad representative to determine if flagging will be required. If such notice is in writing, the Contractor shall furnish the Engineer a copy; if notice is given verbally, it shall be confirmed in writing with copy to the Engineer. If flagging is required, no work shall be undertaken until the flagman, or flagmen are present at the job site. It may take up to 30 days to obtain flagging initially from the Railroad. When flagging begins, the flagman is usually assigned by the Railroad to work at the project site on a continual basis until no longer needed and cannot be called for on a spot basis. If flagging becomes unnecessary and is suspended, it may take up to 30 days to again obtain from the Railroad. Due to Railroad labor agreements, it is necessary to give 5 working days notice before flagging service may be discontinued and responsibility for payment stopped.

4. If, after the flagman is assigned to the project site, an emergency arises that requires the flagman's presence elsewhere, then the Contractor shall delay work on Railroad right-of-way until such time as the flagman is again available. Any additional costs resulting from such delay shall be borne by the Contractor and not the Department or Railroad.

C. Payment:

1. The Department will be responsible for paying the Railroad directly for any and all costs of flagging which may be required to accomplish the construction.

2. The estimated cost of flagging is current rate per day based on a 10-hour work day. This cost includes the base pay for the flagman, overhead, and includes a per diem charge for travel expenses, meals and lodging. The charge to the Department by the Railroad will be the actual cost based on the rate of pay for the Railroad's employees who are available for flagging service at the time the service is required.

3. Work by a flagman in excess of 8 hours per day or 40 hours per week, but not more than 12 hours a day will result in overtime pay at 1 and 1/2 times the appropriate rate. Work by a flagman in excess of 12 hours per day will result in overtime at 2 times the appropriate rate. If work is performed on a holiday, the flagging rate is 2 and 1/2 times the normal rate.

4. Railroad work involved in preparing and handling bills will also be charged to the Department. Charges to the Department by the Railroad shall be in accordance with applicable provisions of Subchapter B, Part 140, Subpart I and Subchapter G, Part 646, Subpart B of the Federal-Aid Policy Guide issued by the Federal Highway Administration on December 9, 1991, including all current amendments. Flagging costs are subject to change. The above estimates of flagging costs are provided for information only and are not binding in any way.

D. Verification:

1. Railroad's flagman will electronically enter flagging time via Railroad's electronic billing system. Any complaints concerning flagging must be resolved in a timely manner. If the need for flagging is questioned, please contact Railroad's System Engineer - Public Improvements. All verbal complaints will be confirmed in writing by the Contractor within 5 working days with a copy to the Department's

Engineer. Address all written correspondence electronically to Railroad's System Engineer - Public Improvements:

2. The Railroad flagman assigned to the project will be responsible for notifying the Department Engineer upon arrival at the job site on the first day (or as soon thereafter as possible) that flagging services begin and on the last day that he performs such services for each separate period that services are provided. The Department Engineer will document such notification in the project records. When requested, the Department Engineer will also sign the flagman's diary showing daily time spent and activity at the project site.

8. HAUL ACROSS RAILROAD:

   A. Where the plans show or imply that materials of any nature must be hauled across a Railroad, unless the plans clearly show that the Department has included arrangements for such haul in its agreement with the Railroad, the Contractor will be required to make all necessary arrangements with the Railroad regarding means of transporting such materials across the Railroad. The Contractor or Agency will be required to bear all costs incidental to such crossings whether services are performed by his own forces or by Railroad personnel.

   B. No crossing may be established for use of the Contractor for transporting materials or equipment across the tracks of the Railroad Company unless specific authority for its installation, maintenance, necessary watching and flagging thereof and removal, until a temporary private crossing agreement has been executed between the Contractor and Railroad. The approval process for an agreement normally takes 90-days.

9. WORK FOR THE BENEFIT OF THE CONTRACTOR:

   A. All temporary or permanent changes in wire lines or other facilities which are considered necessary to the project are shown on the plans; included in the force account agreement between the Department and the Railroad or will be covered by appropriate revisions to same which will be initiated and approved by the Department and/or the Railroad.

   B. Should the Contractor desire any changes in addition to the above, then he shall make separate arrangements with the Railroad for same to be accomplished at the Contractor's expense.

10. COOPERATION AND DELAYS:

   A. It shall be the Contractor's responsibility to arrange a schedule with the Railroad for accomplishing stage construction involving work by the Railroad or tenants of the Railroad. In arranging his schedule he shall ascertain, from the Railroad, the lead time required for assembling crews and materials and shall make due allowance therefore.

   B. No charge or claim of the Contractor against either the Department or the Railroad Company will be allowed for hindrance or delay on account of railway traffic; any work done by the Railway Company or other delay incident to or necessary for safe maintenance of railway traffic or for any delays due to compliance with these special provisions.

11. TRAINMAN'S WALKWAYS:

   A. Along the outer side of each exterior track of multiple operated track, and on each side of single operated track, an unobstructed continuous space suitable for trainman's use in walking

along trains, extending to a line not less than 10 feet from centerline of track, shall be maintained. Any temporary impediments to walkways and track drainage encroachments or obstructions allowed during work hours while Railway's protective service is provided shall be removed before the close of each work day. If there is any excavation near the walkway, a handrail, with 10'-0" minimum clearance from centerline of track, shall be placed and must conform to AREMA and/or FRA standards.

12. GUIDELINES FOR PERSONNEL ON RAILROAD RIGHT-OF-WAY:

A. The Contractor and/or the Agency's personnel authorized to perform work on Norfolk Southern's property as specified in Section 2 above are not required to complete Norfolk Southern Roadway Worker Protection Training; However the Contractor and the Agency's personnel must be familiar with Norfolk Southern's standard operating rules and guidelines, should conduct themselves accordingly, and may be removed from the property for failure to follow these guidelines.

B. All persons shall wear hard hats. Appropriate eye and hearing protection must be used. Working in shorts is prohibited. Shirts must cover shoulders, back and abdomen. Working in tennis or jogging shoes, sandals, boots with high heels, cowboy and other slip-on type boots is prohibited. Hard-sole, lace-up footwear, zippered boots or boots cinched up with straps which fit snugly about the ankle are adequate. Wearing of safety boots is strongly recommended. In the vicinity of at-grade crossings, it is strongly recommended that reflective vests be worn.

C. No one is allowed within 25' of the centerline of track without specific authorization from the flagman.

D. All persons working near track while train is passing are to lookout for dragging bands, chains and protruding or shifted cargo.

E. No one is allowed to cross tracks without specific authorization from the flagman.

F. All welders and cutting torches working within 25' of track must stop when train is passing.

G. No steel tape or chain will be allowed to cross or touch rails without permission from the Railroad.

13. GUIDELINES FOR EQUIPMENT ON RAILROAD RIGHT-OF-WAY:

A. No crane or boom equipment will be allowed to set up to work or park within boom distance plus 15' of centerline of track without specific permission from railroad official and flagman.

B. No crane or boom equipment will be allowed to foul track or lift a load over the track without flag protection and track time.

C. All employees will stay with their machines when crane or boom equipment is pointed toward track.

D. All cranes and boom equipment under load will stop work while train is passing (including pile driving).

E. Swinging loads must be secured to prevent movement while train is passing.

F. No loads will be suspended above a moving train.

G. No equipment will be allowed within 25' of centerline of track without specific authorization of the flagman.

H. Trucks, tractors or any equipment will not touch ballast line without specific permission from railroad official and flagman. Orange construction fencing may be required as directed.

I. No equipment or load movement within 25' or above a standing train or railroad equipment without specific authorization of the flagman.

J. All operating equipment within 25' of track must halt operations when a train is passing. All other operating equipment may be halted by the flagman if the flagman views the operation to be dangerous to the passing train.

K. All equipment, loads and cables are prohibited from touching rails.

L. While clearing and grubbing, no vegetation will be removed from railroad embankment with heavy equipment without specific permission from the Railroad Engineer and flagman.

M. No equipment or materials will be parked or stored on Railroad's property unless specific authorization is granted from the Railroad Engineer.

N. All unattended equipment that is left parked on Railroad property shall be effectively immobilized so that it cannot be moved by unauthorized persons.

O. All cranes and boom equipment will be turned away from track after each work day or whenever unattended by an operator.

P. Prior to performing any crane operations, the contractor shall establish a single point of contact for the Railroad flagman to remain in communication with at all times. Person must also be in direct contact with the individual(s) directing the crane operation(s).

14. INSURANCE:

A. In addition to any other forms of insurance or bonds required under the terms of the contract and specifications, the Prime Contractor will be required to carry insurance of the following kinds and amounts:

1. Commercial General Liability Insurance having a combined single limit of not less than $2,000,000 per occurrence for all loss, damage, cost and expense, including attorneys' fees, arising out of bodily injury liability and property damage liability during the policy period. Said policy shall include explosion, collapse, and underground hazard (XCU) coverage, shall be endorsed to name Railroad specified in item A.2.c. below both as the certificate holder and as an additional insured, and shall include a severability of interests provision.

2. Railroad Protective Liability Insurance having a combined single limit of not less than $2,000,000 each occurrence and $6,000,000 in the aggregate applying separately to each annual period. If the project involves track over which passenger trains operate, the insurance limits required are not less than a combined single limit of

$5,000,000 each occurrence and $10,000,000 in the aggregate applying separately to each annual period. Said policy shall provide coverage for all loss, damage or expense arising from bodily injury and property damage liability, and physical damage to property attributed to acts or omissions at the job site.

3. The standards for the Railroad Protective Liability Insurance are as follows:

    a. The insurer must be rated A- or better by A.M. Best Company, Inc.

    b. The policy must be written using one of the following combinations of Insurance Services Office ("ISO") Railroad Protective Liability Insurance Form Numbers:

        i. CG 00 35 01 96 and CG 28 31 10 93; or
        ii. CG 00 35 07 98 and CG 28 31 07 98; or
        iii. CG 00 35 10 01; or
        iv. CG 00 35 12 04.

    c. The named insured shall read:

        Norfolk Southern Railway Company
        Three Commercial Place
        Norfolk, Virginia 23510-2191
        Attn: Risk Management

    d. The description of operations must appear on the Declarations, must match the project description in this agreement, and must include the appropriate Department project and contract identification numbers.

    e. The job location must appear on the Declarations and must include the city, state, and appropriate highway name/number. NOTE: Do not include any references to milepost on the insurance policy.

    f. The name and address of the prime contractor must appear on the Declarations.

    g. The name and address of the Department must be identified on the Declarations as the "Involved Governmental Authority or Other Contracting Party."

    h. Other endorsements/forms that will be accepted are:

        i. Broad Form Nuclear Exclusion – Form IL 00 21
        ii. 30-day Advance Notice of Non-renewal or cancellation
        iii. Required State Cancellation Endorsement
        iv. Quick Reference or Index Form CL/IL 240

    i. Endorsements/forms that are NOT acceptable are:

        i. Any Pollution Exclusion Endorsement except CG 28 31
        ii. Any Punitive or Exemplary Damages Exclusion
        iii. Known injury or Damage Exclusion form CG 00 59

iv. Any Common Policy Conditions form
v. Any other endorsement/form not specifically authorized in item no. 2.h above.

B. If any part of the work is sublet, similar insurance, and evidence thereof as specified in A.1 above, shall be provided by or on behalf of the subcontractor to cover its operations on Railroad's right of way.

C. Prior to entry on Railroad right-of-way, the original Railroad Protective Liability Insurance Policy shall be submitted by the Prime Contractor to the Department at the address below for its review and transmittal to the Railroad. In addition, certificates of insurance evidencing the Prime Contractor's and any subcontractors' Commercial General Liability Insurance shall be issued to the Railroad and the Department at the addresses below, and forwarded to the Department for its review and transmittal to the Railroad. The certificates of insurance shall state that the insurance coverage will not be suspended, voided, canceled, or reduced in coverage or limits without (30) days advance written notice to Railroad and the Department. No work will be permitted by Railroad on its right-of-way until it has reviewed and approved the evidence of insurance required herein.

DEPARTMENT:
_____
_____
_____
_____

RAILROAD:
Risk Management
Norfolk Southern Railway Company
Three Commercial Place
Norfolk, Virginia 23510-2191

D. The insurance required herein shall in no way serve to limit the liability of Department or its Contractors under the terms of this agreement.

E. Insurance Submission Procedures

1. Norfolk Southern will only accept initial insurance submissions via US Mail or Overnight carrier to the address noted in C above. NS will NOT accept initial insurance submissions via email or faxes.

2. Norfolk Southern requires the following two (2) forms of insurance in the initial insurance submission to be submitted under a cover letter providing details of the project and contact information:

   a. The original or certified true copy of the railroad protective liability insurance policy.

   b. The contractor's commercial general, automobile, and workers' compensation liability insurance certificate of liability insurance evidencing a combined single limit of a minimum of $2M per occurrence of general and $1M per occurrence of automobile liability insurance naming Norfolk Southern Railway Company, Three Commercial Place, Norfolk, VA 23510 as the certificate holder and as an additional insured on both the general and automobile liability insurance policy.

3. Norfolk Southern does not accept notation of Railroad Protective insurance on a certificate of liability insurance form or Binders as Norfolk Southern must have the full original countersigned policy. Norfolk Southern understands that this can

typically take a minimum of 30-45 days to receive for review. Please also note that mere receipt is not the only issue but review for compliance, which Norfolk Southern has 10 business days from receipt to respond.

15. FAILURE TO COMPLY:

    A. In the event the Contractor violates or fails to comply with any of the requirements of these Special Provisions:

        1. The Railroad Engineer may require that the Contractor vacate Railroad property.

        2. The Engineer may withhold all monies due the Contractor on monthly statements.

    B. Any such orders shall remain in effect until the Contractor has remedied the situation to the satisfaction of the Railroad Engineer and the Engineer.

16. PAYMENT FOR COST OF COMPLIANCE:

    A. No separate payment will be made for any extra cost incurred on account of compliance with these special provisions. All such costs shall be included in prices bid for other items of the work as specified in the payment items.

17. PROJECT INFORMATION

    A. Date: _____
    B. NS File No.: _____
    C. NS Milepost: _____
    D. Department's Project No.: _____

THIS AGREEMENT, made and entered into by and between

THE ALABAMA GREAT SOUTHERN RAILWAY COMPANY, an Alabama corporation, hereinafter styled "Railway"; and

CITY OF HATTIESBURG, a municipality of the State of Mississippi, hereinafter referred to as "City":

WITNESSETH:

WHEREAS, CITY, at its own cost and expense, has found it necessary to construct a shared-use pathway within the right of way or property of Railway (hereinafter "Project"), in the vicinity of Railway Milepost NO-84.50, at or near **HATTIESBURG, Forrest County, Mississippi** located substantially as shown upon print of Drawing marked Exhibit A, attached hereto and made a part of this Agreement; and

WHEREAS, the Railroad is willing to permit the Project upon railroad right of way, but upon the terms and conditions hereinafter expressed and contained

NOW THEREFORE, the PARTIES HERETO agree as follows:

SECTION 1. Before this agreement shall be in force and effect, the plans shall meet the approval of the parties hereto, and upon such written approval shall become a part of this agreement by reference.

SECTION 2. The parties hereto shall construct or cause to be constructed, in substantial accordance with the approved plans, specifications and special provisions, the following items of work:

A. The following items shall be let in contract by CITY after competitive bidding as provided by law, at Project expense, subject to the provision of this agreement:

1. Grading, draining and paving the project, including constructing any necessary side drives and approaches.
2. Construction of structure to protect the public from any ballast or other debris falling from Railway right of way.
3. Erection of fencing needed to keep public off of Railway right of way.

CITY's work shall be awarded to a competent and experienced contractor(s) who has (have) adequate equipment, organization and finances, and Railway shall be notified of the contractor(s) receiving such award for all work affecting Railway's interest.

B. The following items shall be done or caused by Railway with its own forces, at Project expense, subject to the provisions of this agreement:

1. All temporary and permanent alterations or relocations of communication and signal wire lines, signals and railroad appurtenances on its right-of-way as may be necessitated by the Project

2. The furnishing of switchtenders, flagmen, watchmen and other protective services and devices to promote safety and insure continuity of train operation as may be necessary in connection with the work performed by Railway's forces and CITY's contractor(s).

3. Construction engineering inspection services and accounting

CITY to reimburse 100% of the Railway's actual cost for the force account work in connection with the Project, including but not limited to the expenditures herein expressly described. The cost of said items to be performed by Railway in connection with the Project has been included in Exhibit B attached and made a part hereof.

SECTION 3. Any work not specifically provided for in Section 2 shall be done by one of the parties hereto as may be mutually agreed upon from time to time during the progress of the work.

SECTION 4. No changes shall be made on any approved plans, specifications or special provisions by either party hereto without the consent of the other party, in writing.

SECTION 5. All work performed under this Agreement shall be in accordance with "Special Provisions For Protection Of Railway Interest," marked Exhibit C, which is attached hereto and made a part hereof by reference.

CITY will require its contractor(s) to use Railway personnel to protect railroad traffic made necessary or occasioned by his operations, as set forth in special provisions to be approved by the parties hereto, which are more specifically set for in "Exhibit C".

Railway agrees to furnish CITY's contractor(s) at Project expense, and CITY shall require its contractor(s) to use such switchtenders, flagmen, telegraph operators, pilots, watchmen or other protective services and devices, other than engineering personnel, as in the opinion of Railway are required to promote the safety and insure continuity of railroad traffic during the contractor(s) operations.

Railway agrees to bill CITY as part of its regular force account work the actual cost for such protective services and devices including the actual rate of pay, plus the amount paid for overtime, insurance, railroad retirement, vacation allowances, holidays, health and welfare, transportation, deadhead and turn around time, accounting and billing.

CITY agrees to reimburse Railway for said protective services and devices as a part of its regular force account work as set forth in this Agreement.

SECTION 6. Railway, to the extent that its title enables it so to do, and without warranty, hereby grants unto CITY and it's contractor the right to perform Project upon and adjacent to the right of way or property of Railway, at the aforedescribed location; RESERVING, however, unto Railway the right to continue to maintain, repair, renew and operate its railway and appurtenances, and to construct such additional tracks and other railway facilities, and to maintain, repair, renew and operate the same as in the judgment of Railway may be requisite; it being understood that if Railway elects or is required to construct any additional tracks or other structures or facilities thereon and shall find it necessary to disturb the Project or any portion of the development located within the limits of said right of way in so doing, CITY will, at CITY's own cost and expense, upon notice in writing so to do served upon it by Railway, make such changes to the Project or development as may be necessary to accommodate the work of Railway.

SECTION 7. The CITY shall have general charge of the engineering work on the Project, but Railway shall provide such engineering services as Railway may require. Nothing herein shall deny Railway the right to place inspectors on work being done on its property or facilities. The costs for such services shall be borne by CITY.

SECTION 8. Subsequent to the award of any contract(s), and before any work is started on this Project, a conference shall be held between the representatives of CITY, Railway, and the interested contractor(s), at a time and place as designated by CITY's representative, for the purpose of coordinating the work to be performed by the several parties, and at which time a schedule of operations will be adopted.

SECTION 9. CITY shall require its contractor(s) at all times to use all reasonable care and diligence and to cooperate with the officials of Railway in order to avoid accidents, damage or unnecessary delay to or interference with trains upon the tracks of Railway.

In the event that delays or difficulties arise in securing necessary approvals or in securing necessary rights of way or settling damages or damage claims which, in the opinion of CITY, render it impracticable to utilize funds from the current appropriation for the construction of the Project, CITY may serve formal notice of cancellation of this agreement upon Railway and this agreement shall, with the exception of the obligations set forth in the following sentence, become null and void. CITY shall reimburse Railway for all costs and expenses incurred by it at the request of CITY, on account of the Project prior to such cancellation and shall restore Railway's property to the condition existing prior to the initiation of the Project construction.

SECTION 10. CITY shall require the contractor(s), before entering upon Railway's right-of-way for performance of any construction work, or work preparatory thereto, to notify the authorized representative of Railway for the occupancy and use of Railway's right-of-way outside the limits of the structure, and to comply with his recommendations relative to the requirements for railroad clearances, operation and general safety regulations.

SECTION 11. CITY shall acquire or settle all property, property rights and all damages to property affected by the Project. The cost of said property, property rights and damages to property shall be included as part of the Project expense.

SECTION 12. Railway may bill CITY monthly or periodically for its force account work when cost exceeds $1,000.00. Progressive invoices may be submitted for work done during the previous month or period showing the portion of estimated cost completed. A final bill covering actual cost of work and showing all details shall be submitted to CITY within ninety (90) days of completion of said work. CITY shall pay all bills within sixty (60) days of receipt thereof. Final payment for all amounts due Railway shall be paid by CITY within sixty (60) days after the final audit has been made and approved.

SECTION 13. (a) To the extent permitted by the laws of Mississippi, CITY agrees to indemnify and hold Railway, and any other corporation controlling, controlled by or under common control with Railway, harmless from and against all loss, damage, liability or expense arising from injury or loss of life to any person or damage to any property while CITY is engaged in the work of constructing, improving, maintaining, or repairing the Project adjacent to and on the property of Railway as hereinabove provided.

(b) During the period of construction and/or improvement, or any period of maintenance, or repair, CITY and its contractor, if it employs one, shall procure and maintain, at their expense, in a form and with a company satisfactory to Railway, a policy of Commercial General Liability Insurance. Said policy shall have a minimum limit of not less than a combined single limit of $2,000,000 per occurrence for all loss, damage, cost and expense, including attorneys' fees, arising out of bodily injury liability and property damage liability during the policy period. In addition, said policy shall be endorsed to name Railway as an additional insured and shall include a severability of interests provision. A

certificate of insurance certifying the existence of such insurance shall be furnished to Railway. This certificate shall state that the insurance coverage will not be suspended, voided, canceled, or reduced in coverage or limits without (30) days advance written notice to Railway.

(c) In addition, CITY or its contractor, if it employs one, shall procure, at its expense, and furnish to Railway a Railroad Protective Liability Insurance policy naming the Railway as the named insured. Said policy shall have minimum limits of not less than a combined single limit of $2,000,000 each occurrence and $6,000,000 in the aggregate for bodily injury and property damage liability, and physical damage to property. Said policy shall be underwritten by a company satisfactory to Railway on Insurance Services Offices Form No. CG 00 35 10 01. The original Railroad Protective Liability Insurance Policy shall be furnished to Railway.

(d) Evidence of such insurance (Certificate of Insurance for the Commercial General Liability Insurance and the original Railroad Protective Liability Insurance Policy) must be furnished to and approved by the Director Risk Management, Norfolk Southern Corporation, Three Commercial Place, Norfolk, Virginia 23510-2191, prior to occupancy of Railway's property or commencement of construction, improvement, maintenance, or repair on Railway's premises.

The above insurance provisions are more specifically set forth in "Exhibit D" which is attached to this agreement.

SECTION 14. The work provided for in the agreement shall be commenced by the parties hereto within thirty (30) days from the latter of the following: (1) the date on which this agreement becomes effective, (2) the date on which Railway has been notified by CITY to proceed, or (3) the date on which all funds necessary therefore on the part of CITY have been properly certified and made available; and it shall be completed within a reasonable time thereafter. Buying and assembling of materials shall be constructed as compliance with the foregoing thirty (30) day provision.

Upon completion of the Project herein contemplated, CITY, shall own and maintain the trail covered structure, maintain the approach trail, own and maintain all other trail facilities constructed or changed under the terms of this agreement. Railway will permit access onto its property to perform any maintenance by CITY on its facilities. Access to Railway's property for future maintenance will be subject to Railway's terms and conditions for temporary right of entry. Railway shall, at its own cost and expense, maintain, repair, and renew all of its facilities constructed or changed under the terms of this agreement. Railway will not be vested with any rights of ownership in trail covered structure, and will not have a duty to maintain trail covered structure, and will not, if the trail is abandoned, have a duty to remove the trail covered structure form the Railway right of way.

SECTION 15. CITY shall require its contractor(s), upon the completion of the work of said contractor(s), to remove from within the limits of Railway's right-of-way all machinery, equipment, surplus materials, false work, rubbish or temporary buildings of said contractor(s), and to leave the right-of-way upon which the said contractor(s) carried on operations in a neat condition, satisfactory to the authorized representative of Railway.

SECTION 16. Notwithstanding any other provision of this Agreement, it is mutually understood, agreed and covenanted that CITY accepts this Agreement as a mere license and assumes all risk of damage to its property by reason of its occupation of the premises herein described, caused by any defects therein or business carried on therein, if such loss, damage or injury is caused by the negligence of CITY, its officers, agents or employees.

SECTION 17. It is agreed that Railway shall be exempt from any and all charges or assessments of any kind or character on account of the location, construction and/or improvement or maintenance of the Railway facilities within the limits of the right of way or property of Railway, or on account of any other thing done or omitted to be done by CITY in connection therewith.

SECTION 18. The word "Railway" as used herein shall include any other company whose property at the aforesaid location may be leased or operated by Railway. Said term also shall include Railway's officers, agents and employees, and any parent company, subsidiary or affiliate of Railway and their officers, agents and employees.

SECTION 19. The Project herein contemplated shall be subject to all appropriate Federal laws, rules, regulations, orders and approvals pertaining to all agreements, plans estimates, specifications, award of contract, acceptance of work and procedure in general. CITY will reimburse Railway as hereinbefore provided, for only such items of work and expense, and in such amounts and forms as are proper and eligible for payment.

SECTION 20. This Agreement may be terminated by either party hereto upon sixty (60) days' written notice to the other party. During said sixty-day period, CITY shall restore said premises to a condition satisfactory to Railway's chief engineering officer. CITY agrees to reimburse Railway for any and all costs of such work required to restore said premises to a condition satisfactory to Railway's chief engineering officer. No termination of this Agreement shall affect any liability incurred by either party hereto prior to the effective date of such termination.

This Agreement shall take effect as of the _____ day of _____, 20___.

IN WITNESS WHEREOF, the parties hereto have executed this Agreement in duplicate, each part being an original, as of the 4th day of June, 2013.

Witness:

THE ALABAMA GREAT SOUTHERN RAILWAY COMPANY

By

_____

As to Railway

_____

General Manager

Witness:

CITY OF HATTIESBURG

By

As to CITY

Title: Mayor

NS File: BR0011777

EXHIBIT A

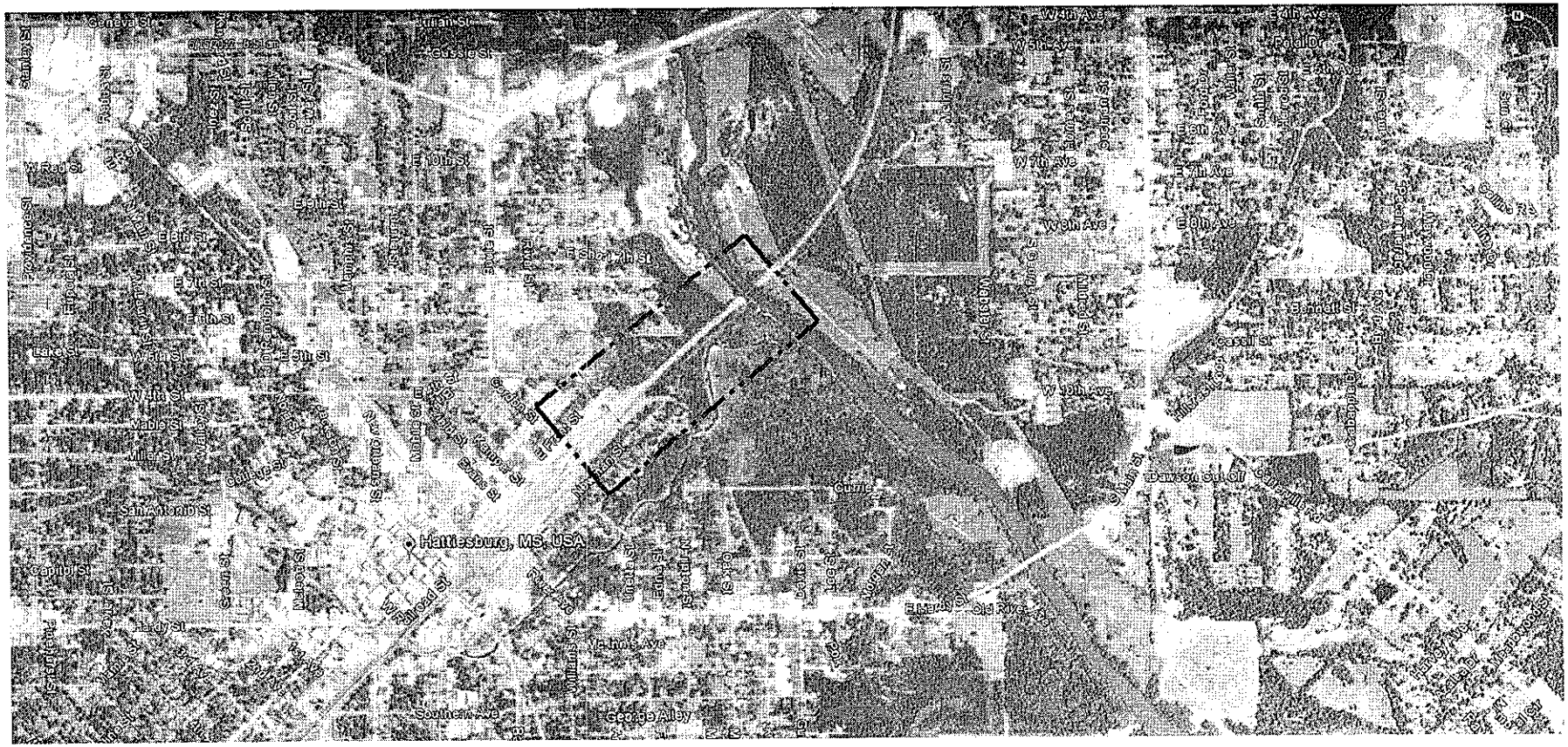

SHARED USE PATHWAY FROM NEWMAN-BUSCHMAN NEIGHBORHOOD TO CHAIN PARK

CITY OF HATTIESBURG
FORREST COUNTY, MS

NEEL-SCHAFFER
Solutions you can build upon

EXHIBIT 1
PROJECT LOCATION

4022-0.0

1

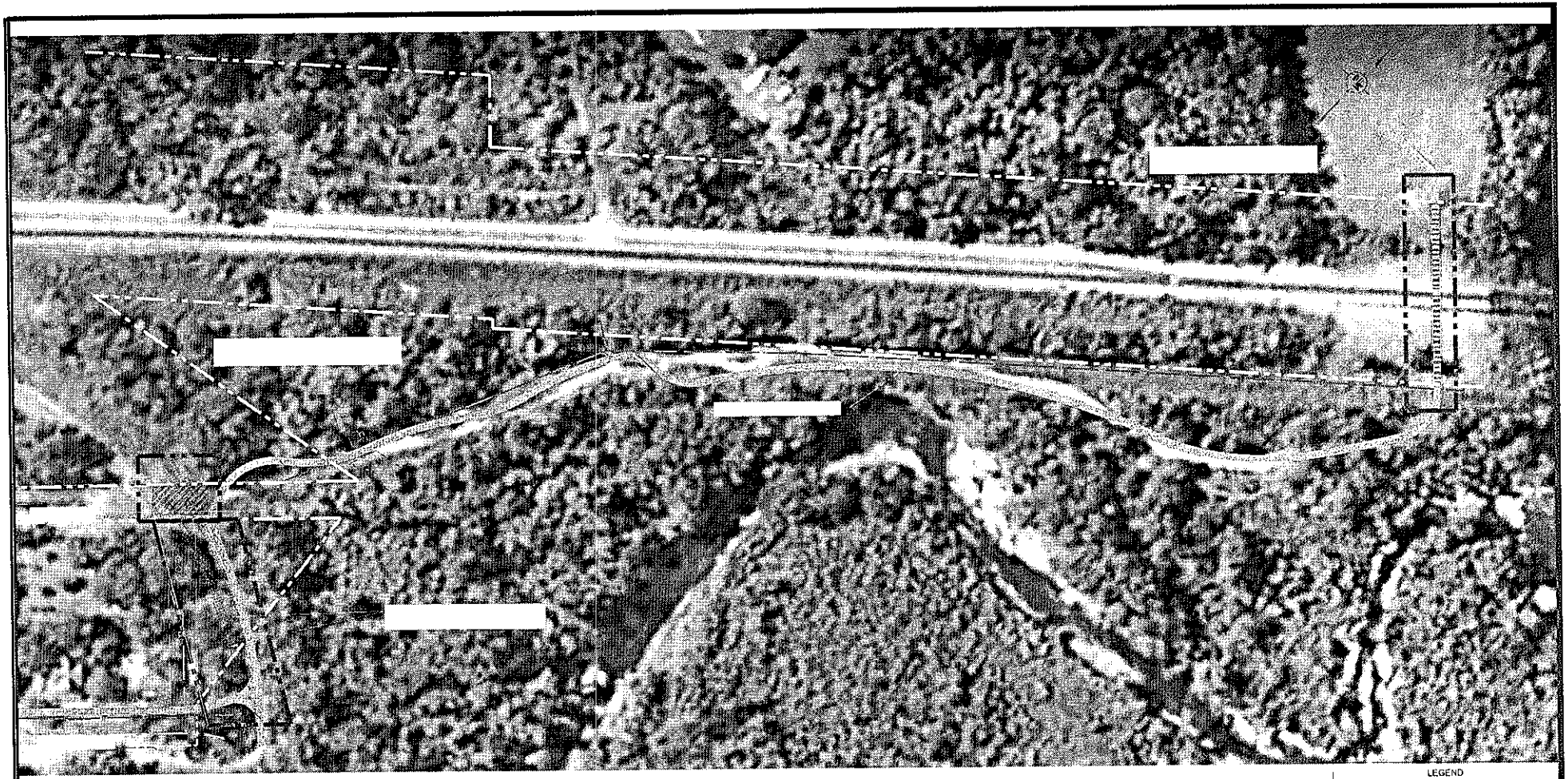

EXHIBIT A

LEGEND	
DESCRIPTION	SYMBOL
SANITARY SEWER	
POWER POLE	
POWER LINE	
GAS LINE	
RAILROAD RIGHT OF WAY	
PROPOSED TRAIL	
PROPOSED RAILROAD CROSSING	

GRAPHIC SCALE

50 0 25 50 100 200

(IN FEET)

1 inch = 50 feet

SHARED USE PATHWAY FROM NEWMAN-BUSCHMAN NEIGHBORHOOD TO CHAIN PARK

CITY OF HATTIESBURG
FORREST COUNTY, MS

NEEL-SCHAFFER
Solutions you can build upon

EXHIBIT 2
TRAIL MAP

4022-010 2

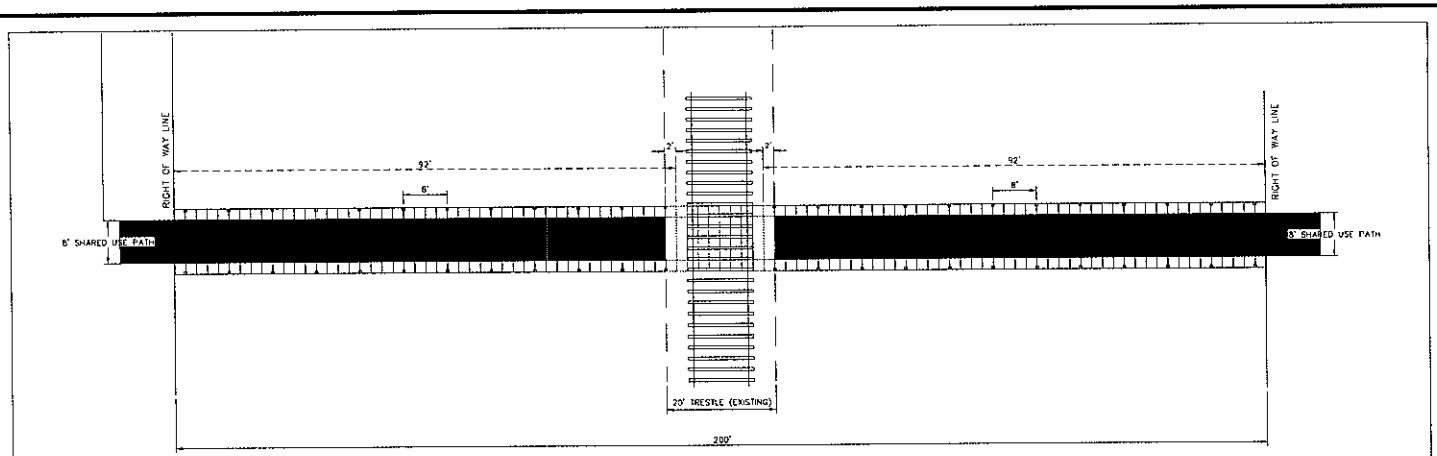

PLAN VIEW

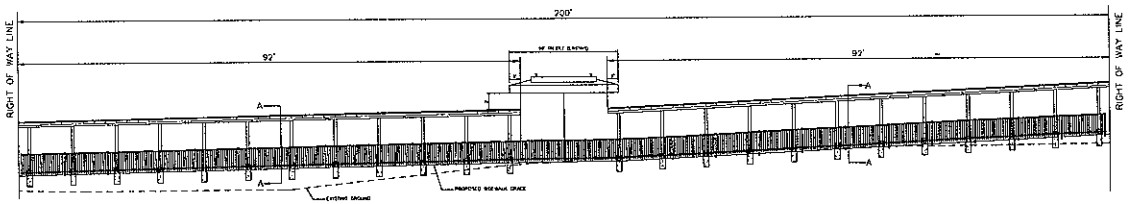

ELEVATION VIEW

RAILROAD CROSSING

(NOT TO SCALE)

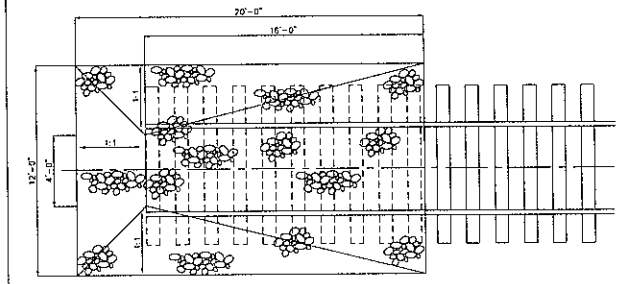

PLAN

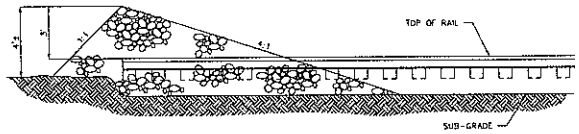

SECTION

EARTH MOUND CAR STOP DETAIL

(NOT TO SCALE)

EXHIBIT A

NOTICE TO DRAWING HOLDER

NEEL-SCHAFFER, INC., HEREINAFTER REFERRED TO AS THE ENGINEER HAS PREPARED AND FURNISHED THIS DRAWING TO THE OWNER FOR USE ON THIS PROJECT ONLY. THIS DRAWING SHOULD NOT BE USED ON EXTENSIONS OF THIS PROJECT OR ON ANY OTHER PROJECT. ANY REUSE OF THIS DRAWING, WITHOUT WRITTEN VERIFICATION OR ADAPTATION BY THE ENGINEER, SHALL BE AT THE REUSER'S SOLE RISK AND THE REUSER SHALL INDEMNIFY AND HOLD HARMLESS THE ENGINEER FROM ALL CLAIMS, DAMAGES, LOSSES AND EXPENSES, INCLUDING ATTORNEY'S FEES ARISING OUT OF OR RESULTING THEREFROM.

REVISIONS			
NO.	DATE	BY	DESCRIPTION

DRAWING INFORMATION	
N-S PROJECT NO:	8933.001
SCALE:	NONE
SURVEYED BY:	
DSGN: ZA	DATE: 06/28/2012
DRWN: JSB	DATE: 06/29/2012
CHKD:	DATE:
QA/QC:	DATE:

SHARED USE PATHWAY FROM NEWMAN-BUSCHMAN NEIGHBORHOOD TO CHAIN PARK

CITY OF HATTIESBURG
FORREST COUNTY, MS

NEEL-SCHAFFER
Solutions you can build upon

EXHIBIT 3
DETAILS

WORKING NUMBER:	DRAWING NUMBER:
4022-010	3

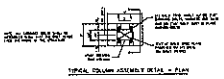

TYPICAL COLUMN ASSEMBLY DETAIL - PLAN

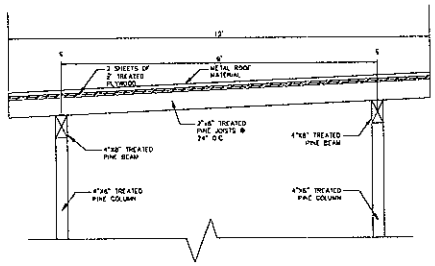

NOTES:

1. ALL EXPOSED STEEL SHALL RECEIVE TWO COATS OF RED OXIDE PAINT.
2. ALL WOOD SHALL RECEIVE TWO COATS OF THOMPSON WATER SEALER OR APPROVED EQUAL PRIOR TO THE COMPLETION OF CONSTRUCTION.
3. ALL WOOD MATERIALS SHALL BE TREATED SOUTHERN YELLOW PINE LUMBER OR APPROVED EQUAL.
4. ALL WOOD MEMBERS SHALL BE PRETREATED PRIOR TO CONSTRUCTION AS PER MANUFACTURER'S SPECIFICATIONS.
5. ALL CONCRETE PIERS SHALL HAVE A RUBBED FINISH.
6. ALL FASTENERS SHALL BE GALV. SELF-COUNTERSINKING SCREWS UNLESS OTHERWISE NOTED OR APPROVED EQUAL.

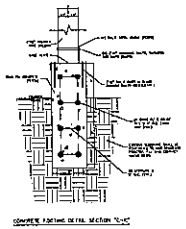

CONCRETE FOOTING DETAIL SECTION "C-C"

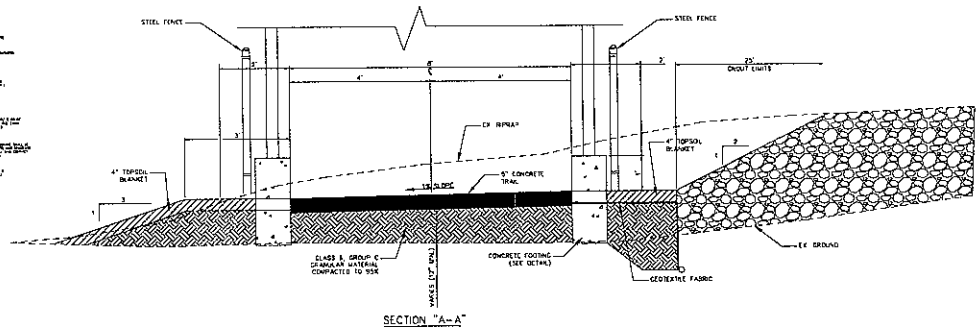

SECTION "A-A"

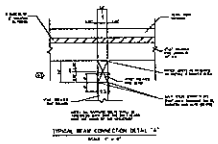

TYPICAL BEAM CONNECTION DETAIL "A"

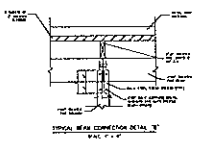

TYPICAL BEAM CONNECTION DETAIL "B"

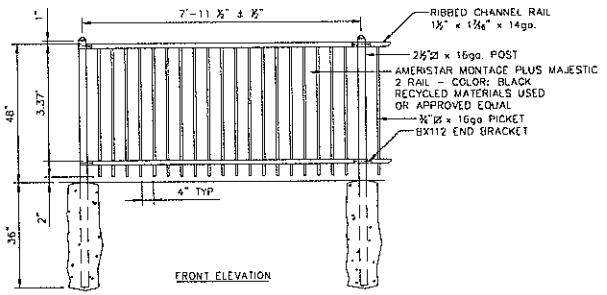

FRONT ELEVATION

ORNAMENTAL STEEL FENCING DETAIL

EXHIBIT A

NOTICE TO DRAWING HOLDER

NEEL-SCHAFFER, INC., HEREINAFTER REFERRED TO AS THE ENGINEER HAS PREPARED AND FURNISHED THIS DRAWING TO THE OWNER FOR USE ON THIS PROJECT ONLY. THIS DRAWING SHOULD NOT BE USED ON EXTENSIONS OF THIS PROJECT OR ON ANY OTHER PROJECT. ANY REUSE OF THIS DRAWING, WITHOUT WRITTEN VERIFICATION OR ADAPTATION BY THE ENGINEER, SHALL BE AT THE REUSER'S SOLE RISK AND THE REUSER SHALL INDEMNIFY AND HOLD HARMLESS THE ENGINEER FROM ALL CLAIMS, DAMAGES, LOSSES AND EXPENSES, INCLUDING ATTORNEY'S FEES ARISING OUT OF OR RESULTING THEREFROM.

REVISIONS			
NO.	DATE	BY	DESCRIPTION

DRAWING INFORMATION	
N-S PROJECT NO: 8933.001	
SCALE: NONE	
SURVEYED BY:	
DSGN: ZA	DATE: 06/29/2012
DRWN: JSB	DATE: 06/29/2012
CHKD:	DATE:
QA/QC:	DATE:

SHARED USE PATHWAY FROM NEWMAN-BUSCHMAN NEIGHBORHOOD TO CHAIN PARK

CITY OF HATTIESBURG
FORREST COUNTY, MS

NEEL-SCHAFFER
Solutions you can build upon

EXHIBIT 4
DETAILS

WORKING NUMBER:	DRAWING NUMBER:
4022-010	4

EXHIBIT B

FORCE ACCOUNT ESTIMATE

Work to be Performed By:	Alabama Great Southern Railroad Company
For the Account of:	City of Hattiesburg
Project Description:	Pedestrain Trail Construction Underneath Leaf River Bridge
Location:	Hattiesburg, Forrest County Mississippi
Project No.:	4022-010
Milepost:	NO-84.5
Date:	May 17, 2013
File:	BR0011777

SUMMARY

ITEM A - Preliminary Engineering		1,512
ITEM B - Construction Engineering		2,789
ITEM C - Accounting		1,269
ITEM D - Flagging Services		6,430
ITEM E - Communications Changes		0
ITEM F - Signal & Electrical Changes		0
ITEM G - Track Work		0
ITEM H - T-Cubed		0
GRAND TOTAL	**$**	**12,000**

ITEM A - Preliminary Engineering

(Review plans and special provisions, prepare estimates, etc.)

Labor:	10 Hours @ $60 / hour=	600
Labor Additives:		472
Travel Expenses:		440
Services by Contract Engineer:		0
NET TOTAL - ITEM A		$ 1,512

EXHIBIT B

ITEM B - Construction Engineering

(Coordinate Railway construction activities,
review contractor submittals, etc.)

Labor:	20 Hours @ $60 / hour=	1,200
Labor Additives:		943
Travel Expenses:		646
Services by Contract Engineer:		0
	NET TOTAL - ITEM B	$ 2,789

ITEM C - Administration

Agreement Construction, Review and/or Handling:		1,000
Accounting Hours (Labor):	5 Hours @ $30 / hour=	150
Accounting Additives:		119
	NET TOTAL - ITEM C	$ 1,269

ITEM D - Flagging Services

(During construction on, over,
under, or adjacent to the track.)

Labor:	Flagging Foreman	
	10 days @ 190.00 per day=	1,900
	(based on working 8 hours/day)	
Labor Additive:		3,530
Travel Expenses, Meals & Lodging:		
	10 days @ $100/day=	1,000
	NET TOTAL - ITEM D	$ 6,430

ITEM E - Communications Changes

Material:		0
Labor:		0
Purchase Services:		0
Subsistence:		0
Additive:		0
	NET TOTAL - ITEM E	$ -

EXHIBIT B

ITEM F - Signal & Electrical Changes

Material:	0
Labor:	0
Purchase Services:	0
Other:	0
NET TOTAL - ITEM F	$ -

ITEM G - Track Work

Material:	0
Labor:	0
Additive:	0
Purchase Services:	0
NET TOTAL - ITEM G	$ -

ITEM H - T-CUBED
Lump Sum $ -

NOTES

1. For all groups of CONTRACT employees, the composite labor surcharge rate used in this estimate (including insurance) is **185.81%**. Self Insurance - Public Liability Property Damage is estimated at 16.00%. Work will be billed at actual current audited rate in effect at the time the services are performed.

2. For all groups of NON-CONTRACT employees, the composite labor surcharge rate used in this estimate (including insurance is **78.59%**. Self Insurance - Public Liability Property Damage is estimated at 16.00%. Work will be billed at actual current audited rate in effect at the time the services are performed.

3. All applicable salvage items due the Department will be made available to it at the jobsite for its disposal.

4. The Force Account Estimate is valid for one (1) year after the date of the estimate (05/17/2013). If the work is not performed within this time frame the Railway may revise the estimate to (1) include work not previously indicated as necessary and (2) reflect changes in cost to perform the force account work.

EXHIBIT C

Norfolk Southern – Special Provisions for Protection of Railway Interest

1. AUTHORITY OF RAILROAD ENGINEER AND DEPARTMENT ENGINEER:

   The authorized representative of the Railroad Company, hereinafter referred to as Railroad Engineer, shall have final authority in all matters affecting the safe maintenance of Railroad traffic of his Company including the adequacy of the foundations and structures supporting the Railroad tracks. For Public Projects impacting Norfolk Southern, the Public Projects Engineer will serve as the Railroad Engineer.

   The authorized representative of the Department, hereinafter referred to as the Department Engineer, shall have authority over all other matters as prescribed herein and in the Project Specifications.

2. NOTICE OF STARTING WORK:

   A. Department's Prime contractor shall not commence any work on railroad rights-of-way until he has complied with the following conditions:

      1. Given the Railroad written notice in electronic format to the Railroad Engineer, with copy to the Department Engineer who has been designated to be in charge of the work, at least ten days in advance of the date he proposes to begin work on Railroad rights-of-way.

      2. Obtained written approval from the Railroad of Railroad Protective Liability Insurance coverage as required by paragraph 14 herein. It should be noted that Railroad Company does not accept notation of Railroad Protective insurance on a certificate of liability insurance form or Binders as Railroad Company must have the full original countersigned policy. Further, please note that mere receipt of the policy is not the only issue but review for compliance. Due to the number of projects system-wide, it typically takes a minimum of 30-45 days for Railroad Company to review.

      3. Obtained Railroad's Flagging Services as required by paragraph 7 herein.

      4. Obtained written authorization from the Railroad to begin work on Railroad rights-of-way, such authorization to include an outline of specific conditions with which he must comply.

      5. Furnished a schedule for all work within the Railroad rights-of-way as required by paragraph 7.B.1.

   B. The Railroad's written authorization to proceed with the work shall include the names, addresses, and telephone numbers of the Railroad's representatives who are to be notified as hereinafter required. Where more than one representative is designated, the area of responsibility of each representative shall be specified.

3. INTERFERENCE WITH RAILROAD OPERATIONS:

   A. The Contractor shall so arrange and conduct his work that there will be no interference with Railroad operations, including train, signal, telephone and telegraphic services, or damage to the

property of the Railroad Company or to poles, wires, and other facilities of tenants on the rights-of-way of the Railroad Company. Whenever work is liable to affect the operations or safety of trains, the method of doing such work shall first be submitted to the Railroad Engineer for approval, but such approval shall not relieve the Contractor from liability. Any work to be performed by the Contractor which requires flagging service or inspection service shall be deferred by the Contractor until the flagging service or inspection service required by the Railroad is available at the job site.

B. Whenever work within Railroad rights-of-way is of such a nature that impediment to Railroad operations such as use of runaround tracks or necessity for reduced speed is unavoidable, the Contractor shall schedule and conduct his operations so that such impediment is reduced to the absolute minimum.

C. Should conditions arising from, or in connection with the work, require that immediate and unusual provisions be made to protect operations and property of the Railroad, the Contractor shall make such provisions. If in the judgment of the Railroad Engineer, or in his absence, the Railroad's Division Engineer, such provisions is insufficient, either may require or provide such provisions as he deems necessary. In any event, such unusual provisions shall be at the Contractor's expense and without cost to the Railroad or the Department.

D. "One Call" Services do not locate buried railroad utilities. The contractor shall contact the railroad's representative 2 days in advance of work at those places where excavation, pile driving, or heavy loads may damage railroad underground facilities. Upon request from the contractor or agency, railroad forces will locate and paint mark or flag railroad underground facilities. The contractor shall avoid excavation or other disturbances of these facilities. If disturbance or excavation is required near a buried railroad facility, the contractor shall coordinate with the railroad to have the facility potholed manually with careful hand excavation. The facility shall be protected by the contractor during the course of the disturbance under the supervision and direction of the railroad representative.

4. TRACK CLEARANCES:

A. The minimum track clearances to be maintained by the Contractor during construction are shown on the Project Plans. If temporary clearances are not shown on the project plans, the following criteria shall govern the use of falsework and formwork above or adjacent to operated tracks.

1. A minimum vertical clearance of 22'-0" above top of highest rail shall be maintained at all times.

2. A minimum horizontal clearance of 13'-0" from centerline of tangent track or 14'-0" from centerline of curved track shall be maintained at all times. Additional horizontal clearance may be required in special cases to be safe for operating conditions. This additional clearance will be as determined by the Chief Engineer Bridges & Structures

3. All proposed temporary clearances which are less than those listed above must be submitted to the Chief Engineer Bridges & Structures for approval prior to construction and must also be authorized by the regulatory body of the State if less than the legally prescribed clearances.

4. The temporary clearance requirements noted above shall also apply to all other physical obstructions including, but not limited to: stockpiled materials, parked equipment, placement or driving of piles, and bracing or other construction supports.

B. Before undertaking any work within Railroad right-of-way, and before placing any obstruction over any track, the Contractor shall:

1. Notify the Railroad's representative at least 72 hours in advance of the work.

2. Receive assurance from the Railroad's representative that arrangements have been made for flagging service as may be necessary.

3. Receive permission from the Railroad's representative to proceed with the work.

4. Ascertain that the Department Engineer has received copies of notice to the Railroad and of the Railroad's response thereto.

5. CONSTRUCTION PROCEDURES:

A. General:

1. Construction work and operations by the Contractor on Railroad property shall be:

a. Subject to the inspection and approval of the Railroad or their designated Construction Engineering Representative.

b. In accord with the Railroad's written outline of specific conditions.

c. In accord with the Railroad's general rules, regulations and requirements including those relating to safety, fall protection and personal protective equipment.

d. In accord with these Special Provisions.

2. Submittal Requirements

a. The contractor shall submit all construction related correspondence and submittals electronically to the Railroad Engineer.

b. The contractor shall allow for 30 days for the Railroad's review and response.

c. All work in the vicinity of the Railroad's property that has the potential to affect the Railroad's train operations or disturb the Railroad's Property must be submitted and approved by the Railroad prior to work being performed.

d. All submittals and calculations must be signed and sealed by a registered engineer licensed in the state of the project work.

e. All submittals shall first be approved by the Department Engineer and the Railroad Engineer, but such approval shall not relieve the Contractor from liability.

f. For all construction projects, the following submittals, but not limited to those listed below, shall be provided for review and approval when applicable:

i. General Means and Methods
ii. Roadway Protection
iii. Construction Excavation & Shoring
iv. Pipe, Culvert, & Tunnel Installations
v. Demolition Procedure
vi. Erection & Hoisting Procedure
vii. Debris Shielding or Containment
viii. Blasting
ix. Formwork for the bridge deck, diaphragms, overhang brackets, and protective platforms
x. Bent Cap Falsework. A lift plan will be required if the contractor want to move the falsework over the tracks.

g. For Undergrade Bridges (Bridges carrying the Railroad) the following submittals in addition to those listed above shall be provided for review and approval:

i. Shop Drawings
ii. Bearing Shop Drawings and Material Certifications
iii. Concrete Mix Design
iv. Structural Steel, Rebar, and/or Strand Certifications
v. 28 day Cylinder Test for Concrete Strength
vi. Waterproofing Material Certification
vii. Test Reports for Fracture Critical Members
viii. Foundation Construction Reports

Fabrication may not begin until the Railroad has approved the required shop drawings.

h. The Contractor shall include in all submissions a detailed narrative indicating the progression of work with the anticipated timeframe to complete each task. Work will not be permitted to commence until the Contractor has provided the Railroad with a satisfactory plan that the project will be undertaken without scheduling, performance or safety related issues. Submission shall also provide a listing of the anticipated equipment to be used, the location of all equipment to be used and insure a contingency plan of action is in place should a primary piece of equipment malfunction.

B. Roadway Protection

1. The Contractor shall submit the proposed roadway protection system detailing the specific filter fabric and anchorage system to be used during all construction activities.

2. The roadway protection is to extend 25' beyond the proposed limit of work, be installed at the start of the project and be continuously maintained to prevent all contaminants from entering the ballast section of all tracks for the entire duration of the project.

C. Excavation:

1. The subgrade of an operated track shall be maintained with edge of berm at least 10'-0" from centerline of track and not more than 24- inches below top of rail. Contractor will not be required to make existing section meet this specification if substandard, in which case existing section will be maintained.

2. Additionally, the Railroad will require the installation of an OSHA approved handrail and orange construction safety fencing for all excavations of the Railroad right-of-way.

D. Excavation for Structures and Shoring Protection:

1. The Contractor will be required to take special precaution and care in connection with excavating and shoring pits, and in driving piles or sheeting for footings adjacent to tracks to provide adequate lateral support for the tracks and the loads which they carry, without disturbance of track alignment and surface, and to avoid obstructing track clearances with working equipment, tools or other material.

2. All plans and calculations for shoring shall be prepared and signed by a Registered Professional Engineer, licensed in the state of the proposed project, in accordance with Norfolk Southern's Guidelines for Design of Grade Separation Structures, Section 1 – Overhead Grade Separation Design Criteria, subsection 4.E Construction Excavation. The Registered Professional Engineer will be responsible for the accuracy for all controlling dimensions as well as the selection of soil design values which will accurately reflect the actual field conditions.

3. The contractor shall provide a detailed installation and removal plan of the shoring components. Any component that will be installed via the use of a crane or any other lifting device shall be subject to the guidelines outlined in section 5.G.

4. The contractor shall be required to survey the track(s) and railroad embankment and provide a cross section of the proposed excavation in relation to the tracks.

5. Calculations for the proposed shoring should include deflection calculations. The maximum deflection for excavations within 18'-0" of the centerline of the nearest track shall be 3/8". For all other cases, the max deflection shall not exceed ½".

6. Additionally, the Railroad will require the installation of an OSHA approved handrail and orange construction safety fencing for all excavations of the Railroad right-of-way.

E. Pipe, Culvert, & Tunnel Installations

a. Pipe, Culvert, & Tunnel Installations shall be in accordance with the "Specifications for Pipeline Occupancy of Norfolk Southern Corporation Property (NSCE-8)."

F. Demolition Procedure

1. General

a. Demolition plans are required for all spans over the track(s), for all spans adjacent to the track(s), if located on (or partially on) Railroad right-of-way; and in all situations where cranes will be situated on, over, or adjacent to Railroad

right-of-way and within a distance of boom length plus 15'-0" from the centerline of track.

b. Railroad tracks and other railroad property must be protected from damage during the procedure.

c. A pre-demolition meeting shall be conducted with the Department, the Railroad Engineer or their representative, and the key contractor personnel prior to the start of the demolition procedure.

d. The Railroad Engineer or his designated representative must be present at the site during the entire demolition procedure period.

e. Existing, obsolete, bridge piers shall be removed to a sufficient depth below grade to enable restoration of the existing/proposed track ditch, but in co case less than 2'-0" below final grade.

2. Submittal Requirements

a. In addition to the submittal requirements outlined in Section 5.A.2, the contractor shall submit the following for approval by the Railroad Engineer:

i. A plan showing the location of cranes, horizontally and vertically, operating radii, with delivery or disposal locations shown. The location of all tracks and other railroad facilities as well as all obstructions such as wire lines, poles, adjacent structures, etc. must also be shown.

ii. Rating sheets showing cranes or lifting devices to be adequate for 150% of the actual weight of the pick, including all rigging components. A complete set of crane charts, including crane, counterweight, and boom nomenclature is to be submitted. Safety factors that may have been "built-in" to the crane charts are not to be considered when determining the 150% factor of safety.

iii. Plans and computations showing the weight of the pick must be submitted. Calculations shall be made from plans of the existing structure showing complete and sufficient details with supporting data for the demolition the structure. If plans do not exist, lifting weights must be calculated from field measurements. The field measurements are to be made under the supervision of the Registered Professional Engineer submitting the procedure and calculations.

iv. The contractor shall provide a sketch of all rigging components from the crane's hook block to the beam. Catalog cuts or information sheets of all rigging components with their lifting capacities shall be provided. All rigging must be adequate for 150% of the actual weight of the pick. Safety factors that may have been "built-in" to the rating charts are not to be considered when determining the 150% factor of safety. All rigging components shall be clearly identified and tagged with their rated lifting capacities. The position of the rigging in the

field shall not differ from what is shown on the final plan without prior review from the Department and the Railroad.

v. A complete demolition procedure, including the order of lifts, time required for each lift, and any repositioning or re-hitching of the crane or cranes.

vi. Design and supporting calculations for the temporary support of components, including but not limited to the stability of the superstructure during the temporary condition, temporary girder tie-downs and falsework.

3. Overhead Demolition Debris Shield

a. The demolition debris shield shall be installed prior to the demolition of the bridge deck or other relevant portions of the superstructure over the track area to catch all falling debris.

b. The demolition debris shield shall provide a minimum vertical clearance as specified in Section 4.A.1 or maintain the existing vertical clearance if the existing clearance is less than that specified in Section 4.A.1.

c. The Contractor shall include the demolition debris shield installation/removal means and methods as part of the proposed Demolition procedure submission.

d. The contractor shall submit the demolition debris shield design and supporting calculations for approval by the Railroad Engineer

e. The demolition debris shield shall have a minimum design load of 50 pounds per square foot plus the weight of the equipment, debris, personnel, and other loads to be carried.

f. The Contractor shall include the proposed bridge deck removal procedure in its demolition means and methods and shall verify that the size and quantity of the demolition debris generated by the procedure does not exceed the shield design loads.

g. The contractor shall clean the demolition debris shield daily or more frequently as dictated either by the approved design parameters or as directed by the Railroad Engineer.

4. Vertical Demolition Debris Shield

a. A vertical demolition debris shield may be required for substructure removals in close proximity to the Railroad's track and other facilities, as determined by the Railroad Engineer.

G. Erection & Hoisting Procedures

1. General

a. Erection plans are required for all spans over the track(s), for all spans adjacent to the track(s), if located on (or partially on) Railroad right-of-way; and in all situations where cranes will be situated on, over, or adjacent to Railroad right-of-way and within a distance of boom length plus 15'-0" from the centerline of track.

b. Railroad tracks and other railroad property must be protected from damage during the erection procedure.

c. A pre-erection meeting shall be conducted with the Department, the Railroad Engineer or their representative, and the key contractor personnel prior to the start of the erection procedure.

d. The Railroad Engineer or his designated representative must be present at the site during the entire erection procedure period.

e. For field splices located over Railroad property, a minimum of 50% of the holes for each connection shall be filled with bolts or pins prior to releasing the crane. A minimum of 50% of the holes filled shall be filled with bolts. All bolts must be appropriately tightened.

2. Submittal Requirements

a. In addition the submittal requirements outlined in Section 5.A.2, the contract shall submit the following for approval by the Railroad Engineer:

i. As-built beam seat elevations - All as-built bridge seats and top of rail elevations shall be furnished to the Railroad Engineer for review and verification at least 30 days in advance of the erection, to ensure that minimum vertical clearances as approved in the plans will be achieved.

ii. A plan showing the location of cranes, horizontally and vertically, operating radii, with delivery or staging locations shown. The location of all tracks and other railroad facilities as well as all obstructions such as wire lines, poles, adjacent structures, etc. must also be shown.

iii. Rating sheets showing cranes or lifting devices to be adequate for 150% of the actual weight of the pick, including all rigging components. A complete set of crane charts, including crane, counterweight, and boom nomenclature is to be submitted. Safety factors that may have been "built-in" to the crane charts are not to be considered when determining the 150% factor of safety.

iv. Plans and computations showing the weight of the pick must be submitted. Calculations shall be made from plans of the proposed structure showing complete and sufficient details with supporting data for the erection of the structure. If plans do not exist, lifting weights must be calculated from field measurements. The field measurements are to be made under the supervision of the Registered Professional Engineer submitting the procedure and calculations.

v. The contractor shall provide a sketch of all rigging components from the crane's hook block to the beam. Catalog cuts or information sheets of all rigging components with their lifting capcities shall be provided. All rigging must be adequate for 150% of the actual weight of the pick. Safety factors that may have been "built-in" to the rating charts are not to be considered when determining the 150% factor of safety. All rigging components shall be clearly identified and tagged with their rated lifting capacities. The position of the rigging in the field shall not differ from what is shown on the final plan without prior review from the Department and the Railroad.

vi. A complete erection procedure, including the order of lifts, time required for each lift, and any repositioning or re-hitching of the crane or cranes.

vii. Design and supporting calculations for the temporary support of components, including but not limited to temporary girder tie-downs and falsework.

H. Blasting:

1. The Contractor shall obtain advance approval of the Railroad Engineer and the Department Engineer for use of explosives on or adjacent to Railroad property. The request for permission to use explosives shall include a detailed blasting plan. If permission for use of explosives is granted, the Contractor will be required to comply with the following:

a. Blasting shall be done with light charges under the direct supervision of a responsible officer or employee of the Contractor and a licensed blaster.

b. Electric detonating fuses shall not be used because of the possibility of premature explosions resulting from operation of two-way radios.

c. No blasting shall be done without the presence of the Railroad Engineer or his authorized representative. At least 72 hours advance notice to the person designated in the Railroad's notice of authorization to proceed (see paragraph 5.E.2.B) will be required to arrange for the presence of an authorized Railroad representative and such flagging as the Railroad may require.

d. Have at the job site adequate equipment, labor and materials and allow sufficient time to clean up debris resulting from the blasting without delay to trains, as well as correcting at his expense any track misalignment or other damage to Railroad property resulting from the blasting as directed by the Railway's authorized representative. If his actions result in delay of trains, the Contractor shall bear the entire cost thereof.

e. The blasting contractor shall have a copy of the approved blasting plan on hand while on the site.

f. Explosive materials or loaded holes shall not be left unattended at the blast site.

g. A seismograph shall be placed on the track shoulder adjacent to each blast which will govern the peak particle velocity of two inches per second. Measurement shall also be taken on the ground adjacent to structures as designated by a qualified and independent blasting consultant. The Railroad reserves the option to direct the placement of additional seismographs at structures or other locations of concern, without regard to scaled distance.

h. After each blast, the blasting contractor shall provide a copy of their drill log and blast report, which includes number of holes, depth of holes, number of decks, type and pounds of explosives used per deck.

i. The Railroad may require top of rail elevations and track centers taken before, during and after the blasting and excavation operation to check for any track misalignment resulting from the Contractor's activities.

2. The Railroad representative will:

   a. Determine approximate location of trains and advise the Contractor the appropriate amount of time available for the blasting operation and clean up.

   b. Have the authority to order discontinuance of blasting if, in his opinion, blasting is too hazardous or is not in accord with these special provisions.

3. The Contractor must hire, at no expense to the Railroad, a qualified and independent blasting consultant to oversee the use of explosives. The blasting consultant will:

   a. Review the Contractor's proposed drilling and loading patterns, and with the blasting consultant's personnel and instruments, monitor the blasting operations.

   b. Confirm that the minimum amounts of explosives are used to remove the rock.

   c. Be empowered to intercede if he concludes that the Contractor's blasting operations are endangering the Railway.

   d. Submit a letter acknowledging that he has been engaged to oversee the entire blasting operation and that he approves of the blasting plan.

   e. Furnish copies of all vibration readings to the Railroad representative immediately after each blast. The representative will sign and date the seismograph tapes after each shot to verify the readings are for that specific shot.

   f. Advise the Railroad representative as to the safety of the operation and notify him of any modifications to the blasting operation as the work progresses.

4. The request for permission to use explosives on the Railroad's Right-of-Way shall include a blasting proposal providing the following details:

a. A drawing which shows the proposed blasting area, location of nearest hole and distance to Railway structures, all with reference to the centerline of track.

b. Hole diameter.

c. Hole spacing and pattern.

d. Maximum depth of hole.

e. Maximum number of decks per hole.

f. Maximum pounds of explosives per hole.

g. Maximum pounds of explosives per delay.

h. Maximum number of holes per detonation.

i. Type of detonator and explosives to be used. (Electronic detonating devices will not be permitted). Diameter of explosives if different from hole diameter.

j. Approximate dates and time of day when the explosives are to be detonated.

k. Type of flyrock protection.

l. Type and patterns of audible warning and all clear signals to be used before and after each blast.

m. A copy of the blasting license and qualifications of the person directly in charge of the blasting operation, including their name, address and telephone number.

n. A copy of the Authority's permit granting permission to blast on the site.

o. A letter from the blasting consultant acknowledging that he has been engaged to oversee the entire blasting operation and that he approves of the blasting plan.

p. In addition to the insurance requirements outlined in Paragraph 14, A certificate of insurance from the Contractor's insurer stating the amount of coverage for XCU (Explosive Collapse and Underground Hazard) insurance and that XCU Insurance is in force for this project.

q. A copy of the borings and Geotechnical information or report.

I. Track Monitoring

1. At the direction of the Railroad Engineer, any activity that has the potential to disturb the Railroad track structure may require the contractor to submit a detailed track monitoring program for approval by the Railroad Engineer.

2. The program shall specify the survey locations, the distance between the location points, and frequency of monitoring before, during, and after construction. Railroad reserves the right to modify the survey locations and monitoring frequency as necessary during the project.

3. The survey data shall be collected in accordance with the approved frequency and immediately furnished to the Railroad Engineer for analysis.

4. If any movement has occurred as determined by the Railroad Engineer, the Railroad will be immediately notified. Railroad, at its sole discretion, shall have the right to immediately require all contractor operations to be ceased and determine what corrective action is required. Any corrective action required by the Railroad or performed by the Railroad including the monitoring of corrective action of the contractor will be at project expense.

J. Maintenance of Railroad Facilities:

1. The Contractor will be required to maintain all ditches and drainage structures free of silt or other obstructions which may result from his operations and provide and maintain any erosion control measures as required. The Contractor will promptly repair eroded areas within Railroad rights-of-way and repair any other damage to the property of the Railroad or its tenants.

2. If, in the course of construction, it may be necessary to block a ditch, pipe or other drainage facility, temporary pipes, ditches or other drainage facilities shall be installed to maintain adequate drainage, as approved by NS. Upon completion of the work, the temporary facilities shall be removed and the permanent facilities restored.

3. All such maintenance and repair of damages due to the Contractor's operations shall be done at the Contractor's expense.

K. Storage of Materials and Equipment:

1. Materials and equipment shall not be stored where they will interfere with Railroad operations, nor on the rights-of-way of the Railroad Company without first having obtained permission from the Railroad Engineer, and such permission will be with the understanding that the Railroad Company will not be liable for damage to such material and equipment from any cause and that the Railroad Engineer may move or require the Contractor to move, at the Contractor's expense, such material and equipment.

2. All grading or construction machinery that is left parked near the track unattended by a watchman shall be effectively immobilized so that it cannot be moved by unauthorized persons. The Contractor shall protect, defend, indemnify and save Railroad, and any associated, controlled or affiliated corporation, harmless from and against all losses, costs, expenses, claim or liability for loss or damage to property or the loss of life or personal injury, arising out of or incident to the Contractor's failure to immobilize grading or construction machinery.

L. Cleanup:

1. Upon completion of the work, the Contractor shall remove from within the limits of the Railroad rights-of-way, all machinery, equipment, surplus materials, falsework, rubbish or temporary buildings of the Contractor, and leave said rights-of-way in a neat condition satisfactory to the Chief Engineer of the Railroad or his authorized representative.

6. DAMAGES:

   A. The Contractor shall assume all liability for any and all damages to his work, employees, servants, equipment and materials caused by Railroad traffic.

   B. Any cost incurred by the Railroad for repairing damages to its property or to property of its tenants, caused by or resulting from the operations of the Contractor, shall be paid directly to the Railroad by the Contractor.

7. FLAGGING SERVICES:

   A. Requirements:

      1. Flagging services will not be provided until the contractor's insurance has been reviewed & approved by the Railroad.

      2. Under the terms of the agreement between the Department and the Railroad, the Railroad has sole authority to determine the need for flagging required to protect its operations. In general, the requirements of such services will be whenever the Contractor's personnel or equipment are or are likely to be, working on the Railroad's right-of-way, or across, over, adjacent to, or under a track, or when such work has disturbed or is likely to disturb a railroad structure or the railroad roadbed or surface and alignment of any track to such extent that the movement of trains must be controlled by flagging.

      3. Normally, the Railroad will assign one flagman to a project; but in some cases, more than one may be necessary, such as yard limits where three (3) flagmen may be required. However, if the Contractor works within distances that violate instructions given by the Railroad's authorized representative or performs work that has not been scheduled with the Railroad's authorized representative, a flagman or flagmen may be required full time until the project has been completed.

   B. Scheduling and Notification:

      1. The Contractor's work requiring railroad flagging should be scheduled to limit the presence of a flagman at the site to a maximum of 50 hours per week. The Contractor shall receive Railroad approval of work schedules requiring a flagman's presence in excess of 40 hours per week.

      2. Not later than the time that approval is initially requested to begin work on Railroad right-of-way, Contractor shall furnish to the Railroad and the Department a schedule for all work required to complete the portion of the project within Railroad right-of-way and arrange for a job site meeting between the Contractor, the Department, and the Railroad's authorized representative. Flagman or Flagmen may not be provided until the job site meeting has been conducted and the Contractor's work scheduled.

      3. The Contractor will be required to give the Railroad representative at least 10 working days of advance written notice of intent to begin work within Railroad right-of-way in accordance with this special provision. Once begun, when such work is then suspended at any time, or for any reason, the Contractor will be required to

give the Railroad representative at least 3 working days of advance notice before resuming work on Railroad right-of-way. Such notices shall include sufficient details of the proposed work to enable the Railroad representative to determine if flagging will be required. If such notice is in writing, the Contractor shall furnish the Engineer a copy; if notice is given verbally, it shall be confirmed in writing with copy to the Engineer. If flagging is required, no work shall be undertaken until the flagman, or flagmen are present at the job site. It may take up to 30 days to obtain flagging initially from the Railroad. When flagging begins, the flagman is usually assigned by the Railroad to work at the project site on a continual basis until no longer needed and cannot be called for on a spot basis. If flagging becomes unnecessary and is suspended, it may take up to 30 days to again obtain from the Railroad. Due to Railroad labor agreements, it is necessary to give 5 working days notice before flagging service may be discontinued and responsibility for payment stopped.

4. If, after the flagman is assigned to the project site, an emergency arises that requires the flagman's presence elsewhere, then the Contractor shall delay work on Railroad right-of-way until such time as the flagman is again available. Any additional costs resulting from such delay shall be borne by the Contractor and not the Department or Railroad.

C. Payment:

1. The Department will be responsible for paying the Railroad directly for any and all costs of flagging which may be required to accomplish the construction.

2. The estimated cost of flagging is current rate per day based on a 10-hour work day. This cost includes the base pay for the flagman, overhead, and includes a per diem charge for travel expenses, meals and lodging. The charge to the Department by the Railroad will be the actual cost based on the rate of pay for the Railroad's employees who are available for flagging service at the time the service is required.

3. Work by a flagman in excess of 8 hours per day or 40 hours per week, but not more than 12 hours a day will result in overtime pay at 1 and 1/2 times the appropriate rate. Work by a flagman in excess of 12 hours per day will result in overtime at 2 times the appropriate rate. If work is performed on a holiday, the flagging rate is 2 and 1/2 times the normal rate.

4. Railroad work involved in preparing and handling bills will also be charged to the Department. Charges to the Department by the Railroad shall be in accordance with applicable provisions of Subchapter B, Part 140, Subpart I and Subchapter G, Part 646, Subpart B of the Federal-Aid Policy Guide issued by the Federal Highway Administration on December 9, 1991, including all current amendments. Flagging costs are subject to change. The above estimates of flagging costs are provided for information only and are not binding in any way.

D. Verification:

1. Railroad's flagman will electronically enter flagging time via Railroad's electronic billing system. Any complaints concerning flagging must be resolved in a timely manner. If the need for flagging is questioned, please contact Railroad's System Engineer - Public Improvements. All verbal complaints will be confirmed in writing by the Contractor within 5 working days with a copy to the Department's

Engineer. Address all written correspondence electronically to Railroad's System Engineer - Public Improvements:

2. The Railroad flagman assigned to the project will be responsible for notifying the Department Engineer upon arrival at the job site on the first day (or as soon thereafter as possible) that flagging services begin and on the last day that he performs such services for each separate period that services are provided. The Department Engineer will document such notification in the project records. When requested, the Department Engineer will also sign the flagman's diary showing daily time spent and activity at the project site.

8. HAUL ACROSS RAILROAD:

   A. Where the plans show or imply that materials of any nature must be hauled across a Railroad, unless the plans clearly show that the Department has included arrangements for such haul in its agreement with the Railroad, the Contractor will be required to make all necessary arrangements with the Railroad regarding means of transporting such materials across the Railroad. The Contractor or Agency will be required to bear all costs incidental to such crossings whether services are performed by his own forces or by Railroad personnel.

   B. No crossing may be established for use of the Contractor for transporting materials or equipment across the tracks of the Railroad Company unless specific authority for its installation, maintenance, necessary watching and flagging thereof and removal, until a temporary private crossing agreement has been executed between the Contractor and Railroad. The approval process for an agreement normally takes 90-days.

9. WORK FOR THE BENEFIT OF THE CONTRACTOR:

   A. All temporary or permanent changes in wire lines or other facilities which are considered necessary to the project are shown on the plans; included in the force account agreement between the Department and the Railroad or will be covered by appropriate revisions to same which will be initiated and approved by the Department and/or the Railroad.

   B. Should the Contractor desire any changes in addition to the above, then he shall make separate arrangements with the Railroad for same to be accomplished at the Contractor's expense.

10. COOPERATION AND DELAYS:

   A. It shall be the Contractor's responsibility to arrange a schedule with the Railroad for accomplishing stage construction involving work by the Railroad or tenants of the Railroad. In arranging his schedule he shall ascertain, from the Railroad, the lead time required for assembling crews and materials and shall make due allowance therefore.

   B. No charge or claim of the Contractor against either the Department or the Railroad Company will be allowed for hindrance or delay on account of railway traffic; any work done by the Railway Company or other delay incident to or necessary for safe maintenance of railway traffic or for any delays due to compliance with these special provisions.

11. TRAINMAN'S WALKWAYS:

   A. Along the outer side of each exterior track of multiple operated track, and on each side of single operated track, an unobstructed continuous space suitable for trainman's use in walking

along trains, extending to a line not less than 10 feet from centerline of track, shall be maintained. Any temporary impediments to walkways and track drainage encroachments or obstructions allowed during work hours while Railway's protective service is provided shall be removed before the close of each work day. If there is any excavation near the walkway, a handrail, with 10'-0" minimum clearance from centerline of track, shall be placed and must conform to AREMA and/or FRA standards.

12. GUIDELINES FOR PERSONNEL ON RAILROAD RIGHT-OF-WAY:

A. The Contractor and/or the Agency's personnel authorized to perform work on Norfolk Southern's property as specified in Section 2 above are not required to complete Norfolk Southern Roadway Worker Protection Training; However the Contractor and the Agency's personnel must be familiar with Norfolk Southern's standard operating rules and guidelines, should conduct themselves accordingly, and may be removed from the property for failure to follow these guidelines.

B. All persons shall wear hard hats. Appropriate eye and hearing protection must be used. Working in shorts is prohibited. Shirts must cover shoulders, back and abdomen. Working in tennis or jogging shoes, sandals, boots with high heels, cowboy and other slip-on type boots is prohibited. Hard-sole, lace-up footwear, zippered boots or boots cinched up with straps which fit snugly about the ankle are adequate. Wearing of safety boots is strongly recommended. In the vicinity of at-grade crossings, it is strongly recommended that reflective vests be worn.

C. No one is allowed within 25' of the centerline of track without specific authorization from the flagman.

D. All persons working near track while train is passing are to lookout for dragging bands, chains and protruding or shifted cargo.

E. No one is allowed to cross tracks without specific authorization from the flagman.

F. All welders and cutting torches working within 25' of track must stop when train is passing.

G. No steel tape or chain will be allowed to cross or touch rails without permission from the Railroad.

13. GUIDELINES FOR EQUIPMENT ON RAILROAD RIGHT-OF-WAY:

A. No crane or boom equipment will be allowed to set up to work or park within boom distance plus 15' of centerline of track without specific permission from railroad official and flagman.

B. No crane or boom equipment will be allowed to foul track or lift a load over the track without flag protection and track time.

C. All employees will stay with their machines when crane or boom equipment is pointed toward track.

D. All cranes and boom equipment under load will stop work while train is passing (including pile driving).

E. Swinging loads must be secured to prevent movement while train is passing.

F. No loads will be suspended above a moving train.

G. No equipment will be allowed within 25' of centerline of track without specific authorization of the flagman.

H. Trucks, tractors or any equipment will not touch ballast line without specific permission from railroad official and flagman. Orange construction fencing may be required as directed.

I. No equipment or load movement within 25' or above a standing train or railroad equipment without specific authorization of the flagman.

J. All operating equipment within 25' of track must halt operations when a train is passing. All other operating equipment may be halted by the flagman if the flagman views the operation to be dangerous to the passing train.

K. All equipment, loads and cables are prohibited from touching rails.

L. While clearing and grubbing, no vegetation will be removed from railroad embankment with heavy equipment without specific permission from the Railroad Engineer and flagman.

M. No equipment or materials will be parked or stored on Railroad's property unless specific authorization is granted from the Railroad Engineer.

N. All unattended equipment that is left parked on Railroad property shall be effectively immobilized so that it cannot be moved by unauthorized persons.

O. All cranes and boom equipment will be turned away from track after each work day or whenever unattended by an operator.

P. Prior to performing any crane operations, the contractor shall establish a single point of contact for the Railroad flagman to remain in communication with at all times. Person must also be in direct contact with the individual(s) directing the crane operation(s).

14. INSURANCE:

A. In addition to any other forms of insurance or bonds required under the terms of the contract and specifications, the Prime Contractor will be required to carry insurance of the following kinds and amounts:

1. Commercial General Liability Insurance having a combined single limit of not less than $2,000,000 per occurrence for all loss, damage, cost and expense, including attorneys' fees, arising out of bodily injury liability and property damage liability during the policy period. Said policy shall include explosion, collapse, and underground hazard (XCU) coverage, shall be endorsed to name Railroad specified in item A.2.c. below both as the certificate holder and as an additional insured, and shall include a severability of interests provision.

2. Railroad Protective Liability Insurance having a combined single limit of not less than $2,000,000 each occurrence and $6,000,000 in the aggregate applying separately to each annual period. If the project involves track over which passenger trains operate, the insurance limits required are not less than a combined single limit of

$5,000,000 each occurrence and $10,000,000 in the aggregate applying separately to each annual period. Said policy shall provide coverage for all loss, damage or expense arising from bodily injury and property damage liability, and physical damage to property attributed to acts or omissions at the job site.

3. The standards for the Railroad Protective Liability Insurance are as follows:

   a. The insurer must be rated A- or better by A.M. Best Company, Inc.

   b. The policy must be written using one of the following combinations of Insurance Services Office ("ISO") Railroad Protective Liability Insurance Form Numbers:

      i. CG 00 35 01 96 and CG 28 31 10 93; or
      ii. CG 00 35 07 98 and CG 28 31 07 98; or
      iii. CG 00 35 10 01; or
      iv. CG 00 35 12 04.

   c. The named insured shall read:

      Norfolk Southern Railway Company
      Three Commercial Place
      Norfolk, Virginia 23510-2191
      Attn: Risk Management

   d. The description of operations must appear on the Declarations, must match the project description in this agreement, and must include the appropriate Department project and contract identification numbers.

   e. The job location must appear on the Declarations and must include the city, state, and appropriate highway name/number. NOTE: Do not include any references to milepost on the insurance policy.

   f. The name and address of the prime contractor must appear on the Declarations.

   g. The name and address of the Department must be identified on the Declarations as the "Involved Governmental Authority or Other Contracting Party."

   h. Other endorsements/forms that will be accepted are:

      i. Broad Form Nuclear Exclusion – Form IL 00 21
      ii. 30-day Advance Notice of Non-renewal or cancellation
      iii. Required State Cancellation Endorsement
      iv. Quick Reference or Index Form CL/IL 240

   i. Endorsements/forms that are NOT acceptable are:

      i. Any Pollution Exclusion Endorsement except CG 28 31
      ii. Any Punitive or Exemplary Damages Exclusion
      iii. Known injury or Damage Exclusion form CG 00 59

iv. Any Common Policy Conditions form
v. Any other endorsement/form not specifically authorized in item no. 2.h above.

B. If any part of the work is sublet, similar insurance, and evidence thereof as specified in A.1 above, shall be provided by or on behalf of the subcontractor to cover its operations on Railroad's right of way.

C. Prior to entry on Railroad right-of-way, the original Railroad Protective Liability Insurance Policy shall be submitted by the Prime Contractor to the Department at the address below for its review and transmittal to the Railroad. In addition, certificates of insurance evidencing the Prime Contractor's and any subcontractors' Commercial General Liability Insurance shall be issued to the Railroad and the Department at the addresses below, and forwarded to the Department for its review and transmittal to the Railroad. The certificates of insurance shall state that the insurance coverage will not be suspended, voided, canceled, or reduced in coverage or limits without (30) days advance written notice to Railroad and the Department. No work will be permitted by Railroad on its right-of-way until it has reviewed and approved the evidence of insurance required herein.

DEPARTMENT:

_____
_____
_____
_____

RAILROAD:
Risk Management
Norfolk Southern Railway Company
Three Commercial Place
Norfolk, Virginia 23510-2191

D. The insurance required herein shall in no way serve to limit the liability of Department or its Contractors under the terms of this agreement.

E. Insurance Submission Procedures

1. Norfolk Southern will only accept initial insurance submissions via US Mail or Overnight carrier to the address noted in C above. NS will NOT accept initial insurance submissions via email or faxes.

2. Norfolk Southern requires the following two (2) forms of insurance in the initial insurance submission to be submitted under a cover letter providing details of the project and contact information:

   a. The original or certified true copy of the railroad protective liability insurance policy.

   b. The contractor's commercial general, automobile, and workers' compensation liability insurance certificate of liability insurance evidencing a combined single limit of a minimum of $2M per occurrence of general and $1M per occurrence of automobile liability insurance naming Norfolk Southern Railway Company, Three Commercial Place, Norfolk, VA 23510 as the certificate holder and as an additional insured on both the general and automobile liability insurance policy.

3. Norfolk Southern does not accept notation of Railroad Protective insurance on a certificate of liability insurance form or Binders as Norfolk Southern must have the full original countersigned policy. Norfolk Southern understands that this can

typically take a minimum of 30-45 days to receive for review. Please also note that mere receipt is not the only issue but review for compliance, which Norfolk Southern has 10 business days from receipt to respond.

15. FAILURE TO COMPLY:

A. In the event the Contractor violates or fails to comply with any of the requirements of these Special Provisions:

1. The Railroad Engineer may require that the Contractor vacate Railroad property.

2. The Engineer may withhold all monies due the Contractor on monthly statements.

B. Any such orders shall remain in effect until the Contractor has remedied the situation to the satisfaction of the Railroad Engineer and the Engineer.

16. PAYMENT FOR COST OF COMPLIANCE:

A. No separate payment will be made for any extra cost incurred on account of compliance with these special provisions. All such costs shall be included in prices bid for other items of the work as specified in the payment items.

17. PROJECT INFORMATION

A. Date: _____
B. NS File No.: _____
C. NS Milepost: _____
D. Department's Project No.: _____

Waits, Sharon

From: Kuyrkendall, Bert
Sent: Friday, May 17, 2013 3:09 PM
To: Waits, Sharon
Subject: FW: Chain Park Permit (NS File No. BR0011777) Hattiesburg, Mississippi
Attachments: BR0011777 - DRAFT Agreement - Hattiesburg MS - Chain Park Trail.pdf

Sharon, please add to the first June council agenda. Thanks--Bert

---

From: Kuyrkendall, Bert
Sent: Friday, May 17, 2013 3:08 PM
To: Geoffrey Crosby
Cc: 'Toby Barker'; 'Chad Newell'
Subject: FW: Chain Park Permit (NS File No. BR0011777) Hattiesburg, Mississippi

Toby and Chad, thank you for your help on this.
Bert

From: Kuyrkendall, Bert
Sent: Friday, May 17, 2013 3:07 PM
To: 'Whittingham, Clay'; Leon Jackson (ernest.jackson@nscorp.com)
Cc: Walicki, Matt
Subject: RE: Chain Park Permit (NS File No. BR0011777) Hattiesburg, Mississippi

Mr. Whittingham and Mr. Jackson, thank you for expediting this permit process. I will place the agreement on the next City Council agenda (in June) to authorize the Mayor to sign two copies and then forward to Atlanta.

Thank you for your work on this,
Bert K.

Bertran Kuyrkendall, PE, CNU-A, LEED Green Associate
Director of Engineering, City of Hattiesburg
P.O. Box 1898 |Hattiesburg, MS 39403-1898 |601-545-4640
bkuyrkendall@hattiesburgms.com |www.hattiesburgms.com

Continuing to invest in HATTIESBURG

"...the built envrionment is the embodiment of what we love, our imagination, and our will. It is what we value and reflects what and whom we care about."

From: Whittingham, Clay [mailto:Clay.Whittingham@aecom.com]
Sent: Friday, May 17, 2013 1:21 PM
To: Kuyrkendall, Bert; Leon Jackson (ernest.jackson@nscorp.com)

Cc: Walicki, Matt
Subject: Chain Park Permit (NS File No. BR0011777) Hattiesburg, Mississippi

Mr. Kuyrkendall,

Please find attached a draft copy of the Engineering Agreement for the construction of the Chain Park Trial in Hattiesburg, MS. If acceptable please print and sign two copies and return both counterparts to E. Leon Jackson at the following address for execution by the railroad:

E. Leon Jackson
Engineer Public Improvements
Norfolk Southern Corporation
1200 Peachtree Street, N. E.
Atlanta, Georgia 30309

Once signed one (1) fully executed agreement will be returned for your records. If you have any questions please feel free to give me a call at 404-946-9520.

Clay Whittingham

AECOM
1360 Peachtree Street NE, Suite 500
Atlanta, Georgia 30309
Direct: 404-946-9520
Cell: 404-444-2245

City of Hattiesburg, MS

200 Forrest St.
P.O. Box 1898
Hattiesburg, MS 39401

Master

File Number: 2013-0306

File ID: 2013-0306 **Type:** Regular Agenda Item **Status:** Agenda Ready

Version: 1 **Reference:** **In Control:** City Council

File Created: 05/28/2013

Brief Title: Authorize Mayor to execute Professional Services Agreement with Shows, Dearman & Waits, Inc. for engineering services on the W. L. Runnels Drive project.

Final Action: 06/04/2013

Minute Book Number: MB2013-160

Title:

Authorize Mayor to execute duplicate originals of a Professional Services Agreement with Shows, Dearman & Waits, Inc. for design and construction engineering services for the extension of water and sewer services on W. L. Runnels Drive.

Notes: 075695.7220.03
15% of construction cost

Sponsors:

Enactment Date:

Attachments: SDW Agreement, SDW Agreement Letter, executed SDW Agreement

Enactment Number:

Contact:

Meeting Date: 06/04/2013

Drafter: Sharon Waits

Effective Date:

History of Legislative File

Version:	Acting Body:	Date:	Action:	Sent To:	Due Date:	Return Date:	Result:
1	City Council	06/04/2013	Authorize				Pass

Action Text: A MOTION was made by Council Member Carroll and seconded by Council Member Delgado to Authorize Mayor to execute duplicate originals of a Professional Services Agreement with Shows, Dearman & Waits, Inc. for design and construction engineering services for the extension of water and sewer services on W. L. Runnels Drive.

There being no discussion, the Motion received the affirmative vote of the Council as follows:

Yeas: 3 - Bradley, Delgado and Carroll

Nays: 0

Absent: 2 - Ware and Naylor

Yea:	3	President Bradley
		Council Member Delgado
		Council Member Carroll
ΓEL-No Vote:	0	

Text of Legislative File 2013-0306

Title

Authorize Mayor to execute duplicate originals of a Professional Services Agreement with Shows, Dearman & Waits, Inc. for design and construction engineering services for the extension of water and sewer services on W. L. Runnels Drive.

Summary

Authorize Mayor to execute Professional Services Agreement with Shows, Dearman & Waits, Inc. for engineering services on the W. L. Runnels Drive project.

Budget Information

075695.7220.03

Expenditure Type

Regular budget item

Purchasing Item

Publication Information

STANDARD FORM of AGREEMENT between OWNER and ENGINEER for PROFESSIONAL SERVICES

Prepared by

ENGINEERS JOINT CONTRACT DOCUMENTS COMMITTEE

and Issued and Published Jointly by

ACEC
American Council of Engineering Companies of North Carolina

ASCE American Society of Civil Engineers
PUBLICATIONS

National Society of Professional Engineers®

PROFESSIONAL ENGINEERS in PRIVATE PRACTICE
a practice division of the
NATIONAL SOCIETY of PROFESSIONAL ENGINEERS

AMERICAN CONSULTING ENGINEERS COUNCIL

AMERICAN SOCIETY OF CIVIL ENGINEERS

This Agreement has been prepared for use with the Standard General Conditions of the Construction Contract (No. 1910-8, 1996 Edition) of the Engineers Joint Contract Documents Committee. Their provisions are interrelated, and a change in one may necessitate a change in the other. For guidance in the preparation of Supplementary Conditions, see Guide to the Preparation of Supplementary Conditions (No. 1910-17) (1996 Edition). For guidance on the completion and use of this Agreement, see EJCDC Users Guide, No. 1910-50.

EJCDE No. 1910-1 (1996 Edition)

Copyright © 2002 National Society of Professional Engineers
1420 King Street, Alexandria, VA 22314

American Council of Engineering Companies
1015 15th Street N.W., Washington, DC 20005

American Society of Civil Engineers
1801 Alexander Bell Drive, Reston, VA 20191-4400

Copyright © 2002 National Society of Professional Engineers for EJCDC. All rights reserved.

STANDARD FORM of AGREEMENT BETWEEN OWNER and ENGINEER for PROFESSIONAL SERVICES

THIS IS AN AGREEMENT effective as of _____, 2013 ("Effective Date")

between **City of Hattiesburg**, ("OWNER"), and

SHOWS, DEARMAN & WAITS, Inc., ("ENGINEER").

OWNER intends to: **Extend water and sewer mains approximately 1,500 linear feet from existing services on W. L. Runnels Drive. Engineer will be responsible for design and construction engineering.** ("Project").

OWNER and ENGINEER in consideration of their mutual covenants as set forth herein agrees as follows:

1.01 Basic Agreement

A. Engineer shall provide, or cause to be provided, the services set forth in this Agreement, and Owner shall pay Engineer for such Services as set forth in Paragraph 9.01.

2.01 Payment Procedures

A. *Preparation of Invoices.* Engineer will prepare a monthly invoice in accordance with Engineer's standard invoicing practices and submit the invoice to Owner.

B. *Payment of Invoices.* Invoices are due and payable within 30 days of receipt. If Owner fails to make any payment due Engineer for services and expenses within 30 days after receipt of Engineer's invoice, the amounts due Engineer will be increased at the rate of 1.0% per month (or the maximum rate of interest permitted by law, if less) from said thirtieth day. In addition, Engineer may, without liability, after giving seven days written notice to Owner, suspend services under this Agreement until Engineer has been paid in full all amounts due for services, expenses, and other related charges. Payments will be credited first to interest and then to principal.

3.01 Additional Services

A. If authorized by Owner, or if required because of changes in the Project, Engineer shall furnish services in addition to those set forth above.

B. Owner shall pay Engineer for such additional services as follows: For additional services of Engineer's employees engaged directly on the Project an amount equal to the cumulative hours charged to the Project by each class of Engineer's employees times standard hourly rates for each applicable billing class; plus reimbursable expenses and Engineer's consultants' charges, if any.

4.01 Termination

A. The obligation to provide further services under this Agreement may be terminated:

1. For cause,

a. By either party upon 30 days written notice in the event of substantial failure by the other party to perform in accordance with the Agreement's terms through no fault of the terminating party.

b. By Engineer:

1) upon seven days written notice if Engineer believes that Engineer is being requested by Owner to furnish or perform services contrary to Engineer's

responsibilities as a licensed professional; or

2) upon seven days written notice if the Engineer's services for the Project are delayed or suspended for more than 90 days for reasons beyond Engineer's control.

3) Engineer shall have no liability to Owner on account of such termination.

c. Notwithstanding the foregoing, this Agreement will not terminate as a result of a substantial failure under paragraph 4.01.*A.1.a* if the party receiving such notice begins, within seven days of receipt of such notice, to correct its failure and proceeds diligently to cure such failure within no more than 30 days of receipt of notice; provided, however, that if and to the extent such substantial failure cannot be reasonably cured within such 30 day period, and if such party has diligently attempted to cure the same and thereafter continues diligently to cure the same, then the cure period provided for herein shall extend up to, but in no case more than, 60 days after the date of receipt of the notice.

2. For convenience, by Owner effective upon the receipt of notice by Engineer.

B. The terminating party under paragraphs 4.01.*A.1* or 4.01.*A.2* may set the effective date of termination at a time up to 30 days later than otherwise provided to allow Engineer to demobilize personnel and equipment from the Project site, to complete tasks whose value would otherwise be lost, to prepare notes as to the status of completed and uncompleted tasks, and to assemble Project materials in orderly files.

5.01 Controlling Law

A. This Agreement is to be governed by the law of the state in which the Project is located.

6.01 Successors, Assigns, and Beneficiaries

A. Owner and Engineer each is hereby bound and the partners, successors, executors, administrators, and legal representatives of Owner and Engineer (and to the extent permitted by paragraph 6.01.*B* the assigns of Owner and Engineer) are hereby bound to the other party to this Agreement and to the partners, successors, executors, administrators, and legal representatives (and said assigns) of such other party, in respect of all covenants, agreements, and obligations of this Agreement.

B. Neither Owner nor Engineer may assign, sublet, or transfer any rights under or interest (including, but without limitation, moneys that are due or may become due) in this Agreement without the written consent of the other, except to the extent that any assignment, subletting, or transfer is mandated or restricted by law. Unless specifically stated to the contrary in any written consent to an assignment, no assignment will release or discharge the assignor from any duty or responsibility under this Agreement.

7.01 General Considerations

A. The standard of care for all professional engineering and related services performed or furnished by Engineer under this Agreement will be the care and skill ordinarily used by members of the subject profession practicing under similar circumstances at the same time and in the same locality. Engineer makes no warranties, express or implied, under this Agreement or otherwise, in connection with Engineer's services. Engineer and its consultants may use or rely upon the design services of others, including, but not limited to, contractors, manufacturers, and suppliers.

B. Engineer shall not at any time supervise, direct, or have control over any contractor's work, nor shall Engineer have authority over or responsibility for the means, methods, techniques, sequences, or procedures of construction selected or used by any contractor, for safety precautions and programs incident to a contractor's work progress, nor for any failure of any contractor to comply with laws and regulations applicable to contractor's work.

C. Engineer neither guarantees the performance of any contractor nor assumes responsibility for any contractor's failure to furnish and perform its work in accordance with the contract between Owner and such contractor.

D. Engineer shall not be responsible for the acts or omissions of any contractor, subcontractor, or supplier, or of any contractor's agents or employees or any other persons (except Engineer's own employees) at the Project site or otherwise furnishing or performing any of construction work; or for any decision made on interpretations or clarifications of the construction contract given by Owner without consultation and advice of Engineer.

E. The general conditions for any construction contract documents prepared hereunder are to be the "Standard General Conditions of the Construction Contract@ as prepared by the Engineers Joint Contract Documents Committee (No. C-700, 2002 Edition).

F. All design documents prepared or furnished by Engineer are instruments of service, and Engineer retains an ownership and property interest (including the copyright and the right of reuse) in such documents, whether or not the Project is completed.

G. To the fullest extent permitted by law, Owner and Engineer (1) waive against each other, and the other's employees, officers, directors, agents, insurers, partners, and consultants, any and all claims for or entitlement to special, incidental, indirect, or consequential damages arising out of, resulting from, or in any way related to the Project, and (2) agree that Engineer's total liability to Owner under this Agreement shall be limited to $50,000 or the total amount of compensation received by Engineer, whichever is greater.

H. The parties acknowledge that Engineer's scope of services does not include any services related to a Hazardous Environmental Condition (the presence of asbestos, PCBs, petroleum, hazardous substances or waste, and radioactive materials). If Engineer or any other party encounters a Hazardous Environmental Condition, Engineer may, at its option and without liability for consequential or any other damages, suspend performance of services on the portion of the Project affected thereby until Owner: (i) retains appropriate specialist consultants or contractors to identify and, as appropriate, abate, remediate, or remove the Hazardous Environmental Condition; and (ii) warrants that the Site is in full compliance with applicable Laws and Regulations.

8.01 Total Agreement

A. This Agreement (consisting of pages 1 to 4 inclusive together with any expressly incorporated appendix), constitutes the entire agreement between Owner and Engineer and supersedes all prior written or oral understandings. This Agreement may only be amended, supplemented, modified, or canceled by a duly executed written instrument.

9.01 Payment (Percentage of Construction Cost)

A. Using the procedures set forth in paragraph 2.01, Owner shall pay Engineer as follows:

1) An amount equal to 9 Percent of the cost to construct the work designed or specified by the Engineer ("Construction Cost"). This amount includes compensation for Engineer's Services and services of Engineer's consultants, if any in relation to the design aspect of the project. The percentage of Construction Cost noted herein accounts for labor, overhead, profit, and reimbursable expenses.

2) As a basis for payment to Engineer, Construction Cost will be based on one or more of the following determinations with precedence in the order listed:

a) For work designed or specified by Engineer and incorporated in the completed Project, the actual final cost of the work performed by Contractor.

b) For work designed or specified by Engineer but not constructed, the lowest bona fide bid received from a qualified bidder for such work; or, if the work is not bid, the lowest bona fide negotiated proposal or contractor's estimate for such work.

c) For work designed or specified but not constructed, upon which no bid, proposal, or estimate is received, Engineer's most recent opinion of probable Construction Cost.

B. *Resident Project Representative Services.* For services of ENGINEER's resident project representative, if any, an amount equal to the ENGINEER's salary costs times a factor of 3 for services of ENGINEER's employees engaged directly in resident project representation.

C. The Engineer's compensation is conditioned on the time to complete construction not exceeding 9 months. Should the time to complete construction be extended beyond this period, total compensation to Engineer shall be appropriately adjusted.

IN WITNESS WHEREOF, the parties hereto have executed this Agreement, the Effective Date of which is indicated on page 1.

sdw Engineering Progress

OWNER: **City of Hattiesburg**	ENGINEER: **SHOWS, DEARMAN & WAITS, Inc.**
By:	By:
Johnny L. Dupree	Kyle D. Wallace, P.E.
Title: Mayor	Title: Vice President
Date Signed:	Date Signed: 5/28/2013
	License or Certificate No. and State: 12693 - MS
Address for giving notices:	Address for giving notices:
P.O. Box 1898	301 Second Avenue
Hattiesburg, MS 39403	Hattiesburg, MS 39401

sdw

Engineering Progress

May 28, 2013

City of Hattiesburg
P.O. Box 1898
Hattiesburg, MS 39403

Attn: Bert Kuyrkendall, P.E.

Re: Runnels Road Water and Sewer Extension
City of Hattiesburg

Dear Mr. Kuyrkendall:

Enclosed please find two (2) copies of the **revised** Standard Form of Agreement between Owner and Engineer for Professional Services for the above referenced project. Please have the Mayor execute and return one (1) copy to our office.

Should you have any questions or comments, please do not hesitate to call.

Sincerely,

Kyle D. Wallace, P.E.
Project Engineer

/rs

Enclosure

301 Second Ave. | Hattiesburg, MS 39401 | (p) 601.544.1821 | (f) 601.544.0501 | sd-w.com

STANDARD FORM of AGREEMENT between OWNER and ENGINEER for PROFESSIONAL SERVICES

Prepared by

ENGINEERS JOINT CONTRACT DOCUMENTS COMMITTEE

and Issued and Published Jointly by

ACEC
American Council of Engineering Companies
of North Carolina

ASCE American Society of Civil Engineers
PUBLICATIONS

National Society of Professional Engineers®

PROFESSIONAL ENGINEERS in PRIVATE PRACTICE
a practice division of the
NATIONAL SOCIETY of PROFESSIONAL ENGINEERS

AMERICAN CONSULTING ENGINEERS COUNCIL

AMERICAN SOCIETY OF CIVIL ENGINEERS

This Agreement has been prepared for use with the Standard General Conditions of the Construction Contract (No. 1910-8, 1996 Edition) of the Engineers Joint Contract Documents Committee. Their provisions are interrelated, and a change in one may necessitate a change in the other. For guidance in the preparation of Supplementary Conditions, see Guide to the Preparation of Supplementary Conditions (No. 1910-17) (1996 Edition). For guidance on the completion and use of this Agreement, see EJCDC Users Guide, No. 1910-50.

EJCDE No. 1910-1 (1996 Edition)

Copyright © 2002 National Society of Professional Engineers
1420 King Street, Alexandria, VA 22314

American Council of Engineering Companies
1015 15th Street N.W., Washington, DC 20005

American Society of Civil Engineers
1801 Alexander Bell Drive, Reston, VA 20191-4400

Copyright © 2002 National Society of Professional Engineers for EJCDC. All rights reserved.

STANDARD FORM of AGREEMENT BETWEEN OWNER and ENGINEER for PROFESSIONAL SERVICES

THIS IS AN AGREEMENT effective as of _____, 2013 ("Effective Date")

between **City of Hattiesburg**, ("OWNER"), and

SHOWS, DEARMAN & WAITS, Inc., ("ENGINEER").

OWNER intends to: **Extend water and sewer mains approximately 1,500 linear feet from existing services on W. L. Runnels Drive. Engineer will be responsible for design and construction engineering.** ("Project").

OWNER and ENGINEER in consideration of their mutual covenants as set forth herein agrees as follows:

1.01 Basic Agreement

A. Engineer shall provide, or cause to be provided, the services set forth in this Agreement, and Owner shall pay Engineer for such Services as set forth in Paragraph 9.01.

2.01 Payment Procedures

A. *Preparation of Invoices.* Engineer will prepare a monthly invoice in accordance with Engineer's standard invoicing practices and submit the invoice to Owner.

B. *Payment of Invoices.* Invoices are due and payable within 30 days of receipt. If Owner fails to make any payment due Engineer for services and expenses within 30 days after receipt of Engineer's invoice, the amounts due Engineer will be increased at the rate of 1.0% per month (or the maximum rate of interest permitted by law, if less) from said thirtieth day. In addition, Engineer may, without liability, after giving seven days written notice to Owner, suspend services under this Agreement until Engineer has been paid in full all amounts due for services, expenses, and other related charges. Payments will be credited first to interest and then to principal.

3.01 Additional Services

A. If authorized by Owner, or if required because of changes in the Project, Engineer shall furnish services in addition to those set forth above.

B. Owner shall pay Engineer for such additional services as follows: For additional services of Engineer's employees engaged directly on the Project an amount equal to the cumulative hours charged to the Project by each class of Engineer's employees times standard hourly rates for each applicable billing class; plus reimbursable expenses and Engineer's consultants' charges, if any.

4.01 Termination

A. The obligation to provide further services under this Agreement may be terminated:

1. For cause,

a. By either party upon 30 days written notice in the event of substantial failure by the other party to perform in accordance with the Agreement's terms through no fault of the terminating party.

b. By Engineer:

1) upon seven days written notice if Engineer believes that Engineer is being requested by Owner to furnish or perform services contrary to Engineer's

responsibilities as a licensed professional; or

2) upon seven days written notice if the Engineer's services for the Project are delayed or suspended for more than 90 days for reasons beyond Engineer's control.

3) Engineer shall have no liability to Owner on account of such termination.

c. Notwithstanding the foregoing, this Agreement will not terminate as a result of a substantial failure under paragraph 4.01.*A.1.a* if the party receiving such notice begins, within seven days of receipt of such notice, to correct its failure and proceeds diligently to cure such failure within no more than 30 days of receipt of notice; provided, however, that if and to the extent such substantial failure cannot be reasonably cured within such 30 day period, and if such party has diligently attempted to cure the same and thereafter continues diligently to cure the same, then the cure period provided for herein shall extend up to, but in no case more than, 60 days after the date of receipt of the notice.

2. For convenience, by Owner effective upon the receipt of notice by Engineer.

B. The terminating party under paragraphs 4.01.*A.1* or 4.01.*A.2* may set the effective date of termination at a time up to 30 days later than otherwise provided to allow Engineer to demobilize personnel and equipment from the Project site, to complete tasks whose value would otherwise be lost, to prepare notes as to the status of completed and uncompleted tasks, and to assemble Project materials in orderly files.

5.01 Controlling Law

A. This Agreement is to be governed by the law of the state in which the Project is located.

6.01 Successors, Assigns, and Beneficiaries

A. Owner and Engineer each is hereby bound and the partners, successors, executors, administrators, and legal representatives of Owner and Engineer (and to the extent permitted by paragraph 6.01.*B* the assigns of Owner and Engineer) are hereby bound to the other party to this Agreement and to the partners, successors, executors, administrators, and legal representatives (and said assigns) of such other party, in respect of all covenants, agreements, and obligations of this Agreement.

B. Neither Owner nor Engineer may assign, sublet, or transfer any rights under or interest (including, but without limitation, moneys that are due or may become due) in this Agreement without the written consent of the other, except to the extent that any assignment, subletting, or transfer is mandated or restricted by law. Unless specifically stated to the contrary in any written consent to an assignment, no assignment will release or discharge the assignor from any duty or responsibility under this Agreement.

7.01 General Considerations

A. The standard of care for all professional engineering and related services performed or furnished by Engineer under this Agreement will be the care and skill ordinarily used by members of the subject profession practicing under similar circumstances at the same time and in the same locality. Engineer makes no warranties, express or implied, under this Agreement or otherwise, in connection with Engineer's services. Engineer and its consultants may use or rely upon the design services of others, including, but not limited to, contractors, manufacturers, and suppliers.

B. Engineer shall not at any time supervise, direct, or have control over any contractor's work, nor shall Engineer have authority over or responsibility for the means, methods, techniques, sequences, or procedures of construction selected or used by any contractor, for safety precautions and programs incident to a contractor's work progress, nor for any failure of any contractor to comply with laws and regulations applicable to contractor's work.

C. Engineer neither guarantees the performance of any contractor nor assumes responsibility for any contractor's failure to furnish and perform its work in accordance with the contract between Owner and such contractor.

D. Engineer shall not be responsible for the acts or omissions of any contractor, subcontractor, or supplier, or of any contractor's agents or employees or any other persons (except Engineer's own employees) at the Project site or otherwise furnishing or performing any of construction work; or for any decision made on interpretations or clarifications of the construction contract given by Owner without consultation and advice of Engineer.

E. The general conditions for any construction contract documents prepared hereunder are to be the "Standard General Conditions of the Construction Contract@ as prepared by the Engineers Joint Contract Documents Committee (No. C-700, 2002 Edition).

F. All design documents prepared or furnished by Engineer are instruments of service, and Engineer retains an ownership and property interest (including the copyright and the right of reuse) in such documents, whether or not the Project is completed.

G. To the fullest extent permitted by law, Owner and Engineer (1) waive against each other, and the other's employees, officers, directors, agents, insurers, partners, and consultants, any and all claims for or entitlement to special, incidental, indirect, or consequential damages arising out of, resulting from, or in any way related to the Project, and (2) agree that Engineer's total liability to Owner under this Agreement shall be limited to $50,000 or the total amount of compensation received by Engineer, whichever is greater.

H. The parties acknowledge that Engineer's scope of services does not include any services related to a Hazardous Environmental Condition (the presence of asbestos, PCBs, petroleum, hazardous substances or waste, and radioactive materials). If Engineer or any other party encounters a Hazardous Environmental Condition, Engineer may, at its option and without liability for consequential or any other damages, suspend performance of services on the portion of the Project affected thereby until Owner: (i) retains appropriate specialist consultants or contractors to identify and, as appropriate, abate, remediate, or remove the Hazardous Environmental Condition; and (ii) warrants that the Site is in full compliance with applicable Laws and Regulations.

8.01 Total Agreement

A. This Agreement (consisting of pages 1 to 4 inclusive together with any expressly incorporated appendix), constitutes the entire agreement between Owner and Engineer and supersedes all prior written or oral understandings. This Agreement may only be amended, supplemented, modified, or canceled by a duly executed written instrument.

9.01 Payment (Percentage of Construction Cost)

A. Using the procedures set forth in paragraph 2.01, Owner shall pay Engineer as follows:

1) An amount equal to 9 Percent of the cost to construct the work designed or specified by the Engineer ("Construction Cost"). This amount includes compensation for Engineer's Services and services of Engineer's consultants, if any in relation to the design aspect of the project. The percentage of Construction Cost noted herein accounts for labor, overhead, profit, and reimbursable expenses.

2) As a basis for payment to Engineer, Construction Cost will be based on one or more of the following determinations with precedence in the order listed:

a) For work designed or specified by Engineer and incorporated in the completed Project, the actual final cost of the work performed by Contractor.

b) For work designed or specified by Engineer but not constructed, the lowest bona fide bid received from a qualified bidder for such work; or, if the work is not bid, the lowest bona fide negotiated proposal or contractor's estimate for such work.

c) For work designed or specified but not constructed, upon which no bid, proposal, or estimate is received, Engineer's most recent opinion of probable Construction Cost.

B. *Resident Project Representative Services.* For services of ENGINEER's resident project representative, if any, an amount equal to the ENGINEER's salary costs times a factor of 3 for services of ENGINEER's employees engaged directly in resident project representation.

C. The Engineer's compensation is conditioned on the time to complete construction not exceeding 9 months. Should the time to complete construction be extended beyond this period, total compensation to Engineer shall be appropriately adjusted.

IN WITNESS WHEREOF, the parties hereto have executed this Agreement, the Effective Date of which is indicated on page 1.

sdw Engineering Progress

OWNER: **City of Hattiesburg**

By: Johnny L. Dupree

Title: Mayor

Date Signed: 6/04/13

Address for giving notices:

P.O. Box 1898

Hattiesburg, MS 39403

ENGINEER: **SHOWS, DEARMAN & WAITS, Inc.**

By: Kyle D. Wallace, P.E.

Title: Vice President

Date Signed: 5/28/2013

License or Certificate No. and State: 12693 - MS

Address for giving notices:

301 Second Avenue

Hattiesburg, MS 39401

City of Hattiesburg, MS

200 Forrest St.
P.O. Box 1898
Hattiesburg, MS 39401

Master

File Number: 2013-0314

File ID:	2013-0314	**Type:**	Regular Agenda Item	**Status:**	Agenda Ready
Version:	1	**Reference:**		**In Control:**	City Council
				File Created:	05/29/2013
Brief Title:	2013 Hattiesburg Civic Arts Council Agreement			**Final Action:**	06/04/2013
				Minute Book Number:	MB2013-160

Title:

Authorize Mayor to execute duplicate original agreement between City of Hattiesburg Parks and Recreation Department and Hattiesburg Arts Council to provide art for children programs and art and cultural opportunities for adults, seniors, and persons with disabilities for Hattiesburg residents. This program will operate October 1, 2012, through September 30, 2013. (Nunc Pro Tunc)

Notes:

Sponsors:		**Enactment Date:**	
Attachments:	Hattiesburg Civic Arts Council Contract 2013, executed Hattiesburg Civic Arts Council Contract 2013	**Enactment Number:**	
Contact:		**Meeting Date:**	06/04/2013
Drafter:	Ann Jones	**Effective Date:**	

History of Legislative File

Version:	Acting Body:	Date:	Action:	Sent To:	Due Date:	Return Date:	Result:
1	City Council	06/04/2013	Authorize				Pass

Action Text: A MOTION was made by Council Member Carroll and seconded by Council Member Delgado to Authorize Mayor to execute duplicate original agreement between City of Hattiesburg Parks and Recreation Department and Hattiesburg Arts Council to provide art for children programs and art and cultural opportunities for adults, seniors, and persons with disabilities for Hattiesburg residents. This program will operate October 1, 2012, through September 30, 2013. (Nunc Pro Tunc)

There being no discussion, the Motion received the affirmative vote of the Council as follows:

Yeas: 3 - Bradley, Delgado and Carroll

Nays: 0

Absent: 2 - Ware and Naylor

Yea:	3	President Bradley
		Council Member Delgado
		Council Member Carroll
ΓEL-No Vote:	0	

Text of Legislative File 2013-0314

Title

Authorize Mayor to execute duplicate original agreement between City of Hattiesburg Parks and Recreation Department and Hattiesburg Arts Council to provide art for children programs and art and cultural opportunities for adults, seniors, and persons with disabilities for Hattiesburg residents. This program will operate October 1, 2012, through September 30, 2013. (Nunc Pro Tunc)

Summary

2013 Hattiesburg Arts Council Agreement

Budget Information

002315.6049

Expenditure Type

Regular Budget Item

Purchasing Item

Publication Information

STATE OF MISSISSIPPI

COUNTY OF FORREST

AGREEMENT

WHEREAS, the **Hattiesburg Arts Council**, formerly the **Hattiesburg Civic Arts Council**, hereinafter referred to as "**Council**" and the **City of Hattiesburg, Mississippi**, a municipal corporation, hereinafter referred to as "**City**", has entered into discussion with view of **Council** providing art for children programs and art and cultural opportunities for adults, seniors, and persons with disabilities in the Hattiesburg area, and the parties hereto desire to reduce to writing their agreement of understanding with a properly executed copy of Agreement provided to each party.

Council and **City** do hereby agree and obligate themselves as follows, to-wit:

I.

Council will provide art for children and art and cultural opportunities for adults, seniors, and persons with disabilities program for residents of the Hattiesburg area, for a period beginning on the 1st **day of October 2012** and termination on the **30th day of September 2013. Council** shall be responsible for operation of the art program including, but not limited to organization, obtaining instructors, supplies, and other related duties and responsibilities.

II.

City shall be responsible for providing space for this art program at the Hattiesburg Recreation Center, the C.E. Roy Center, and other venues as available, signing up participants, limiting rosters to no more than thirty (30) children preprimary and per intermediate sessions, collection of fees, and providing to the **Council** an amount not to exceed **Six Thousand Dollars ($6,000.00),** for the purpose of defraying a portion of the expenses incurred by the Council for the conduct of this program. The appropriate expenditure reports shall be completed and filed with the **City Clerks** by October 31, 2013.

III.

Council does hereby obligate itself to comply with the policies of the **City** that all recreation programs shall be open to all citizens of the Hattiesburg area regardless of his/her ability to pay any fees charged for participation in said programs. **Council** does further obligate itself, in the event availability of the program is limited due to the number of applicants, city residents must receive priority for acceptance in the program.

IV.

It is understood by and between parties that this Agreement may be terminated by either party for any reason upon thirty (30) days written notice of their intention to terminate this Agreement.

V.

WITNESS OUR SIGNATURES, on duplicate originals, on this, the _____ day of _____, A.D., _____.

HATTIESBURG ARTS COUNCIL
(formerly the – HATTIESBURG CIVIC ARTS COUNCIL)

_____
PATTY HALL, DIRECTOR

CITY OF HATTIESBURG, MISSISSIPPI

_____
MAYOR

ATTEST:

_____
EDDIE MYERS, CITY CLERK

(S E A L)

STATE OF MISSISSIPPI

COUNTY OF FORREST

AGREEMENT

WHEREAS, the **Hattiesburg Arts Council**, formerly the **Hattiesburg Civic Arts Council**, hereinafter referred to as "**Council**" and the **City of Hattiesburg, Mississippi**, a municipal corporation, hereinafter referred to as "**City**", has entered into discussion with view of Council providing art for children programs and art and cultural opportunities for adults, seniors, and persons with disabilities in the Hattiesburg area, and the parties hereto desire to reduce to writing their agreement of understanding with a properly executed copy of Agreement provided to each party.

Council and **City** do hereby agree and obligate themselves as follows, to-wit:

I.

Council will provide art for children and art and cultural opportunities for adults, seniors, and persons with disabilities program for residents of the Hattiesburg area, for a period beginning on the 1st **day of October 2012** and termination on the **30th day of September 2013. Council** shall be responsible for operation of the art program including, but not limited to organization, obtaining instructors, supplies, and other related duties and responsibilities.

II.

City shall be responsible for providing space for this art program at the Hattiesburg Recreation Center, the C.E. Roy Center, and other venues as available, signing up participants, limiting rosters to no more than thirty (30) children preprimary and per intermediate sessions, collection of fees, and providing to the **Council** an amount not to exceed **Six Thousand Dollars ($6,000.00)**, for the purpose of defraying a portion of the expenses incurred by the Council for the conduct of this program. The appropriate expenditure reports shall be completed and filed with the **City Clerks** by October 31, 2013.

III.

Council does hereby obligate itself to comply with the policies of the City that all recreation programs shall be open to all citizens of the Hattiesburg area regardless of his/her ability to pay any fees charged for participation in said programs. Council does further obligate itself, in the event availability of the program is limited due to the number of applicants, city residents must receive priority for acceptance in the program.

IV.

It is understood by and between parties that this Agreement may be terminated by either party for any reason upon thirty (30) days written notice of their intention to terminate this Agreement.

V.

WITNESS OUR SIGNATURES, on duplicate originals, on this, the 4th day of June, A.D., 2013.

HATTIESBURG ARTS COUNCIL
(formerly the - HATTIESBURG CIVIC ARTS COUNCIL)

_____
PATTY HALL, DIRECTOR

CITY OF HATTIESBURG, MISSISSIPPI

_____
MAYOR

ATTEST:

_____
EDDIE MYERS, CITY CLERK

(SEAL)

City of Hattiesburg, MS

200 Forrest St.
P.O. Box 1898
Hattiesburg, MS 39401

Master

File Number: 2013-0300

File ID:	2013-0300	**Type:**	Regular Agenda Item	**Status:**	Agenda Ready
Version:	1	**Reference:**		**In Control:**	City Council
				File Created:	05/23/2013
Brief Title:	Monthly budget report for May, 2013			**Final Action:**	
				Minute Book Number:	MB2013-162

Title:

Acknowledge receipt of the monthly budget report for the month ending May 31, 2013, on permanent file in the City Clerk's Office.

Notes:

Sponsors:		**Enactment Date:**	
Attachments:	Copy of All Expenditures MAY 2013, Copy of All Revenues May 2013	**Enactment Number:**	
Contact:		**Meeting Date:**	06/04/2013
Drafter:	Marilyn Schwandt	**Effective Date:**	

History of Legislative File

Version:	Acting Body:	Date:	Action:	Sent To:	Due Date:	Return Date:	Result:
1	City Council	06/04/2013					

Text of Legislative File 2013-0300

Title

Acknowledge receipt of the monthly budget report for the month ending May 31, 2013, on permanent file in the City Clerk's Office.

Summary

Budget Information

Expenditure Type

Purchasing Item

Publication Information

			CITY OF HATTIESBURG							
	001003 - GENERAL FUND-CITY COUNCIL		EXPENDITURE REPORT							
			8 Months Ending 05/31/13							
THIS MONTH			ANNUAL	OPEN PO	YTD	REMAINING	PERCENT		....PROJECTED....	
ACTUAL		OBJ/SUB	BUDGET	& CONTRACTS	ACTUAL	BALANCE	PLAN	ACTUAL	OVER/UNDER	%
	_____									
	_____									
	SALARIES									
16,310	REGULAR WAGES	4000	141,040		94,205	46,835	67%	67%	267	0%
	DISASTER RECOVERY WAGE	4010								
	OVERTIME	4300								
	DISASTER RECOVERY OVER	4310								
----------			---------	---------	---------	---------	-----	-----	--------	-----
16,310	**SALARIES**		**141,040**		**94,205**	**46,835**	**67%**	**67%**	**267**	**0%**
	EMPLOYEE BENEFITS									
2,156	STATE RETIREMENT	4600	18,835		12,936	5,899	67%	69%	569	3%
1,185	F.I.C.A. TAXES	4700	10,110		6,703	3,407	67%	66%	(55)	-1%
3,912	HOSPITALIZATION INS.	4800	31,320		20,208	11,112	67%	65%	(1,008)	-3%
	UNEMPLOYMENT BENEFITS	4900								
	WORKMAN'S COMPENSATION	4910	545			545	67%	0%	(545)	-100%
----------			---------	---------	---------	---------	-----	-----	--------	-----
7,253	**EMPLOYEE BENEFITS**		**60,810**		**39,848**	**20,962**	**67%**	**66%**	**(1,038)**	**-2%**
----------			---------	---------	---------	---------	-----	-----	--------	-----
23,563	**PERSONAL SERVICES**		**201,850**		**134,053**	**67,797**	**67%**	**66%**	**(770)**	**0%**
	_____									
	OFFICE SUPPLIES									
	PAPER	5003	600		215	385	67%	36%	(277)	-46%
	PRINTED FORMS	5005								
	OTHER EXPENDABLE OFF.S	5010	1,200		751	449	67%	63%	(73)	-6%
	MINOR OFFICE EQUIP/FUR	5020								
	PHOTO SUPPLIES	5040								
	SUBSCRIPTIONS,MAGS,MAP	5050								
	BOOKS	5070								
	COMPUTER SUPPLIES	5080	800			800	67%	0%	(800)	-100%
----------			---------	---------	---------	---------	-----	-----	--------	-----
	OFFICE SUPPLIES		**2,600**		**966**	**1,634**	**67%**	**37%**	**(1,150)**	**-44%**
	OPERATING SUPPLIES									
	CLEANING/JANITORIAL SP	5100								
	HOUSEHOLD SUPPLIES	5110	500			500	67%	0%	(500)	-100%
35	FOOD	5115	300		194	106	67%	65%	(8)	-3%
	MINOR EQUIPMENT	5460								
	OTHER OPERATING MATL/S	5590								

			CITY OF HATTIESBURG							
	001003 - GENERAL FUND-CITY COUNCIL		EXPENDITURE REPORT							
			8 Months Ending 05/31/13							
THIS MONTH			ANNUAL	OPEN PO	YTD	REMAINING	PERCENT		....PROJECTED....	
ACTUAL		OBJ/SUB	BUDGET	& CONTRACTS	ACTUAL	BALANCE	PLAN	ACTUAL	OVER/UNDER	%
---			---	---	---	---	---	---	---	---
35	**OPERATING SUPPLIES**		**800**		**194**	**606**	**67%**	**24%**	**(508)**	**-64%**
	REPAIR & MAINTENANCE SP									
	BUILDING MATERIALS & S	5600								
	MTR VEHICLE REP. PTS/S	5700								
	OTHER REPAIR/MAINT. SP	5990								
---			---	---	---	---	---	---	---	---
	REPAIR & MAINTENANCE									
---			---	---	---	---	---	---	---	---
35	**SUPPLIES AND EXPENSES**		**3,400**		**1,160**	**2,240**	**67%**	**34%**	**(1,660)**	**-49%**
	PROFESSIONAL SERVICES									
11,426	AUDITING AND ACCOUNTIN	6010	99,750		91,426	8,324	67%	92%	37,389	37%
	ARCHITECTURAL	6012								
	ENTERTAINMENT	6033								
	DATA PROCESSING	6035								
	OTHER PROFESSIONAL SER	6049								
---			---	---	---	---	---	---	---	---
11,426	**PROFESSIONAL SERVICE**		**99,750**		**91,426**	**8,324**	**67%**	**92%**	**37,389**	**37%**
	COMMUNICATIONS									
	TELEPHONE AND TELEGRAP	6060								
	POSTAGE	6070								
---			---	---	---	---	---	---	---	---
	COMMUNICATIONS									
	TRANSPORTATION									
	TRAVEL EXPENSE	6110								
	TRAVEL EXP-CLERK	6110 CLERK	2,400		514	1,886	67%	21%	(1,628)	-68%
	TRAVEL EXP-WARD 1	6110 WARD1	2,000			2,000	67%	0%	(2,000)	-100%
	TRAVEL EXP-WARD 2	6110 WARD2	1,604		1,604		67%	100%	802	50%
	TRAVEL EXP-WARD 3	6110 WARD3	2,000			2,000	67%	0%	(2,000)	-100%
	TRAVEL EXP-WARD 4	6110 WARD4	2,000			2,000	67%	0%	(2,000)	-100%
	TRAVEL EXP-WARD 5	6110 WARD5	2,000		250	1,750	67%	13%	(1,624)	-81%
---			---	---	---	---	---	---	---	---
	TRAVEL EXPENSE		**12,004**		**2,368**	**9,636**	**67%**	**20%**	**(8,452)**	**-70%**
	FREIGHT	6120	41			41	67%	0%	(41)	-100%
	MESSENGER/EXPRESS SERV	6130	100		24	76	67%	24%	(64)	-64%
---			---	---	---	---	---	---	---	---

CITY OF HATTIESBURG
001003 - GENERAL FUND-CITY COUNCIL
EXPENDITURE REPORT
8 Months Ending 05/31/13

THIS MONTH ACTUAL		OBJ/SUB	ANNUAL BUDGET	OPEN PO & CONTRACTS	YTD ACTUAL	REMAINING BALANCE	PERCENT PLAN	PERCENT ACTUAL	....PROJECTED.... OVER/UNDER	%
	TRANSPORTATION		**12,145**		**2,392**	**9,753**	**67%**	**20%**	**(8,557)**	**-70%**
	ADVERTISING									
	ADVERTISING	6150	59			59	67%	0%	(59)	-100%
	ORDINANCE EXPENSE	6160								
	ADVERTISING		**59**			**59**	**67%**	**0%**	**(59)**	**-100%**
	PRINTING AND BINDING									
	PRINTING	6200								
	BINDING	6205								
	FILM PROCESSING	6240								
	PRINTING AND BINDING									
	INSURANCE									
	PUBLIC LIAB/PROPERTY D	6255								
	SURETY AND FORGERY BON	6270	2,015			2,015	67%	0%	(2,015)	-100%
	OTHER INSURANCE	6299								
	INSURANCE		**2,015**			**2,015**	**67%**	**0%**	**(2,015)**	**-100%**
	REPR/MAINT-OUTSIDE LABO									
	OFFICE EQUIPMENT R&M	6365								
	HOUSEHOLD EQUIPMENT R&	6370								
	MINOR EQUIPMENT R&M	6382								
	MOTOR VEHICLE EQ. R&M	6384								
	OTHER REPAIRS AND MAIN	6399	1,000			1,000	67%	0%	(1,000)	-100%
	REPR/MAINT-OUTSIDE L		**1,000**			**1,000**	**67%**	**0%**	**(1,000)**	**-100%**
	RENTALS									
	OFFICE EQUIPMENT RENT	6410								
	OTHER RENT	6449								
	RENTALS									
	OTHER SERVICES & CHARGE									
	EXHIBITIONS & PROMOTIO	6500	975		14	961	67%	1%	(953)	-98%
	DUES AND MEMBERSHIPS	6840	125			125	67%	0%	(125)	-100%
	REGISTRATION FEE/TUITI	6845								
	REG FEE/TUITION-CLERK	6845 CLERK	1,000		690	310	67%	69%	35	4%
	REG FEE/TUITION-WARD	6845 WARD1	1,000			1,000	67%	0%	(1,000)	-100%

			CITY OF HATTIESBURG							
	001003 - GENERAL FUND-CITY COUNCIL		EXPENDITURE REPORT							
			8 Months Ending 05/31/13							
THIS MONTH			ANNUAL	OPEN PO	YTD	REMAINING	PERCENT		....PROJECTED....	
ACTUAL		OBJ/SUB	BUDGET	& CONTRACTS	ACTUAL	BALANCE	PLAN	ACTUAL	OVER/UNDER	%
	REG FEE/TUITION-WARD	6845 WARD2	1,661		1,659	2	67%	100%	827	50%
	REG FEE/TUITION-WARD	6845 WARD3	1,000			1,000	67%	0%	(1,000)	-100%
	REG FEE/TUITION-WARD	6845 WARD4	735			735	67%	0%	(735)	-100%
	REG FEE/TUITION-WARD	6845 WARD5	1,000		235	765	67%	24%	(647)	-65%
---			---	---	---	---	---	---	---	---
	REGISTRATION FEE/TU		**6,396**		**2,584**	**3,812**	**67%**	**40%**	**(2,520)**	**-39%**
	SERVICES NOT SPECIFIED	6999								
---			---	---	---	---	---	---	---	---
	OTHER SERVICES & CHA		**7,496**		**2,598**	**4,898**	**67%**	**35%**	**(3,598)**	**-48%**
---			---	---	---	---	---	---	---	---
11,426	**OTHER SERVICES & CHAR**		**122,465**		**96,416**	**26,049**	**67%**	**79%**	**22,159**	**18%**
	_____									
	IMPROVEMENT OTHER THAN									
	OTHER IMPROVEMENTS	7295								
---			---	---	---	---	---	---	---	---
	IMPROVEMENT OTHER TH									
	MACHINERY AND EQUIPMENT									
	HOUSEHOLD FURN/EQUIP.	7320								
	OFFICE FURN/EQUIP.	7325			6,000	(6,000)			9,000	
	DATA PROCESSING EQUIP.	7327	78,450	36,914	35,521	6,016	67%	45%	(25,168)	-32%
	COMMUNICATION EQUIPMEN	7355								
	OTHER EQUIPMENT	7399								
---			---	---	---	---	---	---	---	---
	MACHINERY AND EQUIPM		**78,450**	**36,914**	**41,521**	**16**	**67%**	**53%**	**(16,168)**	**-21%**
---			---	---	---	---	---	---	---	---
	CAPITAL OUTLAY		**78,450**	**36,914**	**41,521**	**16**	**67%**	**53%**	**(16,168)**	**-21%**
---			---	---	---	---	---	---	---	---
35,023	**EXPENDITURES**		**406,165**	**36,914**	**273,149**	**96,103**	**67%**	**67%**	**3,558**	**1%**

			CITY OF HATTIESBURG							
	001015 - GENERAL FUND-CITY COURT		EXPENDITURE REPORT							
			8 Months Ending 05/31/13							
THIS MONTH			ANNUAL	OPEN PO	YTD	REMAINING	PERCENT		....PROJECTED....	
ACTUAL		OBJ/SUB	BUDGET	& CONTRACTS	ACTUAL	BALANCE	PLAN	ACTUAL	OVER/UNDER	%
	_____									
	_____									
	SALARIES									
64,058	REGULAR WAGES	4000	658,647		373,558	285,089	67%	57%	(98,309)	-15%
	DISASTER RECOVERY WAGE	4010								
5,357	OVERTIME	4300	20,000		25,824	(5,824)	67%	129%	18,736	94%
	DISASTER RECOVERY OVER	4310								
---			---	---	---	---	---	---	---	---
69,415	**SALARIES**		**678,647**		**399,382**	**279,265**	**67%**	**59%**	**(79,573)**	**-12%**
	EMPLOYEE BENEFITS									
9,899	STATE RETIREMENT	4600	96,800		55,505	41,295	67%	57%	(13,542)	-14%
5,253	F.I.C.A. TAXES	4700	51,925		30,076	21,849	67%	58%	(6,811)	-13%
10,857	HOSPITALIZATION INS.	4800	125,280		48,120	77,160	67%	38%	(53,100)	-42%
	UNEMPLOYMENT BENEFITS	4900	3,000		1,425	1,575	67%	48%	(862)	-29%
	WORKMAN'S COMPENSATION	4910	1,900			1,900	67%	0%	(1,900)	-100%
---			---	---	---	---	---	---	---	---
26,009	**EMPLOYEE BENEFITS**		**278,905**		**135,126**	**143,779**	**67%**	**48%**	**(76,215)**	**-27%**
---			---	---	---	---	---	---	---	---
95,424	**PERSONAL SERVICES**		**957,552**		**534,508**	**423,044**	**67%**	**56%**	**(155,790)**	**-16%**
	_____									
	OFFICE SUPPLIES									
294	PAPER	5003	3,000		2,991	9	67%	100%	1,486	50%
	PRINTED FORMS	5005								
426	OTHER EXPENDABLE OFF.S	5010	3,000	826	2,089	86	67%	70%	133	4%
	MINOR OFFICE EQUIP/FUR	5020	700	160	480	60	67%	69%	20	3%
	MICROFILM SUPPLIES	5030								
4,417	SUBSCRIPTIONS,MAGS,MAP	5050	3,817		4,417	(600)	67%	116%	2,808	74%
	BOOKS	5070								
	COMPUTER SUPPLIES	5080	5,500	1,746	1,569	2,185	67%	29%	(3,146)	-57%
---			---	---	---	---	---	---	---	---
5,136	**OFFICE SUPPLIES**		**16,017**	**2,732**	**11,546**	**1,740**	**67%**	**72%**	**1,302**	**8%**
	OPERATING SUPPLIES									
	FOOD	5115								
	WEARING APPAREL	5355								
	MINOR EQUIPMENT	5460								
169	OTHER OPERATING MATL/S	5590	1,500		703	797	67%	47%	(445)	-30%
	OTHER OPER.MATL-JAIL G	5591	415			415	67%	0%	(415)	-100%

			CITY OF HATTIESBURG							
	001015 - GENERAL FUND-CITY COURT		EXPENDITURE REPORT							
			8 Months Ending 05/31/13							
THIS MONTH			ANNUAL	OPEN PO	YTD	REMAINING	PERCENT		....PROJECTED....	
ACTUAL		OBJ/SUB	BUDGET	& CONTRACTS	ACTUAL	BALANCE	PLAN	ACTUAL	OVER/UNDER	%
---			---	---	---	---	---	---	---	---
169	**OPERATING SUPPLIES**		**1,915**		**703**	**1,212**	**67%**	**37%**	**(860)**	**-45%**
	REPAIR & MAINTENANCE SP									
	BUILDING MATERIALS & S	5600								
---			---	---	---	---	---	---	---	---
	REPAIR & MAINTENANCE									
---			---	---	---	---	---	---	---	---
5,305	**SUPPLIES AND EXPENSES**		**17,932**	**2,732**	**12,249**	**2,952**	**67%**	**68%**	**441**	**2%**
	PROFESSIONAL SERVICES									
	CONSULTANT SERV/SURVEY	6020								
102	LEGAL	6025	15,200		1,144	14,056	67%	8%	(13,484)	-89%
	DATA PROCESSING	6035								
	MICROFILM PROCESSING	6037								
	OTHER PROF-JAIL DIV GR	6048	55,195		15,577	39,618	67%	28%	(31,829)	-58%
	OTHER PROFESSIONAL SER	6049	53,800		10,535	43,265	67%	20%	(37,997)	-71%
---			---	---	---	---	---	---	---	---
102	**PROFESSIONAL SERVICE**		**124,195**		**27,256**	**96,939**	**67%**	**22%**	**(83,311)**	**-67%**
	COMMUNICATIONS									
	TELEPHONE AND TELEGRAP	6060								
	POSTAGE	6070								
---			---	---	---	---	---	---	---	---
	COMMUNICATIONS									
	TRANSPORTATION									
	TRAVEL EXPENSE	6110	3,100			3,100	67%	0%	(3,100)	-100%
	TRVL-JAIL DIVERSN GRAN	6118	7,173			7,173	67%	0%	(7,173)	-100%
	FREIGHT	6120								
	MESSENGER/EXPRESS SERV	6130								
---			---	---	---	---	---	---	---	---
	TRANSPORTATION		**10,273**			**10,273**	**67%**	**0%**	**(10,273)**	**-100%**
	ADVERTISING									
	ADVERTISING	6150								
---			---	---	---	---	---	---	---	---
	ADVERTISING									
	PRINTING AND BINDING									
	PRINTING	6200	8,051		3,037	5,014	67%	38%	(3,495)	-43%
	BINDING	6205								

			CITY OF HATTIESBURG							
	001015 - GENERAL FUND-CITY COURT		EXPENDITURE REPORT							
			8 Months Ending 05/31/13							
THIS MONTH			ANNUAL	OPEN PO	YTD	REMAINING	PERCENT		....PROJECTED....	
ACTUAL		OBJ/SUB	BUDGET	& CONTRACTS	ACTUAL	BALANCE	PLAN	ACTUAL	OVER/UNDER	%
----------			---------	---------	---------	---------	-----	-----	--------	-----
	PRINTING AND BINDING		**8,051**		**3,037**	**5,014**	**67%**	**38%**	**(3,495)**	**-43%**
	INSURANCE									
	SURETY AND FORGERY BON	6270	250		100	150	67%	40%	(100)	-40%
----------			---------	---------	---------	---------	-----	-----	--------	-----
	INSURANCE		**250**		**100**	**150**	**67%**	**40%**	**(100)**	**-40%**
	REPR/MAINT-OUTSIDE LABO									
	BUILDING R&M	6350								
	OFFICE EQUIPMENT R&M	6365	14,700		398	14,302	67%	3%	(14,102)	-96%
----------			---------	---------	---------	---------	-----	-----	--------	-----
	REPR/MAINT-OUTSIDE L		**14,700**		**398**	**14,302**	**67%**	**3%**	**(14,102)**	**-96%**
	RENTALS									
	OFFICE EQUIPMENT RENT	6410								
	OTHER RENT	6449								
----------			---------	---------	---------	---------	-----	-----	--------	-----
	RENTALS									
	OTHER SERVICES & CHARGE									
	COURT COSTS	6710								
	REFUNDS	6835								
	POLICE FINE REFUNDS	6835 PF								
----------			---------	---------	---------	---------	-----	-----	--------	-----
	REFUNDS									
	DUES AND MEMBERSHIPS	6840	150			150	67%	0%	(150)	-100%
	REGISTRATION FEE/TUITI	6845	600			600	67%	0%	(600)	-100%
	SERVICES NOT SPECIFIED	6999								
----------			---------	---------	---------	---------	-----	-----	--------	-----
	OTHER SERVICES & CHA		**750**			**750**	**67%**	**0%**	**(750)**	**-100%**
----------			---------	---------	---------	---------	-----	-----	--------	-----
102	**OTHER SERVICES & CHAR**		**158,219**		**30,790**	**127,429**	**67%**	**19%**	**(112,033)**	**-71%**
	MACHINERY AND EQUIPMENT									
	OFFICE FURN/EQUIP.	7325								
	DATA PROCESSING EQUIP.	7327								
	OTHER EQUIPMENT	7399								
----------			---------	---------	---------	---------	-----	-----	--------	-----
	MACHINERY AND EQUIPM									
----------			---------	---------	---------	---------	-----	-----	--------	-----

			CITY OF HATTIESBURG							
	001015 - GENERAL FUND-CITY COURT		EXPENDITURE REPORT							
			8 Months Ending 05/31/13							
THIS MONTH			ANNUAL	OPEN PO	YTD	REMAINING	PERCENT		....PROJECTED....	
ACTUAL		OBJ/SUB	BUDGET	& CONTRACTS	ACTUAL	BALANCE	PLAN	ACTUAL	OVER/UNDER	%
	CAPITAL OUTLAY									
----------			---------	---------	---------	---------	-----	-----	--------	-----
100,831	**EXPENDITURES**		**1,133,703**	**2,732**	**577,547**	**553,424**	**67%**	**51%**	**(267,382)**	**-24%**

			CITY OF HATTIESBURG							
	001020 - GENERAL FUND-MAYOR/ADMIN.		EXPENDITURE REPORT							
			8 Months Ending 05/31/13							
THIS MONTH			ANNUAL	OPEN PO	YTD	REMAINING	PERCENT		....PROJECTED....	
ACTUAL		OBJ/SUB	BUDGET	& CONTRACTS	ACTUAL	BALANCE	PLAN	ACTUAL	OVER/UNDER	%
	_____									
	_____									
	SALARIES									
45,278	REGULAR WAGES	4000	399,546		270,986	128,560	67%	68%	6,933	2%
	DISASTER RECOVERY WAGE	4010								
	OVERTIME	4300								
	DISASTER RECOVERY OVER	4310								
---			---	---	---	---	---	---	---	---
45,278	**SALARIES**		**399,546**		**270,986**	**128,560**	**67%**	**68%**	**6,933**	**2%**
	EMPLOYEE BENEFITS									
6,457	STATE RETIREMENT	4600	56,990		38,643	18,347	67%	68%	974	2%
3,374	F.I.C.A. TAXES	4700	30,570		20,021	10,549	67%	65%	(538)	-2%
5,216	HOSPITALIZATION INS.	4800	41,760		26,944	14,816	67%	65%	(1,344)	-3%
	UNEMPLOYMENT BENEFITS	4900	1,000		4	996	67%	0%	(994)	-99%
	WORKMAN'S COMPENSATION	4910	3,700			3,700	67%	0%	(3,700)	-100%
---			---	---	---	---	---	---	---	---
15,047	**EMPLOYEE BENEFITS**		**134,020**		**85,612**	**48,408**	**67%**	**64%**	**(5,602)**	**-4%**
---			---	---	---	---	---	---	---	---
60,325	**PERSONAL SERVICES**		**533,566**		**356,598**	**176,968**	**67%**	**67%**	**1,331**	**0%**
	_____									
	OFFICE SUPPLIES									
	PAPER	5003	250		248	2	67%	99%	122	49%
	PRINTED FORMS	5005								
28	OTHER EXPENDABLE OFF.S	5010	1,800		453	1,347	67%	25%	(1,120)	-62%
	MINOR OFFICE EQUIP/FUR	5020	500		16	484	67%	3%	(476)	-95%
	PHOTO SUPPLIES	5040								
	SUBSCRIPTIONS,MAGS,MAP	5050	650		632	18	67%	97%	298	46%
	BOOKS	5070	800		738	62	67%	92%	307	38%
	COMPUTER SUPPLIES	5080	500			500	67%	0%	(500)	-100%
---			---	---	---	---	---	---	---	---
28	**OFFICE SUPPLIES**		**4,500**		**2,086**	**2,414**	**67%**	**46%**	**(1,370)**	**-30%**
	OPERATING SUPPLIES									
	CLEANING/JANITORIAL SP	5100								
	HOUSEHOLD SUPPLIES	5110								
488	FOOD	5115	2,250		1,489	761	67%	66%	(16)	-1%
	GAS AND OIL	5250	4,400		1,210	3,190	67%	28%	(2,584)	-59%
	LUBRICANTS	5255								

			CITY OF HATTIESBURG							
	001020 - GENERAL FUND-MAYOR/ADMIN.		EXPENDITURE REPORT							
			8 Months Ending 05/31/13							
THIS MONTH			ANNUAL	OPEN PO	YTD	REMAINING	PERCENT		....PROJECTED....	
ACTUAL		OBJ/SUB	BUDGET	& CONTRACTS	ACTUAL	BALANCE	PLAN	ACTUAL	OVER/UNDER	%
	MINOR EQUIPMENT	5460								
	OTHER OPERATING MATL/S	5590	750		30	720	67%	4%	(704)	-94%
---			---	---	---	---	---	---	---	---
488	**OPERATING SUPPLIES**		**7,400**		**2,729**	**4,671**	**67%**	**37%**	**(3,306)**	**-45%**
	REPAIR & MAINTENANCE SP									
	MTR VEHICLE REP. PTS/S	5700	750	105	4	641	67%	1%	(744)	-99%
	COMMUNICATION REPAIR P	5750								
	OTHER REPAIR/MAINT. SP	5990	250			250	67%	0%	(250)	-100%
---			---	---	---	---	---	---	---	---
	REPAIR & MAINTENANCE		**1,000**	**105**	**4**	**891**	**67%**	**0%**	**(994)**	**-99%**
---			---	---	---	---	---	---	---	---
516	**SUPPLIES AND EXPENSES**		**12,900**	**105**	**4,819**	**7,976**	**67%**	**37%**	**(5,671)**	**-44%**
	_____									
	PROFESSIONAL SERVICES									
	APPRAISAL	6017								
	CONSULTANT SERV/SURVEY	6020								
	ENTERTAINMENT	6033								
	OTHER PROFESSIONAL SER	6049	750		250	500	67%	33%	(374)	-50%
---			---	---	---	---	---	---	---	---
	PROFESSIONAL SERVICE		**750**		**250**	**500**	**67%**	**33%**	**(374)**	**-50%**
	COMMUNICATIONS									
88	TELEPHONE AND TELEGRAP	6060	3,500		2,184	1,316	67%	62%	(224)	-6%
	POSTAGE	6070								
---			---	---	---	---	---	---	---	---
88	**COMMUNICATIONS**		**3,500**		**2,184**	**1,316**	**67%**	**62%**	**(224)**	**-6%**
	TRANSPORTATION									
355	TRAVEL EXPENSE	6110	16,000		3,625	12,375	67%	23%	(10,562)	-66%
	FREIGHT	6120								
23	MESSENGER/EXPRESS SERV	6130	400		23	377	67%	6%	(365)	-91%
---			---	---	---	---	---	---	---	---
378	**TRANSPORTATION**		**16,400**		**3,648**	**12,752**	**67%**	**22%**	**(10,928)**	**-67%**
	ADVERTISING									
1,301	ADVERTISING	6150	19,400	3,298	12,988	3,114	67%	67%	82	0%
	ADVERTISING-BC HEALTHY	6151	22,002		10,858	11,144	67%	49%	(5,714)	-26%
	ADVERTISING-SPEC. EVEN	6152								
618	ADVERTISING-MAYOR'S YO	6153	7,500		6,086	1,414	67%	81%	1,629	22%
	ADVERTISING-USM-ISP	6156	21,650		21,553	97	67%	100%	10,679	49%

			CITY OF HATTIESBURG							
	001020 - GENERAL FUND-MAYOR/ADMIN.		EXPENDITURE REPORT							
			8 Months Ending 05/31/13							
THIS MONTH			ANNUAL	OPEN PO	YTD	REMAINING	PERCENT		....PROJECTED....	
ACTUAL		OBJ/SUB	BUDGET	& CONTRACTS	ACTUAL	BALANCE	PLAN	ACTUAL	OVER/UNDER	%
---			---	---	---	---	---	---	---	---
1,919	**ADVERTISING**		**70,552**	**3,298**	**51,484**	**15,770**	**67%**	**73%**	**6,674**	**9%**
	PRINTING AND BINDING									
(21)	PRINTING	6200	1,500		19	1,481	67%	1%	(1,471)	-98%
	BINDING	6205								
	BLUELINES	6210								
	FILM PROCESSING	6240								
---			---	---	---	---	---	---	---	---
(21)	**PRINTING AND BINDING**		**1,500**		**19**	**1,481**	**67%**	**1%**	**(1,471)**	**-98%**
	INSURANCE									
	PUBLIC LIAB/PROPERTY D	6255								
	AUTOMOBILE INSURANCE	6265								
	SURETY AND FORGERY BON	6270								
	OTHER INSURANCE	6299								
---			---	---	---	---	---	---	---	---
	INSURANCE									
	REPR/MAINT-OUTSIDE LABO									
	OFFICE EQUIPMENT R&M	6365	1,000			1,000	67%	0%	(1,000)	-100%
	HOUSEHOLD EQUIPMENT R&	6370								
	MINOR EQUIPMENT R&M	6382								
20	MOTOR VEHICLE EQ. R&M	6384	1,000		764	236	67%	76%	146	15%
	COMMUNICATION EQ. R&M	6390								
	OTHER REPAIRS AND MAIN	6399								
---			---	---	---	---	---	---	---	---
20	**REPR/MAINT-OUTSIDE L**		**2,000**		**764**	**1,236**	**67%**	**38%**	**(854)**	**-43%**
	RENTALS									
	OFFICE EQUIPMENT RENT	6410								
	OTHER RENT	6449								
---			---	---	---	---	---	---	---	---
	RENTALS									
	OTHER SERVICES & CHARGE									
	LATE PAYMENT CHARGE	6705								
	DUES AND MEMBERSHIPS	6840	6,000		5,199	801	67%	87%	1,798	30%
	REGISTRATION FEE/TUITI	6845	3,000		2,230	770	67%	74%	345	12%
	SERVICES NOT SPECIFIED	6999								
---			---	---	---	---	---	---	---	---
	OTHER SERVICES & CHA		**9,000**		**7,429**	**1,571**	**67%**	**83%**	**2,143**	**24%**

			CITY OF HATTIESBURG							
	001020 - GENERAL FUND-MAYOR/ADMIN.		EXPENDITURE REPORT							
			8 Months Ending 05/31/13							
THIS MONTH			ANNUAL	OPEN PO	YTD	REMAINING	PERCENT		....PROJECTED....	
ACTUAL		OBJ/SUB	BUDGET	& CONTRACTS	ACTUAL	BALANCE	PLAN	ACTUAL	OVER/UNDER	%
---			---	---	---	---	---	---	---	---
2,384	**OTHER SERVICES & CHAR**		**103,702**	**3,298**	**65,779**	**34,625**	**67%**	**63%**	**(5,033)**	**-5%**
	IMPROVEMENT OTHER THAN									
	OTHER IMPROVEMENTS	7295								
---			---	---	---	---	---	---	---	---
	IMPROVEMENT OTHER TH									
	MACHINERY AND EQUIPMENT									
	HOUSEHOLD FURN/EQUIP.	7320								
	OFFICE FURN/EQUIP.	7325								
	DATA PROCESSING EQUIP.	7327								
	COMMUNICATION EQUIPMEN	7355								
	OTHER EQUIPMENT	7399								
---			---	---	---	---	---	---	---	---
	MACHINERY AND EQUIPM									
	VEHICLES									
	AUTOMOBILES	7400								
---			---	---	---	---	---	---	---	---
	VEHICLES									
---			---	---	---	---	---	---	---	---
	CAPITAL OUTLAY									
---			---	---	---	---	---	---	---	---
63,225	**EXPENDITURES**		**650,168**	**3,403**	**427,196**	**219,569**	**67%**	**66%**	**(9,374)**	**-1%**

			CITY OF HATTIESBURG							
	001030 - GENERAL FUND-ELECTIONS		EXPENDITURE REPORT							
			8 Months Ending 05/31/13							
THIS MONTH			ANNUAL	OPEN PO	YTD	REMAINING	PERCENT		....PROJECTED....	
ACTUAL		OBJ/SUB	BUDGET	& CONTRACTS	ACTUAL	BALANCE	PLAN	ACTUAL	OVER/UNDER	%
	_____									
	_____									
	SALARIES									
	REGULAR WAGES	4000								
	OVERTIME	4300								
---			---	---	---	---	---	---	---	---
	SALARIES									
	EMPLOYEE BENEFITS									
	STATE RETIREMENT	4600								
	F.I.C.A. TAXES	4700								
	HOSPITALIZATION INS.	4800								
	UNEMPLOYMENT BENEFITS	4900								
	WORKMAN'S COMPENSATION	4910								
---			---	---	---	---	---	---	---	---
	EMPLOYEE BENEFITS									
---			---	---	---	---	---	---	---	---
	PERSONAL SERVICES									
	_____									
	OFFICE SUPPLIES									
	PAPER	5003								
	PRINTED FORMS	5005								
2,473	OTHER EXPENDABLE OFF.S	5010	3,000	50	2,713	237	67%	90%	1,069	36%
---			---	---	---	---	---	---	---	---
2,473	**OFFICE SUPPLIES**		**3,000**	**50**	**2,713**	**237**	**67%**	**90%**	**1,069**	**36%**
	OPERATING SUPPLIES									
	MINOR EQUIPMENT	5460								
	OTHER OPERATING MATL/S	5590								
---			---	---	---	---	---	---	---	---
	OPERATING SUPPLIES									
	REPAIR & MAINTENANCE SP									
	OTHER REPAIR/MAINT. SP	5990								
---			---	---	---	---	---	---	---	---
	REPAIR & MAINTENANCE									
---			---	---	---	---	---	---	---	---
2,473	**SUPPLIES AND EXPENSES**		**3,000**	**50**	**2,713**	**237**	**67%**	**90%**	**1,069**	**36%**
	_____									
	PROFESSIONAL SERVICES									

			CITY OF HATTIESBURG							
	001030 - GENERAL FUND-ELECTIONS		EXPENDITURE REPORT							
			8 Months Ending 05/31/13							
THIS MONTH			ANNUAL	OPEN PO	YTD	REMAINING	PERCENT		....PROJECTED....	
ACTUAL		OBJ/SUB	BUDGET	& CONTRACTS	ACTUAL	BALANCE	PLAN	ACTUAL	OVER/UNDER	%
	LEGAL	6025								
	DATA PROCESSING	6035								
	OTHER PROFESSIONAL SER	6049								
---			---	---	---	---	---	---	---	---
	PROFESSIONAL SERVICE									
	COMMUNICATIONS									
	POSTAGE	6070	8,345		8,345		67%	100%	4,172	50%
---			---	---	---	---	---	---	---	---
	COMMUNICATIONS		**8,345**		**8,345**		**67%**	**100%**	**4,172**	**50%**
	TRANSPORTATION									
	FREIGHT	6120								
---			---	---	---	---	---	---	---	---
	TRANSPORTATION									
	ADVERTISING									
	ADVERTISING	6150								
---			---	---	---	---	---	---	---	---
	ADVERTISING									
	PRINTING AND BINDING									
3,029	PRINTING	6200	5,400		5,356	44	67%	99%	2,634	49%
	BINDING	6205								
---			---	---	---	---	---	---	---	---
3,029	**PRINTING AND BINDING**		**5,400**		**5,356**	**44**	**67%**	**99%**	**2,634**	**49%**
	REPR/MAINT-OUTSIDE LABO									
	OFFICE EQUIPMENT R&M	6365								
	OTHER REPAIRS AND MAIN	6399	1,400			(1,400)	67%	0%	(1,400)	-100%
---			---	---	---	---	---	---	---	---
	REPR/MAINT-OUTSIDE L		**1,400**			**(1,400)**	**67%**	**0%**	**(1,400)**	**-100%**
	RENTALS									
	BUILDING RENT	6405								
	OFFICE EQUIPMENT RENT	6410								
---			---	---	---	---	---	---	---	---
	RENTALS									
	OTHER SERVICES & CHARGE									
17,237	SERVICES NOT SPECIFIED	6999	55,155		17,237	37,918	67%	31%	(29,299)	-53%
---			---	---	---	---	---	---	---	---
17,237	**OTHER SERVICES & CHA**		**55,155**		**17,237**	**37,918**	**67%**	**31%**	**(29,299)**	**-53%**
---			---	---	---	---	---	---	---	---

			CITY OF HATTIESBURG							
	001030 - GENERAL FUND-ELECTIONS		EXPENDITURE REPORT							
			8 Months Ending 05/31/13							
THIS MONTH			ANNUAL	OPEN PO	YTD	REMAINING	PERCENT		....PROJECTED....	
ACTUAL		OBJ/SUB	BUDGET	& CONTRACTS	ACTUAL	BALANCE	PLAN	ACTUAL	OVER/UNDER	%
20,266	**OTHER SERVICES & CHAR**		**67,500**		**30,938**	**36,562**	**67%**	**46%**	**(21,092)**	**-31%**
	_____									
	MACHINERY AND EQUIPMENT									
	OFFICE FURN/EQUIP.	7325								
	OTHER EQUIPMENT	7399								
----------			---------	---------	---------	---------	-----	-----	--------	-----
	MACHINERY AND EQUIPM									
----------			---------	---------	---------	---------	-----	-----	--------	-----
	CAPITAL OUTLAY									
----------			---------	---------	---------	---------	-----	-----	--------	-----
22,738	**EXPENDITURES**		**70,500**	**50**	**33,651**	**36,799**	**67%**	**48%**	**(20,023)**	**-28%**

			CITY OF HATTIESBURG							
	001040 - GENERAL FUND-MUNICIPALCLERK		EXPENDITURE REPORT							
			8 Months Ending 05/31/13							
THIS MONTH			ANNUAL	OPEN PO	YTD	REMAINING	PERCENT		....PROJECTED....	
ACTUAL		OBJ/SUB	BUDGET	& CONTRACTS	ACTUAL	BALANCE	PLAN	ACTUAL	OVER/UNDER	%
	_____									
	_____									
	SALARIES									
12,688	REGULAR WAGES	4000	109,959		76,125	33,834	67%	69%	4,228	4%
	DISASTER RECOVERY WAGE	4010								
	OVERTIME	4300								
	DISASTER RECOVERY OVER	4310								
---			---	---	---	---	---	---	---	---
12,688	**SALARIES**		**109,959**		**76,125**	**33,834**	**67%**	**69%**	**4,228**	**4%**
	EMPLOYEE BENEFITS									
1,809	STATE RETIREMENT	4600	15,685		10,855	4,830	67%	69%	597	4%
963	F.I.C.A. TAXES	4700	8,415		5,760	2,655	67%	68%	225	3%
2,608	HOSPITALIZATION INS.	4800	20,880		13,472	7,408	67%	65%	(672)	-3%
	UNEMPLOYMENT BENEFITS	4900								
	WORKMAN'S COMPENSATION	4910	412			412	67%	0%	(412)	-100%
---			---	---	---	---	---	---	---	---
5,380	**EMPLOYEE BENEFITS**		**45,392**		**30,087**	**15,305**	**67%**	**66%**	**(261)**	**-1%**
---			---	---	---	---	---	---	---	---
18,067	**PERSONAL SERVICES**		**155,351**		**106,212**	**49,139**	**67%**	**68%**	**3,967**	**3%**
	_____									
	OFFICE SUPPLIES									
	PAPER	5003								
	PRINTED FORMS	5005								
31	OTHER EXPENDABLE OFF.S	5010	2,200		562	1,638	67%	26%	(1,356)	-62%
	MINOR OFFICE EQUIP/FUR	5020	668		421	247	67%	63%	(36)	-5%
	MICROFILM SUPPLIES	5030								
40	SUBSCRIPTIONS,MAGS,MAP	5050	567		526	41	67%	93%	222	39%
	BOOKS	5070	365		267	98	67%	73%	35	10%
	COMPUTER SUPPLIES	5080								
---			---	---	---	---	---	---	---	---
71	**OFFICE SUPPLIES**		**3,800**		**1,776**	**2,024**	**67%**	**47%**	**(1,136)**	**-30%**
	OPERATING SUPPLIES									
	FOOD	5115								
	GAS AND OIL	5250								
	MINOR EQUIPMENT	5460								
	OTHER OPERATING MATL/S	5590								
---			---	---	---	---	---	---	---	---

			CITY OF HATTIESBURG							
	001040 - GENERAL FUND-MUNICIPALCLERK		EXPENDITURE REPORT							
			8 Months Ending 05/31/13							
THIS MONTH			ANNUAL	OPEN PO	YTD	REMAINING	PERCENT		....PROJECTED....	
ACTUAL		OBJ/SUB	BUDGET	& CONTRACTS	ACTUAL	BALANCE	PLAN	ACTUAL	OVER/UNDER	%
	OPERATING SUPPLIES									
71	**SUPPLIES AND EXPENSES**		**3,800**		**1,776**	**2,024**	**67%**	**47%**	**(1,136)**	**-30%**
	PROFESSIONAL SERVICES									
	CONSULTANT SERV/SURVEY	6020								
35	ABSTRACTING & RECORDIN	6023	1,800		424	1,376	67%	24%	(1,164)	-65%
	LEGAL	6025								
	DATA PROCESSING	6035								
	MICROFILM PROCESSING	6037								
	OTHER PROFESSIONAL SER	6049	350			350	67%	0%	(350)	-100%
35	**PROFESSIONAL SERVICE**		**2,150**		**424**	**1,726**	**67%**	**20%**	**(1,514)**	**-70%**
	COMMUNICATIONS									
	TELEPHONE AND TELEGRAP	6060								
	POSTAGE	6070	80			80	67%	0%	(80)	-100%
	COMMUNICATIONS		**80**			**80**	**67%**	**0%**	**(80)**	**-100%**
	TRANSPORTATION									
	TRAVEL EXPENSE	6110								
	FREIGHT	6120								
	MESSENGER/EXPRESS SERV	6130	35		30	5	67%	86%	10	29%
	TRANSPORTATION		**35**		**30**	**5**	**67%**	**86%**	**10**	**29%**
	ADVERTISING									
823	ADVERTISING	6150	20,400		10,210	10,190	67%	50%	(5,084)	-25%
	ORDINANCE EXPENSE	6160	5,350		821	4,529	67%	15%	(4,118)	-77%
823	**ADVERTISING**		**25,750**		**11,031**	**14,719**	**67%**	**43%**	**(9,203)**	**-36%**
	PRINTING AND BINDING									
	PRINTING	6200	1,600		1,535	65	67%	96%	702	44%
	BINDING	6205								
	PRINTING AND BINDING		**1,600**		**1,535**	**65**	**67%**	**96%**	**702**	**44%**
	INSURANCE									
	SURETY AND FORGERY BON	6270								

			CITY OF HATTIESBURG							
	001040 - GENERAL FUND-MUNICIPALCLERK		EXPENDITURE REPORT							
			8 Months Ending 05/31/13							
THIS MONTH			ANNUAL	OPEN PO	YTD	REMAINING	PERCENT		....PROJECTED....	
ACTUAL		OBJ/SUB	BUDGET	& CONTRACTS	ACTUAL	BALANCE	PLAN	ACTUAL	OVER/UNDER	%
	INSURANCE									
	REPR/MAINT-OUTSIDE LABO									
390	OFFICE EQUIPMENT R&M	6365	3,380		3,378	2	67%	100%	1,687	50%
	DISINFECT./EXTERMINATI	6394	700		780	(80)	67%	111%	470	67%
	OTHER REPAIRS AND MAIN	6399								
---			---	---	---	---	---	---	---	---
390	**REPR/MAINT-OUTSIDE L**		**4,080**		**4,158**	**(78)**	**67%**	**102%**	**2,157**	**53%**
	RENTALS									
	OFFICE EQUIPMENT RENT	6410								
---			---	---	---	---	---	---	---	---
	RENTALS									
	OTHER SERVICES & CHARGE									
	DUES AND MEMBERSHIPS	6840								
	REGISTRATION FEE/TUITI	6845								
	SERVICES NOT SPECIFIED	6999	1,000			1,000	67%	0%	(1,000)	-100%
---			---	---	---	---	---	---	---	---
	OTHER SERVICES & CHA		**1,000**			**1,000**	**67%**	**0%**	**(1,000)**	**-100%**
---			---	---	---	---	---	---	---	---
1,248	**OTHER SERVICES & CHAR**		**34,695**		**17,178**	**17,517**	**67%**	**50%**	**(8,927)**	**-26%**
	_____									
	MACHINERY AND EQUIPMENT									
	OFFICE FURN/EQUIP.	7325								
	DATA PROCESSING EQUIP.	7327								
	OTHER EQUIPMENT	7399								
---			---	---	---	---	---	---	---	---
	MACHINERY AND EQUIPM									
---			---	---	---	---	---	---	---	---
	CAPITAL OUTLAY									
---			---	---	---	---	---	---	---	---
19,386	**EXPENDITURES**		**193,846**		**125,166**	**68,680**	**67%**	**65%**	**(6,096)**	**-3%**

			CITY OF HATTIESBURG							
	001041 - GENERAL FUND-TAX DIVISION		EXPENDITURE REPORT							
			8 Months Ending 05/31/13							
THIS MONTH			ANNUAL	OPEN PO	YTD	REMAINING	PERCENT		....PROJECTED....	
ACTUAL		OBJ/SUB	BUDGET	& CONTRACTS	ACTUAL	BALANCE	PLAN	ACTUAL	OVER/UNDER	%
	_____									
	_____									
	SALARIES									
	REGULAR WAGES	4000								
	OVERTIME	4300								
----------			---------	---------	---------	---------	-----	-----	--------	-----
	SALARIES									
	EMPLOYEE BENEFITS									
	STATE RETIREMENT	4600								
	F.I.C.A. TAXES	4700								
	HOSPITALIZATION INS.	4800								
	UNEMPLOYMENT BENEFITS	4900								
	WORKMAN'S COMPENSATION	4910								
----------			---------	---------	---------	---------	-----	-----	--------	-----
	EMPLOYEE BENEFITS									
----------			---------	---------	---------	---------	-----	-----	--------	-----
	PERSONAL SERVICES									
	_____									
	OFFICE SUPPLIES									
	PAPER	5003								
	PRINTED FORMS	5005								
	OTHER EXPENDABLE OFF.S	5010								
	MINOR OFFICE EQUIP/FUR	5020								
	MICROFILM SUPPLIES	5030								
	SUBSCRIPTIONS,MAGS,MAP	5050								
	MAPS FOR RESALE	5060								
	BOOKS	5070								
	COMPUTER SUPPLIES	5080								
----------			---------	---------	---------	---------	-----	-----	--------	-----
	OFFICE SUPPLIES									
	OPERATING SUPPLIES									
	GAS AND OIL	5250								
	LUBRICANTS	5255								
	MINOR EQUIPMENT	5460								
	OTHER OPERATING MATL/S	5590								
----------			---------	---------	---------	---------	-----	-----	--------	-----
	OPERATING SUPPLIES									

			CITY OF HATTIESBURG							
	001041 - GENERAL FUND-TAX DIVISION		EXPENDITURE REPORT							
			8 Months Ending 05/31/13							
THIS MONTH			ANNUAL	OPEN PO	YTD	REMAINING	PERCENT		....PROJECTED....	
ACTUAL		OBJ/SUB	BUDGET	& CONTRACTS	ACTUAL	BALANCE	PLAN	ACTUAL	OVER/UNDER	%
	REPAIR & MAINTENANCE SP									
	MTR VEHICLE REP. PTS/S	5700								
	OTHER REPAIR/MAINT. SP	5990								
----------			---------	---------	---------	---------	-----	-----	--------	-----
	REPAIR & MAINTENANCE									
----------			---------	---------	---------	---------	-----	-----	--------	-----
	SUPPLIES AND EXPENSES									
	_____									
	PROFESSIONAL SERVICES									
	CONSULTANT SERV/SURVEY	6020								
	ABSTRACTING & RECORDIN	6023								
	LEGAL	6025								
	DATA PROCESSING	6035								
	MICROFILM PROCESSING	6037								
	OTHER PROFESSIONAL SER	6049								
----------			---------	---------	---------	---------	-----	-----	--------	-----
	PROFESSIONAL SERVICE									
	COMMUNICATIONS									
	TELEPHONE AND TELEGRAP	6060								
	POSTAGE	6070								
----------			---------	---------	---------	---------	-----	-----	--------	-----
	COMMUNICATIONS									
	TRANSPORTATION									
	TRAVEL EXPENSE	6110								
	FREIGHT	6120								
	MESSENGER/EXPRESS SERV	6130								
----------			---------	---------	---------	---------	-----	-----	--------	-----
	TRANSPORTATION									
	ADVERTISING									
	ADVERTISING	6150								
----------			---------	---------	---------	---------	-----	-----	--------	-----
	ADVERTISING									
	PRINTING AND BINDING									
	PRINTING	6200								
	BINDING	6205								
	BLUELINES	6210								
----------			---------	---------	---------	---------	-----	-----	--------	-----

			CITY OF HATTIESBURG							
	001041 - GENERAL FUND-TAX DIVISION		EXPENDITURE REPORT							
			8 Months Ending 05/31/13							
THIS MONTH			ANNUAL	OPEN PO	YTD	REMAINING	PERCENT		....PROJECTED....	
ACTUAL		OBJ/SUB	BUDGET	& CONTRACTS	ACTUAL	BALANCE	PLAN	ACTUAL	OVER/UNDER	%
	PRINTING AND BINDING									
	INSURANCE									
	AUTOMOBILE INSURANCE	6265								
	SURETY AND FORGERY BON	6270								
----------			---------	---------	---------	---------	-----	-----	--------	-----
	INSURANCE									
	REPR/MAINT-OUTSIDE LABO									
	BUILDING R&M	6350								
	OFFICE EQUIPMENT R&M	6365								
	MOTOR VEHICLE EQ. R&M	6384								
	COMMUNICATION EQ. R&M	6390								
	OTHER REPAIRS AND MAIN	6399								
----------			---------	---------	---------	---------	-----	-----	--------	-----
	REPR/MAINT-OUTSIDE L									
	RENTALS									
	OFFICE EQUIPMENT RENT	6410								
----------			---------	---------	---------	---------	-----	-----	--------	-----
	RENTALS									
	OTHER SERVICES & CHARGE									
	REFUNDS	6835								
	PRIVILEGE LICENSE REF	6835 PL								
----------			---------	---------	---------	---------	-----	-----	--------	-----
	REFUNDS									
	DUES AND MEMBERSHIPS	6840								
	REGISTRATION FEE/TUITI	6845								
	SERVICES NOT SPECIFIED	6999								
----------			---------	---------	---------	---------	-----	-----	--------	-----
	OTHER SERVICES & CHA									
----------			---------	---------	---------	---------	-----	-----	--------	-----
	OTHER SERVICES & CHAR									
	_____									
	MACHINERY AND EQUIPMENT									
	HOUSEHOLD FURN/EQUIP.	7320								
	OFFICE FURN/EQUIP.	7325								
	DATA PROCESSING EQUIP.	7327								
	COMMUNICATION EQUIPMEN	7355								
	OTHER EQUIPMENT	7399								

			CITY OF HATTIESBURG							
	001041 - GENERAL FUND-TAX DIVISION		EXPENDITURE REPORT							
			8 Months Ending 05/31/13							
THIS MONTH			ANNUAL	OPEN PO	YTD	REMAINING	PERCENT		....PROJECTED....	
ACTUAL		OBJ/SUB	BUDGET	& CONTRACTS	ACTUAL	BALANCE	PLAN	ACTUAL	OVER/UNDER	%
----------			---------	---------	---------	---------	-----	-----	--------	-----
	MACHINERY AND EQUIPM									
	VEHICLES									
	AUTOMOBILES	7400								
----------			---------	---------	---------	---------	-----	-----	--------	-----
	VEHICLES									
----------			---------	---------	---------	---------	-----	-----	--------	-----
	CAPITAL OUTLAY									
----------			---------	---------	---------	---------	-----	-----	--------	-----
	EXPENDITURES									

			CITY OF HATTIESBURG							
	001042 - GENERAL FUND-ACCOUNTING DIV.		EXPENDITURE REPORT							
			8 Months Ending 05/31/13							
THIS MONTH			ANNUAL	OPEN PO	YTD	REMAINING	PERCENT		....PROJECTED....	
ACTUAL		OBJ/SUB	BUDGET	& CONTRACTS	ACTUAL	BALANCE	PLAN	ACTUAL	OVER/UNDER	%
	_____									
	_____									
	SALARIES									
23,109	REGULAR WAGES	4000	201,029		134,741	66,288	67%	67%	1,082	1%
	DISASTER RECOVERY WAGE	4010								
	OVERTIME	4300			40	(40)			60	
	DISASTER RECOVERY OVER	4310								
---			---	---	---	---	---	---	---	---
23,109	**SALARIES**		**201,029**		**134,780**	**66,249**	**67%**	**67%**	**1,141**	**1%**
	EMPLOYEE BENEFITS									
3,295	STATE RETIREMENT	4600	28,672		19,220	9,452	67%	67%	158	1%
1,752	F.I.C.A. TAXES	4700	15,380		10,187	5,193	67%	66%	(99)	-1%
2,872	HOSPITALIZATION INS.	4800	26,100		16,064	10,036	67%	62%	(2,004)	-8%
	UNEMPLOYMENT BENEFITS	4900								
	WORKMAN'S COMPENSATION	4910	700			700	67%	0%	(700)	-100%
---			---	---	---	---	---	---	---	---
7,920	**EMPLOYEE BENEFITS**		**70,852**		**45,471**	**25,381**	**67%**	**64%**	**(2,645)**	**-4%**
---			---	---	---	---	---	---	---	---
31,029	**PERSONAL SERVICES**		**271,881**		**180,251**	**91,630**	**67%**	**66%**	**(1,504)**	**-1%**
	_____									
	OFFICE SUPPLIES									
	PAPER	5003	450			450	67%	0%	(450)	-100%
	PRINTED FORMS	5005	200			200	67%	0%	(200)	-100%
131	OTHER EXPENDABLE OFF.S	5010	1,650		457	1,193	67%	28%	(964)	-58%
100	MINOR OFFICE EQUIP/FUR	5020	380		100	280	67%	26%	(230)	-61%
	MICROFILM SUPPLIES	5030								
	SUBSCRIPTIONS,MAGS,MAP	5050								
	BOOKS	5070								
	COMPUTER SUPPLIES	5080	950		199	751	67%	21%	(651)	-69%
---			---	---	---	---	---	---	---	---
231	**OFFICE SUPPLIES**		**3,630**		**755**	**2,875**	**67%**	**21%**	**(2,497)**	**-69%**
	OPERATING SUPPLIES									
249	CLEANING/JANITORIAL SP	5100	800		538	262	67%	67%	7	1%
	MINOR EQUIPMENT	5460	650			650	67%	0%	(650)	-100%
	OTHER OPERATING MATL/S	5590	180		29	152	67%	16%	(136)	-76%
---			---	---	---	---	---	---	---	---
249	**OPERATING SUPPLIES**		**1,630**		**567**	**1,063**	**67%**	**35%**	**(779)**	**-48%**

			CITY OF HATTIESBURG							
	001042 - GENERAL FUND-ACCOUNTING DIV.		EXPENDITURE REPORT							
			8 Months Ending 05/31/13							
THIS MONTH			ANNUAL	OPEN PO	YTD	REMAINING	PERCENT		....PROJECTED....	
ACTUAL		OBJ/SUB	BUDGET	& CONTRACTS	ACTUAL	BALANCE	PLAN	ACTUAL	OVER/UNDER	%
	REPAIR & MAINTENANCE SP									
	BUILDING MATERIALS & S	5600								
	MINOR COMPUTER EQUIP.	5800	1,500			1,500	67%	0%	(1,500)	-100%
	OTHER REPAIR/MAINT. SP	5990	95			95	67%	0%	(95)	-100%
---			---	---	---	---	---	---	---	---
	REPAIR & MAINTENANCE		**1,595**			**1,595**	**67%**	**0%**	**(1,595)**	**-100%**
---			---	---	---	---	---	---	---	---
480	**SUPPLIES AND EXPENSES**		**6,855**		**1,322**	**5,533**	**67%**	**19%**	**(4,871)**	**-71%**
	PROFESSIONAL SERVICES									
	CONSULTANT SERV/SURVEY	6020								
	DATA PROCESSING	6035								
	MICROFILM PROCESSING	6037								
	OTHER PROFESSIONAL SER	6049								
---			---	---	---	---	---	---	---	---
	PROFESSIONAL SERVICE									
	COMMUNICATIONS									
12	TELEPHONE AND TELEGRAP	6060	190		85	105	67%	45%	(62)	-33%
	POSTAGE	6070								
---			---	---	---	---	---	---	---	---
12	**COMMUNICATIONS**		**190**		**85**	**105**	**67%**	**45%**	**(62)**	**-33%**
	TRANSPORTATION									
	TRAVEL EXPENSE	6110								
	FREIGHT	6120								
	MESSENGER/EXPRESS SERV	6130	45			45	67%	0%	(45)	-100%
---			---	---	---	---	---	---	---	---
	TRANSPORTATION		**45**			**45**	**67%**	**0%**	**(45)**	**-100%**
	ADVERTISING									
	ADVERTISING	6150								
---			---	---	---	---	---	---	---	---
	ADVERTISING									
	PRINTING AND BINDING									
	PRINTING	6200	1,140		530	610	67%	46%	(344)	-30%
	BINDING	6205								
---			---	---	---	---	---	---	---	---
	PRINTING AND BINDING		**1,140**		**530**	**610**	**67%**	**46%**	**(344)**	**-30%**
	INSURANCE									

			CITY OF HATTIESBURG							
	001042 - GENERAL FUND-ACCOUNTING DIV.		EXPENDITURE REPORT							
			8 Months Ending 05/31/13							
THIS MONTH			ANNUAL	OPEN PO	YTD	REMAINING	PERCENT		....PROJECTED....	
ACTUAL		OBJ/SUB	BUDGET	& CONTRACTS	ACTUAL	BALANCE	PLAN	ACTUAL	OVER/UNDER	%
	SURETY AND FORGERY BON	6270								
---			---	---	---	---	---	---	---	---
	INSURANCE									
	REPR/MAINT-OUTSIDE LABO									
	BUILDING R&M	6350								
	OFFICE EQUIPMENT R&M	6365								
	OTHER REPAIRS AND MAIN	6399	700			700	67%	0%	(700)	-100%
---			---	---	---	---	---	---	---	---
	REPR/MAINT-OUTSIDE L		**700**			**700**	**67%**	**0%**	**(700)**	**-100%**
	RENTALS									
	OFFICE EQUIPMENT RENT	6410								
	OTHER RENT	6449								
---			---	---	---	---	---	---	---	---
	RENTALS									
	OTHER SERVICES & CHARGE									
	DUES AND MEMBERSHIPS	6840								
	REGISTRATION FEE/TUITI	6845								
	SERVICES NOT SPECIFIED	6999								
---			---	---	---	---	---	---	---	---
	OTHER SERVICES & CHA									
---			---	---	---	---	---	---	---	---
12	**OTHER SERVICES & CHAR**		**2,075**		**615**	**1,460**	**67%**	**30%**	**(1,152)**	**-56%**
	_____									
	MACHINERY AND EQUIPMENT									
	OFFICE FURN/EQUIP.	7325								
	DATA PROCESSING EQUIP.	7327								
	OTHER EQUIPMENT	7399								
---			---	---	---	---	---	---	---	---
	MACHINERY AND EQUIPM									
---			---	---	---	---	---	---	---	---
	CAPITAL OUTLAY									
---			---	---	---	---	---	---	---	---
31,521	**EXPENDITURES**		**280,811**		**182,188**	**98,623**	**67%**	**65%**	**(7,529)**	**-3%**

			CITY OF HATTIESBURG							
	001045 - GENERAL FUND-PURCHASING DIV.		EXPENDITURE REPORT							
			8 Months Ending 05/31/13							
THIS MONTH			ANNUAL	OPEN PO	YTD	REMAINING	PERCENT		....PROJECTED....	
ACTUAL		OBJ/SUB	BUDGET	& CONTRACTS	ACTUAL	BALANCE	PLAN	ACTUAL	OVER/UNDER	%
	SALARIES									
11,190	REGULAR WAGES	4000	96,982		67,140	29,842	67%	69%	3,728	4%
	DISASTER RECOVERY WAGE	4010								
	OVERTIME	4300								
	DISASTER RECOVERY OVER	4310								
---			---	---	---	---	---	---	---	---
11,190	**SALARIES**		**96,982**		**67,140**	**29,842**	**67%**	**69%**	**3,728**	**4%**
	EMPLOYEE BENEFITS									
1,596	STATE RETIREMENT	4600	13,830		9,574	4,256	67%	69%	531	4%
833	F.I.C.A. TAXES	4700	7,420		4,948	2,472	67%	67%	2	0%
1,956	HOSPITALIZATION INS.	4800	15,660		10,104	5,556	67%	65%	(504)	-3%
	UNEMPLOYMENT BENEFITS	4900								
	WORKMAN'S COMPENSATION	4910	490			490	67%	0%	(490)	-100%
---			---	---	---	---	---	---	---	---
4,384	**EMPLOYEE BENEFITS**		**37,400**		**24,627**	**12,773**	**67%**	**66%**	**(459)**	**-1%**
---			---	---	---	---	---	---	---	---
15,574	**PERSONAL SERVICES**		**134,382**		**91,767**	**42,615**	**67%**	**68%**	**3,268**	**2%**
	OFFICE SUPPLIES									
	PAPER	5003	2,600		1,250	1,350	67%	48%	(724)	-28%
	PRINTED FORMS	5005								
	OTHER EXPENDABLE OFF.S	5010	1,500		81	1,419	67%	5%	(1,378)	-92%
	MINOR OFFICE EQUIP/FUR	5020	1,753			1,753	67%	0%	(1,753)	-100%
	SUBSCRIPTIONS,MAGS,MAP	5050								
	BOOKS	5070	400		324	76	67%	81%	86	22%
	COMPUTER SUPPLIES	5080								
---			---	---	---	---	---	---	---	---
	OFFICE SUPPLIES		**6,253**		**1,655**	**4,598**	**67%**	**26%**	**(3,770)**	**-60%**
	OPERATING SUPPLIES									
	MINOR EQUIPMENT	5460	150			150	67%	0%	(150)	-100%
	OTHER OPERATING MATL/S	5590	225		153	73	67%	68%	4	2%
---			---	---	---	---	---	---	---	---
	OPERATING SUPPLIES		**375**		**153**	**223**	**67%**	**41%**	**(145)**	**-39%**
---			---	---	---	---	---	---	---	---
	SUPPLIES AND EXPENSES		**6,628**		**1,808**	**4,820**	**67%**	**27%**	**(3,916)**	**-59%**

			CITY OF HATTIESBURG							
	001045 - GENERAL FUND-PURCHASING DIV.		EXPENDITURE REPORT							
			8 Months Ending 05/31/13							
THIS MONTH			ANNUAL	OPEN PO	YTD	REMAINING	PERCENT		....PROJECTED....	
ACTUAL		OBJ/SUB	BUDGET	& CONTRACTS	ACTUAL	BALANCE	PLAN	ACTUAL	OVER/UNDER	%
	_____									
	PROFESSIONAL SERVICES									
	CONSULTANT SERV/SURVEY	6020								
	DATA PROCESSING	6035								
	OTHER PROFESSIONAL SER	6049								
----------			---------	---------	---------	---------	-----	-----	--------	-----
	PROFESSIONAL SERVICE									
	COMMUNICATIONS									
	TELEPHONE AND TELEGRAP	6060	100			100	67%	0%	(100)	-100%
	POSTAGE	6070								
----------			---------	---------	---------	---------	-----	-----	--------	-----
	COMMUNICATIONS		**100**			**100**	**67%**	**0%**	**(100)**	**-100%**
	TRANSPORTATION									
	TRAVEL EXPENSE	6110								
	FREIGHT	6120								
	MESSENGER/EXPRESS SERV	6130								
----------			---------	---------	---------	---------	-----	-----	--------	-----
	TRANSPORTATION									
	ADVERTISING									
	ADVERTISING	6150								
----------			---------	---------	---------	---------	-----	-----	--------	-----
	ADVERTISING									
	PRINTING AND BINDING									
	PRINTING	6200								
	BINDING	6205								
----------			---------	---------	---------	---------	-----	-----	--------	-----
	PRINTING AND BINDING									
	INSURANCE									
	SURETY AND FORGERY BON	6270								
----------			---------	---------	---------	---------	-----	-----	--------	-----
	INSURANCE									
	REPR/MAINT-OUTSIDE LABO									
	OFFICE EQUIPMENT R&M	6365	800		720	80	67%	90%	280	35%
	OTHER REPAIRS AND MAIN	6399								
----------			---------	---------	---------	---------	-----	-----	--------	-----
	REPR/MAINT-OUTSIDE L		**800**		**720**	**80**	**67%**	**90%**	**280**	**35%**
	RENTALS									

			CITY OF HATTIESBURG							
	001045 - GENERAL FUND-PURCHASING DIV.		EXPENDITURE REPORT							
			8 Months Ending 05/31/13							
THIS MONTH			ANNUAL	OPEN PO	YTD	REMAINING	PERCENT		....PROJECTED....	
ACTUAL		OBJ/SUB	BUDGET	& CONTRACTS	ACTUAL	BALANCE	PLAN	ACTUAL	OVER/UNDER	%
	OFFICE EQUIPMENT RENT	6410								
----------			---------	---------	---------	---------	-----	-----	--------	-----
	RENTALS									
	OTHER SERVICES & CHARGE									
	DUES AND MEMBERSHIPS	6840								
	REGISTRATION FEE/TUITI	6845								
	SERVICES NOT SPECIFIED	6999								
----------			---------	---------	---------	---------	-----	-----	--------	-----
	OTHER SERVICES & CHA									
----------			---------	---------	---------	---------	-----	-----	--------	-----
	OTHER SERVICES & CHAR		**900**		**720**	**180**	**67%**	**80%**	**180**	**20%**
	_____									
	BUILDING/BLD IMPROVEMEN									
	BUILDING IMPROVEMENTS	7150								
	OFFICE IMPROVEMENTS	7150 23								
----------			---------	---------	---------	---------	-----	-----	--------	-----
	BUILDING IMPROVEMEN									
----------			---------	---------	---------	---------	-----	-----	--------	-----
	BUILDING/BLD IMPROVE									
	MACHINERY AND EQUIPMENT									
	OFFICE FURN/EQUIP.	7325								
	DATA PROCESSING EQUIP.	7327								
	OTHER EQUIPMENT	7399								
----------			---------	---------	---------	---------	-----	-----	--------	-----
	MACHINERY AND EQUIPM									
----------			---------	---------	---------	---------	-----	-----	--------	-----
	CAPITAL OUTLAY									
----------			---------	---------	---------	---------	-----	-----	--------	-----
15,574	**EXPENDITURES**		**141,910**		**94,295**	**47,615**	**67%**	**66%**	**(467)**	**0%**

			CITY OF HATTIESBURG							
	001060 - GENERAL FUND-CITY ATTORNEY		EXPENDITURE REPORT							
			8 Months Ending 05/31/13							
THIS MONTH			ANNUAL	OPEN PO	YTD	REMAINING	PERCENT		....PROJECTED....	
ACTUAL		OBJ/SUB	BUDGET	& CONTRACTS	ACTUAL	BALANCE	PLAN	ACTUAL	OVER/UNDER	%
	SALARIES									
8,308	REGULAR WAGES	4000	72,000		49,846	22,154	67%	69%	2,769	4%
	OVERTIME	4300								
---			---	---	---	---	---	---	---	---
8,308	**SALARIES**		**72,000**		**49,846**	**22,154**	**67%**	**69%**	**2,769**	**4%**
	EMPLOYEE BENEFITS									
1,185	STATE RETIREMENT	4600	10,270		7,108	3,162	67%	69%	392	4%
606	F.I.C.A. TAXES	4700	5,510		3,579	1,931	67%	65%	(141)	-3%
652	HOSPITALIZATION INS.	4800	5,220		3,368	1,852	67%	65%	(168)	-3%
	UNEMPLOYMENT BENEFITS	4900								
	WORKMAN'S COMPENSATION	4910	242			242	67%	0%	(242)	-100%
---			---	---	---	---	---	---	---	---
2,443	**EMPLOYEE BENEFITS**		**21,242**		**14,055**	**7,187**	**67%**	**66%**	**(159)**	**-1%**
---			---	---	---	---	---	---	---	---
10,751	**PERSONAL SERVICES**		**93,242**		**63,902**	**29,340**	**67%**	**69%**	**2,611**	**3%**
	OFFICE SUPPLIES									
	PAPER	5003								
	PRINTED FORMS	5005								
	OTHER EXPENDABLE OFF.S	5010								
	MINOR OFFICE EQUIP/FUR	5020								
	BOOKS	5070								
	OTHER OPERATING MATL/S	5590								
---			---	---	---	---	---	---	---	---
	OFFICE SUPPLIES									
---			---	---	---	---	---	---	---	---
	SUPPLIES AND EXPENSES									
	PROFESSIONAL SERVICES									
	LEGAL	6025	17,000		6,846	10,154	67%	40%	(6,730)	-40%
	OTHER PROFESSIONAL SER	6049								
---			---	---	---	---	---	---	---	---
	PROFESSIONAL SERVICE		**17,000**		**6,846**	**10,154**	**67%**	**40%**	**(6,730)**	**-40%**
	COMMUNICATIONS									
	TELEPHONE AND TELEGRAP	6060								

			CITY OF HATTIESBURG							
	001060 - GENERAL FUND-CITY ATTORNEY		EXPENDITURE REPORT							
			8 Months Ending 05/31/13							
THIS MONTH			ANNUAL	OPEN PO	YTD	REMAINING	PERCENT		....PROJECTED....	
ACTUAL		OBJ/SUB	BUDGET	& CONTRACTS	ACTUAL	BALANCE	PLAN	ACTUAL	OVER/UNDER	%
	POSTAGE	6070								
---			---	---	---	---	---	---	---	---
	COMMUNICATIONS									
	TRANSPORTATION									
	TRAVEL EXPENSE	6110	1,000		234	766	67%	23%	(648)	-65%
---			---	---	---	---	---	---	---	---
	TRANSPORTATION		**1,000**		**234**	**766**	**67%**	**23%**	**(648)**	**-65%**
	PRINTING AND BINDING									
	PRINTING	6200								
---			---	---	---	---	---	---	---	---
	PRINTING AND BINDING									
	OTHER SERVICES & CHARGE									
	COURT COSTS	6710	100			100	67%	0%	(100)	-100%
	DUES AND MEMBERSHIPS	6840	100		25	75	67%	25%	(62)	-62%
	REGISTRATION FEE/TUITI	6845	300		125	175	67%	42%	(112)	-37%
---			---	---	---	---	---	---	---	---
	OTHER SERVICES & CHA		**500**		**150**	**350**	**67%**	**30%**	**(274)**	**-55%**
---			---	---	---	---	---	---	---	---
	OTHER SERVICES & CHAR		**18,500**		**7,229**	**11,271**	**67%**	**39%**	**(7,656)**	**-41%**
	_____									
	MACHINERY AND EQUIPMENT									
---			---	---	---	---	---	---	---	---
	CAPITAL OUTLAY									
---			---	---	---	---	---	---	---	---
10,751	**EXPENDITURES**		**111,742**		**71,131**	**40,611**	**67%**	**64%**	**(5,045)**	**-5%**

			CITY OF HATTIESBURG							
	001080 - GENERAL FUND-HUMAN RESOURCES		EXPENDITURE REPORT							
			8 Months Ending 05/31/13							
THIS MONTH			ANNUAL	OPEN PO	YTD	REMAINING	PERCENT		....PROJECTED....	
ACTUAL		OBJ/SUB	BUDGET	& CONTRACTS	ACTUAL	BALANCE	PLAN	ACTUAL	OVER/UNDER	%
	_____									
	_____									
	SALARIES									
14,070	REGULAR WAGES	4000	143,309		84,422	58,887	67%	59%	(16,675)	-12%
	DISASTER RECOVERY WAGE	4010								
	OVERTIME	4300								
	DISASTER RECOVERY OVER	4310								
---			---	---	---	---	---	---	---	---
14,070	**SALARIES**		**143,309**		**84,422**	**58,887**	**67%**	**59%**	**(16,675)**	**-12%**
	EMPLOYEE BENEFITS									
2,006	STATE RETIREMENT	4600	20,435		12,038	8,397	67%	59%	(2,377)	-12%
1,046	F.I.C.A. TAXES	4700	10,965		6,214	4,751	67%	57%	(1,643)	-15%
2,220	HOSPITALIZATION INS.	4800	20,880		10,368	10,512	67%	50%	(5,328)	-26%
	UNEMPLOYMENT BENEFITS	4900								
	WORKMAN'S COMPENSATION	4910	540			540	67%	0%	(540)	-100%
---			---	---	---	---	---	---	---	---
5,272	**EMPLOYEE BENEFITS**		**52,820**		**28,620**	**24,200**	**67%**	**54%**	**(9,890)**	**-19%**
---			---	---	---	---	---	---	---	---
19,342	**PERSONAL SERVICES**		**196,129**		**113,042**	**83,087**	**67%**	**58%**	**(26,565)**	**-14%**
	_____									
	OFFICE SUPPLIES									
	PAPER	5003	4,000		1,030	2,970	67%	26%	(2,454)	-61%
	PRINTED FORMS	5005	420			420	67%	0%	(420)	-100%
(208)	OTHER EXPENDABLE OFF.S	5010	3,750	154	2,945	651	67%	79%	667	18%
	MINOR OFFICE EQUIP/FUR	5020	1,500			1,500	67%	0%	(1,500)	-100%
	SUBSCRIPTIONS,MAGS,MAP	5050	1,029		277	752	67%	27%	(613)	-60%
	BOOKS	5070	221		220	1	67%	100%	109	49%
	COMPUTER SUPPLIES	5080								
---			---	---	---	---	---	---	---	---
(208)	**OFFICE SUPPLIES**		**10,920**	**154**	**4,473**	**6,293**	**67%**	**41%**	**(4,210)**	**-39%**
	OPERATING SUPPLIES									
	MINOR EQUIPMENT	5460								
	OTHER OPERATING MATL/S	5590								
---			---	---	---	---	---	---	---	---
	OPERATING SUPPLIES									
---			---	---	---	---	---	---	---	---
(208)	**SUPPLIES AND EXPENSES**		**10,920**	**154**	**4,473**	**6,293**	**67%**	**41%**	**(4,210)**	**-39%**

			CITY OF HATTIESBURG							
	001080 - GENERAL FUND-HUMAN RESOURCES		EXPENDITURE REPORT							
			8 Months Ending 05/31/13							
THIS MONTH			ANNUAL	OPEN PO	YTD	REMAINING	PERCENT		....PROJECTED....	
ACTUAL		OBJ/SUB	BUDGET	& CONTRACTS	ACTUAL	BALANCE	PLAN	ACTUAL	OVER/UNDER	%
	PROFESSIONAL SERVICES									
	CONSULTANT SERV/SURVEY	6020								
	OTHER PROFESSIONAL SER	6049	3,200			3,200	67%	0%	(3,200)	-100%
---			---	---	---	---	---	---	---	---
	PROFESSIONAL SERVICE		**3,200**			**3,200**	**67%**	**0%**	**(3,200)**	**-100%**
	COMMUNICATIONS									
12	TELEPHONE AND TELEGRAP	6060	100		88	12	67%	88%	32	32%
	POSTAGE	6070	20			20	67%	0%	(20)	-100%
---			---	---	---	---	---	---	---	---
12	**COMMUNICATIONS**		**120**		**88**	**32**	**67%**	**73%**	**12**	**10%**
	TRANSPORTATION									
	TRAVEL EXPENSE	6110								
	FREIGHT	6120								
	MESSENGER/EXPRESS SERV	6130								
---			---	---	---	---	---	---	---	---
	TRANSPORTATION									
	ADVERTISING									
	ADVERTISING	6150								
---			---	---	---	---	---	---	---	---
	ADVERTISING									
	PRINTING AND BINDING									
	PRINTING	6200	1,000			1,000	67%	0%	(1,000)	-100%
	BINDING	6205								
---			---	---	---	---	---	---	---	---
	PRINTING AND BINDING		**1,000**			**1,000**	**67%**	**0%**	**(1,000)**	**-100%**
	INSURANCE									
	SURETY AND FORGERY BON	6270								
---			---	---	---	---	---	---	---	---
	INSURANCE									
	REPR/MAINT-OUTSIDE LABO									
	BUILDING R&M	6350								
	OFFICE EQUIPMENT R&M	6365	6,320			6,320	67%	0%	(6,320)	-100%
---			---	---	---	---	---	---	---	---
	REPR/MAINT-OUTSIDE L		**6,320**			**6,320**	**67%**	**0%**	**(6,320)**	**-100%**
	OTHER SERVICES & CHARGE									
	DUES AND MEMBERSHIPS	6840	200			200	67%	0%	(200)	-100%

			CITY OF HATTIESBURG							
	001080 - GENERAL FUND-HUMAN RESOURCES		EXPENDITURE REPORT							
			8 Months Ending 05/31/13							
THIS MONTH			ANNUAL	OPEN PO	YTD	REMAINING	PERCENT		....PROJECTED....	
ACTUAL		OBJ/SUB	BUDGET	& CONTRACTS	ACTUAL	BALANCE	PLAN	ACTUAL	OVER/UNDER	%
	REGISTRATION FEE/TUITI	6845								
	SERVICES NOT SPECIFIED	6999								
----------			---------	---------	---------	---------	-----	-----	--------	-----
	OTHER SERVICES & CHA		**200**			**200**	**67%**	**0%**	**(200)**	**-100%**
----------			---------	---------	---------	---------	-----	-----	--------	-----
12	**OTHER SERVICES & CHAR**		**10,840**		**88**	**10,752**	**67%**	**1%**	**(10,708)**	**-99%**
	_____									
	MACHINERY AND EQUIPMENT									
	OFFICE FURN/EQUIP.	7325								
	DATA PROCESSING EQUIP.	7327								
----------			---------	---------	---------	---------	-----	-----	--------	-----
	MACHINERY AND EQUIPM									
----------			---------	---------	---------	---------	-----	-----	--------	-----
	CAPITAL OUTLAY									
----------			---------	---------	---------	---------	-----	-----	--------	-----
19,147	**EXPENDITURES**		**217,889**	**154**	**117,602**	**100,133**	**67%**	**54%**	**(41,485)**	**-19%**

			CITY OF HATTIESBURG							
	001081 - GENERAL FUND-LOSS CONTROL		EXPENDITURE REPORT							
			8 Months Ending 05/31/13							
THIS MONTH			ANNUAL	OPEN PO	YTD	REMAINING	PERCENT		....PROJECTED....	
ACTUAL		OBJ/SUB	BUDGET	& CONTRACTS	ACTUAL	BALANCE	PLAN	ACTUAL	OVER/UNDER	%
	_____									
	_____									
	SALARIES									
8,895	REGULAR WAGES	4000	77,087		53,355	23,732	67%	69%	2,945	4%
	DISASTER RECOVERY WAGE	4010								
	OVERTIME	4300			14	(14)			21	
	DISASTER RECOVERY OVER	4310								
---			---	---	---	---	---	---	---	---
8,895	**SALARIES**		**77,087**		**53,368**	**23,719**	**67%**	**69%**	**2,965**	**4%**
	EMPLOYEE BENEFITS									
1,268	STATE RETIREMENT	4600	11,000		7,610	3,390	67%	69%	415	4%
658	F.I.C.A. TAXES	4700	5,900		3,890	2,010	67%	66%	(64)	-1%
1,304	HOSPITALIZATION INS.	4800	10,440		6,736	3,704	67%	65%	(336)	-3%
	UNEMPLOYMENT BENEFITS	4900								
	WORKMAN'S COMPENSATION	4910	302			302	67%	0%	(302)	-100%
---			---	---	---	---	---	---	---	---
3,230	**EMPLOYEE BENEFITS**		**27,642**		**18,236**	**9,406**	**67%**	**66%**	**(288)**	**-1%**
---			---	---	---	---	---	---	---	---
12,125	**PERSONAL SERVICES**		**104,729**		**71,605**	**33,124**	**67%**	**68%**	**2,678**	**3%**
	_____									
	OFFICE SUPPLIES									
	PAPER	5003								
	PRINTED FORMS	5005	150			150	67%	0%	(150)	-100%
(1)	OTHER EXPENDABLE OFF.S	5010	1,000		635	365	67%	64%	(47)	-5%
	MINOR OFFICE EQUIP/FUR	5020	300		22-	322	67%	7%	(266)	-89%
	PHOTO SUPPLIES	5040								
	SUBSCRIPTIONS,MAGS,MAP	5050	140		125	15	67%	89%	47	34%
	BOOKS	5070	305		299	6	67%	98%	143	47%
	COMPUTER SUPPLIES	5080								
---			---	---	---	---	---	---	---	---
(1)	**OFFICE SUPPLIES**		**1,895**		**1,037**	**858**	**67%**	**55%**	**(339)**	**-18%**
	OPERATING SUPPLIES									
	CLEANING/JANITORIAL SP	5100								
	HOUSEHOLD SUPPLIES	5110								
	MEDICAL SUPPLIES	5120	150			150	67%	0%	(150)	-100%
	GAS AND OIL	5250	1,900		1,104	796	67%	58%	(244)	-13%
	LUBRICANTS	5255								

			CITY OF HATTIESBURG							
	001081 - GENERAL FUND-LOSS CONTROL		EXPENDITURE REPORT							
			8 Months Ending 05/31/13							
THIS MONTH			ANNUAL	OPEN PO	YTD	REMAINING	PERCENT		....PROJECTED....	
ACTUAL		OBJ/SUB	BUDGET	& CONTRACTS	ACTUAL	BALANCE	PLAN	ACTUAL	OVER/UNDER	%
	WEARING APPAREL	5355	517		217	300	67%	42%	(191)	-37%
	MINOR EQUIPMENT	5460	500			500	67%	0%	(500)	-100%
	OTHER OPERATING MATL/S	5590								
---			---	---	---	---	---	---	---	---
	OPERATING SUPPLIES		**3,067**		**1,321**	**1,746**	**67%**	**43%**	**(1,085)**	**-35%**
	REPAIR & MAINTENANCE SP									
	BUILDING MATERIALS & S	5600								
	MTR VEHICLE REP. PTS/S	5700	400			400	67%	0%	(400)	-100%
	COMMUNICATION REPAIR P	5750	180			180	67%	0%	(180)	-100%
	OTHER REPAIR/MAINT. SP	5990	180			180	67%	0%	(180)	-100%
---			---	---	---	---	---	---	---	---
	REPAIR & MAINTENANCE		**760**			**760**	**67%**	**0%**	**(760)**	**-100%**
---			---	---	---	---	---	---	---	---
(1)	**SUPPLIES AND EXPENSES**		**5,722**		**2,357**	**3,365**	**67%**	**41%**	**(2,186)**	**-38%**
	_____									
	COMMUNICATIONS									
50	TELEPHONE AND TELEGRAP	6060	760		497	264	67%	65%	(14)	-2%
	POSTAGE	6070								
---			---	---	---	---	---	---	---	---
50	**COMMUNICATIONS**		**760**		**497**	**264**	**67%**	**65%**	**(14)**	**-2%**
	TRANSPORTATION									
	TRAVEL EXPENSE	6110								
	FREIGHT	6120								
	MESSENGER/EXPRESS SERV	6130								
---			---	---	---	---	---	---	---	---
	TRANSPORTATION									
	ADVERTISING									
	ADVERTISING	6150								
---			---	---	---	---	---	---	---	---
	ADVERTISING									
	PRINTING AND BINDING									
	PRINTING	6200								
	FILM PROCESSING	6240								
---			---	---	---	---	---	---	---	---
	PRINTING AND BINDING									
	INSURANCE									
	AUTOMOBILE INSURANCE	6265								

			CITY OF HATTIESBURG							
	001081 - GENERAL FUND-LOSS CONTROL		EXPENDITURE REPORT							
			8 Months Ending 05/31/13							
THIS MONTH			ANNUAL	OPEN PO	YTD	REMAINING	PERCENT		....PROJECTED....	
ACTUAL		OBJ/SUB	BUDGET	& CONTRACTS	ACTUAL	BALANCE	PLAN	ACTUAL	OVER/UNDER	%
	SURETY AND FORGERY BON	6270								
---			---	---	---	---	---	---	---	---
	INSURANCE									
	REPR/MAINT-OUTSIDE LABO									
	OFFICE EQUIPMENT R&M	6365								
	HOUSEHOLD EQUIPMENT R&	6370								
	MOTOR VEHICLE EQ. R&M	6384	300			300	67%	0%	(300)	-100%
	COMMUNICATION EQ. R&M	6390								
	CLEANING AND PAINTING	6392								
	OTHER REPAIRS AND MAIN	6399	1,885			1,885	67%	0%	(1,885)	-100%
---			---	---	---	---	---	---	---	---
	REPR/MAINT-OUTSIDE L		**2,185**			**2,185**	**67%**	**0%**	**(2,185)**	**-100%**
	RENTALS									
	OTHER RENT	6449								
---			---	---	---	---	---	---	---	---
	RENTALS									
	OTHER SERVICES & CHARGE									
	DUES AND MEMBERSHIPS	6840								
	REGISTRATION FEE/TUITI	6845								
	SERVICES NOT SPECIFIED	6999	1,900			1,900	67%	0%	(1,900)	-100%
---			---	---	---	---	---	---	---	---
	OTHER SERVICES & CHA		**1,900**			**1,900**	**67%**	**0%**	**(1,900)**	**-100%**
---			---	---	---	---	---	---	---	---
50	**OTHER SERVICES & CHAR**		**4,845**		**497**	**4,349**	**67%**	**10%**	**(4,099)**	**-85%**
	_____									
	MACHINERY AND EQUIPMENT									
	OFFICE FURN/EQUIP.	7325								
	DATA PROCESSING EQUIP.	7327								
	COMMUNICATION EQUIPMEN	7355								
	OTHER EQUIPMENT	7399								
---			---	---	---	---	---	---	---	---
	MACHINERY AND EQUIPM									
	VEHICLES									
	AUTOMOBILES	7400								
---			---	---	---	---	---	---	---	---
	VEHICLES									
---			---	---	---	---	---	---	---	---

			CITY OF HATTIESBURG							
	001081 - GENERAL FUND-LOSS CONTROL		EXPENDITURE REPORT							
			8 Months Ending 05/31/13							
THIS MONTH			ANNUAL	OPEN PO	YTD	REMAINING	PERCENT		....PROJECTED....	
ACTUAL		OBJ/SUB	BUDGET	& CONTRACTS	ACTUAL	BALANCE	PLAN	ACTUAL	OVER/UNDER	%
	CAPITAL OUTLAY									
----------			---------	---------	---------	---------	-----	-----	--------	-----
12,173	**EXPENDITURES**		**115,296**		**74,459**	**40,837**	**67%**	**65%**	**(3,607)**	**-3%**

			CITY OF HATTIESBURG							
	001090 - GENERAL FUND-URBAN DEVELOPMT		EXPENDITURE REPORT							
			8 Months Ending 05/31/13							
THIS MONTH			ANNUAL	OPEN PO	YTD	REMAINING	PERCENT		....PROJECTED....	
ACTUAL		OBJ/SUB	BUDGET	& CONTRACTS	ACTUAL	BALANCE	PLAN	ACTUAL	OVER/UNDER	%
	_____									
	_____									
	SALARIES									
36,996	REGULAR WAGES	4000	331,426		212,861	118,565	67%	64%	(12,134)	-4%
	DISASTER RECOVERY WAGE	4010			231	(231)			346	
	OVERTIME	4300			364	(364)			546	
	DISASTER RECOVERY OVER	4310								
----------			---------	---------	---------	---------	-----	-----	--------	-----
36,996	**SALARIES**		**331,426**		**213,456**	**117,970**	**67%**	**64%**	**(11,242)**	**-3%**
	EMPLOYEE BENEFITS									
5,276	STATE RETIREMENT	4600	47,260		30,439	16,821	67%	64%	(1,601)	-3%
2,812	F.I.C.A. TAXES	4700	25,360		16,165	9,195	67%	64%	(1,112)	-4%
6,008	HOSPITALIZATION INS.	4800	52,200		29,288	22,912	67%	56%	(8,268)	-16%
	UNEMPLOYMENT BENEFITS	4900								
	WORKMAN'S COMPENSATION	4910	2,870			2,870	67%	0%	(2,870)	-100%
----------			---------	---------	---------	---------	-----	-----	--------	-----
14,096	**EMPLOYEE BENEFITS**		**127,690**		**75,893**	**51,797**	**67%**	**59%**	**(13,850)**	**-11%**
----------			---------	---------	---------	---------	-----	-----	--------	-----
51,092	**PERSONAL SERVICES**		**459,116**		**289,349**	**169,767**	**67%**	**63%**	**(25,092)**	**-5%**
	_____									
	OFFICE SUPPLIES									
	PAPER	5003	700			700	67%	0%	(700)	-100%
	PRINTED FORMS	5005								
379	OTHER EXPENDABLE OFF.S	5010	4,610		2,933	1,677	67%	64%	(210)	-5%
60	N.I.P. SUPPLIES	5011	13,400		2287-	15,687	67%	17%	(9,969)	-74%
	CITIZENS CORPS GRANT S	5012								
	MIDTOWN STUDY GRANT SU	5013	1,500			1,500	67%	0%	(1,500)	-100%
	MINOR OFFICE EQUIP/FUR	5020	2,100		1,241	859	67%	59%	(238)	-11%
	PHOTO SUPPLIES	5040								
	SUBSCRIPTIONS,MAGS,MAP	5050								
	BOOKS	5070	1,214		807	407	67%	66%	(3)	0%
	COMPUTER SUPPLIES	5080	1,000		363-	1,363	67%	36%	(455)	-46%
----------			---------	---------	---------	---------	-----	-----	--------	-----
439	**OFFICE SUPPLIES**		**24,524**		**2,331**	**22,193**	**67%**	**10%**	**(21,027)**	**-86%**
	OPERATING SUPPLIES									
	FOOD	5115	600		565	35	67%	94%	247	41%
	GAS AND OIL	5250	2,000		1,105	895	67%	55%	(342)	-17%

			CITY OF HATTIESBURG							
	001090 - GENERAL FUND-URBAN DEVELOPMT		EXPENDITURE REPORT							
			8 Months Ending 05/31/13							
THIS MONTH			ANNUAL	OPEN PO	YTD	REMAINING	PERCENT		....PROJECTED....	
ACTUAL		OBJ/SUB	BUDGET	& CONTRACTS	ACTUAL	BALANCE	PLAN	ACTUAL	OVER/UNDER	%
	LUBRICANTS	5255								
	MINOR EQUIPMENT	5460	100			100	67%	0%	(100)	-100%
	OTHER OPERATING MATL/S	5590	500	99		401	67%	0%	(500)	-100%
---			---	---	---	---	---	---	---	---
	OPERATING SUPPLIES		**3,200**	**99**	**1,670**	**1,431**	**67%**	**52%**	**(694)**	**-22%**
	REPAIR & MAINTENANCE SP									
	BUILDING MATERIALS & S	5600								
	PAINT AND PAINTING SPL	5650	600			600	67%	0%	(600)	-100%
	MTR VEHICLE REP. PTS/S	5700	150		120	30	67%	80%	30	20%
	OTHER REPAIR/MAINT. SP	5990								
---			---	---	---	---	---	---	---	---
	REPAIR & MAINTENANCE		**750**		**120**	**630**	**67%**	**16%**	**(570)**	**-76%**
---			---	---	---	---	---	---	---	---
439	**SUPPLIES AND EXPENSES**		**28,474**	**99**	**4,121**	**24,254**	**67%**	**14%**	**(22,292)**	**-78%**
	PROFESSIONAL SERVICES									
	ENGINEERING	6015								
	CONSULTANT SERV/SURVEY	6020	100,000		58,357	41,643	67%	58%	(12,464)	-12%
	CONSULTANT SERV-MIDTOW	6022	49,872		1,712	48,160	67%	3%	(47,304)	-95%
	ABSTRACTING & RECORDIN	6023								
	LEGAL	6025								
	OTHER PROFESSIONAL SER	6049	6,500		40	6,460	67%	1%	(6,440)	-99%
---			---	---	---	---	---	---	---	---
	PROFESSIONAL SERVICE		**156,372**		**60,110**	**96,262**	**67%**	**38%**	**(66,206)**	**-42%**
	COMMUNICATIONS									
160	TELEPHONE AND TELEGRAP	6060	2,000		1,637	363	67%	82%	455	23%
	POSTAGE	6070	100			100	67%	0%	(100)	-100%
---			---	---	---	---	---	---	---	---
160	**COMMUNICATIONS**		**2,100**		**1,637**	**463**	**67%**	**78%**	**355**	**17%**
	TRANSPORTATION									
	TRAVEL EXPENSE	6110	6,650		4,001	2,649	67%	60%	(648)	-10%
	TRVL EXP-MIDTOWN STDY	6111	4,102			4,102	67%	0%	(4,102)	-100%
	FREIGHT	6120								
	MESSENGER/EXPRESS SERV	6130	100		16	84	67%	16%	(76)	-76%
---			---	---	---	---	---	---	---	---
	TRANSPORTATION		**10,852**		**4,017**	**6,835**	**67%**	**37%**	**(4,826)**	**-44%**
	ADVERTISING									

			CITY OF HATTIESBURG							
	001090 - GENERAL FUND-URBAN DEVELOPMT		EXPENDITURE REPORT							
			8 Months Ending 05/31/13							
THIS MONTH			ANNUAL	OPEN PO	YTD	REMAINING	PERCENT		....PROJECTED....	
ACTUAL		OBJ/SUB	BUDGET	& CONTRACTS	ACTUAL	BALANCE	PLAN	ACTUAL	OVER/UNDER	%
	ADVERTISING	6150								
---			---	---	---	---	---	---	---	---
	ADVERTISING									
	PRINTING AND BINDING									
	PRINTING	6200	8,279	500	2,372	5,407	67%	29%	(4,721)	-57%
	PRINTING-GRANT RELATED	6202								
	BLUELINES	6210								
	FILM PROCESSING	6240								
---			---	---	---	---	---	---	---	---
	PRINTING AND BINDING		**8,279**	**500**	**2,372**	**5,407**	**67%**	**29%**	**(4,721)**	**-57%**
	INSURANCE									
	AUTOMOBILE INSURANCE	6265								
	SURETY AND FORGERY BON	6270								
---			---	---	---	---	---	---	---	---
	INSURANCE									
	REPR/MAINT-OUTSIDE LABO									
	BUILDING R&M	6350								
	OFFICE EQUIPMENT R&M	6365								
	MOTOR VEHICLE EQ. R&M	6384								
	SIGN PAINTING	6396								
	OTHER REPAIRS AND MAIN	6399								
---			---	---	---	---	---	---	---	---
	REPR/MAINT-OUTSIDE L									
	RENTALS									
	OFFICE EQUIPMENT RENT	6410	5,380		2,864	2,516	67%	53%	(1,084)	-20%
	OTHER RENT	6449								
---			---	---	---	---	---	---	---	---
	RENTALS		**5,380**		**2,864**	**2,516**	**67%**	**53%**	**(1,084)**	**-20%**
	OTHER SERVICES & CHARGE									
	EXHIBITIONS & PROMOTIO	6500								
	DUES AND MEMBERSHIPS	6840	1,500		71	1,429	67%	5%	(1,393)	-93%
30	REGISTRATION FEE/TUITI	6845	2,500		1,530	970	67%	61%	(204)	-8%
	SERVICES NOT SPECIFIED	6999								
---			---	---	---	---	---	---	---	---
30	**OTHER SERVICES & CHA**		**4,000**		**1,601**	**2,399**	**67%**	**40%**	**(1,598)**	**-40%**
---			---	---	---	---	---	---	---	---
190	**OTHER SERVICES & CHAR**		**186,983**	**500**	**72,602**	**113,882**	**67%**	**39%**	**(78,079)**	**-42%**

			CITY OF HATTIESBURG							
	001090 - GENERAL FUND-URBAN DEVELOPMT		EXPENDITURE REPORT							
			8 Months Ending 05/31/13							
THIS MONTH			ANNUAL	OPEN PO	YTD	REMAINING	PERCENT		....PROJECTED....	
ACTUAL		OBJ/SUB	BUDGET	& CONTRACTS	ACTUAL	BALANCE	PLAN	ACTUAL	OVER/UNDER	%
	_____									
	MACHINERY AND EQUIPMENT									
	PHOTOGRAPHIC EQUIP.	7308								
	OFFICE FURN/EQUIP.	7325								
	DATA PROCESSING EQUIP.	7327								
----------			---------	---------	---------	---------	-----	-----	--------	-----
	MACHINERY AND EQUIPM									
	VEHICLES									
	AUTOMOBILES	7400								
	PICK UP TRUCKS	7420								
----------			---------	---------	---------	---------	-----	-----	--------	-----
	VEHICLES									
----------			---------	---------	---------	---------	-----	-----	--------	-----
	CAPITAL OUTLAY									
----------			---------	---------	---------	---------	-----	-----	--------	-----
51,722	**EXPENDITURES**		**674,573**	**599**	**366,071**	**307,902**	**67%**	**54%**	**(125,466)**	**-19%**

			CITY OF HATTIESBURG							
	001091 - GENERAL FUND-INFO TECHNOLOGY		EXPENDITURE REPORT							
			8 Months Ending 05/31/13							
THIS MONTH			ANNUAL	OPEN PO	YTD	REMAINING	PERCENT		....PROJECTED....	
ACTUAL		OBJ/SUB	BUDGET	& CONTRACTS	ACTUAL	BALANCE	PLAN	ACTUAL	OVER/UNDER	%
	_____									
	_____									
	SALARIES									
32,826	REGULAR WAGES	4000	284,494		196,958	87,536	67%	69%	10,943	4%
	DISASTER RECOVERY WAGE	4010								
	OVERTIME	4300								
	DISASTER RECOVERY OVER	4310								
---			---	---	---	---	---	---	---	---
32,826	**SALARIES**		**284,494**		**196,958**	**87,536**	**67%**	**69%**	**10,943**	**4%**
	EMPLOYEE BENEFITS									
4,681	STATE RETIREMENT	4600	40,570		28,086	12,484	67%	69%	1,559	4%
2,433	F.I.C.A. TAXES	4700	21,770		14,441	7,329	67%	66%	(108)	0%
4,828	HOSPITALIZATION INS.	4800	36,540		23,840	12,700	67%	65%	(780)	-2%
	UNEMPLOYMENT BENEFITS	4900								
	WORKMAN'S COMPENSATION	4910	980			980	67%	0%	(980)	-100%
---			---	---	---	---	---	---	---	---
11,942	**EMPLOYEE BENEFITS**		**99,860**		**66,367**	**33,493**	**67%**	**66%**	**(309)**	**0%**
---			---	---	---	---	---	---	---	---
44,768	**PERSONAL SERVICES**		**384,354**		**263,325**	**121,029**	**67%**	**69%**	**10,633**	**3%**
	_____									
	OFFICE SUPPLIES									
	PAPER	5003	600		257	343	67%	43%	(214)	-36%
	PRINTED FORMS	5005								
	OTHER EXPENDABLE OFF.S	5010	2,000		603	1,397	67%	30%	(1,095)	-55%
	MINOR OFFICE EQUIP/FUR	5020	800		332	468	67%	42%	(302)	-38%
	SUBSCRIPTIONS,MAGS,MAP	5050								
	BOOKS	5070								
58	COMPUTER SUPPLIES	5080	40,000	1,389	33,081	5,530	67%	83%	9,621	24%
	COMPUTR SUP-PURCHASE C	5081								
---			---	---	---	---	---	---	---	---
58	**OFFICE SUPPLIES**		**43,400**	**1,389**	**34,274**	**7,737**	**67%**	**79%**	**8,011**	**18%**
	OPERATING SUPPLIES									
	GAS AND OIL	5250	800		566	234	67%	71%	49	6%
	UNIFORMS, BADGES, ETC.	5350								
	MINOR EQUIPMENT	5460								
	OTHER OPERATING MATL/S	5590								
---			---	---	---	---	---	---	---	---

			CITY OF HATTIESBURG							
	001091 - GENERAL FUND-INFO TECHNOLOGY		EXPENDITURE REPORT							
			8 Months Ending 05/31/13							
THIS MONTH			ANNUAL	OPEN PO	YTD	REMAINING	PERCENT		....PROJECTED....	
ACTUAL		OBJ/SUB	BUDGET	& CONTRACTS	ACTUAL	BALANCE	PLAN	ACTUAL	OVER/UNDER	%
	OPERATING SUPPLIES		**800**		**566**	**234**	**67%**	**71%**	**49**	**6%**
	REPAIR & MAINTENANCE SP									
	BUILDING MATERIALS & S	5600								
	MTR VEHICLE REP. PTS/S	5700	750		77	673	67%	10%	(634)	-85%
	MINOR COMPUTER EQUIP.	5800	2,000		1,552	448	67%	78%	328	16%
---			---	---	---	---	---	---	---	---
	REPAIR & MAINTENANCE		**2,750**		**1,628**	**1,122**	**67%**	**59%**	**(308)**	**-11%**
---			---	---	---	---	---	---	---	---
58	**SUPPLIES AND EXPENSES**		**46,950**	**1,389**	**36,468**	**9,093**	**67%**	**78%**	**7,752**	**17%**
	PROFESSIONAL SERVICES									
2,080	DATA PROCESSING	6035	30,000		18,043	11,958	67%	60%	(2,935)	-10%
	OTHER PROFESSIONAL SER	6049	5,000	1,430	1,792	1,778	67%	36%	(2,312)	-46%
---			---	---	---	---	---	---	---	---
2,080	**PROFESSIONAL SERVICE**		**35,000**	**1,430**	**19,834**	**13,736**	**67%**	**57%**	**(5,248)**	**-15%**
	COMMUNICATIONS									
331	TELEPHONE AND TELEGRAP	6060	3,600		2,322	1,278	67%	65%	(116)	-3%
14,344	NETWORK	6068	176,500		71,761	104,739	67%	41%	(68,858)	-39%
124	NETWORK WIRELESS	6069	4,000		869	3,131	67%	22%	(2,696)	-67%
	POSTAGE	6070								
---			---	---	---	---	---	---	---	---
14,799	**COMMUNICATIONS**		**184,100**		**74,953**	**109,147**	**67%**	**41%**	**(71,670)**	**-39%**
	TRANSPORTATION									
	TRAVEL EXPENSE	6110								
	FREIGHT	6120	300			300	67%	0%	(300)	-100%
	MESSENGER/EXPRESS SERV	6130	100		27	73	67%	27%	(59)	-59%
---			---	---	---	---	---	---	---	---
	TRANSPORTATION		**400**		**27**	**373**	**67%**	**7%**	**(359)**	**-90%**
	ADVERTISING									
	ADVERTISING	6150								
---			---	---	---	---	---	---	---	---
	ADVERTISING									
	PRINTING AND BINDING									
	PRINTING	6200								
	BINDING	6205								
---			---	---	---	---	---	---	---	---
	PRINTING AND BINDING									

			CITY OF HATTIESBURG							
	001091 - GENERAL FUND-INFO TECHNOLOGY		EXPENDITURE REPORT							
			8 Months Ending 05/31/13							
THIS MONTH			ANNUAL	OPEN PO	YTD	REMAINING	PERCENT		....PROJECTED....	
ACTUAL		OBJ/SUB	BUDGET	& CONTRACTS	ACTUAL	BALANCE	PLAN	ACTUAL	OVER/UNDER	%
	INSURANCE									
	PUBLIC LIAB/PROPERTY D	6255								
---			---	---	---	---	---	---	---	---
	INSURANCE									
	REPR/MAINT-OUTSIDE LABO									
	ELECTRICAL R&M	6355								
	OFFICE EQUIPMENT R&M	6365	51,650	5,294	44,714	1,642	67%	87%	15,421	30%
	MOTOR VEHICLE EQ. R&M	6384	1,000			1,000	67%	0%	(1,000)	-100%
	TOW IN CHARGES	6398								
---			---	---	---	---	---	---	---	---
	REPR/MAINT-OUTSIDE L		**52,650**	**5,294**	**44,714**	**2,642**	**67%**	**85%**	**14,421**	**27%**
	RENTALS									
	OFFICE EQUIPMENT RENT	6410								
	OTHER RENT	6449								
---			---	---	---	---	---	---	---	---
	RENTALS									
	OTHER SERVICES & CHARGE									
	DUES AND MEMBERSHIPS	6840								
	REGISTRATION FEE/TUITI	6845								
	SERVICES NOT SPECIFIED	6999								
---			---	---	---	---	---	---	---	---
	OTHER SERVICES & CHA									
---			---	---	---	---	---	---	---	---
16,879	**OTHER SERVICES & CHAR**		**272,150**	**6,724**	**139,527**	**125,898**	**67%**	**51%**	**(62,859)**	**-23%**
	_____									
	MACHINERY AND EQUIPMENT									
	OFFICE FURN/EQUIP.	7325	1,500		1,405	95	67%	94%	607	40%
7,243	DATA PROCESSING EQUIP.	7327	152,292	13,615	101,370	37,308	67%	67%	(236)	0%
24,324	FINANCIAL SOFTWARE	7328	362,112	133,145	211,171	17,795	67%	58%	(45,355)	-13%
	DOM PREP GRANT 06HS205	7332								
	PUBLIC SAFETY SOFTWARE	7333	165,000			165,000	67%	0%	(165,000)	-100%
	COMMUNICATION EQUIPMEN	7355								
	OTHER EQUIPMENT	7399								
---			---	---	---	---	---	---	---	---
31,567	**MACHINERY AND EQUIPM**		**680,904**	**146,760**	**313,946**	**220,198**	**67%**	**46%**	**(209,984)**	**-31%**
	VEHICLES									
	AUTOMOBILES	7400								

			CITY OF HATTIESBURG							
	001091 - GENERAL FUND-INFO TECHNOLOGY		EXPENDITURE REPORT							
			8 Months Ending 05/31/13							
THIS MONTH			ANNUAL	OPEN PO	YTD	REMAINING	PERCENT		....PROJECTED....	
ACTUAL		OBJ/SUB	BUDGET	& CONTRACTS	ACTUAL	BALANCE	PLAN	ACTUAL	OVER/UNDER	%
----------			---------	---------	---------	---------	-----	-----	--------	-----
	VEHICLES									
----------			---------	---------	---------	---------	-----	-----	--------	-----
31,567	**CAPITAL OUTLAY**		**680,904**	**146,760**	**313,946**	**220,198**	**67%**	**46%**	**(209,984)**	**-31%**
----------			---------	---------	---------	---------	-----	-----	--------	-----
93,273	**EXPENDITURES**		**1,384,358**	**154,873**	**753,267**	**476,218**	**67%**	**54%**	**(254,457)**	**-18%**

			CITY OF HATTIESBURG							
	001092 - GENERAL FUND-GEN.GOVT.BLDG		EXPENDITURE REPORT							
			8 Months Ending 05/31/13							
THIS MONTH			ANNUAL	OPEN PO	YTD	REMAINING	PERCENT		....PROJECTED....	
ACTUAL		OBJ/SUB	BUDGET	& CONTRACTS	ACTUAL	BALANCE	PLAN	ACTUAL	OVER/UNDER	%
	_____									
	_____									
	SALARIES									
	REGULAR WAGES	4000								
	OVERTIME	4300								
---			---	---	---	---	---	---	---	---
	SALARIES									
	EMPLOYEE BENEFITS									
	STATE RETIREMENT	4600								
	F.I.C.A. TAXES	4700								
	HOSPITALIZATION INS.	4800								
	UNEMPLOYMENT BENEFITS	4900								
	WORKMAN'S COMPENSATION	4910								
---			---	---	---	---	---	---	---	---
	EMPLOYEE BENEFITS									
---			---	---	---	---	---	---	---	---
	PERSONAL SERVICES									
	_____									
	OFFICE SUPPLIES									
	PAPER	5003								
	PRINTED FORMS	5005								
	OTHER EXPENDABLE OFF.S	5010	238		60	178	67%	25%	(148)	-62%
---			---	---	---	---	---	---	---	---
	OFFICE SUPPLIES		**238**		**60**	**178**	**67%**	**25%**	**(148)**	**-62%**
	OPERATING SUPPLIES									
	CLEANING/JANITORIAL SP	5100	3,000		1,442	1,558	67%	48%	(836)	-28%
	HOUSEHOLD SUPPLIES	5110								
	FOOD	5115								
	MEDICAL SUPPLIES	5120								
	CHEMICALS	5130	2,280		1,138	1,143	67%	50%	(572)	-25%
	DIESEL FUEL	5257								
	HORT./LANDSCAPING SPLY	5440	1,500		488	1,013	67%	33%	(768)	-51%
	HAND TOOLS	5450	47			47	67%	0%	(47)	-100%
	MINOR EQUIPMENT	5460	2,350		77	2,273	67%	3%	(2,234)	-95%
	OTHER OPERATING MATL/S	5590	8,500		1,579	6,921	67%	19%	(6,131)	-72%
---			---	---	---	---	---	---	---	---
	OPERATING SUPPLIES		**17,677**		**4,722**	**12,955**	**67%**	**27%**	**(10,593)**	**-60%**

			CITY OF HATTIESBURG							
	001092 - GENERAL FUND-GEN.GOVT.BLDG		EXPENDITURE REPORT							
			8 Months Ending 05/31/13							
THIS MONTH			ANNUAL	OPEN PO	YTD	REMAINING	PERCENT		....PROJECTED....	
ACTUAL		OBJ/SUB	BUDGET	& CONTRACTS	ACTUAL	BALANCE	PLAN	ACTUAL	OVER/UNDER	%
	REPAIR & MAINTENANCE SP									
	BUILDING MATERIALS & S	5600	1,900		1,841	59	67%	97%	861	45%
284	ELECTRICAL SUPPLIES	5605	3,800		439	3,361	67%	12%	(3,141)	-83%
689	PLUMBING SUPPLIES	5610	1,425		1,115	310	67%	78%	247	17%
	PAINT AND PAINTING SPL	5650	1,900		168	1,732	67%	9%	(1,648)	-87%
	OTHER REPAIR/MAINT. SP	5990	95			95	67%	0%	(95)	-100%
---			---	---	---	---	---	---	---	---
973	**REPAIR & MAINTENANCE**		**9,120**		**3,563**	**5,557**	**67%**	**39%**	**(3,775)**	**-41%**
---			---	---	---	---	---	---	---	---
973	**SUPPLIES AND EXPENSES**		**27,035**		**8,345**	**18,690**	**67%**	**31%**	**(14,517)**	**-54%**
	PROFESSIONAL SERVICES									
	BUILDING SECURITY	6021	4,000			4,000	67%	0%	(4,000)	-100%
1,925	OTHER PROFESSIONAL SER	6049	32,300		17,370	14,930	67%	54%	(6,244)	-19%
---			---	---	---	---	---	---	---	---
1,925	**PROFESSIONAL SERVICE**		**36,300**		**17,370**	**18,930**	**67%**	**48%**	**(10,244)**	**-28%**
	COMMUNICATIONS									
	TELEPHONE AND TELEGRAP	6060								
	TELEPHONE-EATON SCHOOL	6060 GRANT								
---			---	---	---	---	---	---	---	---
	COMMUNICATIONS									
	TRANSPORTATION									
	FREIGHT	6120								
	MESSENGER/EXPRESS SERV	6130								
---			---	---	---	---	---	---	---	---
	TRANSPORTATION									
	INSURANCE									
	PUBLIC LIAB/PROPERTY D	6255								
	BOILER MACHINERY	6260								
---			---	---	---	---	---	---	---	---
	INSURANCE									
	UTILITIES									
168	GAS	6300	5,000		1,470	3,530	67%	29%	(2,794)	-56%
	GAS-TRAIN DEPOT	6300 DEPOT								
	GAS-EATON SCHOOL	6300 GRANT								
4,328	ELECTRICITY	6305	50,000		26,478	23,522	67%	53%	(10,282)	-21%
	ELECTRICITY-TRAIN DEPO	6305 DEPOT								

			CITY OF HATTIESBURG							
	001092 - GENERAL FUND-GEN.GOVT.BLDG		EXPENDITURE REPORT							
			8 Months Ending 05/31/13							
THIS MONTH			ANNUAL	OPEN PO	YTD	REMAINING	PERCENT		....PROJECTED....	
ACTUAL		OBJ/SUB	BUDGET	& CONTRACTS	ACTUAL	BALANCE	PLAN	ACTUAL	OVER/UNDER	%
	ELECTRICITY-EATON SCHO	6305 GRANT								
4,495	**UTILITIES**		**55,000**		**27,948**	**27,052**	**67%**	**51%**	**(13,078)**	**-24%**
	REPR/MAINT-OUTSIDE LABO									
429	BUILDING R&M	6350	10,363		1,829	8,534	67%	18%	(7,619)	-74%
	ELECTRICAL R&M	6355	1,520		30	1,490	67%	2%	(1,474)	-97%
	PLUMBING EQUIPMENT R&M	6357	475			475	67%	0%	(475)	-100%
	HOUSEHOLD EQUIPMENT R&	6370	1,600		895	705	67%	56%	(257)	-16%
	FIXED EQUIPMENT R&M	6380	15,900	4,602	4,374	6,924	67%	28%	(9,338)	-59%
	MINOR EQUIPMENT R&M	6382								
	CLEANING AND PAINTING	6392	3,705			3,705	67%	0%	(3,705)	-100%
	EXTERMINATION-DEPOT	6393								
75	DISINFECT./EXTERMINATI	6394	800		398	403	67%	50%	(202)	-25%
	OTHER REPAIRS AND MAIN	6399	570		250	320	67%	44%	(194)	-34%
504	**REPR/MAINT-OUTSIDE L**		**34,933**	**4,602**	**7,775**	**22,556**	**67%**	**22%**	**(23,270)**	**-67%**
	RENTALS									
	MOP-MAT-RAG RENT	6435								
	OTHER RENT	6449								
	RENTALS									
	OTHER SERVICES & CHARGE									
	CUSTODIAL SERVICE	6870								
	OTHER SERVICES & CHA									
6,924	**OTHER SERVICES & CHAR**		**126,233**	**4,602**	**53,094**	**68,537**	**67%**	**42%**	**(46,591)**	**-37%**
	BUILDING/BLD IMPROVEMEN									
	BUILDINGS	7100								
	FIRST BAPTIST CHURCH	7100 13								
	BUILDINGS									
	BUILDING/BLD IMPROVE									
	IMPROVEMENT OTHER THAN									
	LANDSCAPING	7250								

			CITY OF HATTIESBURG							
	001092 - GENERAL FUND-GEN.GOVT.BLDG		EXPENDITURE REPORT							
			8 Months Ending 05/31/13							
THIS MONTH			ANNUAL	OPEN PO	YTD	REMAINING	PERCENT		....PROJECTED....	
ACTUAL		OBJ/SUB	BUDGET	& CONTRACTS	ACTUAL	BALANCE	PLAN	ACTUAL	OVER/UNDER	%
	OTHER IMPROVEMENTS	7295								
----------			---------	---------	---------	---------	-----	-----	--------	-----
	IMPROVEMENT OTHER TH									
	MACHINERY AND EQUIPMENT									
	HOUSEHOLD FURN/EQUIP.	7320								
	OTHER EQUIPMENT	7399								
----------			---------	---------	---------	---------	-----	-----	--------	-----
	MACHINERY AND EQUIPM									
----------			---------	---------	---------	---------	-----	-----	--------	-----
	CAPITAL OUTLAY									
----------			---------	---------	---------	---------	-----	-----	--------	-----
7,897	**EXPENDITURES**		**153,268**	**4,602**	**61,439**	**87,227**	**67%**	**40%**	**(61,109)**	**-40%**

			CITY OF HATTIESBURG							
	001093 - GENERAL FD-INTERMODALFAC O&M		EXPENDITURE REPORT							
			8 Months Ending 05/31/13							
THIS MONTH			ANNUAL	OPEN PO	YTD	REMAINING	PERCENT		....PROJECTED....	
ACTUAL		OBJ/SUB	BUDGET	& CONTRACTS	ACTUAL	BALANCE	PLAN	ACTUAL	OVER/UNDER	%
	_____									
	_____									
	SALARIES									
	REGULAR WAGES	4000								
	OVERTIME	4300								
---			---	---	---	---	---	---	---	---
	SALARIES									
	EMPLOYEE BENEFITS									
	STATE RETIREMENT	4600								
	F.I.C.A. TAXES	4700								
	HOSPITALIZATION INS.	4800								
	UNEMPLOYMENT BENEFITS	4900								
	WORKMAN'S COMPENSATION	4910								
---			---	---	---	---	---	---	---	---
	EMPLOYEE BENEFITS									
---			---	---	---	---	---	---	---	---
	PERSONAL SERVICES									
	_____									
	OFFICE SUPPLIES									
	PAPER	5003								
	PRINTED FORMS	5005								
	OTHER EXPENDABLE OFF.S	5010								
	MINOR OFFICE EQUIP/FUR	5020								
	SUBSCRIPTIONS,MAGS,MAP	5050								
	BOOKS	5070								
	COMPUTER SUPPLIES	5080								
---			---	---	---	---	---	---	---	---
	OFFICE SUPPLIES									
	OPERATING SUPPLIES									
	CLEANING/JANITORIAL SP	5100	2,000		1,127	873	67%	56%	(309)	-15%
	GAS AND OIL	5250								
	LUBRICANTS	5255								
	HORT./LANDSCAPING SPLY	5440	1,000		500	500	67%	50%	(250)	-25%
1,075	MINOR EQUIPMENT	5460	2,500	74	2,090	336	67%	84%	635	25%
200	OTHER OPERATING MATL/S	5590	1,000		496	504	67%	50%	(256)	-26%
---			---	---	---	---	---	---	---	---
1,275	**OPERATING SUPPLIES**		**6,500**	**74**	**4,213**	**2,213**	**67%**	**65%**	**(180)**	**-3%**

			CITY OF HATTIESBURG							
	001093 - GENERAL FD-INTERMODALFAC O&M		EXPENDITURE REPORT							
			8 Months Ending 05/31/13							
THIS MONTH			ANNUAL	OPEN PO	YTD	REMAINING	PERCENT		....PROJECTED....	
ACTUAL		OBJ/SUB	BUDGET	& CONTRACTS	ACTUAL	BALANCE	PLAN	ACTUAL	OVER/UNDER	%
	REPAIR & MAINTENANCE SP									
36	BUILDING MATERIALS & S	5600	500		36	464	67%	7%	(446)	-89%
	ELECTRICAL SUPPLIES	5605	3,500		1,319	2,181	67%	38%	(1,521)	-43%
	PLUMBING SUPPLIES	5610	1,500		20	1,480	67%	1%	(1,470)	-98%
	PAINT AND PAINTING SPL	5650								
	MTR VEHICLE REP. PTS/S	5700								
	AGRICLTRL REPAIR PTS/S	5755								
	OTHER REPAIR/MAINT. SP	5990	1,500		556	944	67%	37%	(666)	-44%
---			---	---	---	---	---	---	---	---
36	**REPAIR & MAINTENANCE**		**7,000**		**1,931**	**5,069**	**67%**	**28%**	**(4,103)**	**-59%**
---			---	---	---	---	---	---	---	---
1,311	**SUPPLIES AND EXPENSES**		**13,500**	**74**	**6,144**	**7,282**	**67%**	**46%**	**(4,284)**	**-32%**
	_____									
	PROFESSIONAL SERVICES									
	BUILDING SECURITY	6021								
	OTHER PROFESSIONAL SER	6049								
---			---	---	---	---	---	---	---	---
	PROFESSIONAL SERVICE									
	COMMUNICATIONS									
	TELEPHONE AND TELEGRAP	6060								
	POSTAGE	6070								
---			---	---	---	---	---	---	---	---
	COMMUNICATIONS									
	TRANSPORTATION									
	TRAVEL EXPENSE	6110								
	FREIGHT	6120								
	MESSENGER/EXPRESS SERV	6130								
---			---	---	---	---	---	---	---	---
	TRANSPORTATION									
	ADVERTISING									
	ADVERTISING	6150								
---			---	---	---	---	---	---	---	---
	ADVERTISING									
	PRINTING AND BINDING									
	PRINTING	6200								
---			---	---	---	---	---	---	---	---
	PRINTING AND BINDING									

			CITY OF HATTIESBURG							
	001093 - GENERAL FD-INTERMODALFAC O&M		EXPENDITURE REPORT							
			8 Months Ending 05/31/13							
THIS MONTH			ANNUAL	OPEN PO	YTD	REMAINING	PERCENT		....PROJECTED....	
ACTUAL		OBJ/SUB	BUDGET	& CONTRACTS	ACTUAL	BALANCE	PLAN	ACTUAL	OVER/UNDER	%
	INSURANCE									
	AUTOMOBILE INSURANCE	6265								
	SURETY AND FORGERY BON	6270								
---			---	---	---	---	---	---	---	---
	INSURANCE									
	UTILITIES									
	GAS	6300								
2,967	ELECTRICITY	6305	42,000		22,863	19,137	67%	54%	(7,705)	-18%
---			---	---	---	---	---	---	---	---
2,967	**UTILITIES**		**42,000**		**22,863**	**19,137**	**67%**	**54%**	**(7,705)**	**-18%**
	REPR/MAINT-OUTSIDE LABO									
2,220	BUILDING R&M	6350	68,000	1,250	3,520	63,230	67%	5%	(62,720)	-92%
	ELECTRICAL R&M	6355	2,140			2,140	67%	0%	(2,140)	-100%
	PLUMBING EQUIPMENT R&M	6357	2,000			2,000	67%	0%	(2,000)	-100%
	OFFICE EQUIPMENT R&M	6365	1,500			1,500	67%	0%	(1,500)	-100%
	MOTOR VEHICLE EQ. R&M	6384								
45	DISINFECT./EXTERMINATI	6394	2,700		806	1,894	67%	30%	(1,490)	-55%
	SIGN PAINTING	6396								
	OTHER REPAIRS AND MAIN	6399	6,000		3,674	2,326	67%	61%	(488)	-8%
---			---	---	---	---	---	---	---	---
2,265	**REPR/MAINT-OUTSIDE L**		**82,340**	**1,250**	**8,001**	**73,089**	**67%**	**10%**	**(70,338)**	**-85%**
	RENTALS									
	UNIFORM RENT	6430								
	OTHER RENT	6449								
---			---	---	---	---	---	---	---	---
	RENTALS									
	OTHER SERVICES & CHARGE									
	EXHIBITIONS & PROMOTIO	6500								
	DUES AND MEMBERSHIPS	6840								
	REGISTRATION FEE/TUITI	6845								
	CUSTODIAL SERVICE	6870								
	SERVICES NOT SPECIFIED	6999								
---			---	---	---	---	---	---	---	---
	OTHER SERVICES & CHA									
---			---	---	---	---	---	---	---	---
5,232	**OTHER SERVICES & CHAR**		**124,340**	**1,250**	**30,864**	**92,226**	**67%**	**25%**	**(78,044)**	**-63%**
	_____									

			CITY OF HATTIESBURG							
	001093 - GENERAL FD-INTERMODALFAC O&M		EXPENDITURE REPORT							
			8 Months Ending 05/31/13							
THIS MONTH			ANNUAL	OPEN PO	YTD	REMAINING	PERCENT		....PROJECTED....	
ACTUAL		OBJ/SUB	BUDGET	& CONTRACTS	ACTUAL	BALANCE	PLAN	ACTUAL	OVER/UNDER	%
	MACHINERY AND EQUIPMENT									
	OFFICE FURN/EQUIP.	7325								
	DATA PROCESSING EQUIP.	7327								
----------			---------	---------	---------	---------	-----	-----	--------	-----
	MACHINERY AND EQUIPM									
----------			---------	---------	---------	---------	-----	-----	--------	-----
	CAPITAL OUTLAY									
----------			---------	---------	---------	---------	-----	-----	--------	-----
6,544	**EXPENDITURES**		**137,840**	**1,324**	**37,008**	**99,508**	**67%**	**27%**	**(82,328)**	**-60%**

			CITY OF HATTIESBURG							
	001094 - GENERAL FUND-METRPLTNPLANG.		EXPENDITURE REPORT							
			8 Months Ending 05/31/13							
THIS MONTH			ANNUAL	OPEN PO	YTD	REMAINING	PERCENT		....PROJECTED....	
ACTUAL		OBJ/SUB	BUDGET	& CONTRACTS	ACTUAL	BALANCE	PLAN	ACTUAL	OVER/UNDER	%
	_____									
	_____									
	SALARIES									
19,377	REGULAR WAGES	4000	154,196		106,237	47,959	67%	69%	5,159	3%
	DISASTER RECOVERY WAGE	4010								
	OVERTIME	4300			55	(55)			82	
	DISASTER RECOVERY OVER	4310								
---			---	---	---	---	---	---	---	---
19,377	**SALARIES**		**154,196**		**106,292**	**47,904**	**67%**	**69%**	**5,242**	**3%**
	EMPLOYEE BENEFITS									
2,694	STATE RETIREMENT	4600	22,000		14,585	7,415	67%	66%	(122)	-1%
1,465	F.I.C.A. TAXES	4700	11,800		7,991	3,809	67%	68%	186	2%
2,608	HOSPITALIZATION INS.	4800	20,880		13,472	7,408	67%	65%	(672)	-3%
	UNEMPLOYMENT BENEFITS	4900								
	WORKMAN'S COMPENSATION	4910	535			535	67%	0%	(535)	-100%
---			---	---	---	---	---	---	---	---
6,767	**EMPLOYEE BENEFITS**		**55,215**		**36,048**	**19,167**	**67%**	**65%**	**(1,143)**	**-2%**
---			---	---	---	---	---	---	---	---
26,144	**PERSONAL SERVICES**		**209,411**		**142,340**	**67,071**	**67%**	**68%**	**4,099**	**2%**
	_____									
	OFFICE SUPPLIES									
	PAPER	5003	1,500			1,500	67%	0%	(1,500)	-100%
	PRINTED FORMS	5005								
	OTHER EXPENDABLE OFF.S	5010	2,000		1,538	462	67%	77%	307	15%
240	MINOR OFFICE EQUIP/FUR	5020	300		240	60	67%	80%	60	20%
	PHOTO SUPPLIES	5040	200			200	67%	0%	(200)	-100%
	SUBSCRIPTIONS,MAGS,MAP	5050	250			250	67%	0%	(250)	-100%
	BOOKS	5070								
	COMPUTER SUPPLIES	5080	5,000		343	4,657	67%	7%	(4,485)	-90%
---			---	---	---	---	---	---	---	---
240	**OFFICE SUPPLIES**		**9,250**		**2,121**	**7,129**	**67%**	**23%**	**(6,068)**	**-66%**
	OPERATING SUPPLIES									
561	FOOD	5115	1,500		1,089	411	67%	73%	133	9%
	GAS AND OIL	5250	4,043		75	3,968	67%	2%	(3,930)	-97%
405	MINOR EQUIPMENT	5460	1,000		405	595	67%	41%	(392)	-39%
---			---	---	---	---	---	---	---	---
966	**OPERATING SUPPLIES**		**6,543**		**1,569**	**4,974**	**67%**	**24%**	**(4,189)**	**-64%**

			CITY OF HATTIESBURG							
	001094 - GENERAL FUND-METRPLTNPLANG.		EXPENDITURE REPORT							
			8 Months Ending 05/31/13							
THIS MONTH			ANNUAL	OPEN PO	YTD	REMAINING	PERCENT		....PROJECTED....	
ACTUAL		OBJ/SUB	BUDGET	& CONTRACTS	ACTUAL	BALANCE	PLAN	ACTUAL	OVER/UNDER	%
---			---	---	---	---	---	---	---	---
1,206	**SUPPLIES AND EXPENSES**		**15,793**		**3,690**	**12,103**	**67%**	**23%**	**(10,257)**	**-65%**
	PROFESSIONAL SERVICES									
	ENGINEERING	6015								
	CONSULTANT SERV/SURVEY	6020	63,000		42,641	20,359	67%	68%	961	2%
	ABSTRACTING & RECORDIN	6023								
	LEGAL	6025								
	OTHER PROFESSIONAL SER	6049	15,000		4,250	10,750	67%	28%	(8,624)	-57%
---			---	---	---	---	---	---	---	---
	PROFESSIONAL SERVICE		**78,000**		**46,891**	**31,109**	**67%**	**60%**	**(7,663)**	**-10%**
	COMMUNICATIONS									
	TELEPHONE AND TELEGRAP	6060								
	POSTAGE	6070	150			150	67%	0%	(150)	-100%
---			---	---	---	---	---	---	---	---
	COMMUNICATIONS		**150**			**150**	**67%**	**0%**	**(150)**	**-100%**
	TRANSPORTATION									
2,786	TRAVEL EXPENSE	6110	10,000		3,984	6,016	67%	40%	(4,024)	-40%
	FREIGHT	6120								
	MESSENGER/EXPRESS SERV	6130	400			400	67%	0%	(400)	-100%
---			---	---	---	---	---	---	---	---
2,786	**TRANSPORTATION**		**10,400**		**3,984**	**6,416**	**67%**	**38%**	**(4,424)**	**-43%**
	ADVERTISING									
	ADVERTISING	6150	1,000		57	943	67%	6%	(914)	-91%
---			---	---	---	---	---	---	---	---
	ADVERTISING		**1,000**		**57**	**943**	**67%**	**6%**	**(914)**	**-91%**
	PRINTING AND BINDING									
	PRINTING	6200	1,500			1,500	67%	0%	(1,500)	-100%
	BLUELINES	6210								
	FILM PROCESSING	6240								
---			---	---	---	---	---	---	---	---
	PRINTING AND BINDING		**1,500**			**1,500**	**67%**	**0%**	**(1,500)**	**-100%**
	REPR/MAINT-OUTSIDE LABO									
	OFFICE EQUIPMENT R&M	6365	5,792		807	4,985	67%	14%	(4,581)	-79%
---			---	---	---	---	---	---	---	---
	REPR/MAINT-OUTSIDE L		**5,792**		**807**	**4,985**	**67%**	**14%**	**(4,581)**	**-79%**
	OTHER SERVICES & CHARGE									

			CITY OF HATTIESBURG							
	001094 - GENERAL FUND-METRPLTNPLANG.		EXPENDITURE REPORT							
			8 Months Ending 05/31/13							
THIS MONTH			ANNUAL	OPEN PO	YTD	REMAINING	PERCENT		....PROJECTED....	
ACTUAL		OBJ/SUB	BUDGET	& CONTRACTS	ACTUAL	BALANCE	PLAN	ACTUAL	OVER/UNDER	%
	DUES AND MEMBERSHIPS	6840	1,208		977	231	67%	81%	257	21%
	REGISTRATION FEE/TUITI	6845	2,000			2,000	67%	0%	(2,000)	-100%
	SERVICES NOT SPECIFIED	6999								
---			---	---	---	---	---	---	---	---
	OTHER SERVICES & CHA		**3,208**		**977**	**2,231**	**67%**	**30%**	**(1,742)**	**-54%**
---			---	---	---	---	---	---	---	---
2,786	**OTHER SERVICES & CHAR**		**100,050**		**52,716**	**47,334**	**67%**	**53%**	**(20,976)**	**-21%**
	MACHINERY AND EQUIPMENT									
	OFFICE FURN/EQUIP.	7325								
	DATA PROCESSING EQUIP.	7327	500			500	67%	0%	(500)	-100%
---			---	---	---	---	---	---	---	---
	MACHINERY AND EQUIPM		**500**			**500**	**67%**	**0%**	**(500)**	**-100%**
	VEHICLES									
	AUTOMOBILES	7400								
---			---	---	---	---	---	---	---	---
	VEHICLES									
---			---	---	---	---	---	---	---	---
	CAPITAL OUTLAY		**500**			**500**	**67%**	**0%**	**(500)**	**-100%**
---			---	---	---	---	---	---	---	---
30,136	**EXPENDITURES**		**325,754**		**198,746**	**127,008**	**67%**	**61%**	**(27,634)**	**-8%**

			CITY OF HATTIESBURG							
	001095 - GENERAL FUND-G/G INS.OTH SER		EXPENDITURE REPORT							
			8 Months Ending 05/31/13							
THIS MONTH			ANNUAL	OPEN PO	YTD	REMAINING	PERCENT		....PROJECTED....	
ACTUAL		OBJ/SUB	BUDGET	& CONTRACTS	ACTUAL	BALANCE	PLAN	ACTUAL	OVER/UNDER	%
	_____									
	_____									
	SALARIES									
	REGULAR WAGES	4000								
275	OVERTIME	4300	2,500		1,293	1,207	67%	52%	(560)	-22%
---			---	---	---	---	---	---	---	---
275	**SALARIES**		**2,500**		**1,293**	**1,207**	**67%**	**52%**	**(560)**	**-22%**
	EMPLOYEE BENEFITS									
39	STATE RETIREMENT	4600	360		168	192	67%	47%	(108)	-30%
21	F.I.C.A. TAXES	4700	191		90	101	67%	47%	(55)	-29%
	HOSPITALIZATION INS.	4800	120		29	91	67%	24%	(76)	-63%
	UNEMPLOYMENT BENEFITS	4900								
	WORKMAN'S COMPENSATION	4910								
---			---	---	---	---	---	---	---	---
60	**EMPLOYEE BENEFITS**		**671**		**287**	**384**	**67%**	**43%**	**(240)**	**-36%**
---			---	---	---	---	---	---	---	---
335	**PERSONAL SERVICES**		**3,171**		**1,580**	**1,591**	**67%**	**50%**	**(801)**	**-25%**
	_____									
	OFFICE SUPPLIES									
	PAPER	5003	1,000			1,000	67%	0%	(1,000)	-100%
	PRINTED FORMS	5005								
---			---	---	---	---	---	---	---	---
	OFFICE SUPPLIES		**1,000**			**1,000**	**67%**	**0%**	**(1,000)**	**-100%**
	OPERATING SUPPLIES									
	FOOD	5115								
	DIESEL FUEL	5257								
	WEARING APPAREL	5355								
112	OTHER OPERATING MATL/S	5590	200		112	88	67%	56%	(32)	-16%
	UNALLOC. PETROLEUM PRO	5599								
---			---	---	---	---	---	---	---	---
112	**OPERATING SUPPLIES**		**200**		**112**	**88**	**67%**	**56%**	**(32)**	**-16%**
	REPAIR & MAINTENANCE SP									
	OTHER REPAIR/MAINT. SP	5990								
---			---	---	---	---	---	---	---	---
	REPAIR & MAINTENANCE									
---			---	---	---	---	---	---	---	---
112	**SUPPLIES AND EXPENSES**		**1,200**		**112**	**1,088**	**67%**	**9%**	**(1,032)**	**-86%**

			CITY OF HATTIESBURG							
	001095 - GENERAL FUND-G/G INS.OTH SER		EXPENDITURE REPORT							
			8 Months Ending 05/31/13							
THIS MONTH			ANNUAL	OPEN PO	YTD	REMAINING	PERCENT		....PROJECTED....	
ACTUAL		OBJ/SUB	BUDGET	& CONTRACTS	ACTUAL	BALANCE	PLAN	ACTUAL	OVER/UNDER	%
	_____									
	PROFESSIONAL SERVICES									
	AUDITING AND ACCOUNTIN	6010								
	TITLE OPINIONS	6016								
	APPRAISAL	6017								
	CONSULTANT SERV/SURVEY	6020								
16,656	CONSULTANT-TWIN FORKS	6020 01	140,000		58,524	81,476	67%	42%	(52,214)	-37%
	CONSULTANT-GORDONS CRK	6020 05	32,568			32,568	67%	0%	(32,568)	-100%
27,289	LEGAL	6025	69,000		64,992	4,008	67%	94%	28,488	41%
	CAFE PLAN-ADMIN.COSTS	6026	4,500		2,772	1,728	67%	62%	(342)	-8%
1,785	MEDICAL	6027	37,500		21,894	15,606	67%	58%	(4,658)	-12%
	UNALLOC.WELLNESS/HOSP.	6028	200			200	67%	0%	(200)	-100%
	IN-SERVICE TRAINING	6029	1,500			1,500	67%	0%	(1,500)	-100%
	ENTERTAINMENT	6033								
	DATA PROCESSING	6035								
	EMER.SHELTER/MDA GRANT	6040	75,000			75,000	67%	0%	(75,000)	-100%
	I.P.-HYBERPLASTIC/MDA	6041								
	COPS-SECURE SCHLS/OJP	6042								
	VISITORS' CTR/MDOT GRA	6046								
435	OTHER PROFESSIONAL SER	6049	175,000		87,122	87,878	67%	50%	(44,316)	-25%
---			---	---	---	---	---	---	---	---
46,165	**PROFESSIONAL SERVICE**		**535,268**		**235,304**	**299,964**	**67%**	**44%**	**(182,312)**	**-34%**
	COMMUNICATIONS									
9,051	TELEPHONE AND TELEGRAP	6060	100,000		67,468	32,532	67%	67%	1,202	1%
	TELEPHONE RENT	6065								
1,580	POSTAGE	6070	51,500		21,238	30,262	67%	41%	(19,642)	-38%
---			---	---	---	---	---	---	---	---
10,631	**COMMUNICATIONS**		**151,500**		**88,706**	**62,794**	**67%**	**59%**	**(18,440)**	**-12%**
	TRANSPORTATION									
	TRAVEL EXPENSE	6110	8,000		4,305	3,695	67%	54%	(1,542)	-19%
	MESSENGER/EXPRESS SERV	6130								
---			---	---	---	---	---	---	---	---
	TRANSPORTATION		**8,000**		**4,305**	**3,695**	**67%**	**54%**	**(1,542)**	**-19%**
	ADVERTISING									
1,000	UNALLOCATED ADVERTISIN	6155	17,600		5,050	12,550	67%	29%	(10,024)	-57%
---			---	---	---	---	---	---	---	---
1,000	**ADVERTISING**		**17,600**		**5,050**	**12,550**	**67%**	**29%**	**(10,024)**	**-57%**

			CITY OF HATTIESBURG							
	001095 - GENERAL FUND-G/G INS.OTH SER		EXPENDITURE REPORT							
			8 Months Ending 05/31/13							
THIS MONTH			ANNUAL	OPEN PO	YTD	REMAINING	PERCENT		....PROJECTED....	
ACTUAL		OBJ/SUB	BUDGET	& CONTRACTS	ACTUAL	BALANCE	PLAN	ACTUAL	OVER/UNDER	%
	PRINTING AND BINDING									
	PRINTING	6200	3,000		950	2,050	67%	32%	(1,574)	-52%
	BINDING	6205								
---			---	---	---	---	---	---	---	---
	PRINTING AND BINDING		**3,000**		**950**	**2,050**	**67%**	**32%**	**(1,574)**	**-52%**
	INSURANCE									
	FIRE & EXTENDED COVERA	6250	166,000			166,000	67%	0%	(166,000)	-100%
	PUBLIC LIAB/PROPERTY D	6255	550,000		233,321	316,680	67%	42%	(200,018)	-36%
	BOILER MACHINERY	6260								
	SURETY AND FORGERY BON	6270	500		375	125	67%	75%	62	12%
326	OTHER INSURANCE	6299	2,200		1,181	1,019	67%	54%	(428)	-19%
---			---	---	---	---	---	---	---	---
326	**INSURANCE**		**718,700**		**234,877**	**483,824**	**67%**	**33%**	**(366,384)**	**-51%**
	REPR/MAINT-OUTSIDE LABO									
	OFFICE EQUIPMENT R&M	6365								
	MOTOR VEHICLE EQ. R&M	6384								
	COMMUNICATION EQ. R&M	6390								
	OTHER REPAIRS AND MAIN	6399	600			600	67%	0%	(600)	-100%
	OTHER REPAIRS AND MAIN	6399 FBC								
---			---	---	---	---	---	---	---	---
	REPR/MAINT-OUTSIDE L		**600**			**600**	**67%**	**0%**	**(600)**	**-100%**
	OTHER SERVICES & CHARGE									
25,000	SETTLEMT OF DAMAGE CLA	6700	64,000		25,400	38,600	67%	40%	(25,900)	-40%
	LATE PAYMENT CHARGE	6705	3,200			3,200	67%	0%	(3,200)	-100%
	COURT COSTS	6710								
	THEFT LOSS	6818								
4,934	PROP.TAX COLL. FEES .0	6830	50,000		34,222	15,778	67%	68%	1,333	3%
1,157	PROP.TAX COLL. FEES.00	6831	58,500		54,224	4,276	67%	93%	22,836	39%
166	BANK SERV/TRF FEE	6832	2,100		1,076	1,024	67%	51%	(486)	-23%
	DUES AND MEMBERSHIPS	6840	25,000		18,320	6,680	67%	73%	2,480	10%
	REGISTRATION FEE/TUITI	6845	6,800		1,574	5,226	67%	23%	(4,438)	-65%
	PROPERTY TAXES	6995	3,900		3,801	99	67%	97%	1,801	46%
3,000	LOBBYING	6998	36,000		24,000	12,000	67%	67%		0%
	SERVICES NOT SPECIFIED	6999	50,000		750	49,250	67%	2%	(48,874)	-98%
---			---	---	---	---	---	---	---	---
34,257	**OTHER SERVICES & CHA**		**299,500**		**163,367**	**136,133**	**67%**	**55%**	**(54,449)**	**-18%**
---			---	---	---	---	---	---	---	---

			CITY OF HATTIESBURG							
	001095 - GENERAL FUND-G/G INS.OTH SER		EXPENDITURE REPORT							
			8 Months Ending 05/31/13							
THIS MONTH			ANNUAL	OPEN PO	YTD	REMAINING	PERCENT		....PROJECTED....	
ACTUAL		OBJ/SUB	BUDGET	& CONTRACTS	ACTUAL	BALANCE	PLAN	ACTUAL	OVER/UNDER	%
92,379	**OTHER SERVICES & CHAR**		**1,734,168**		**732,558**	**1,001,610**	**67%**	**42%**	**(635,330)**	**-37%**
	_____									
	MACHINERY AND EQUIPMENT									
	OFFICE FURN/EQUIP.	7325								
	DATA PROCESSING EQUIP.	7327								
	COMMUNICATION EQUIPMEN	7355								
----------			---------	---------	---------	---------	-----	-----	--------	-----
	MACHINERY AND EQUIPM									
	VEHICLES									
	AUTOMOBILES	7400								
----------			---------	---------	---------	---------	-----	-----	--------	-----
	VEHICLES									
----------			---------	---------	---------	---------	-----	-----	--------	-----
	CAPITAL OUTLAY									
----------			---------	---------	---------	---------	-----	-----	--------	-----
92,826	**EXPENDITURES**		**1,738,539**		**734,250**	**1,004,289**	**67%**	**42%**	**(637,163)**	**-37%**

			CITY OF HATTIESBURG							
	001096 - GENERAL FUND-FED PROGADMIN		EXPENDITURE REPORT							
			8 Months Ending 05/31/13							
THIS MONTH			ANNUAL	OPEN PO	YTD	REMAINING	PERCENT		....PROJECTED....	
ACTUAL		OBJ/SUB	BUDGET	& CONTRACTS	ACTUAL	BALANCE	PLAN	ACTUAL	OVER/UNDER	%
	_____									
	_____									
	SALARIES									
6,326	REGULAR WAGES	4000	99,409		33,612	65,797	67%	34%	(48,991)	-49%
	DISASTER RECOVERY WAGE	4010								
	OVERTIME	4300								
	DISASTER RECOVERY OVER	4310								
---			---	---	---	---	---	---	---	---
6,326	**SALARIES**		**99,409**		**33,612**	**65,797**	**67%**	**34%**	**(48,991)**	**-49%**
	EMPLOYEE BENEFITS									
902	STATE RETIREMENT	4600	14,180		4,793	9,387	67%	34%	(6,990)	-49%
457	F.I.C.A. TAXES	4700	7,610		2,359	5,251	67%	31%	(4,071)	-53%
6,351	HOSPITALIZATION INS.	4800	10,440		9,798	642	67%	94%	4,257	41%
	UNEMPLOYMENT BENEFITS	4900								
	WORKMAN'S COMPENSATION	4910	545			545	67%	0%	(545)	-100%
---			---	---	---	---	---	---	---	---
7,710	**EMPLOYEE BENEFITS**		**32,775**		**16,950**	**15,825**	**67%**	**52%**	**(7,349)**	**-22%**
---			---	---	---	---	---	---	---	---
14,036	**PERSONAL SERVICES**		**132,184**		**50,563**	**81,621**	**67%**	**38%**	**(56,339)**	**-43%**
	_____									
	OFFICE SUPPLIES									
	PAPER	5003								
	PRINTED FORMS	5005	550		546	4	67%	99%	269	49%
	OTHER EXPENDABLE OFF.S	5010	270		135	135	67%	50%	(67)	-25%
	MINOR OFFICE EQUIP/FUR	5020	80		70	10	67%	88%	25	31%
	MICROFILM SUPPLIES	5030								
	SUBSCRIPTIONS,MAGS,MAP	5050	490			490	67%	0%	(490)	-100%
	BOOKS	5070	10		5	5	67%	50%	(2)	-20%
	COMPUTER SUPPLIES	5080								
---			---	---	---	---	---	---	---	---
	OFFICE SUPPLIES		**1,400**		**756**	**644**	**67%**	**54%**	**(266)**	**-19%**
	OPERATING SUPPLIES									
	CLEANING/JANITORIAL SP	5100								
	FOOD	5115	300			300	67%	0%	(300)	-100%
105	GAS AND OIL	5250	1,850		731	1,119	67%	40%	(753)	-41%
	MINOR EQUIPMENT	5460								
	OTHER OPERATING MATL/S	5590								

			CITY OF HATTIESBURG							
	001096 - GENERAL FUND-FED PROGADMIN		EXPENDITURE REPORT							
			8 Months Ending 05/31/13							
THIS MONTH			ANNUAL	OPEN PO	YTD	REMAINING	PERCENT		....PROJECTED....	
ACTUAL		OBJ/SUB	BUDGET	& CONTRACTS	ACTUAL	BALANCE	PLAN	ACTUAL	OVER/UNDER	%
	OTHER OPER.MATL-BROWNS	5591								
---			---	---	---	---	---	---	---	---
105	**OPERATING SUPPLIES**		**2,150**		**731**	**1,419**	**67%**	**34%**	**(1,053)**	**-49%**
	REPAIR & MAINTENANCE SP									
	BUILDING MATERIALS & S	5600								
692	MTR VEHICLE REP. PTS/S	5700	700		696	4	67%	99%	344	49%
	MINOR COMPUTER EQUIP.	5800								
	OTHER REPAIR/MAINT. SP	5990								
---			---	---	---	---	---	---	---	---
692	**REPAIR & MAINTENANCE**		**700**		**696**	**4**	**67%**	**99%**	**344**	**49%**
---			---	---	---	---	---	---	---	---
797	**SUPPLIES AND EXPENSES**		**4,250**		**2,183**	**2,067**	**67%**	**51%**	**(975)**	**-23%**
	_____									
	PROFESSIONAL SERVICES									
	CONSULTANT SERV-BROWNS	6020								
	DATA PROCESSING	6035								
	MICROFILM PROCESSING	6037								
	OTHER PROFESSIONAL SER	6049								
---			---	---	---	---	---	---	---	---
	PROFESSIONAL SERVICE									
	COMMUNICATIONS									
50	TELEPHONE AND TELEGRAP	6060	750		348	402	67%	46%	(228)	-30%
	POSTAGE	6070	100		76	24	67%	76%	14	14%
---			---	---	---	---	---	---	---	---
50	**COMMUNICATIONS**		**850**		**424**	**426**	**67%**	**50%**	**(214)**	**-25%**
	TRANSPORTATION									
	TRAVEL EXPENSE	6110	900		799	101	67%	89%	298	33%
	TRVL EXP-BROWNSFIELD P	6116								
	FREIGHT	6120								
44	MESSENGER/EXPRESS SERV	6130	45		44	1	67%	98%	21	47%
---			---	---	---	---	---	---	---	---
44	**TRANSPORTATION**		**945**		**843**	**102**	**67%**	**89%**	**319**	**34%**
	ADVERTISING									
	ADVERTISING	6150	55		25	30	67%	45%	(17)	-31%
---			---	---	---	---	---	---	---	---
	ADVERTISING		**55**		**25**	**30**	**67%**	**45%**	**(17)**	**-31%**
	PRINTING AND BINDING									

			CITY OF HATTIESBURG							
	001096 - GENERAL FUND-FED PROGADMIN		EXPENDITURE REPORT							
			8 Months Ending 05/31/13							
THIS MONTH			ANNUAL	OPEN PO	YTD	REMAINING	PERCENT		....PROJECTED....	
ACTUAL		OBJ/SUB	BUDGET	& CONTRACTS	ACTUAL	BALANCE	PLAN	ACTUAL	OVER/UNDER	%
	PRINTING	6200								
	BINDING	6205								
---			---	---	---	---	---	---	---	---
	PRINTING AND BINDING									
	INSURANCE									
	SURETY AND FORGERY BON	6270								
---			---	---	---	---	---	---	---	---
	INSURANCE									
	REPR/MAINT-OUTSIDE LABO									
	BUILDING R&M	6350								
	OFFICE EQUIPMENT R&M	6365								
	MOTOR VEHICLE EQ. R&M	6384	200			200	67%	0%	(200)	-100%
	OTHER REPAIRS AND MAIN	6399								
---			---	---	---	---	---	---	---	---
	REPR/MAINT-OUTSIDE L		**200**			**200**	**67%**	**0%**	**(200)**	**-100%**
	RENTALS									
	OFFICE EQUIPMENT RENT	6410								
	OTHER RENT	6449								
---			---	---	---	---	---	---	---	---
	RENTALS									
	OTHER SERVICES & CHARGE									
	DUES AND MEMBERSHIPS	6840								
	REGISTRATION FEE/TUITI	6845	350		350		67%	100%	175	50%
	SERVICES NOT SPECIFIED	6999								
---			---	---	---	---	---	---	---	---
	OTHER SERVICES & CHA		**350**		**350**		**67%**	**100%**	**175**	**50%**
---			---	---	---	---	---	---	---	---
94	**OTHER SERVICES & CHAR**		**2,400**		**1,642**	**758**	**67%**	**68%**	**63**	**3%**
	_____									
	ENVIRON PROJ-BROWNSFI	7296 04								
	MACHINERY AND EQUIPMENT									
	OFFICE FURN/EQUIP.	7325								
	DATA PROCESSING EQUIP.	7327								
	OTHER EQUIPMENT	7399								
---			---	---	---	---	---	---	---	---
	MACHINERY AND EQUIPM									
---			---	---	---	---	---	---	---	---

			CITY OF HATTIESBURG							
	001096 - GENERAL FUND-FED PROGADMIN		EXPENDITURE REPORT							
			8 Months Ending 05/31/13							
THIS MONTH			ANNUAL	OPEN PO	YTD	REMAINING	PERCENT		....PROJECTED....	
ACTUAL		OBJ/SUB	BUDGET	& CONTRACTS	ACTUAL	BALANCE	PLAN	ACTUAL	OVER/UNDER	%
	CAPITAL OUTLAY									
----------			---------	---------	---------	---------	-----	-----	--------	-----
14,927	**EXPENDITURES**		**138,834**		**54,387**	**84,447**	**67%**	**39%**	**(57,253)**	**-41%**

			CITY OF HATTIESBURG							
	001100 - GENERAL FUND-POLICE/PUB.SFTY		EXPENDITURE REPORT							
			8 Months Ending 05/31/13							
THIS MONTH			ANNUAL	OPEN PO	YTD	REMAINING	PERCENT		....PROJECTED....	
ACTUAL		OBJ/SUB	BUDGET	& CONTRACTS	ACTUAL	BALANCE	PLAN	ACTUAL	OVER/UNDER	%
	SALARIES									
649,399	REGULAR WAGES	4000	6,120,005		3,840,861	2,279,144	67%	63%	(358,713)	-6%
	DISASTER RECOVERY WAGE	4010			32,402	(32,402)			48,603	
62,314	OVERTIME	4300	500,000		518,959	(18,959)	67%	104%	278,438	56%
	DISASTER RECOVERY OVER	4310								
711,713	**SALARIES**		**6,620,005**		**4,392,222**	**2,227,783**	**67%**	**66%**	**(31,671)**	**0%**
	EMPLOYEE BENEFITS									
99,808	STATE RETIREMENT	4600	944,030		617,269	326,761	67%	65%	(18,126)	-2%
53,307	F.I.C.A. TAXES	4700	506,440		326,409	180,031	67%	64%	(16,826)	-3%
110,043	HOSPITALIZATION INS.	4800	923,940		533,186	390,754	67%	58%	(124,160)	-13%
	UNEMPLOYMENT BENEFITS	4900	16,000			16,000	67%	0%	(16,000)	-100%
	WORKMAN'S COMPENSATION	4910	140,000			140,000	67%	0%	(140,000)	-100%
263,157	**EMPLOYEE BENEFITS**		**2,530,410**		**1,476,864**	**1,053,546**	**67%**	**58%**	**(315,114)**	**-12%**
974,870	**PERSONAL SERVICES**		**9,150,415**		**5,869,086**	**3,281,329**	**67%**	**64%**	**(346,785)**	**-4%**
	OFFICE SUPPLIES									
960	PAPER	5003	4,866		2,898	1,968	67%	60%	(518)	-11%
	PRINTED FORMS	5005								
261	OTHER EXPENDABLE OFF.S	5010	10,000		4,357	5,643	67%	44%	(3,464)	-35%
	EXPENDABLE OFF.SPL-LIF	5012	4,800		1,343	3,457	67%	28%	(2,785)	-58%
182	MINOR OFFICE EQUIP/FUR	5020	1,000		706	294	67%	71%	59	6%
	MICROFILM SUPPLIES	5030								
	PHOTO SUPPLIES	5040								
	SUBSCRIPTIONS,MAGS,MAP	5050	5,800		4,060	1,740	67%	70%	290	5%
	BOOKS	5070	2,000		683	1,317	67%	34%	(975)	-49%
420	COMPUTER SUPPLIES	5080	22,525		13,539	8,986	67%	60%	(2,216)	-10%
	COMPUTR SUP-LLEBG '01	5081								
	COMPUTR SUP-COPS MORE'	5082								
1,823	**OFFICE SUPPLIES**		**50,991**		**27,586**	**23,405**	**67%**	**54%**	**(9,611)**	**-19%**
	OPERATING SUPPLIES									
2,437	CLEANING/JANITORIAL SP	5100	19,000		13,930	5,070	67%	73%	1,895	10%

			CITY OF HATTIESBURG							
	001100 - GENERAL FUND-POLICE/PUB.SFTY		EXPENDITURE REPORT							
			8 Months Ending 05/31/13							
THIS MONTH			ANNUAL	OPEN PO	YTD	REMAINING	PERCENT		....PROJECTED....	
ACTUAL		OBJ/SUB	BUDGET	& CONTRACTS	ACTUAL	BALANCE	PLAN	ACTUAL	OVER/UNDER	%
	HOUSEHOLD SUPPLIES	5110								
451	FOOD	5115	1,250		559	691	67%	45%	(411)	-33%
	MEDICAL SUPPLIES	5120								
	CHEMICALS	5130								
	FEED FOR ANIMALS	5150	4,500		2,646	1,854	67%	59%	(530)	-12%
5,674	GAS AND OIL	5250	380,000		255,956	124,044	67%	67%	3,934	1%
	LUBRICANTS	5255								
	DIESEL FUEL	5257	6,500		3,236	3,264	67%	50%	(1,646)	-25%
	OTHER FUEL	5260								
4,679	UNIFORMS, BADGES, ETC.	5350	88,420	2,247	67,941	18,232	67%	77%	13,491	15%
6,859	WEARING APPAREL	5355	31,580	66	14,367	17,147	67%	45%	(10,029)	-32%
	ASPHALT & ASPHALT PROD	5400								
	CONCRETE, CEMENT, ETC.	5405								
	HORT./LANDSCAPING SPLY	5440								
	HAND TOOLS	5450								
948	MINOR EQUIPMENT	5460	15,000	1,654	5,391	7,955	67%	36%	(6,913)	-46%
	MINOR EQUIP-LLEBG '03	5461								
	MINOR EQUIP-BYRNE GRAN	5463								
	MINOR EQ-LLEBG/BYRNE'0	5464								
311	OTHER OPERATING MATL/S	5590	17,000		8,775	8,225	67%	52%	(3,837)	-23%
	OTHER OPER.MATL-METH.G	5591								
	OTHER OPER.MATLS-PRO S	5592								
	OTHER OPER.-ALCOHOL CN	5593	380		235	145	67%	62%	(27)	-7%
	OTHER OPER-VICTIM ADVO	5594								
	OTHER OPER-LAW ENF.LIA	5596								
---			---	---	---	---	---	---	---	---
21,360	**OPERATING SUPPLIES**		**563,630**	**3,967**	**373,035**	**186,628**	**67%**	**66%**	**(4,077)**	**-1%**
	REPAIR & MAINTENANCE SP									
35	BUILDING MATERIALS & S	5600	2,500		415	2,085	67%	17%	(1,877)	-75%
134	ELECTRICAL SUPPLIES	5605	2,000	200	934	866	67%	47%	(598)	-30%
	PLUMBING SUPPLIES	5610								
214	PAINT AND PAINTING SPL	5650	1,500	200	521	779	67%	35%	(718)	-48%
21,998	MTR VEHICLE REP. PTS/S	5700	105,900	72	72,919	32,909	67%	69%	3,478	3%
1,514	COMMUNICATION REPAIR P	5750	8,000		6,304	1,696	67%	79%	1,456	18%
	AGRICLTRL REPAIR PTS/S	5755								
	EXPENDABLE WELDING SPL	5770								
	MINOR COMPUTER EQUIP.	5800								

			CITY OF HATTIESBURG							
	001100 - GENERAL FUND-POLICE/PUB.SFTY		EXPENDITURE REPORT							
			8 Months Ending 05/31/13							
THIS MONTH			ANNUAL	OPEN PO	YTD	REMAINING	PERCENT		....PROJECTED....	
ACTUAL		OBJ/SUB	BUDGET	& CONTRACTS	ACTUAL	BALANCE	PLAN	ACTUAL	OVER/UNDER	%
3,708	OTHER REPAIR/MAINT. SP	5990	12,500	750	10,334	1,416	67%	83%	3,001	24%
	REPR SPLY-8/29/05 STOR	5995								
---			---	---	---	---	---	---	---	---
27,602	**REPAIR & MAINTENANCE**		**132,400**	**1,222**	**91,427**	**39,751**	**67%**	**69%**	**4,740**	**4%**
---			---	---	---	---	---	---	---	---
50,785	**SUPPLIES AND EXPENSES**		**747,021**	**5,189**	**492,048**	**249,784**	**67%**	**66%**	**(8,949)**	**-1%**
	PROFESSIONAL SERVICES									
	LEGAL	6025								
	MEDICAL	6027	35,000		9,377	25,623	67%	27%	(20,934)	-60%
	VETERINARIAN	6030	3,500		1,625	1,875	67%	46%	(1,062)	-30%
	ENTERTAINMENT	6033								
	DATA PROCESSING	6035								
	MICROFILM PROCESSING	6037								
	METRO CRIME STOPPERS	6039								
	OTHER PROF.-ALCOHOL CN	6047								
	OTHER PROF.-VICTIM'S A	6048								
150	OTHER PROFESSIONAL SER	6049	14,082		8,927	5,155	67%	63%	(691)	-5%
	POL.LATERAL TRNG FEE	6049 26								
---			---	---	---	---	---	---	---	---
150	**PROFESSIONAL SERVICE**		**52,582**		**19,928**	**32,654**	**67%**	**38%**	**(22,690)**	**-43%**
	COMMUNICATIONS									
2,440	TELEPHONE AND TELEGRAP	6060	30,000		19,767	10,233	67%	66%	(349)	-1%
	TELEPHONE-GRANT	6060 GRANT								
	TELEPHONE RENT	6065								
3,312	NETWORK WIRELESS	6069	40,000		23,294	16,706	67%	58%	(5,058)	-13%
	POSTAGE	6070	200			200	67%	0%	(200)	-100%
	OTHER COMMUNICATION EX	6099								
---			---	---	---	---	---	---	---	---
5,752	**COMMUNICATIONS**		**70,200**		**43,061**	**27,139**	**67%**	**61%**	**(5,608)**	**-8%**
	TRANSPORTATION									
2,114	TRAVEL EXPENSE	6110	11,000		9,640	1,360	67%	88%	3,460	31%
	TRVL EXP-TRAFFIC GRANT	6111								
	TRVL EXP-VICTIM'S ADV	6112								
	TRVL EXP-TERRORISM PRE	6113								
	TRAVEL EXP-PROJ SAFE N	6114								
	TRVL/TRNG-COP'S METH G	6116								

			CITY OF HATTIESBURG							
	001100 - GENERAL FUND-POLICE/PUB.SFTY		EXPENDITURE REPORT							
			8 Months Ending 05/31/13							
THIS MONTH			ANNUAL	OPEN PO	YTD	REMAINING	PERCENT		....PROJECTED....	
ACTUAL		OBJ/SUB	BUDGET	& CONTRACTS	ACTUAL	BALANCE	PLAN	ACTUAL	OVER/UNDER	%
	TRVL EXP-LAW ENF LIAIS	6118								
	TRVL EXP-ALCOHOL GRANT	6119	2,534			2,534	67%	0%	(2,534)	-100%
	FREIGHT	6120								
27	MESSENGER/EXPRESS SERV	6130	1,000		431	569	67%	43%	(353)	-35%
---			---	---	---	---	---	---	---	---
2,141	**TRANSPORTATION**		**14,534**		**10,070**	**4,464**	**67%**	**69%**	**571**	**4%**
	ADVERTISING									
	ADVERTISING	6150								
---			---	---	---	---	---	---	---	---
	ADVERTISING									
	PRINTING AND BINDING									
	PRINTING	6200	3,161			3,161	67%	0%	(3,161)	-100%
	BINDING	6205								
	FILM PROCESSING	6240								
---			---	---	---	---	---	---	---	---
	PRINTING AND BINDING		**3,161**			**3,161**	**67%**	**0%**	**(3,161)**	**-100%**
	INSURANCE									
	FIRE & EXTENDED COVERA	6250								
	PUBLIC LIAB/PROPERTY D	6255								
	BOILER MACHINERY	6260								
	AUTOMOBILE INSURANCE	6265	13,839		13,839		67%	100%	6,919	50%
	SURETY AND FORGERY BON	6270	650		625	25	67%	96%	287	44%
	OTHER INSURANCE	6299								
---			---	---	---	---	---	---	---	---
	INSURANCE		**14,489**		**14,464**	**25**	**67%**	**100%**	**7,207**	**50%**
	UTILITIES									
219	GAS	6300	10,000		3,718	6,282	67%	37%	(4,422)	-44%
13,058	ELECTRICITY	6305	88,000		51,505	36,495	67%	59%	(10,742)	-12%
---			---	---	---	---	---	---	---	---
13,277	**UTILITIES**		**98,000**		**55,223**	**42,777**	**67%**	**56%**	**(15,165)**	**-15%**
	REPR/MAINT-OUTSIDE LABO									
	BUILDING R&M	6350								
	8/29/05 STORM REPAIRS	6353								
	ELECTRICAL R&M	6355								
	PLUMBING EQUIPMENT R&M	6357								
	OFFICE EQUIPMENT R&M	6365	40,000		32,558	7,442	67%	81%	8,837	22%
	OFF.EQ.R&M-COPS MORE	6366								

			CITY OF HATTIESBURG							
	001100 - GENERAL FUND-POLICE/PUB.SFTY		EXPENDITURE REPORT							
			8 Months Ending 05/31/13							
THIS MONTH			ANNUAL	OPEN PO	YTD	REMAINING	PERCENT		....PROJECTED....	
ACTUAL		OBJ/SUB	BUDGET	& CONTRACTS	ACTUAL	BALANCE	PLAN	ACTUAL	OVER/UNDER	%
	HOUSEHOLD EQUIPMENT R&	6370								
349	FIXED EQUIPMENT R&M	6380	30,000		16,228	13,772	67%	54%	(5,658)	-19%
	MINOR EQUIPMENT R&M	6382								
12,529	MOTOR VEHICLE EQ. R&M	6384	90,000		63,280	26,720	67%	70%	4,920	5%
	AGRICULTURAL EQ. R&M	6387								
75	COMMUNICATION EQ. R&M	6390	3,000		1,425	1,575	67%	48%	(862)	-29%
	CLEANING AND PAINTING	6392								
192	DISINFECT./EXTERMINATI	6394	700		575	125	67%	82%	162	23%
	SIGN PAINTING	6396								
360	TOW IN CHARGES	6398	5,500		2,920	2,580	67%	53%	(1,120)	-20%
	OTHER REPAIRS AND MAIN	6399								
---			---	---	---	---	---	---	---	---
13,504	**REPR/MAINT-OUTSIDE L**		**169,200**		**116,986**	**52,214**	**67%**	**69%**	**6,279**	**4%**
	RENTALS									
518	OFFICE EQUIPMENT RENT	6410	6,216		4,250	1,966	67%	68%	159	3%
	MOTORCYCLE RENT	6417	58,118	35,100	23,018		67%	40%	(23,590)	-41%
68	CYLINDER RENT	6425	600		466	134	67%	78%	99	17%
	UNIFORM RENT	6430								
	MOP-MAT-RAG RENT	6435								
	OTHER RENT	6449								
---			---	---	---	---	---	---	---	---
586	**RENTALS**		**64,934**	**35,100**	**27,734**	**2,100**	**67%**	**43%**	**(23,332)**	**-36%**
	OTHER SERVICES & CHARGE									
	EXHIBITIONS & PROMOTIO	6500								
	SETTLEMT OF DAMAGE CLA	6700								
	COURT COSTS	6710								
	JAIL EXPENSE	6815								
	EVIDENCE BUY MONEY	6817								
	THEFT LOSS	6818								
	CASH OVERAGE/SHORTAGE	6819								
	BANK SERV/TRF FEE	6832								
	REFUNDS	6835								
	POLICE FINE REFUNDS	6835 PF								
---			---	---	---	---	---	---	---	---
	REFUNDS									
29	NSF CHECKS	6836	5,000		2,277	2,723	67%	46%	(1,584)	-32%
50	DUES AND MEMBERSHIPS	6840	4,225		870	3,355	67%	21%	(2,919)	-69%

			CITY OF HATTIESBURG							
	001100 - GENERAL FUND-POLICE/PUB.SFTY		EXPENDITURE REPORT							
			8 Months Ending 05/31/13							
THIS MONTH			ANNUAL	OPEN PO	YTD	REMAINING	PERCENT		....PROJECTED....	
ACTUAL		OBJ/SUB	BUDGET	& CONTRACTS	ACTUAL	BALANCE	PLAN	ACTUAL	OVER/UNDER	%
724	REGISTRATION FEE/TUITI	6845	6,500		3,669	2,831	67%	56%	(996)	-15%
	LAUNDRY	6850								
	SERVICES NOT SPECIFIED	6999								
---			---	---	---	---	---	---	---	---
803	**OTHER SERVICES & CHA**		**15,725**		**6,816**	**8,909**	**67%**	**43%**	**(5,501)**	**-35%**
---			---	---	---	---	---	---	---	---
36,213	**OTHER SERVICES & CHAR**		**502,825**	**35,100**	**294,283**	**173,442**	**67%**	**59%**	**(61,400)**	**-12%**
	_____									
	BUILDING/BLD IMPROVEMEN									
	BUILDINGS	7100								
	POLICE SERV CTR BLDG	7100 22								
---			---	---	---	---	---	---	---	---
	BUILDINGS									
	BUILDING IMPROVEMENTS	7150								
	POLICE COMPLEX	7150 07								
	DEPOT SUBSTATION	7150 37								
	MOBILE ST SUBSTATION	7150 39								
	PALMERS CROSSING SUBS	7150 40								
---			---	---	---	---	---	---	---	---
	BUILDING IMPROVEMEN									
---			---	---	---	---	---	---	---	---
	BUILDING/BLD IMPROVE									
	IMPROVEMENT OTHER THAN									
	PARKING LOT/DRIVEWAY	7227								
	LANDSCAPING	7250								
	OTHER IMPROVEMENTS	7295								
---			---	---	---	---	---	---	---	---
	IMPROVEMENT OTHER TH									
	MACHINERY AND EQUIPMENT									
	8/29/05 STORM EQUIP	7302								
	EQUIP-METH GRANT	7303								
	EQUIP-DOMESTIC PREP	7312								
	EQUIP-HOMELAND SECURIT	7313								
	EQUIP-TERRORISM PREVEN	7314								
	EQUIP-TERRORISM '05	7316								
	EQ-DOMESTIC PREP'05	7318								
	EQUIP-PROJ SAFE NEIGHB	7319								

			CITY OF HATTIESBURG							
	001100 - GENERAL FUND-POLICE/PUB.SFTY		EXPENDITURE REPORT							
			8 Months Ending 05/31/13							
THIS MONTH			ANNUAL	OPEN PO	YTD	REMAINING	PERCENT		....PROJECTED....	
ACTUAL		OBJ/SUB	BUDGET	& CONTRACTS	ACTUAL	BALANCE	PLAN	ACTUAL	OVER/UNDER	%
	HOUSEHOLD FURN/EQUIP.	7320								
	EQUIP-BYRNE '11	7323	83,000		79,828	3,172	67%	96%	36,742	44%
	EQUIP-BYRNE '12	7324	24,051		14,431	9,620	67%	60%	(2,404)	-10%
	OFFICE FURN/EQUIP.	7325								
	COPS TECH GRANT EQUIP	7326								
	DATA PROCESSING EQUIP.	7327								
	FEMA-EMER.WARNING SIRE	7330								
	EQUIP-JUSTICE ASSIST G	7331								
	COMMUNICATION EQUIPMEN	7355	58,975			58,975	67%	0%	(58,975)	-100%
	TRAFFIC CONTROL EQUIP.	7360								
	EQUIP-BYRNE '09	7375								
	OTHER EQUIP-STOP VIOL	7397								
	OTHER EQUIP-ALCOHOL GR	7398	1,260		1,060	200	67%	84%	330	26%
	OTHER EQUIPMENT	7399	25,625		25,625		67%	100%	12,812	50%
---			---	---	---	---	---	---	---	---
	MACHINERY AND EQUIPM		**192,911**		**120,944**	**71,967**	**67%**	**63%**	**(11,495)**	**-6%**
	VEHICLES									
1,347	AUTOMOBILES	7400	423,400	228,180	175,152	20,068	67%	41%	(160,672)	-38%
	AUTOMOBILES-METH GRANT	7401								
	AUTOMOBILES-BYRNE GRAN	7402								
	MOTORCYCLES	7405								
	PICK UP TRUCKS	7420								
---			---	---	---	---	---	---	---	---
1,347	**VEHICLES**		**423,400**	**228,180**	**175,152**	**20,068**	**67%**	**41%**	**(160,672)**	**-38%**
	OTHER									
	ZOOLOGICAL ANIMALS	7505								
---			---	---	---	---	---	---	---	---
	OTHER									
---			---	---	---	---	---	---	---	---
1,347	**CAPITAL OUTLAY**		**616,311**	**228,180**	**296,096**	**92,035**	**67%**	**48%**	**(172,167)**	**-28%**
---			---	---	---	---	---	---	---	---
1,063,215	**EXPENDITURES**		**11,016,572**	**268,469**	**6,951,513**	**3,796,590**	**67%**	**63%**	**(589,302)**	**-5%**

			CITY OF HATTIESBURG							
	001131 - GENERAL FUND-JOINT P&FTRNG.		EXPENDITURE REPORT							
			8 Months Ending 05/31/13							
THIS MONTH			ANNUAL	OPEN PO	YTD	REMAINING	PERCENT		....PROJECTED....	
ACTUAL		OBJ/SUB	BUDGET	& CONTRACTS	ACTUAL	BALANCE	PLAN	ACTUAL	OVER/UNDER	%
	SALARIES									
2,543	REGULAR WAGES	4000	22,040		15,259	6,781	67%	69%	848	4%
	DISASTER RECOVERY WAGE	4010								
	OVERTIME	4300	1,000		11	989	67%	1%	(983)	-98%
	DISASTER RECOVERY OVER	4310								
---			---	---	---	---	---	---	---	---
2,543	**SALARIES**		**23,040**		**15,269**	**7,771**	**67%**	**66%**	**(136)**	**-1%**
	EMPLOYEE BENEFITS									
363	STATE RETIREMENT	4600	3,290		2,177	1,113	67%	66%	(24)	-1%
193	F.I.C.A. TAXES	4700	1,770		1,154	616	67%	65%	(38)	-2%
652	HOSPITALIZATION INS.	4800	5,220		3,368	1,852	67%	65%	(168)	-3%
	UNEMPLOYMENT BENEFITS	4900								
	WORKMAN'S COMPENSATION	4910	113			113	67%	0%	(113)	-100%
---			---	---	---	---	---	---	---	---
1,207	**EMPLOYEE BENEFITS**		**10,393**		**6,699**	**3,694**	**67%**	**64%**	**(344)**	**-3%**
---			---	---	---	---	---	---	---	---
3,751	**PERSONAL SERVICES**		**33,433**		**21,968**	**11,465**	**67%**	**66%**	**(481)**	**-1%**
	OFFICE SUPPLIES									
	PAPER	5003	600			600	67%	0%	(600)	-100%
	PRINTED FORMS	5005	600			600	67%	0%	(600)	-100%
509	OTHER EXPENDABLE OFF.S	5010	2,950		2,601	349	67%	88%	951	32%
	SPLY-RRT COORDINATOR	5013	270		541	(271)	67%	200%	541	200%
450	MINOR OFFICE EQUIP/FUR	5020	3,000		1,234	1,766	67%	41%	(1,148)	-38%
	CASSETTES, TAPES	5035								
	PHOTO SUPPLIES	5040	500		103	397	67%	21%	(345)	-69%
	SUBSCRIPTIONS,MAGS,MAP	5050	800		103	697	67%	13%	(645)	-81%
108	BOOKS-POLICE	5070	1,200		167	1,033	67%	14%	(949)	-79%
108	BOOKS-FIRE	5071	3,000		1,293	1,707	67%	43%	(1,060)	-35%
	COMPUTER SUPPLIES	5080	1,200		999	201	67%	83%	298	25%
---			---	---	---	---	---	---	---	---
1,175	**OFFICE SUPPLIES**		**14,120**		**7,042**	**7,078**	**67%**	**50%**	**(3,556)**	**-25%**
	OPERATING SUPPLIES									
325	CLEANING/JANITORIAL SP	5100	3,000		2,661	339	67%	89%	991	33%
93	HOUSEHOLD SUPPLIES	5110	1,500		93	1,407	67%	6%	(1,360)	-91%

			CITY OF HATTIESBURG							
	001131 - GENERAL FUND-JOINT P&FTRNG.		EXPENDITURE REPORT							
			8 Months Ending 05/31/13							
THIS MONTH			ANNUAL	OPEN PO	YTD	REMAINING	PERCENT		....PROJECTED....	
ACTUAL		OBJ/SUB	BUDGET	& CONTRACTS	ACTUAL	BALANCE	PLAN	ACTUAL	OVER/UNDER	%
	FOOD	5115	2,000		310	1,690	67%	16%	(1,534)	-77%
	MEDICAL SUPPLIES	5120	2,000		53	1,947	67%	3%	(1,920)	-96%
	GAS AND OIL	5250	2,000		297	1,703	67%	15%	(1,554)	-78%
	WEARING APPAREL-POLICE	5355	2,500		1,909	591	67%	76%	363	15%
85	WEARING APPAREL-FIRE	5356	2,500		651	1,849	67%	26%	(1,523)	-61%
	ASPHALT & ASPHALT PROD	5400								
	CONCRETE, CEMENT, ETC.	5405	12,000			12,000	67%	0%	(12,000)	-100%
	BRICK,STONE,MORTAR,ETC	5410								
	SAND,CLAY,GRVL,FILL DI	5415	5,000			5,000	67%	0%	(5,000)	-100%
	HORT./LANDSCAPING SPLY	5440	500			500	67%	0%	(500)	-100%
	HAND TOOLS	5450	1,970		1,656	314	67%	84%	514	26%
177	MINOR EQUIPMENT-POLICE	5460	13,645		6,414	7,231	67%	47%	(4,023)	-29%
832	MINOR EQUIPMENT-FIRE	5462	8,200	70	3,728	4,402	67%	45%	(2,608)	-32%
32	MINOR EQUIP-REGIONAL R	5463	27,500	4,147	17,267	6,086	67%	63%	(1,599)	-6%
	SWIFT WATER RESCUE SUP	5465	2,300		2,111	189	67%	92%	866	38%
1,053	HAZ.MAT SUPPLIES	5466	10,000		3,531	6,469	67%	35%	(4,703)	-47%
	P&F CLASSES-(FEE) SUPP	5469								
	OTHER OPER.MATL-POLICE	5590	34,945	9,363	5,320	20,262	67%	15%	(26,965)	-77%
2,355	OTHER OPER.MATL-FIRE	5591	16,000	1,500	10,384	4,116	67%	65%	(424)	-3%
---			---	---	---	---	---	---	---	---
4,950	**OPERATING SUPPLIES**		**147,560**	**15,080**	**56,385**	**76,096**	**67%**	**38%**	**(62,982)**	**-43%**
	REPAIR & MAINTENANCE SP									
2,040	BUILDING MATERIALS & S	5600	6,000		2,923	3,077	67%	49%	(1,615)	-27%
(29)	ELECTRICAL SUPPLIES	5605	1,800		297	1,503	67%	17%	(1,354)	-75%
	PLUMBING SUPPLIES	5610	1,200		1,178	22	67%	98%	567	47%
	PAINT AND PAINTING SPL	5650	1,500		117	1,383	67%	8%	(1,324)	-88%
	MTR VEHICLE REP. PTS/S	5700	1,068		950	118	67%	89%	357	33%
293	OTHER REPAIR/MAINT. SP	5990	6,130		4,273	1,857	67%	70%	279	5%
---			---	---	---	---	---	---	---	---
2,303	**REPAIR & MAINTENANCE**		**17,698**		**9,739**	**7,959**	**67%**	**55%**	**(3,089)**	**-17%**
---			---	---	---	---	---	---	---	---
8,428	**SUPPLIES AND EXPENSES**		**179,378**	**15,080**	**73,165**	**91,134**	**67%**	**41%**	**(69,630)**	**-39%**
	_____									
	PROFESSIONAL SERVICES									
	MEDICAL	6027	200			200	67%	0%	(200)	-100%
	P&F CLASSES-(FEE) SERV	6045	100			100	67%	0%	(100)	-100%
	OTHER PROFESSIONAL SER	6049	1,000			1,000	67%	0%	(1,000)	-100%

			CITY OF HATTIESBURG							
	001131 - GENERAL FUND-JOINT P&FTRNG.		EXPENDITURE REPORT							
			8 Months Ending 05/31/13							
THIS MONTH			ANNUAL	OPEN PO	YTD	REMAINING	PERCENT		....PROJECTED....	
ACTUAL		OBJ/SUB	BUDGET	& CONTRACTS	ACTUAL	BALANCE	PLAN	ACTUAL	OVER/UNDER	%
	RRT PLANNING-HOMELAND	6049 21								
10,989	RRT TRAINING-HOMELAND	6049 22	45,000		43,254	1,746	67%	96%	19,881	44%
	H'BURG HIGH-HOMELAND	6049 23								
	MGMT/ADMIN-HOMELAND S	6049 24								
	OTHER-CITY HOMELAND S	6049 25								
	OTHER	6049 99								
---			---	---	---	---	---	---	---	---
10,989	**OTHER PROFESSIONAL**		**46,000**		**43,254**	**2,746**	**67%**	**94%**	**18,881**	**41%**
---			---	---	---	---	---	---	---	---
10,989	**PROFESSIONAL SERVICE**		**46,300**		**43,254**	**3,046**	**67%**	**93%**	**18,581**	**40%**
	COMMUNICATIONS									
	TELEPHONE AND TELEGRAP	6060	500		450	50	67%	90%	175	35%
263	TELEPHONE-RRT COORDINA	6060 GRANT	1,080		880	200	67%	81%	240	22%
	POSTAGE	6070	100			100	67%	0%	(100)	-100%
---			---	---	---	---	---	---	---	---
263	**COMMUNICATIONS**		**1,680**		**1,330**	**350**	**67%**	**79%**	**315**	**19%**
	TRANSPORTATION									
893	TRVL EXP-POLICE	6110	8,000		3,417	4,583	67%	43%	(2,874)	-36%
786	TRVL EXP-FIRE	6111	8,000		5,414	2,586	67%	68%	121	2%
3,480	TRVL EXP-RRT COORDINAT	6112	8,500		7,835	665	67%	92%	3,252	38%
	TRVL EXP-RESPONSE TEAM	6116	1,000			1,000	67%	0%	(1,000)	-100%
	FREIGHT	6120	300			300	67%	0%	(300)	-100%
---			---	---	---	---	---	---	---	---
5,159	**TRANSPORTATION**		**25,800**		**16,666**	**9,134**	**67%**	**65%**	**(800)**	**-3%**
	ADVERTISING									
	ADVERTISING	6150								
---			---	---	---	---	---	---	---	---
	ADVERTISING									
	PRINTING AND BINDING									
	PRINTING	6200								
	FILM PROCESSING	6240								
---			---	---	---	---	---	---	---	---
	PRINTING AND BINDING									
	INSURANCE									
	BOILER MACHINERY	6260								
	SURETY AND FORGERY BON	6270								
	OTHER INSURANCE	6299								

			CITY OF HATTIESBURG							
	001131 - GENERAL FUND-JOINT P&FTRNG.		EXPENDITURE REPORT							
			8 Months Ending 05/31/13							
THIS MONTH			ANNUAL	OPEN PO	YTD	REMAINING	PERCENT		....PROJECTED....	
ACTUAL		OBJ/SUB	BUDGET	& CONTRACTS	ACTUAL	BALANCE	PLAN	ACTUAL	OVER/UNDER	%
---			---	---	---	---	---	---	---	---
	INSURANCE									
	UTILITIES									
245	GAS	6300	5,000		2,765	2,235	67%	55%	(852)	-17%
1,471	ELECTRICITY	6305	19,232		9,177	10,055	67%	48%	(5,466)	-28%
	WATER	6315								
---			---	---	---	---	---	---	---	---
1,716	**UTILITIES**		**24,232**		**11,942**	**12,290**	**67%**	**49%**	**(6,318)**	**-26%**
	REPR/MAINT-OUTSIDE LABO									
	BUILDING R&M	6350	3,000		368	2,633	67%	12%	(2,448)	-82%
	OFFICE EQUIPMENT R&M	6365	1,300			1,300	67%	0%	(1,300)	-100%
	MINOR EQUIPMENT R&M	6382	600		466	134	67%	78%	99	17%
	MOTOR VEHICLE EQ. R&M	6384	800		625	175	67%	78%	137	17%
	CLEANING AND PAINTING	6392	400		275	125	67%	69%	12	3%
171	DISINFECT./EXTERMINATI	6394	1,300		793	507	67%	61%	(110)	-8%
1	OTHER REPAIRS AND MAIN	6399	5,100	2,000	2,198	902	67%	43%	(1,802)	-35%
---			---	---	---	---	---	---	---	---
172	**REPR/MAINT-OUTSIDE L**		**12,500**	**2,000**	**4,725**	**5,775**	**67%**	**38%**	**(5,412)**	**-43%**
	RENTALS									
	OTHER RENT	6449	3,700		3,593	107	67%	97%	1,689	46%
---			---	---	---	---	---	---	---	---
	RENTALS		**3,700**		**3,593**	**107**	**67%**	**97%**	**1,689**	**46%**
	OTHER SERVICES & CHARGE									
	PETTY CASH LOSS/STORM	6818								
	DUES AND MEMBERSHIPS	6840	500			500	67%	0%	(500)	-100%
2,208	REGISTRATN FEE-POLICE	6845	9,775		5,773	4,002	67%	59%	(1,115)	-11%
465	REGISTRATN FEE-FIRE	6846	8,500	440	6,595	1,465	67%	78%	1,392	16%
	SERVICES NOT SPECIFIED	6999	300			300	67%	0%	(300)	-100%
---			---	---	---	---	---	---	---	---
2,673	**OTHER SERVICES & CHA**		**19,075**	**440**	**12,368**	**6,267**	**67%**	**65%**	**(523)**	**-3%**
---			---	---	---	---	---	---	---	---
20,972	**OTHER SERVICES & CHAR**		**133,287**	**2,440**	**93,878**	**36,969**	**67%**	**70%**	**7,530**	**6%**
	_____									
	BUILDING/BLD IMPROVEMEN									
	BUILDING IMPROVEMENTS	7150								
	P&F TRAINING BLDG	7150 34	74,694		74,694		67%	100%	37,347	50%
---			---	---	---	---	---	---	---	---

			CITY OF HATTIESBURG							
	001131 - GENERAL FUND-JOINT P&FTRNG.		EXPENDITURE REPORT							
			8 Months Ending 05/31/13							
THIS MONTH			ANNUAL	OPEN PO	YTD	REMAINING	PERCENT		....PROJECTED....	
ACTUAL		OBJ/SUB	BUDGET	& CONTRACTS	ACTUAL	BALANCE	PLAN	ACTUAL	OVER/UNDER	%
	BUILDING IMPROVEMEN		**74,694**		**74,694**		**67%**	**100%**	**37,347**	**50%**
---			---	---	---	---	---	---	---	---
	BUILDING/BLD IMPROVE		**74,694**		**74,694**		**67%**	**100%**	**37,347**	**50%**
	IMPROVEMENT OTHER THAN									
	PARKING LOT/DRIVEWAY	7227								
---			---	---	---	---	---	---	---	---
	IMPROVEMENT OTHER TH									
	MACHINERY AND EQUIPMENT									
	EQUIP-RESPONSE TEAM'07	7311								
	EQUIP-RESPONSE TEAM'04	7314								
	EQUIP-CITY HOMELAND SE	7316								
	OFFICE FURN/EQUIP.	7325								
	COMMUNICATION EQUIPMEN	7355								
	TRAFFIC CONTROL EQUIP.	7360								
	OTHER EQUIP-HAZ.MAT	7398								
	OTHER EQUIPMENT	7399								
---			---	---	---	---	---	---	---	---
	MACHINERY AND EQUIPM									
	VEHICLES									
	AUTOMOBILES	7400								
	BUSES	7410								
---			---	---	---	---	---	---	---	---
	VEHICLES									
---			---	---	---	---	---	---	---	---
	CAPITAL OUTLAY		**74,694**		**74,694**		**67%**	**100%**	**37,347**	**50%**
---			---	---	---	---	---	---	---	---
33,151	**EXPENDITURES**		**420,792**	**17,520**	**263,705**	**139,567**	**67%**	**63%**	**(25,234)**	**-6%**

			CITY OF HATTIESBURG							
	001160 - GENERAL FUND-FIRE DIVISION		EXPENDITURE REPORT							
			8 Months Ending 05/31/13							
THIS MONTH			ANNUAL	OPEN PO	YTD	REMAINING	PERCENT		....PROJECTED....	
ACTUAL		OBJ/SUB	BUDGET	& CONTRACTS	ACTUAL	BALANCE	PLAN	ACTUAL	OVER/UNDER	%
	_____									
	_____									
	SALARIES									
490,705	REGULAR WAGES	4000	4,520,628		2,940,178	1,580,450	67%	65%	(110,360)	-2%
	DISASTER RECOVERY WAGE	4010			9,801	(9,801)			14,701	
75,524	OVERTIME	4300	226,500		358,341	(131,841)	67%	158%	311,011	137%
	DISASTER RECOVERY OVER	4310								
---			---	---	---	---	---	---	---	---
566,230	**SALARIES**		**4,747,128**		**3,308,320**	**1,438,808**	**67%**	**70%**	**215,352**	**5%**
	EMPLOYEE BENEFITS									
78,042	STATE RETIREMENT	4600	678,150		455,780	222,370	67%	67%	5,520	1%
40,566	F.I.C.A. TAXES	4700	363,810		233,648	130,162	67%	64%	(13,338)	-4%
81,440	HOSPITALIZATION INS.	4800	652,500		396,756	255,744	67%	61%	(57,366)	-9%
	UNEMPLOYMENT BENEFITS	4900								
	WORKMAN'S COMPENSATION	4910	165,000			165,000	67%	0%	(165,000)	-100%
---			---	---	---	---	---	---	---	---
200,048	**EMPLOYEE BENEFITS**		**1,859,460**		**1,086,184**	**773,276**	**67%**	**58%**	**(230,184)**	**-12%**
---			---	---	---	---	---	---	---	---
766,278	**PERSONAL SERVICES**		**6,606,588**		**4,394,504**	**2,212,084**	**67%**	**67%**	**(14,832)**	**0%**
	_____									
	OFFICE SUPPLIES									
141	PAPER	5003	500		479	21	67%	96%	218	44%
352	PRINTED FORMS	5005	500		352	148	67%	70%	28	6%
24	OTHER EXPENDABLE OFF.S	5010	4,207	324	3,511	372	67%	83%	1,059	25%
74	MINOR OFFICE EQUIP/FUR	5020	7,750		7,530	220	67%	97%	3,545	46%
	CASSETTES, TAPES	5035								
	PHOTO SUPPLIES	5040								
	SUBSCRIPTIONS,MAGS,MAP	5050	160			160	67%	0%	(160)	-100%
	BOOKS	5070	1,000		910	90	67%	91%	365	37%
	COMPUTER SUPPLIES	5080	1,000		217	783	67%	22%	(674)	-67%
---			---	---	---	---	---	---	---	---
590	**OFFICE SUPPLIES**		**15,117**	**324**	**12,998**	**1,795**	**67%**	**86%**	**4,380**	**29%**
	OPERATING SUPPLIES									
960	CLEANING/JANITORIAL SP	5100	12,000		8,866	3,134	67%	74%	1,299	11%
(15)	HOUSEHOLD SUPPLIES	5110	2,000		405	1,595	67%	20%	(1,392)	-70%
7	FOOD	5115	400		204	196	67%	51%	(94)	-24%
	MEDICAL SUPPLIES	5120	5,470		3,731	1,740	67%	68%	126	2%

			CITY OF HATTIESBURG							
	001160 - GENERAL FUND-FIRE DIVISION		EXPENDITURE REPORT							
			8 Months Ending 05/31/13							
THIS MONTH			ANNUAL	OPEN PO	YTD	REMAINING	PERCENT		....PROJECTED....	
ACTUAL		OBJ/SUB	BUDGET	& CONTRACTS	ACTUAL	BALANCE	PLAN	ACTUAL	OVER/UNDER	%
	LABORATORY SUPPLIES	5125								
	CHEMICALS	5130								
2,644	GAS AND OIL	5250	21,000		14,245	6,755	67%	68%	367	2%
	LUBRICANTS	5255	2,214		22	2,192	67%	1%	(2,180)	-98%
2,494	DIESEL FUEL	5257	85,000		51,695	33,305	67%	61%	(7,457)	-9%
	OTHER FUEL	5260	200			200	67%	0%	(200)	-100%
575	UNIFORMS, BADGES, ETC.	5350	48,000		2,610	45,390	67%	5%	(44,084)	-92%
69	WEARING APPAREL	5355	15,000	1,717	6,303	6,980	67%	42%	(5,545)	-37%
	ASPHALT & ASPHALT PROD	5400								
	CONCRETE, CEMENT, ETC.	5405	6,000		2,282	3,719	67%	38%	(2,576)	-43%
	HORT./LANDSCAPING SPLY	5440	600		495	105	67%	83%	142	24%
	HAND TOOLS	5450	2,400		582	1,818	67%	24%	(1,526)	-64%
47	MINOR EQUIPMENT	5460	9,000		8,155	845	67%	91%	3,232	36%
	MINOR FIRE FIGHTING EQ	5462	10,000	2,026	6,743	1,231	67%	67%	114	1%
	SWIFT WATER RESCUE SUP	5465	2,000		1,640	360	67%	82%	460	23%
	FIRE HOSE	5470	6,000		2,663	3,337	67%	44%	(2,005)	-33%
	RECREATIONAL SUPPLIES	5510								
1,579	SFTY/FIRE P/MATL CONTR	5535	4,000		3,082	918	67%	77%	623	16%
	OTHER OPERATING MATL/S	5590	3,000	144	758	2,099	67%	25%	(1,862)	-62%
---			---	---	---	---	---	---	---	---
8,360	**OPERATING SUPPLIES**		**234,284**	**3,887**	**114,479**	**115,919**	**67%**	**49%**	**(62,565)**	**-27%**
	REPAIR & MAINTENANCE SP									
3,834	BUILDING MATERIALS & S	5600	15,000		10,598	4,402	67%	71%	897	6%
138	ELECTRICAL SUPPLIES	5605	3,500		1,851	1,649	67%	53%	(723)	-21%
79	PLUMBING SUPPLIES	5610	2,100		1,868	232	67%	89%	702	33%
	PAINT AND PAINTING SPL	5650	2,200		158	2,042	67%	7%	(1,962)	-89%
570	MTR VEHICLE REP. PTS/S	5700	59,700	2,678	23,230	33,792	67%	39%	(24,854)	-42%
203	COMMUNICATION REPAIR P	5750	5,000		3,446	1,554	67%	69%	169	3%
	AGRICLTRL REPAIR PTS/S	5755	100			100	67%	0%	(100)	-100%
	SCBA REPAIR PTS/SPL	5756	9,854		2,704	7,150	67%	27%	(5,798)	-59%
	MINOR COMPUTER EQUIP.	5800	2,700		74	2,626	67%	3%	(2,588)	-96%
	OTHER REPAIR/MAINT. SP	5990	300			300	67%	0%	(300)	-100%
	REPR SPLY-8/29/05 STOR	5995								
---			---	---	---	---	---	---	---	---
4,825	**REPAIR & MAINTENANCE**		**100,454**	**2,678**	**43,928**	**53,848**	**67%**	**44%**	**(34,562)**	**-34%**
---			---	---	---	---	---	---	---	---
13,774	**SUPPLIES AND EXPENSES**		**349,855**	**6,889**	**171,405**	**171,561**	**67%**	**49%**	**(92,747)**	**-27%**

			CITY OF HATTIESBURG							
	001160 - GENERAL FUND-FIRE DIVISION		EXPENDITURE REPORT							
			8 Months Ending 05/31/13							
THIS MONTH			ANNUAL	OPEN PO	YTD	REMAINING	PERCENT		....PROJECTED....	
ACTUAL		OBJ/SUB	BUDGET	& CONTRACTS	ACTUAL	BALANCE	PLAN	ACTUAL	OVER/UNDER	%
	_____									
	PROFESSIONAL SERVICES									
	APPRAISAL	6017								
24,917	MEDICAL	6027	35,950		26,719	9,231	67%	74%	4,128	11%
	ENTERTAINMENT	6033								
50	OTHER PROFESSIONAL SER	6049	12,000		2,158	9,842	67%	18%	(8,762)	-73%
----------			---------	---------	---------	---------	-----	-----	--------	-----
24,967	**PROFESSIONAL SERVICE**		**47,950**		**28,877**	**19,073**	**67%**	**60%**	**(4,634)**	**-10%**
	COMMUNICATIONS									
590	TELEPHONE AND TELEGRAP	6060	6,600		5,495	1,105	67%	83%	1,642	25%
	NETWORK	6068								
	NETWORK WIRELESS-GRANT	6069								
	POSTAGE	6070	50			50	67%	0%	(50)	-100%
----------			---------	---------	---------	---------	-----	-----	--------	-----
590	**COMMUNICATIONS**		**6,650**		**5,495**	**1,155**	**67%**	**83%**	**1,592**	**24%**
	TRANSPORTATION									
280	TRAVEL EXPENSE	6110	10,000		1,626	8,374	67%	16%	(7,560)	-76%
	FREIGHT	6120	150		92	58	67%	61%	(12)	-8%
	MESSENGER/EXPRESS SERV	6130								
----------			---------	---------	---------	---------	-----	-----	--------	-----
280	**TRANSPORTATION**		**10,150**		**1,718**	**8,432**	**67%**	**17%**	**(7,572)**	**-75%**
	ADVERTISING									
	ADVERTISING	6150	3,847		1,710	2,137	67%	44%	(1,281)	-33%
----------			---------	---------	---------	---------	-----	-----	--------	-----
	ADVERTISING		**3,847**		**1,710**	**2,137**	**67%**	**44%**	**(1,281)**	**-33%**
	PRINTING AND BINDING									
	PRINTING	6200	1,070		940	130	67%	88%	340	32%
	FILM PROCESSING	6240								
----------			---------	---------	---------	---------	-----	-----	--------	-----
	PRINTING AND BINDING		**1,070**		**940**	**130**	**67%**	**88%**	**340**	**32%**
	INSURANCE									
	PUBLIC LIAB/PROPERTY D	6255								
	BOILER MACHINERY	6260								
	AUTOMOBILE INSURANCE	6265								
	SURETY AND FORGERY BON	6270	50			50	67%	0%	(50)	-100%
	OTHER INSURANCE	6299								
----------			---------	---------	---------	---------	-----	-----	--------	-----

			CITY OF HATTIESBURG							
	001160 - GENERAL FUND-FIRE DIVISION		EXPENDITURE REPORT							
			8 Months Ending 05/31/13							
THIS MONTH			ANNUAL	OPEN PO	YTD	REMAINING	PERCENT		....PROJECTED....	
ACTUAL		OBJ/SUB	BUDGET	& CONTRACTS	ACTUAL	BALANCE	PLAN	ACTUAL	OVER/UNDER	%
	INSURANCE		**50**			**50**	**67%**	**0%**	**(50)**	**-100%**
	UTILITIES									
886	GAS	6300	19,000		16,678	2,322	67%	88%	6,017	32%
5,435	ELECTRICITY	6305	70,000		41,255	28,745	67%	59%	(8,117)	-12%
23	WATER	6315	325		176	149	67%	54%	(61)	-19%
---			---	---	---	---	---	---	---	---
6,344	**UTILITIES**		**89,325**		**58,109**	**31,216**	**67%**	**65%**	**(2,161)**	**-2%**
	REPR/MAINT-OUTSIDE LABO									
2,550	BUILDING R&M	6350	64,188	536	47,607	16,045	67%	74%	7,222	11%
	8/29/05 STORM REPAIRS	6353								
	ELECTRICAL R&M	6355	200			200	67%	0%	(200)	-100%
	PLUMBING EQUIPMENT R&M	6357	1,600		373	1,227	67%	23%	(1,040)	-65%
	STREETS & STRUCTURES R	6360								
201	OFFICE EQUIPMENT R&M	6365	2,870		1,776	1,094	67%	62%	(206)	-7%
	HOUSEHOLD EQUIPMENT R&	6370	2,400		1,445	955	67%	60%	(232)	-10%
295	FIXED EQUIPMENT R&M	6380	725		495	230	67%	68%	17	2%
	MINOR EQUIPMENT R&M	6382	1,000		385	615	67%	39%	(422)	-42%
1,629	MOTOR VEHICLE EQ. R&M	6384	50,000	338	38,745	10,917	67%	77%	8,117	16%
87	AGRICULTURAL EQ. R&M	6387	500	136	87	277	67%	17%	(369)	-74%
	SCBA EQUIP. R&M	6389	9,300		7,418	1,883	67%	80%	1,827	20%
	COMMUNICATION EQ. R&M	6390	5,800		4,766	1,034	67%	82%	1,349	23%
432	DISINFECT./EXTERMINATI	6394	2,000		1,476	524	67%	74%	214	11%
	SIGN PAINTING	6396								
450	TOW IN CHARGES	6398	1,150		675	475	67%	59%	(137)	-12%
15	OTHER REPAIRS AND MAIN	6399	4,430		3,420	1,011	67%	77%	700	16%
---			---	---	---	---	---	---	---	---
5,658	**REPR/MAINT-OUTSIDE L**		**146,163**	**1,010**	**108,668**	**36,485**	**67%**	**74%**	**16,839**	**12%**
	RENTALS									
	OFFICE EQUIPMENT RENT	6410	200			200	67%	0%	(200)	-100%
	MACHINERY RENT	6420	890			890	67%	0%	(890)	-100%
431	CYLINDER RENT	6425	2,600		2,075	525	67%	80%	512	20%
	UNIFORM RENT	6430								
	MOP-MAT-RAG RENT	6435								
	OTHER RENT	6449								
---			---	---	---	---	---	---	---	---
431	**RENTALS**		**3,690**		**2,075**	**1,615**	**67%**	**56%**	**(577)**	**-16%**
	OTHER SERVICES & CHARGE									

			CITY OF HATTIESBURG							
	001160 - GENERAL FUND-FIRE DIVISION		EXPENDITURE REPORT							
			8 Months Ending 05/31/13							
THIS MONTH			ANNUAL	OPEN PO	YTD	REMAINING	PERCENT		....PROJECTED....	
ACTUAL		OBJ/SUB	BUDGET	& CONTRACTS	ACTUAL	BALANCE	PLAN	ACTUAL	OVER/UNDER	%
150	DUES AND MEMBERSHIPS	6840	1,450		1,175	275	67%	81%	312	22%
55	REGISTRATION FEE/TUITI	6845	1,000		808	192	67%	81%	212	21%
	LAUNDRY	6850	100			100	67%	0%	(100)	-100%
	SERVICES NOT SPECIFIED	6999	3,250			3,250	67%	0%	(3,250)	-100%
---			---	---	---	---	---	---	---	---
205	**OTHER SERVICES & CHA**		**5,800**		**1,983**	**3,817**	**67%**	**34%**	**(2,825)**	**-49%**
---			---	---	---	---	---	---	---	---
38,475	**OTHER SERVICES & CHAR**		**314,695**	**1,010**	**209,575**	**104,109**	**67%**	**67%**	**(332)**	**0%**
	BUILDING/BLD IMPROVEMEN									
	BUILDINGS	7100								
	FIRE STATION-PW8294	7100 20								
	FIRE STATION-CDBG	7100 21								
	STORAGE BUILDING	7100 23	4,000		2,394	1,606	67%	60%	(408)	-10%
---			---	---	---	---	---	---	---	---
	BUILDINGS		**4,000**		**2,394**	**1,606**	**67%**	**60%**	**(408)**	**-10%**
---			---	---	---	---	---	---	---	---
	BUILDING/BLD IMPROVE		**4,000**		**2,394**	**1,606**	**67%**	**60%**	**(408)**	**-10%**
	IMPROVEMENT OTHER THAN									
	PARKING LOT/DRIVEWAY	7227	13,000			13,000	67%	0%	(13,000)	-100%
	LANDSCAPING	7250								
	OTHER IMPROVEMENTS	7295								
---			---	---	---	---	---	---	---	---
	IMPROVEMENT OTHER TH		**13,000**			**13,000**	**67%**	**0%**	**(13,000)**	**-100%**
	MACHINERY AND EQUIPMENT									
	8/29/05 STORM EQUIP	7302								
	LABORATORY	7310								
	FIRE FIGHTING	7315								
	EQUIP-SCBA-'11 AF GRAN	7317								
	HOUSEHOLD FURN/EQUIP.	7320	2,000			2,000	67%	0%	(2,000)	-100%
	OFFICE FURN/EQUIP.	7325								
	DATA PROCESSING EQUIP.	7327								
	EQ-WIRELESS NETWORK GR	7331								
	AGRICULTURAL EQUIPMENT	7335	4,000		1,334	2,666	67%	33%	(1,998)	-50%
	COMMUNICATION EQUIPMEN	7355								
	TRAFFIC CONTROL EQUIP.	7360								
	HYDRANTS & METERS	7365								

			CITY OF HATTIESBURG							
	001160 - GENERAL FUND-FIRE DIVISION		EXPENDITURE REPORT							
			8 Months Ending 05/31/13							
THIS MONTH			ANNUAL	OPEN PO	YTD	REMAINING	PERCENT		....PROJECTED....	
ACTUAL		OBJ/SUB	BUDGET	& CONTRACTS	ACTUAL	BALANCE	PLAN	ACTUAL	OVER/UNDER	%
	OTHER EQUIPMENT	7399								
---			---	---	---	---	---	---	---	---
	MACHINERY AND EQUIPM		**6,000**		**1,334**	**4,666**	**67%**	**22%**	**(3,998)**	**-67%**
	VEHICLES									
	AUTOMOBILES	7400								
	PICK UP TRUCKS	7420								
	HEAVY TRUCKS	7430								
---			---	---	---	---	---	---	---	---
	VEHICLES									
---			---	---	---	---	---	---	---	---
	CAPITAL OUTLAY		**23,000**		**3,728**	**19,272**	**67%**	**16%**	**(17,408)**	**-76%**
---			---	---	---	---	---	---	---	---
818,527	**EXPENDITURES**		**7,294,138**	**7,899**	**4,779,213**	**2,507,026**	**67%**	**66%**	**(125,318)**	**-2%**

			CITY OF HATTIESBURG							
	001180 - GENERAL FUND-LAND DEVEL.ADM.		EXPENDITURE REPORT							
			8 Months Ending 05/31/13							
THIS MONTH			ANNUAL	OPEN PO	YTD	REMAINING	PERCENT		....PROJECTED....	
ACTUAL		OBJ/SUB	BUDGET	& CONTRACTS	ACTUAL	BALANCE	PLAN	ACTUAL	OVER/UNDER	%
	SALARIES									
39,484	REGULAR WAGES	4000	377,159		257,374	119,785	67%	68%	8,902	2%
	DISASTER RECOVERY WAGE	4010			578	(578)			867	
	OVERTIME	4300			653	(653)			979	
	DISASTER RECOVERY OVER	4310								
39,484	**SALARIES**		**377,159**		**258,605**	**118,554**	**67%**	**69%**	**10,748**	**3%**
	EMPLOYEE BENEFITS									
5,630	STATE RETIREMENT	4600	53,795		36,877	16,918	67%	69%	1,520	3%
2,973	F.I.C.A. TAXES	4700	28,860		19,364	9,496	67%	67%	186	1%
7,700	HOSPITALIZATION INS.	4800	73,080		44,172	28,908	67%	60%	(6,822)	-9%
	UNEMPLOYMENT BENEFITS	4900	4,800			4,800	67%	0%	(4,800)	-100%
	WORKMAN'S COMPENSATION	4910	5,000			5,000	67%	0%	(5,000)	-100%
16,303	**EMPLOYEE BENEFITS**		**165,535**		**100,413**	**65,122**	**67%**	**61%**	**(14,915)**	**-9%**
55,787	**PERSONAL SERVICES**		**542,694**		**359,018**	**183,676**	**67%**	**66%**	**(4,166)**	**-1%**
	OFFICE SUPPLIES									
	PAPER	5003	2,472		1,405	1,067	67%	57%	(364)	-15%
	PRINTED FORMS	5005	1,200		394	806	67%	33%	(608)	-51%
(16)	OTHER EXPENDABLE OFF.S	5010	1,400		1,384	16	67%	99%	676	48%
	MINOR OFFICE EQUIP/FUR	5020	1,700		370	1,330	67%	22%	(1,144)	-67%
	PHOTO SUPPLIES	5040	500		216	284	67%	43%	(176)	-35%
	SUBSCRIPTIONS,MAGS,MAP	5050	500			500	67%	0%	(500)	-100%
	BOOKS	5070	1,200		824	376	67%	69%	36	3%
	COMPUTER SUPPLIES	5080	5,497		5,424	73	67%	99%	2,639	48%
(16)	**OFFICE SUPPLIES**		**14,469**		**10,018**	**4,451**	**67%**	**69%**	**558**	**4%**
	OPERATING SUPPLIES									
	FOOD	5115	450			450	67%	0%	(450)	-100%
44	GAS AND OIL	5250	11,300		8,112	3,188	67%	72%	868	8%
	LUBRICANTS	5255								
	WEARING APPAREL	5355	550		234	316	67%	43%	(198)	-36%
	MINOR EQUIPMENT	5460	100			100	67%	0%	(100)	-100%

			CITY OF HATTIESBURG							
	001180 - GENERAL FUND-LAND DEVEL.ADM.		EXPENDITURE REPORT							
			8 Months Ending 05/31/13							
THIS MONTH			ANNUAL	OPEN PO	YTD	REMAINING	PERCENT		....PROJECTED....	
ACTUAL		OBJ/SUB	BUDGET	& CONTRACTS	ACTUAL	BALANCE	PLAN	ACTUAL	OVER/UNDER	%
	OTHER OPERATING MATL/S	5590								
44	**OPERATING SUPPLIES**		**12,400**		**8,346**	**4,054**	**67%**	**67%**	**119**	**1%**
	REPAIR & MAINTENANCE SP									
	BUILDING MATERIALS & S	5600	100			100	67%	0%	(100)	-100%
	PAINT AND PAINTING SPL	5650								
	MTR VEHICLE REP. PTS/S	5700	4,600	814	2,913	873	67%	63%	(230)	-5%
	COMMUNICATION REPAIR P	5750	500		289	212	67%	58%	(66)	-13%
	REPAIR & MAINTENANCE		**5,200**	**814**	**3,201**	**1,185**	**67%**	**62%**	**(398)**	**-8%**
29	**SUPPLIES AND EXPENSES**		**32,069**	**814**	**21,565**	**9,690**	**67%**	**67%**	**278**	**1%**
	PROFESSIONAL SERVICES									
	DEMOLITION	6013								
75	ASBESTOS REMOVAL	6014	11,000	100	5,313	5,587	67%	48%	(3,030)	-28%
3,500	TITLE OPINIONS	6016	16,150		6,550	9,600	67%	41%	(6,324)	-39%
	LOT CLEARING	6018								
	MEDICAL	6027								
	OTHER PROFESSIONAL SER	6049	3,000		1,146	1,854	67%	38%	(1,280)	-43%
3,575	**PROFESSIONAL SERVICE**		**30,150**	**100**	**13,009**	**17,041**	**67%**	**43%**	**(10,636)**	**-35%**
	COMMUNICATIONS									
259	TELEPHONE AND TELEGRAP	6060	4,775		1,889	2,886	67%	40%	(1,941)	-41%
	POSTAGE	6070	500			500	67%	0%	(500)	-100%
259	**COMMUNICATIONS**		**5,275**		**1,889**	**3,386**	**67%**	**36%**	**(2,441)**	**-46%**
	TRANSPORTATION									
621	TRAVEL EXPENSE	6110	5,500		1,973	3,527	67%	36%	(2,540)	-46%
	FREIGHT	6120								
	MESSENGER/EXPRESS SERV	6130								
621	**TRANSPORTATION**		**5,500**		**1,973**	**3,527**	**67%**	**36%**	**(2,540)**	**-46%**
	ADVERTISING									
	ADVERTISING	6150								
	ADVERTISING									

			CITY OF HATTIESBURG							
	001180 - GENERAL FUND-LAND DEVEL.ADM.		EXPENDITURE REPORT							
			8 Months Ending 05/31/13							
THIS MONTH			ANNUAL	OPEN PO	YTD	REMAINING	PERCENT		....PROJECTED....	
ACTUAL		OBJ/SUB	BUDGET	& CONTRACTS	ACTUAL	BALANCE	PLAN	ACTUAL	OVER/UNDER	%
	PRINTING AND BINDING									
	PRINTING	6200								
	FILM PROCESSING	6240								
---			---	---	---	---	---	---	---	---
	PRINTING AND BINDING									
	INSURANCE									
	AUTOMOBILE INSURANCE	6265								
	SURETY AND FORGERY BON	6270								
---			---	---	---	---	---	---	---	---
	INSURANCE									
	REPR/MAINT-OUTSIDE LABO									
	OFFICE EQUIPMENT R&M	6365	1,100			1,100	67%	0%	(1,100)	-100%
212	MOTOR VEHICLE EQ. R&M	6384	9,197		2,493	6,704	67%	27%	(5,457)	-59%
	COMMUNICATION EQ. R&M	6390	600			600	67%	0%	(600)	-100%
	CLEANING AND PAINTING	6392								
	SIGN PAINTING	6396								
75	TOW IN CHARGES	6398	500		150	350	67%	30%	(274)	-55%
---			---	---	---	---	---	---	---	---
287	**REPR/MAINT-OUTSIDE L**		**11,397**		**2,643**	**8,754**	**67%**	**23%**	**(7,432)**	**-65%**
	RENTALS									
	OTHER RENT	6449								
---			---	---	---	---	---	---	---	---
	RENTALS									
	OTHER SERVICES & CHARGE									
300	DUES AND MEMBERSHIPS	6840	2,400		1,769	631	67%	74%	253	11%
195	REGISTRATION FEE/TUITI	6845	3,000		1,158	1,842	67%	39%	(1,262)	-42%
---			---	---	---	---	---	---	---	---
495	**OTHER SERVICES & CHA**		**5,400**		**2,927**	**2,473**	**67%**	**54%**	**(1,009)**	**-19%**
---			---	---	---	---	---	---	---	---
5,237	**OTHER SERVICES & CHAR**		**57,722**	**100**	**22,440**	**35,182**	**67%**	**39%**	**(24,062)**	**-42%**
	MACHINERY AND EQUIPMENT									
	OFFICE FURN/EQUIP.	7325								
	DATA PROCESSING EQUIP.	7327								
	COMMUNICATION EQUIPMEN	7355								
---			---	---	---	---	---	---	---	---
	MACHINERY AND EQUIPM									

			CITY OF HATTIESBURG							
	001180 - GENERAL FUND-LAND DEVEL.ADM.		EXPENDITURE REPORT							
			8 Months Ending 05/31/13							
THIS MONTH			ANNUAL	OPEN PO	YTD	REMAINING	PERCENT		....PROJECTED....	
ACTUAL		OBJ/SUB	BUDGET	& CONTRACTS	ACTUAL	BALANCE	PLAN	ACTUAL	OVER/UNDER	%
	VEHICLES									
	AUTOMOBILES	7400	42,000	35,084		6,916	67%	0%	(42,000)	-100%
	PICK UP TRUCKS	7420								
---			---	---	---	---	---	---	---	---
	VEHICLES		**42,000**	**35,084**		**6,916**	**67%**	**0%**	**(42,000)**	**-100%**
---			---	---	---	---	---	---	---	---
	CAPITAL OUTLAY		**42,000**	**35,084**		**6,916**	**67%**	**0%**	**(42,000)**	**-100%**
---			---	---	---	---	---	---	---	---
61,053	**EXPENDITURES**		**674,485**	**35,998**	**403,023**	**235,464**	**67%**	**60%**	**(69,950)**	**-10%**

			CITY OF HATTIESBURG							
	001190 - GENERAL FUND-P/S CONTRAC.SER		EXPENDITURE REPORT							
			8 Months Ending 05/31/13							
THIS MONTH			ANNUAL	OPEN PO	YTD	REMAINING	PERCENT		....PROJECTED....	
ACTUAL		OBJ/SUB	BUDGET	& CONTRACTS	ACTUAL	BALANCE	PLAN	ACTUAL	OVER/UNDER	%
	SALARIES									
	REGULAR WAGES	4000								
16,574	OVERTIME	4300	150,000		111,171	38,829	67%	74%	16,756	11%
16,574	**SALARIES**		**150,000**		**111,171**	**38,829**	**67%**	**74%**	**16,756**	**11%**
	EMPLOYEE BENEFITS									
2,363	STATE RETIREMENT	4600	21,340		15,849	5,491	67%	74%	2,433	11%
1,233	F.I.C.A. TAXES	4700	11,475		8,202	3,273	67%	71%	828	7%
1,131	HOSPITALIZATION INS.	4800	4,455		9,627	(5,172)	67%	216%	9,985	224%
4,728	**EMPLOYEE BENEFITS**		**37,270**		**33,677**	**3,593**	**67%**	**90%**	**13,245**	**36%**
21,302	**PERSONAL SERVICES**		**187,270**		**144,848**	**42,422**	**67%**	**77%**	**30,002**	**16%**
	PROFESSIONAL SERVICES									
13,898	MEDICAL	6027	191,000		149,673	41,327	67%	78%	33,509	18%
	OTHER PROF.-JAIL DIV G	6048								
13,898	**PROFESSIONAL SERVICE**		**191,000**		**149,673**	**41,327**	**67%**	**78%**	**33,509**	**18%**
	OTHER SERVICES & CHARGE									
96,335	JAIL EXPENSE	6815	1,359,000		1,111,801	247,199	67%	82%	308,701	23%
	DISTRICT ATT'Y SUBSIDY	6816								
	JAIL IMPR-CITY SHARE	6826								
	AMBULANCE SERV.CONTRIB	6860								
	EMERGENCY MGMT.CONTRIB	6865	342,000		291,500	50,500	67%	85%	95,250	28%
	USM CITIZEN CORPS COUN	6866								
	USM TITLE V CONTRACT	6867								
	JUVENILLE ACCT.INCENTI	6868	11,379		11,379		67%	100%	5,689	50%
	METH GRANT CONTRACT	6869								
	SERVICES NOT SPECIFIED	6999								
96,335	**OTHER SERVICES & CHA**		**1,712,379**		**1,414,680**	**297,699**	**67%**	**83%**	**409,641**	**24%**
110,233	**OTHER SERVICES & CHAR**		**1,903,379**		**1,564,352**	**339,027**	**67%**	**82%**	**443,149**	**23%**

			CITY OF HATTIESBURG							
	001190 - GENERAL FUND-P/S CONTRAC.SER		EXPENDITURE REPORT							
			8 Months Ending 05/31/13							
THIS MONTH			ANNUAL	OPEN PO	YTD	REMAINING	PERCENT		....PROJECTED....	
ACTUAL		OBJ/SUB	BUDGET	& CONTRACTS	ACTUAL	BALANCE	PLAN	ACTUAL	OVER/UNDER	%
	VEHICLES									
	AUTOMOBILES	7400								
----------			---------	---------	---------	---------	-----	-----	--------	-----
	VEHICLES									
----------			---------	---------	---------	---------	-----	-----	--------	-----
	CAPITAL OUTLAY									
----------			---------	---------	---------	---------	-----	-----	--------	-----
131,534	**EXPENDITURES**		**2,090,649**		**1,709,201**	**381,448**	**67%**	**82%**	**473,152**	**23%**

			CITY OF HATTIESBURG							
	001191 - GENERAL FUND-TRAFFIC MAINT.		EXPENDITURE REPORT							
			8 Months Ending 05/31/13							
THIS MONTH			ANNUAL	OPEN PO	YTD	REMAINING	PERCENT		....PROJECTED....	
ACTUAL		OBJ/SUB	BUDGET	& CONTRACTS	ACTUAL	BALANCE	PLAN	ACTUAL	OVER/UNDER	%
	_____									
	_____									
	SALARIES									
21,372	REGULAR WAGES	4000	236,975		135,110	101,865	67%	57%	(34,309)	-14%
	DISASTER RECOVERY WAGE	4010			4,549	(4,549)			6,823	
944	OVERTIME	4300	10,000		8,854	1,146	67%	89%	3,281	33%
	DISASTER RECOVERY OVER	4310								
---			---	---	---	---	---	---	---	---
22,316	**SALARIES**		**246,975**		**148,513**	**98,462**	**67%**	**60%**	**(24,205)**	**-10%**
	EMPLOYEE BENEFITS									
3,182	STATE RETIREMENT	4600	35,230		21,178	14,052	67%	60%	(3,462)	-10%
1,678	F.I.C.A. TAXES	4700	18,900		11,077	7,823	67%	59%	(2,284)	-12%
5,092	HOSPITALIZATION INS.	4800	46,980		26,432	20,548	67%	56%	(7,332)	-16%
	UNEMPLOYMENT BENEFITS	4900								
	WORKMAN'S COMPENSATION	4910	12,875			12,875	67%	0%	(12,875)	-100%
---			---	---	---	---	---	---	---	---
9,952	**EMPLOYEE BENEFITS**		**113,985**		**58,687**	**55,298**	**67%**	**51%**	**(25,954)**	**-23%**
---			---	---	---	---	---	---	---	---
32,268	**PERSONAL SERVICES**		**360,960**		**207,200**	**153,760**	**67%**	**57%**	**(50,160)**	**-14%**
	_____									
	OFFICE SUPPLIES									
	PAPER	5003								
	PRINTED FORMS	5005								
(22)	OTHER EXPENDABLE OFF.S	5010	1,015		978	37	67%	96%	452	45%
	MINOR OFFICE EQUIP/FUR	5020	1,033		1,013	21	67%	98%	486	47%
	PHOTO SUPPLIES	5040								
	SUBSCRIPTIONS,MAGS,MAP	5050								
	BOOKS	5070	285		285		67%	100%	142	50%
	COMPUTER SUPPLIES	5080	682		615	67	67%	90%	240	35%
---			---	---	---	---	---	---	---	---
(22)	**OFFICE SUPPLIES**		**3,015**		**2,890**	**125**	**67%**	**96%**	**1,320**	**44%**
	OPERATING SUPPLIES									
	CLEANING/JANITORIAL SP	5100	150			150	67%	0%	(150)	-100%
	HOUSEHOLD SUPPLIES	5110	1,350		763	587	67%	57%	(205)	-15%
	FOOD	5115								
	MEDICAL SUPPLIES	5120	50			50	67%	0%	(50)	-100%
	CHEMICALS	5130	600			600	67%	0%	(600)	-100%

			CITY OF HATTIESBURG							
	001191 - GENERAL FUND-TRAFFIC MAINT.		EXPENDITURE REPORT							
			8 Months Ending 05/31/13							
THIS MONTH			ANNUAL	OPEN PO	YTD	REMAINING	PERCENT		....PROJECTED....	
ACTUAL		OBJ/SUB	BUDGET	& CONTRACTS	ACTUAL	BALANCE	PLAN	ACTUAL	OVER/UNDER	%
	GAS AND OIL	5250	28,000		12,721	15,279	67%	45%	(8,918)	-32%
	LUBRICANTS	5255	100			100	67%	0%	(100)	-100%
	DIESEL FUEL	5257	2,000		997	1,003	67%	50%	(504)	-25%
	WEARING APPAREL	5355	600	59		541	67%	0%	(600)	-100%
	ASPHALT & ASPHALT PROD	5400								
	CONCRETE, CEMENT, ETC.	5405	1,200		444	756	67%	37%	(534)	-45%
	SAND,CLAY,GRVL,FILL DI	5415								
	HORT./LANDSCAPING SPLY	5440								
145	HAND TOOLS	5450	2,300		1,029	1,271	67%	45%	(756)	-33%
	MINOR EQUIPMENT	5460	8,800		2,331	6,469	67%	26%	(5,303)	-60%
	TRAFFIC CONTROL EQ. SP	5540	114,099	48,122	29,299	36,678	67%	26%	(70,150)	-61%
72	TRAFFIC SIGNS	5545	31,200	848	13,490	16,862	67%	43%	(10,964)	-35%
	STREET MARKING SUPPLIE	5550	2,400		1,611	789	67%	67%	16	1%
64	OTHER OPERATING MATL/S	5590	350		256	94	67%	73%	34	10%
---			---	---	---	---	---	---	---	---
281	**OPERATING SUPPLIES**		**193,199**	**49,029**	**62,943**	**81,227**	**67%**	**33%**	**(98,784)**	**-51%**
	REPAIR & MAINTENANCE SP									
	BUILDING MATERIALS & S	5600	2,500		1,421	1,079	67%	57%	(368)	-15%
3	ELECTRICAL SUPPLIES	5605	3,000		898	2,102	67%	30%	(1,652)	-55%
	STRUCTURAL STEEL & IRO	5620	1,000			1,000	67%	0%	(1,000)	-100%
405	PAINT AND PAINTING SPL	5650	7,880		3,218	4,662	67%	41%	(3,052)	-39%
364	MTR VEHICLE REP. PTS/S	5700	4,000		3,967	33	67%	99%	1,950	49%
	COMMUNICATION REPAIR P	5750	1,000			1,000	67%	0%	(1,000)	-100%
	OTHER REPAIR/MAINT. SP	5990	6,900	6,101		799	67%	0%	(6,900)	-100%
---			---	---	---	---	---	---	---	---
772	**REPAIR & MAINTENANCE**		**26,280**	**6,101**	**9,504**	**10,675**	**67%**	**36%**	**(12,024)**	**-46%**
---			---	---	---	---	---	---	---	---
1,031	**SUPPLIES AND EXPENSES**		**222,494**	**55,130**	**75,337**	**92,027**	**67%**	**34%**	**(109,488)**	**-49%**
	PROFESSIONAL SERVICES									
	MEDICAL	6027								
---			---	---	---	---	---	---	---	---
	PROFESSIONAL SERVICE									
	COMMUNICATIONS									
50	TELEPHONE AND TELEGRAP	6060	1,000		588	412	67%	59%	(118)	-12%
	POSTAGE	6070								
---			---	---	---	---	---	---	---	---

			CITY OF HATTIESBURG							
	001191 - GENERAL FUND-TRAFFIC MAINT.		EXPENDITURE REPORT							
			8 Months Ending 05/31/13							
THIS MONTH			ANNUAL	OPEN PO	YTD	REMAINING	PERCENT		....PROJECTED....	
ACTUAL		OBJ/SUB	BUDGET	& CONTRACTS	ACTUAL	BALANCE	PLAN	ACTUAL	OVER/UNDER	%
50	**COMMUNICATIONS**		**1,000**		**588**	**412**	**67%**	**59%**	**(118)**	**-12%**
	TRANSPORTATION									
	TRAVEL EXPENSE	6110	2,042			2,042	67%	0%	(2,042)	-100%
	FREIGHT	6120	150		85	65	67%	57%	(22)	-15%
	MESSENGER/EXPRESS SERV	6130								
---			---	---	---	---	---	---	---	---
	TRANSPORTATION		**2,192**		**85**	**2,107**	**67%**	**4%**	**(2,064)**	**-94%**
	ADVERTISING									
	ADVERTISING	6150								
---			---	---	---	---	---	---	---	---
	ADVERTISING									
	INSURANCE									
	PUBLIC LIAB/PROPERTY D	6255								
	AUTOMOBILE INSURANCE	6265								
	SURETY AND FORGERY BON	6270								
---			---	---	---	---	---	---	---	---
	INSURANCE									
	UTILITIES									
20	GAS	6300	2,000		1,203	797	67%	60%	(195)	-10%
1,067	ELECTRICITY	6305	14,000		8,351	5,649	67%	60%	(1,473)	-11%
	TRAFFIC LIGHT ELECTRIC	6310								
---			---	---	---	---	---	---	---	---
1,088	**UTILITIES**		**16,000**		**9,554**	**6,446**	**67%**	**60%**	**(1,668)**	**-10%**
	REPR/MAINT-OUTSIDE LABO									
	BUILDING R&M	6350								
	STREETS & STRUCTURES R	6360	35			35	67%	0%	(35)	-100%
	OFFICE EQUIPMENT R&M	6365	500		441	59	67%	88%	161	32%
	TRAFFIC CONTROL EQ. R&	6375	135,500	44,550	43,329	47,621	67%	32%	(70,506)	-52%
	FIXED EQUIPMENT R&M	6380								
	MINOR EQUIPMENT R&M	6382	150		99	51	67%	66%	(1)	-1%
	MOTOR VEHICLE EQ. R&M	6384	16,850		8,969	7,881	67%	53%	(3,396)	-20%
	COMMUNICATION EQ. R&M	6390	550			550	67%	0%	(550)	-100%
54	DISINFECT./EXTERMINATI	6394	614		162	452	67%	26%	(370)	-60%
	SIGN PAINTING	6396	150			150	67%	0%	(150)	-100%
	TOW IN CHARGES	6398	200			200	67%	0%	(200)	-100%
	OTHER REPAIRS AND MAIN	6399	51			51	67%	0%	(51)	-100%
---			---	---	---	---	---	---	---	---

			CITY OF HATTIESBURG							
	001191 - GENERAL FUND-TRAFFIC MAINT.		EXPENDITURE REPORT							
			8 Months Ending 05/31/13							
THIS MONTH			ANNUAL	OPEN PO	YTD	REMAINING	PERCENT		....PROJECTED....	
ACTUAL		OBJ/SUB	BUDGET	& CONTRACTS	ACTUAL	BALANCE	PLAN	ACTUAL	OVER/UNDER	%
54	**REPR/MAINT-OUTSIDE L**		**154,600**	**44,550**	**53,000**	**57,050**	**67%**	**34%**	**(75,100)**	**-49%**
	RENTALS									
	MACHINERY RENT	6420								
	CYLINDER RENT	6425								
90	UNIFORM RENT	6430	950		810	140	67%	85%	265	28%
	MOP-MAT-RAG RENT	6435								
	OTHER RENT	6449	750			750	67%	0%	(750)	-100%
---			---	---	---	---	---	---	---	---
90	**RENTALS**		**1,700**		**810**	**890**	**67%**	**48%**	**(484)**	**-28%**
	OTHER SERVICES & CHARGE									
	DUES AND MEMBERSHIPS	6840	1,000		415	585	67%	42%	(377)	-38%
	REGISTRATION FEE/TUITI	6845	3,000		1,667	1,333	67%	56%	(499)	-17%
	LAUNDRY	6850								
250	SERVICES NOT SPECIFIED	6999	9,600		2,000	7,600	67%	21%	(6,600)	-69%
---			---	---	---	---	---	---	---	---
250	**OTHER SERVICES & CHA**		**13,600**		**4,082**	**9,518**	**67%**	**30%**	**(7,476)**	**-55%**
---			---	---	---	---	---	---	---	---
1,531	**OTHER SERVICES & CHAR**		**189,092**	**44,550**	**68,120**	**76,422**	**67%**	**36%**	**(86,912)**	**-46%**
	_____									
	BUILDING/BLD IMPROVEMEN									
	BUILDING IMPROVEMENTS	7150								
	RENOVATE WALNUT ST.BL	7150 22								
	TRAFFIC SHOP IMPROVEM	7150 32								
---			---	---	---	---	---	---	---	---
	BUILDING IMPROVEMEN									
---			---	---	---	---	---	---	---	---
	BUILDING/BLD IMPROVE									
	MACHINERY AND EQUIPMENT									
	HOUSEHOLD FURN/EQUIP.	7320								
	OFFICE FURN/EQUIP.	7325								
	DATA PROCESSING EQUIP.	7327	3,500			3,500	67%	0%	(3,500)	-100%
	COMMUNICATION EQUIPMEN	7355	3,050			3,050	67%	0%	(3,050)	-100%
	TRAFFIC CONTROL EQUIP.	7360	18,000	15,700		2,300	67%	0%	(18,000)	-100%
	OTHER EQUIPMENT	7399	13,000			13,000	67%	0%	(13,000)	-100%
---			---	---	---	---	---	---	---	---
	MACHINERY AND EQUIPM		**37,550**	**15,700**		**21,850**	**67%**	**0%**	**(37,550)**	**-100%**
	VEHICLES									

			CITY OF HATTIESBURG							
	001191 - GENERAL FUND-TRAFFIC MAINT.		EXPENDITURE REPORT							
			8 Months Ending 05/31/13							
THIS MONTH			ANNUAL	OPEN PO	YTD	REMAINING	PERCENT		....PROJECTED....	
ACTUAL		OBJ/SUB	BUDGET	& CONTRACTS	ACTUAL	BALANCE	PLAN	ACTUAL	OVER/UNDER	%
	AUTOMOBILES	7400								
	PICK UP TRUCKS	7420								
	HEAVY TRUCKS	7430								
	SPECIAL TRUCKS	7450	85,173		85,173		67%	100%	42,586	50%
---			---	---	---	---	---	---	---	---
	VEHICLES		**85,173**		**85,173**		**67%**	**100%**	**42,586**	**50%**
---			---	---	---	---	---	---	---	---
	CAPITAL OUTLAY		**122,723**	**15,700**	**85,173**	**21,850**	**67%**	**69%**	**5,036**	**4%**
---			---	---	---	---	---	---	---	---
34,831	**EXPENDITURES**		**895,269**	**115,380**	**435,830**	**344,059**	**67%**	**49%**	**(241,523)**	**-27%**

			CITY OF HATTIESBURG							
	001201 - GENERAL FUND-STREET DIV.		EXPENDITURE REPORT							
			8 Months Ending 05/31/13							
THIS MONTH			ANNUAL	OPEN PO	YTD	REMAINING	PERCENT		....PROJECTED....	
ACTUAL		OBJ/SUB	BUDGET	& CONTRACTS	ACTUAL	BALANCE	PLAN	ACTUAL	OVER/UNDER	%
	_____									
	_____									
	SALARIES									
89,281	REGULAR WAGES	4000	1,108,758		568,365	540,393	67%	51%	(256,210)	-23%
2,777	DISASTER RECOVERY WAGE	4010			18,120	(18,120)			27,180	
4,787	OVERTIME	4300	20,000		35,419	(15,419)	67%	177%	33,128	166%
	DISASTER RECOVERY OVER	4310								
---			---	---	---	---	---	---	---	---
96,846	**SALARIES**		**1,128,758**		**621,904**	**506,854**	**67%**	**55%**	**(195,902)**	**-17%**
	EMPLOYEE BENEFITS									
13,810	STATE RETIREMENT	4600	160,965		87,425	73,540	67%	54%	(29,827)	-19%
7,325	F.I.C.A. TAXES	4700	86,352		46,944	39,408	67%	54%	(15,936)	-18%
33,860	HOSPITALIZATION INS.	4800	261,000		135,138	125,862	67%	52%	(58,292)	-22%
	UNEMPLOYMENT BENEFITS	4900	2,100			2,100	67%	0%	(2,100)	-100%
	WORKMAN'S COMPENSATION	4910	50,000			50,000	67%	0%	(50,000)	-100%
---			---	---	---	---	---	---	---	---
54,995	**EMPLOYEE BENEFITS**		**560,417**		**269,506**	**290,911**	**67%**	**48%**	**(156,157)**	**-28%**
---			---	---	---	---	---	---	---	---
151,841	**PERSONAL SERVICES**		**1,689,175**		**891,410**	**797,765**	**67%**	**53%**	**(352,059)**	**-21%**
	_____									
	OFFICE SUPPLIES									
	PAPER	5003								
	PRINTED FORMS	5005								
	OTHER EXPENDABLE OFF.S	5010	200		181	19	67%	91%	71	36%
	MINOR OFFICE EQUIP/FUR	5020								
	SUBSCRIPTIONS,MAGS,MAP	5050								
---			---	---	---	---	---	---	---	---
	OFFICE SUPPLIES		**200**		**181**	**19**	**67%**	**91%**	**71**	**36%**
	OPERATING SUPPLIES									
	CLEANING/JANITORIAL SP	5100	2,000		1,353	647	67%	68%	29	1%
909	HOUSEHOLD SUPPLIES	5110	3,500	582	2,039	879	67%	58%	(441)	-13%
	FOOD	5115								
	MEDICAL SUPPLIES	5120								
	CHEMICALS	5130	1,500			1,500	67%	0%	(1,500)	-100%
6,376	GAS AND OIL	5250	72,450		51,759	20,691	67%	71%	5,188	7%
	LUBRICANTS	5255	5,000		4,773	227	67%	95%	2,159	43%
	DIESEL FUEL	5257	94,000		60,848	33,152	67%	65%	(2,728)	-3%

			CITY OF HATTIESBURG							
	001201 - GENERAL FUND-STREET DIV.		EXPENDITURE REPORT							
			8 Months Ending 05/31/13							
THIS MONTH			ANNUAL	OPEN PO	YTD	REMAINING	PERCENT		....PROJECTED....	
ACTUAL		OBJ/SUB	BUDGET	& CONTRACTS	ACTUAL	BALANCE	PLAN	ACTUAL	OVER/UNDER	%
	WEARING APPAREL	5355	2,600		647	1,953	67%	25%	(1,629)	-63%
	ASPHALT & ASPHALT PROD	5400	8,000			8,000	67%	0%	(8,000)	-100%
	CONCRETE, CEMENT, ETC.	5405	42,050	11,025	7,636	23,389	67%	18%	(30,596)	-73%
	BRICK,STONE,MORTAR,ETC	5410	8,700		2,473	6,227	67%	28%	(4,990)	-57%
2,691	SAND,CLAY,GRVL,FILL DI	5415	53,500		19,844	33,656	67%	37%	(23,734)	-44%
	DRAINAGE PIPE & CULVER	5420	12,000	3,500		8,500	67%	0%	(12,000)	-100%
	HORT./LANDSCAPING SPLY	5440	7,300		360	6,940	67%	5%	(6,760)	-93%
3,100	HAND TOOLS	5450	5,700		5,690	10	67%	100%	2,835	50%
242	MINOR EQUIPMENT	5460	7,500		7,353	147	67%	98%	3,529	47%
	STREET MARKING SUPPLIE	5550								
	OTHER OPERATING MATL/S	5590	7,500	36	7,391	72	67%	99%	3,586	48%
---			---	---	---	---	---	---	---	---
13,319	**OPERATING SUPPLIES**		**333,300**	**15,143**	**172,166**	**145,990**	**67%**	**52%**	**(75,050)**	**-23%**
	REPAIR & MAINTENANCE SP									
	BUILDING MATERIALS & S	5600	21,500		23	21,477	67%	0%	(21,465)	-100%
	ELECTRICAL SUPPLIES	5605	7,500		175	7,325	67%	2%	(7,237)	-96%
	PLUMBING SUPPLIES	5610	2,500		2,075	425	67%	83%	612	24%
	STRUCTURAL STEEL & IRO	5620	8,500		5,010	3,490	67%	59%	(984)	-12%
	PAINT AND PAINTING SPL	5650	8,700			8,700	67%	0%	(8,700)	-100%
8,457	MTR VEHICLE REP. PTS/S	5700	87,886	1,289	47,142	39,455	67%	54%	(17,172)	-20%
	COMMUNICATION REPAIR P	5750	1,000		80	920	67%	8%	(880)	-88%
	AGRICLTRL REPAIR PTS/S	5755	6,000			6,000	67%	0%	(6,000)	-100%
184	OTHER REPAIR/MAINT. SP	5990	700		277	423	67%	40%	(284)	-41%
---			---	---	---	---	---	---	---	---
8,641	**REPAIR & MAINTENANCE**		**144,286**	**1,289**	**54,783**	**88,214**	**67%**	**38%**	**(62,111)**	**-43%**
---			---	---	---	---	---	---	---	---
21,959	**SUPPLIES AND EXPENSES**		**477,786**	**16,432**	**227,131**	**234,223**	**67%**	**48%**	**(137,089)**	**-29%**
	_____									
	PROFESSIONAL SERVICES									
	LOT CLEARING	6018								
	MEDICAL	6027								
1,634	OTHER PROFESSIONAL SER	6049	45,000	4,137	21,152	19,711	67%	47%	(13,272)	-29%
---			---	---	---	---	---	---	---	---
1,634	**PROFESSIONAL SERVICE**		**45,000**	**4,137**	**21,152**	**19,711**	**67%**	**47%**	**(13,272)**	**-29%**
	TRANSPORTATION									
(268)	TRAVEL EXPENSE	6110	4,285		1,138	3,147	67%	27%	(2,577)	-60%
	FREIGHT	6120								

			CITY OF HATTIESBURG							
	001201 - GENERAL FUND-STREET DIV.		EXPENDITURE REPORT							
			8 Months Ending 05/31/13							
THIS MONTH			ANNUAL	OPEN PO	YTD	REMAINING	PERCENT		....PROJECTED....	
ACTUAL		OBJ/SUB	BUDGET	& CONTRACTS	ACTUAL	BALANCE	PLAN	ACTUAL	OVER/UNDER	%
	MESSENGER/EXPRESS SERV	6130								
---			---	---	---	---	---	---	---	---
(268)	**TRANSPORTATION**		**4,285**		**1,138**	**3,147**	**67%**	**27%**	**(2,577)**	**-60%**
	ADVERTISING									
	ADVERTISING	6150								
---			---	---	---	---	---	---	---	---
	ADVERTISING									
	PRINTING AND BINDING									
	PRINTING	6200								
---			---	---	---	---	---	---	---	---
	PRINTING AND BINDING									
	INSURANCE									
	PUBLIC LIAB/PROPERTY D	6255								
	AUTOMOBILE INSURANCE	6265								
---			---	---	---	---	---	---	---	---
	INSURANCE									
	UTILITIES									
	ELECTRICITY	6305								
---			---	---	---	---	---	---	---	---
	UTILITIES									
	REPR/MAINT-OUTSIDE LABO									
	BUILDING R&M	6350								
	ELECTRICAL R&M	6355								
	PLUMBING EQUIPMENT R&M	6357								
	STREETS & STRUCTURES R	6360								
	MISC PAVING	6360 01								
	VENETIAN WAY AREA	6360 02								
	S 27TH/O'FERRELL AREA	6360 03								
	W 4TH-COLUMBIA ST ARE	6360 04								
	MCINNIS LOOP/CAMBRIDG	6360 05								
	DABBS ST/MLK AREA	6360 06								
	S 40TH/BONHOMIE	6360 07								
	STANLEY/HWY 42 AREA	6360 08								
	PINE HILLS/SANDLEWOOD	6360 09								
	N 35TH/USM AREA	6360 10								
	S 36TH/MAMIE ST AREA	6360 11								
	S 34TH/MANDALAY AREA	6360 12								

			CITY OF HATTIESBURG							
	001201 - GENERAL FUND-STREET DIV.		EXPENDITURE REPORT							
			8 Months Ending 05/31/13							
THIS MONTH			ANNUAL	OPEN PO	YTD	REMAINING	PERCENT		....PROJECTED....	
ACTUAL		OBJ/SUB	BUDGET	& CONTRACTS	ACTUAL	BALANCE	PLAN	ACTUAL	OVER/UNDER	%
	S H'BURG/S CHANCELLOR	6360 13								
	BROAD ST/CAPITAL ST A	6360 14								
	MOBILE/BOUIE ST AREA	6360 15								
	CHALMETTE/WINDGATE	6360 16								
	HONEYSUCKLE/DOGWOOD	6360 17								
	ADELINE/S 16TH AREA	6360 18								
	DUMAS/FLORENCE ST ARE	6360 19								
	S 16TH/CORRINE ST ARE	6360 20								
	ACADEMY DR-BLC AIRPOR	6360 21								
	COTTAGES AT TURTLE CR	6360 22								
	CLASSIC DR/J ED TURNE	6360 23								
	E 5TH ST/E 6TH ST ARE	6360 24								
	HALL/ELIZABETH AVE	6360 25								
	MANDALAY/HILLENDALE	6360 26								
	ARLINGTON LOOP/S 34TH	6360 27								
	N. 31st Ave/HILLSIDE	6360 28								
	DWNTWN AREA VAR STS &	6360 29								
	LONG RANGE PAVING PLA	6360 99								
----------			---------	---------	---------	---------	-----	-----	--------	-----
	STREETS & STRUCTURE									
	FIXED EQUIPMENT R&M	6380	1,000			1,000	67%	0%	(1,000)	-100%
573	MINOR EQUIPMENT R&M	6382	1,500		1,263	237	67%	84%	394	26%
926	MOTOR VEHICLE EQ. R&M	6384	92,816	181	12,614	80,021	67%	14%	(73,894)	-80%
	AGRICULTURAL EQ. R&M	6387								
	COMMUNICATION EQ. R&M	6390								
	SIGN PAINTING	6396								
	TOW IN CHARGES	6398	1,200		881	320	67%	73%	121	10%
	OTHER REPAIRS AND MAIN	6399								
----------			---------	---------	---------	---------	-----	-----	--------	-----
1,499	**REPR/MAINT-OUTSIDE L**		**96,516**	**181**	**14,758**	**81,577**	**67%**	**15%**	**(74,378)**	**-77%**
	RENTALS									
	AUTOMOTIVE EQ. RENT	6415								
	MACHINERY RENT	6420	74,000			74,000	67%	0%	(74,000)	-100%
1,209	UNIFORM RENT	6430	5,471		5,269	202	67%	96%	2,432	44%
	OTHER RENT	6449	7,000			7,000	67%	0%	(7,000)	-100%
----------			---------	---------	---------	---------	-----	-----	--------	-----
1,209	**RENTALS**		**86,471**		**5,269**	**81,202**	**67%**	**6%**	**(78,567)**	**-91%**

			CITY OF HATTIESBURG							
	001201 - GENERAL FUND-STREET DIV.		EXPENDITURE REPORT							
			8 Months Ending 05/31/13							
THIS MONTH			ANNUAL	OPEN PO	YTD	REMAINING	PERCENT		....PROJECTED....	
ACTUAL		OBJ/SUB	BUDGET	& CONTRACTS	ACTUAL	BALANCE	PLAN	ACTUAL	OVER/UNDER	%
	OTHER SERVICES & CHARGE									
	DUES AND MEMBERSHIPS	6840								
	REGISTRATION FEE/TUITI	6845	4,500		1,028	3,472	67%	23%	(2,958)	-66%
	SERVICES NOT SPECIFIED	6999								
---			---	---	---	---	---	---	---	---
	OTHER SERVICES & CHA		**4,500**		**1,028**	**3,472**	**67%**	**23%**	**(2,958)**	**-66%**
---			---	---	---	---	---	---	---	---
4,073	**OTHER SERVICES & CHAR**		**236,772**	**4,318**	**43,344**	**189,110**	**67%**	**18%**	**(171,756)**	**-73%**
	IMPROVEMENT OTHER THAN									
	BRIDGES	7210								
	SEWERS	7220								
	IND.PARK WTR/SWR IMPR	7220 03								
---			---	---	---	---	---	---	---	---
	SEWERS									
	B/WAY, E. HARDY-SBA	7223								
	KAB/LANDSCAPING	7226								
	STREETS & ROADWAYS	7230								
	INDUSTRIAL PARK ROADS	7230 02								
	W.4TH-HWY 49 TO 38TH	7230 15								
	HARDY ST-MCLEOD TO 25	7230 16								
	OTHER STREET IMPR.	7230 99								
---			---	---	---	---	---	---	---	---
	STREETS & ROADWAYS									
	OTHER IMPROVEMENTS	7295								
---			---	---	---	---	---	---	---	---
	IMPROVEMENT OTHER TH									
	MACHINERY AND EQUIPMENT									
	HOUSEHOLD FURN/EQUIP.	7320								
	CONSTRUCTION EQUIPMENT	7345								
	COMMUNICATION EQUIPMEN	7355								
	PIPE	7370								
	OTHER EQUIPMENT	7399	10,438		10,438		67%	100%	5,219	50%
---			---	---	---	---	---	---	---	---
	MACHINERY AND EQUIPM		**10,438**		**10,438**		**67%**	**100%**	**5,219**	**50%**
	VEHICLES									
	AUTOMOBILES	7400								

			CITY OF HATTIESBURG							
	001201 - GENERAL FUND-STREET DIV.		EXPENDITURE REPORT							
			8 Months Ending 05/31/13							
THIS MONTH			ANNUAL	OPEN PO	YTD	REMAINING	PERCENT		....PROJECTED....	
ACTUAL		OBJ/SUB	BUDGET	& CONTRACTS	ACTUAL	BALANCE	PLAN	ACTUAL	OVER/UNDER	%
	PICK UP TRUCKS	7420								
	HEAVY TRUCKS	7430								
	DUMP TRUCKS	7440								
	SPECIAL TRUCKS	7450								
----------			---------	---------	---------	---------	-----	-----	--------	-----
	VEHICLES									
----------			---------	---------	---------	---------	-----	-----	--------	-----
	CAPITAL OUTLAY		**10,438**		**10,438**		**67%**	**100%**	**5,219**	**50%**
----------			---------	---------	---------	---------	-----	-----	--------	-----
177,874	**EXPENDITURES**		**2,414,171**	**20,750**	**1,172,323**	**1,221,097**	**67%**	**49%**	**(655,686)**	**-27%**

			CITY OF HATTIESBURG							
	001202 - GENERAL FUND-STREET LIGHTS		EXPENDITURE REPORT							
			8 Months Ending 05/31/13							
THIS MONTH			ANNUAL	OPEN PO	YTD	REMAINING	PERCENT		....PROJECTED....	
ACTUAL		OBJ/SUB	BUDGET	& CONTRACTS	ACTUAL	BALANCE	PLAN	ACTUAL	OVER/UNDER	%
	_____									
	_____									
	UTILITIES									
91,205	ELECTRICITY	6305	1,100,000		704,214	395,786	67%	64%	(43,678)	-4%
---			---	---	---	---	---	---	---	---
91,205	**UTILITIES**		**1,100,000**		**704,214**	**395,786**	**67%**	**64%**	**(43,678)**	**-4%**
---			---	---	---	---	---	---	---	---
91,205	**OTHER SERVICES & CHAR**		**1,100,000**		**704,214**	**395,786**	**67%**	**64%**	**(43,678)**	**-4%**
	_____									
	IMPROVEMENT OTHER THAN									
	STREET LIGHTING	7235								
---			---	---	---	---	---	---	---	---
	IMPROVEMENT OTHER TH									
---			---	---	---	---	---	---	---	---
	CAPITAL OUTLAY									
---			---	---	---	---	---	---	---	---
91,205	**EXPENDITURES**		**1,100,000**		**704,214**	**395,786**	**67%**	**64%**	**(43,678)**	**-4%**

			CITY OF HATTIESBURG							
	001203 - GENERAL FUND-ENGR/PUBLIC SER		EXPENDITURE REPORT							
			8 Months Ending 05/31/13							
THIS MONTH			ANNUAL	OPEN PO	YTD	REMAINING	PERCENT		....PROJECTED....	
ACTUAL		OBJ/SUB	BUDGET	& CONTRACTS	ACTUAL	BALANCE	PLAN	ACTUAL	OVER/UNDER	%
	SALARIES									
27,366	REGULAR WAGES	4000	237,170		163,995	73,175	67%	69%	8,822	4%
	DISASTER RECOVERY WAGE	4010			201	(201)			301	
	OVERTIME	4300			302	(302)			453	
	DISASTER RECOVERY OVER	4310								
27,366	**SALARIES**		**237,170**		**164,498**	**72,672**	**67%**	**69%**	**9,577**	**4%**
	EMPLOYEE BENEFITS									
3,902	STATE RETIREMENT	4600	33,820		23,457	10,363	67%	69%	1,365	4%
2,019	F.I.C.A. TAXES	4700	18,150		11,973	6,177	67%	66%	(190)	-1%
4,176	HOSPITALIZATION INS.	4800	36,540		20,472	16,068	67%	56%	(5,832)	-16%
	UNEMPLOYMENT BENEFITS	4900								
	WORKMAN'S COMPENSATION	4910	13,900			13,900	67%	0%	(13,900)	-100%
10,097	**EMPLOYEE BENEFITS**		**102,410**		**55,903**	**46,507**	**67%**	**55%**	**(18,555)**	**-18%**
37,463	**PERSONAL SERVICES**		**339,580**		**220,400**	**119,180**	**67%**	**65%**	**(8,980)**	**-3%**
	OFFICE SUPPLIES									
410	PAPER	5003	840		750	90	67%	89%	285	34%
	PRINTED FORMS	5005								
193	OTHER EXPENDABLE OFF.S	5010	1,733		811	922	67%	47%	(516)	-30%
	MINOR OFFICE EQUIP/FUR	5020	1,200		663	537	67%	55%	(205)	-17%
	PHOTO SUPPLIES	5040								
	SUBSCRIPTIONS,MAGS,MAP	5050	241		240	1	67%	100%	119	49%
	MAPS FOR RESALE	5060								
	BOOKS	5070	500			500	67%	0%	(500)	-100%
1,995	COMPUTER SUPPLIES	5080	4,881	1,938	2,943	1	67%	60%	(466)	-10%
2,598	**OFFICE SUPPLIES**		**9,395**	**1,938**	**5,406**	**2,051**	**67%**	**58%**	**(1,285)**	**-14%**
	OPERATING SUPPLIES									
	FOOD	5115	200		28	172	67%	14%	(158)	-79%
	MEDICAL SUPPLIES	5120								
	GAS AND OIL	5250	3,800		3,137	663	67%	83%	905	24%
	LUBRICANTS	5255								

			CITY OF HATTIESBURG							
	001203 - GENERAL FUND-ENGR/PUBLIC SER		EXPENDITURE REPORT							
			8 Months Ending 05/31/13							
THIS MONTH			ANNUAL	OPEN PO	YTD	REMAINING	PERCENT		....PROJECTED....	
ACTUAL		OBJ/SUB	BUDGET	& CONTRACTS	ACTUAL	BALANCE	PLAN	ACTUAL	OVER/UNDER	%
	WEARING APPAREL	5355								
	HORT./LANDSCAPING SPLY	5440								
	MINOR EQUIPMENT	5460	2,524		2,259	265	67%	90%	864	34%
117	OTHER OPERATING MATL/S	5590	183		183		67%	100%	91	50%
117	**OPERATING SUPPLIES**		**6,707**		**5,607**	**1,100**	**67%**	**84%**	**1,703**	**25%**
	REPAIR & MAINTENANCE SP									
	BUILDING MATERIALS & S	5600	429		248	181	67%	58%	(57)	-13%
	ELECTRICAL SUPPLIES	5605	500		258	242	67%	52%	(112)	-22%
	PAINT AND PAINTING SPL	5650								
644	MTR VEHICLE REP. PTS/S	5700	1,500		675	825	67%	45%	(487)	-32%
	COMMUNICATION REPAIR P	5750	150			150	67%	0%	(150)	-100%
	OTHER REPAIR/MAINT. SP	5990	519		519		67%	100%	259	50%
644	**REPAIR & MAINTENANCE**		**3,098**		**1,701**	**1,398**	**67%**	**55%**	**(546)**	**-18%**
3,359	**SUPPLIES AND EXPENSES**		**19,200**	**1,938**	**12,714**	**4,548**	**67%**	**66%**	**(128)**	**-1%**
	PROFESSIONAL SERVICES									
53,813	ENGINEERING	6015	247,600		218,995	28,605	67%	88%	80,892	33%
	CONSULTANT SERV/SURVEY	6020	70,000			70,000	67%	0%	(70,000)	-100%
	ABSTRACTING & RECORDIN	6023								
	OTHER PROFESSIONAL SER	6049	54,000		23,483	30,518	67%	43%	(18,775)	-35%
53,813	**PROFESSIONAL SERVICE**		**371,600**		**242,477**	**129,123**	**67%**	**65%**	**(7,884)**	**-2%**
	COMMUNICATIONS									
172	TELEPHONE AND TELEGRAP	6060	1,200		718	482	67%	60%	(122)	-10%
	POSTAGE	6070								
172	**COMMUNICATIONS**		**1,200**		**718**	**482**	**67%**	**60%**	**(122)**	**-10%**
	TRANSPORTATION									
	TRAVEL EXPENSE	6110	3,000		1,680	1,320	67%	56%	(480)	-16%
108	FREIGHT	6120	550		458	93	67%	83%	137	25%
	MESSENGER/EXPRESS SERV	6130								
108	**TRANSPORTATION**		**3,550**		**2,138**	**1,412**	**67%**	**60%**	**(342)**	**-10%**
	ADVERTISING									

			CITY OF HATTIESBURG							
	001203 - GENERAL FUND-ENGR/PUBLIC SER		EXPENDITURE REPORT							
			8 Months Ending 05/31/13							
THIS MONTH			ANNUAL	OPEN PO	YTD	REMAINING	PERCENT		....PROJECTED....	
ACTUAL		OBJ/SUB	BUDGET	& CONTRACTS	ACTUAL	BALANCE	PLAN	ACTUAL	OVER/UNDER	%
	ADVERTISING	6150								
---			---	---	---	---	---	---	---	---
	ADVERTISING									
	PRINTING AND BINDING									
	PRINTING	6200								
	BLUELINES	6210								
	FILM PROCESSING	6240								
---			---	---	---	---	---	---	---	---
	PRINTING AND BINDING									
	INSURANCE									
	AUTOMOBILE INSURANCE	6265								
	SURETY AND FORGERY BON	6270								
---			---	---	---	---	---	---	---	---
	INSURANCE									
	UTILITIES									
83	GAS	6300	1,553		1,044	509	67%	67%	13	1%
282	ELECTRICITY	6305	5,000		2,056	2,944	67%	41%	(1,916)	-38%
---			---	---	---	---	---	---	---	---
364	**UTILITIES**		**6,553**		**3,100**	**3,453**	**67%**	**47%**	**(1,903)**	**-29%**
	REPR/MAINT-OUTSIDE LABO									
	BUILDING R&M	6350	15,947		14,538	1,409	67%	91%	5,860	37%
	OFFICE EQUIPMENT R&M	6365	1,400		65	1,335	67%	5%	(1,302)	-93%
	MINOR EQUIPMENT R&M	6382								
	MOTOR VEHICLE EQ. R&M	6384	1,500		65	1,435	67%	4%	(1,402)	-93%
	COMMUNICATION EQ. R&M	6390	1,350			1,350	67%	0%	(1,350)	-100%
60	DISINFECT./EXTERMINATI	6394	800		353	448	67%	44%	(270)	-34%
	TOW IN CHARGES	6398								
---			---	---	---	---	---	---	---	---
60	**REPR/MAINT-OUTSIDE L**		**20,997**		**15,021**	**5,976**	**67%**	**72%**	**1,534**	**7%**
	RENTALS									
348	OFFICE EQUIPMENT RENT	6410	4,000		2,764	1,236	67%	69%	146	4%
80	UNIFORM RENT	6430	500		346	154	67%	69%	19	4%
	OTHER RENT	6449								
---			---	---	---	---	---	---	---	---
428	**RENTALS**		**4,500**		**3,110**	**1,390**	**67%**	**69%**	**165**	**4%**
	OTHER SERVICES & CHARGE									
125	DUES AND MEMBERSHIPS	6840	700		125	575	67%	18%	(512)	-73%

			CITY OF HATTIESBURG							
	001203 - GENERAL FUND-ENGR/PUBLIC SER		EXPENDITURE REPORT							
			8 Months Ending 05/31/13							
THIS MONTH			ANNUAL	OPEN PO	YTD	REMAINING	PERCENT		....PROJECTED....	
ACTUAL		OBJ/SUB	BUDGET	& CONTRACTS	ACTUAL	BALANCE	PLAN	ACTUAL	OVER/UNDER	%
	REGISTRATION FEE/TUITI	6845	1,200		1,115	85	67%	93%	472	39%
	SERVICES NOT SPECIFIED	6999								
---			---	---	---	---	---	---	---	---
125	**OTHER SERVICES & CHA**		**1,900**		**1,240**	**660**	**67%**	**65%**	**(40)**	**-2%**
---			---	---	---	---	---	---	---	---
55,070	**OTHER SERVICES & CHAR**		**410,300**		**267,804**	**142,496**	**67%**	**65%**	**(8,594)**	**-2%**
	LAND									
	EASEMENTS	7010								
---			---	---	---	---	---	---	---	---
	LAND									
	MACHINERY AND EQUIPMENT									
	ENGINEERING	7305								
	OFFICE FURN/EQUIP.	7325								
	DATA PROCESSING EQUIP.	7327								
	COMMUNICATION EQUIPMEN	7355								
	EMERGENCY GENERATORS	7362								
---			---	---	---	---	---	---	---	---
	MACHINERY AND EQUIPM									
	VEHICLES									
	AUTOMOBILES	7400								
	PICK UP TRUCKS	7420								
---			---	---	---	---	---	---	---	---
	VEHICLES									
---			---	---	---	---	---	---	---	---
	CAPITAL OUTLAY									
---			---	---	---	---	---	---	---	---
95,892	**EXPENDITURES**		**769,080**	**1,938**	**500,918**	**266,224**	**67%**	**65%**	**(17,702)**	**-2%**

			CITY OF HATTIESBURG							
	001204 - GENERAL FUND-SHOP DIVISION		EXPENDITURE REPORT							
			8 Months Ending 05/31/13							
THIS MONTH			ANNUAL	OPEN PO	YTD	REMAINING	PERCENT		....PROJECTED....	
ACTUAL		OBJ/SUB	BUDGET	& CONTRACTS	ACTUAL	BALANCE	PLAN	ACTUAL	OVER/UNDER	%
	_____									
	_____									
	SALARIES									
31,707	REGULAR WAGES	4000	306,979		179,590	127,389	67%	59%	(37,593)	-12%
1,787	DISASTER RECOVERY WAGE	4010			7,031	(7,031)			10,546	
2,859	OVERTIME	4300	15,000		13,318	1,682	67%	89%	4,977	33%
	DISASTER RECOVERY OVER	4310								
---			---	---	---	---	---	---	---	---
36,352	**SALARIES**		**321,979**		**199,939**	**122,040**	**67%**	**62%**	**(22,070)**	**-7%**
	EMPLOYEE BENEFITS									
5,184	STATE RETIREMENT	4600	45,915		28,511	17,404	67%	62%	(3,148)	-7%
2,707	F.I.C.A. TAXES	4700	24,640		14,681	9,959	67%	60%	(2,618)	-11%
7,312	HOSPITALIZATION INS.	4800	61,990		32,532	29,458	67%	52%	(13,192)	-21%
	UNEMPLOYMENT BENEFITS	4900	1,650		644	1,006	67%	39%	(684)	-41%
	WORKMAN'S COMPENSATION	4910	7,800			7,800	67%	0%	(7,800)	-100%
---			---	---	---	---	---	---	---	---
15,203	**EMPLOYEE BENEFITS**		**141,995**		**76,368**	**65,627**	**67%**	**54%**	**(27,443)**	**-19%**
---			---	---	---	---	---	---	---	---
51,555	**PERSONAL SERVICES**		**463,974**		**276,307**	**187,667**	**67%**	**60%**	**(49,513)**	**-11%**
	_____									
	OFFICE SUPPLIES									
	PAPER	5003								
	PRINTED FORMS	5005								
	OTHER EXPENDABLE OFF.S	5010								
	MINOR OFFICE EQUIP/FUR	5020								
---			---	---	---	---	---	---	---	---
	OFFICE SUPPLIES									
	OPERATING SUPPLIES									
	CLEANING/JANITORIAL SP	5100								
	HOUSEHOLD SUPPLIES	5110								
	FOOD	5115								
	MEDICAL SUPPLIES	5120								
	CHEMICALS	5130	5,000		4,925	75	67%	99%	2,387	48%
	GAS AND OIL	5250	7,000		5,813	1,187	67%	83%	1,719	25%
	LUBRICANTS	5255								
	DIESEL FUEL	5257	8,000		3,598	4,402	67%	45%	(2,602)	-33%
	WEARING APPAREL	5355								

			CITY OF HATTIESBURG							
	001204 - GENERAL FUND-SHOP DIVISION		EXPENDITURE REPORT							
			8 Months Ending 05/31/13							
THIS MONTH			ANNUAL	OPEN PO	YTD	REMAINING	PERCENT		....PROJECTED....	
ACTUAL		OBJ/SUB	BUDGET	& CONTRACTS	ACTUAL	BALANCE	PLAN	ACTUAL	OVER/UNDER	%
	HAND TOOLS	5450	1,500		66	1,434	67%	4%	(1,400)	-93%
1,660	MINOR EQUIPMENT	5460	6,500		4,335	2,166	67%	67%	2	0%
	OTHER OPERATING MATL/S	5590	900		836	64	67%	93%	354	39%
---			---	---	---	---	---	---	---	---
1,660	**OPERATING SUPPLIES**		**28,900**		**19,572**	**9,328**	**67%**	**68%**	**458**	**2%**
	REPAIR & MAINTENANCE SP									
	BUILDING MATERIALS & S	5600	1,160	60	632	468	67%	54%	(212)	-18%
	ELECTRICAL SUPPLIES	5605	1,180		722	458	67%	61%	(96)	-8%
	PLUMBING SUPPLIES	5610	200		136	64	67%	68%	4	2%
	STRUCTURAL STEEL & IRO	5620	8,000	1,871	281	5,848	67%	4%	(7,578)	-95%
	PAINT AND PAINTING SPL	5650								
165	MTR VEHICLE REP. PTS/S	5700	2,000		1,253	747	67%	63%	(120)	-6%
	TROLLEY REPR PARTS & S	5710	485			485	67%	0%	(485)	-100%
	COMMUNICATION REPAIR P	5750	750			750	67%	0%	(750)	-100%
	EXPENDABLE WELDING SPL	5770								
502	OTHER REPAIR/MAINT. SP	5990	5,000	1,315	3,123	563	67%	62%	(315)	-6%
---			---	---	---	---	---	---	---	---
667	**REPAIR & MAINTENANCE**		**18,775**	**3,246**	**6,147**	**9,382**	**67%**	**33%**	**(9,554)**	**-51%**
---			---	---	---	---	---	---	---	---
2,327	**SUPPLIES AND EXPENSES**		**47,675**	**3,246**	**25,719**	**18,710**	**67%**	**54%**	**(9,096)**	**-19%**
	TRANSPORTATION									
	FREIGHT	6120								
---			---	---	---	---	---	---	---	---
	TRANSPORTATION									
	INSURANCE									
	BOILER MACHINERY	6260								
	AUTOMOBILE INSURANCE	6265								
---			---	---	---	---	---	---	---	---
	INSURANCE									
	UTILITIES									
145	GAS	6300	3,000		1,522	1,478	67%	51%	(716)	-24%
1,917	ELECTRICITY	6305	35,000		23,364	11,636	67%	67%	46	0%
---			---	---	---	---	---	---	---	---
2,062	**UTILITIES**		**38,000**		**24,885**	**13,115**	**67%**	**65%**	**(672)**	**-2%**
	REPR/MAINT-OUTSIDE LABO									
	BUILDING R&M	6350								

			CITY OF HATTIESBURG							
	001204 - GENERAL FUND-SHOP DIVISION		EXPENDITURE REPORT							
			8 Months Ending 05/31/13							
THIS MONTH			ANNUAL	OPEN PO	YTD	REMAINING	PERCENT		....PROJECTED....	
ACTUAL		OBJ/SUB	BUDGET	& CONTRACTS	ACTUAL	BALANCE	PLAN	ACTUAL	OVER/UNDER	%
	ELECTRICAL R&M	6355								
	PLUMBING EQUIPMENT R&M	6357								
	OFFICE EQUIPMENT R&M	6365	150			150	67%	0%	(150)	-100%
	FIXED EQUIPMENT R&M	6380	100			100	67%	0%	(100)	-100%
	MINOR EQUIPMENT R&M	6382	1,500			1,500	67%	0%	(1,500)	-100%
	MOTOR VEHICLE EQ. R&M	6384	2,500		768	1,732	67%	31%	(1,348)	-54%
	TROLLEY EQUIPMENT R&M	6385	1,301			1,301	67%	0%	(1,301)	-100%
	COMMUNICATION EQ. R&M	6390								
	DISINFECT./EXTERMINATI	6394								
	TOW IN CHARGES	6398								
	OTHER REPAIRS AND MAIN	6399								
---			---	---	---	---	---	---	---	---
	REPR/MAINT-OUTSIDE L		**5,551**		**768**	**4,783**	**67%**	**14%**	**(4,399)**	**-79%**
	RENTALS									
55	CYLINDER RENT	6425	700		394	306	67%	56%	(108)	-15%
376	UNIFORM RENT	6430	2,500		1,585	915	67%	63%	(122)	-5%
	OTHER RENT	6449								
---			---	---	---	---	---	---	---	---
431	**RENTALS**		**3,200**		**1,979**	**1,221**	**67%**	**62%**	**(231)**	**-7%**
	OTHER SERVICES & CHARGE									
	SERVICES NOT SPECIFIED	6999	600			600	67%	0%	(600)	-100%
---			---	---	---	---	---	---	---	---
	OTHER SERVICES & CHA		**600**			**600**	**67%**	**0%**	**(600)**	**-100%**
---			---	---	---	---	---	---	---	---
2,493	**OTHER SERVICES & CHAR**		**47,351**		**27,632**	**19,719**	**67%**	**58%**	**(5,903)**	**-12%**
	_____									
	BUILDING/BLD IMPROVEMEN									
	BUILDINGS	7100								
	PUBLIC WORKS SHOP BLD	7100 05								
---			---	---	---	---	---	---	---	---
	BUILDINGS									
---			---	---	---	---	---	---	---	---
	BUILDING/BLD IMPROVE									
	IMPROVEMENT OTHER THAN									
	OTHER IMPROVEMENTS	7295								
---			---	---	---	---	---	---	---	---
	IMPROVEMENT OTHER TH									

			CITY OF HATTIESBURG							
	001204 - GENERAL FUND-SHOP DIVISION		EXPENDITURE REPORT							
			8 Months Ending 05/31/13							
THIS MONTH			ANNUAL	OPEN PO	YTD	REMAINING	PERCENT		....PROJECTED....	
ACTUAL		OBJ/SUB	BUDGET	& CONTRACTS	ACTUAL	BALANCE	PLAN	ACTUAL	OVER/UNDER	%
	MACHINERY AND EQUIPMENT									
	HOUSEHOLD FURN/EQUIP.	7320								
	PLANT EQUIPMENT	7340								
	OTHER EQUIPMENT	7399	8,000			8,000	67%	0%	(8,000)	-100%
---			---	---	---	---	---	---	---	---
	MACHINERY AND EQUIPM		**8,000**			**8,000**	**67%**	**0%**	**(8,000)**	**-100%**
	VEHICLES									
	AUTOMOBILES	7400								
	PICK UP TRUCKS	7420								
	SPECIAL TRUCKS	7450								
---			---	---	---	---	---	---	---	---
	VEHICLES									
---			---	---	---	---	---	---	---	---
	CAPITAL OUTLAY		**8,000**			**8,000**	**67%**	**0%**	**(8,000)**	**-100%**
---			---	---	---	---	---	---	---	---
56,375	**EXPENDITURES**		**567,000**	**3,246**	**329,659**	**234,096**	**67%**	**58%**	**(72,511)**	**-13%**

			CITY OF HATTIESBURG							
	001205 - GENERAL FUND-G O & F SDIV.		EXPENDITURE REPORT							
			8 Months Ending 05/31/13							
THIS MONTH			ANNUAL	OPEN PO	YTD	REMAINING	PERCENT		....PROJECTED....	
ACTUAL		OBJ/SUB	BUDGET	& CONTRACTS	ACTUAL	BALANCE	PLAN	ACTUAL	OVER/UNDER	%
	_____									
	_____									
	SALARIES									
20,914	REGULAR WAGES	4000	212,282		124,470	87,812	67%	59%	(25,576)	-12%
	DISASTER RECOVERY WAGE	4010			310	(310)			465	
561	OVERTIME	4300	6,000		1,293	4,707	67%	22%	(4,060)	-68%
	DISASTER RECOVERY OVER	4310								
---			---	---	---	---	---	---	---	---
21,475	**SALARIES**		**218,282**		**126,073**	**92,209**	**67%**	**58%**	**(29,172)**	**-13%**
	EMPLOYEE BENEFITS									
3,062	STATE RETIREMENT	4600	31,130		17,978	13,152	67%	58%	(4,162)	-13%
1,617	F.I.C.A. TAXES	4700	16,705		9,424	7,281	67%	56%	(2,569)	-15%
5,480	HOSPITALIZATION INS.	4800	46,980		24,880	22,100	67%	53%	(9,660)	-21%
	UNEMPLOYMENT BENEFITS	4900								
	WORKMAN'S COMPENSATION	4910	1,553			1,553	67%	0%	(1,553)	-100%
---			---	---	---	---	---	---	---	---
10,159	**EMPLOYEE BENEFITS**		**96,368**		**52,282**	**44,086**	**67%**	**54%**	**(17,944)**	**-19%**
---			---	---	---	---	---	---	---	---
31,634	**PERSONAL SERVICES**		**314,650**		**178,355**	**136,295**	**67%**	**57%**	**(47,117)**	**-15%**
	_____									
	OFFICE SUPPLIES									
	PAPER	5003	400		312	88	67%	78%	68	17%
	PRINTED FORMS	5005								
	OTHER EXPENDABLE OFF.S	5010	1,500		1,476	24	67%	98%	714	48%
	MINOR OFFICE EQUIP/FUR	5020	650		650		67%	100%	325	50%
	SUBSCRIPTIONS,MAGS,MAP	5050								
	BOOKS	5070								
	COMPUTER SUPPLIES	5080								
---			---	---	---	---	---	---	---	---
	OFFICE SUPPLIES		**2,550**		**2,438**	**112**	**67%**	**96%**	**1,107**	**43%**
	OPERATING SUPPLIES									
	CLEANING/JANITORIAL SP	5100	2,450		1,129	1,321	67%	46%	(756)	-31%
	HOUSEHOLD SUPPLIES	5110	885		858	27	67%	97%	402	45%
	MEDICAL SUPPLIES	5120	100		88	12	67%	88%	32	32%
	CHEMICALS	5130								
	DIESEL FUEL-GENERATORS	5257	9,000		1,012	7,988	67%	11%	(7,482)	-83%
	WEARING APPAREL	5355								

			CITY OF HATTIESBURG							
	001205 - GENERAL FUND-G O & F SDIV.		EXPENDITURE REPORT							
			8 Months Ending 05/31/13							
THIS MONTH			ANNUAL	OPEN PO	YTD	REMAINING	PERCENT		....PROJECTED....	
ACTUAL		OBJ/SUB	BUDGET	& CONTRACTS	ACTUAL	BALANCE	PLAN	ACTUAL	OVER/UNDER	%
	HAND TOOLS	5450								
	MINOR EQUIPMENT	5460	250			250	67%	0%	(250)	-100%
	OTHER OPERATING MATL/S	5590	450	69	298	83	67%	66%	(2)	0%
---			---	---	---	---	---	---	---	---
	OPERATING SUPPLIES		**13,135**	**69**	**3,385**	**9,681**	**67%**	**26%**	**(8,057)**	**-61%**
	REPAIR & MAINTENANCE SP									
	BUILDING MATERIALS & S	5600	50		32	18	67%	64%	(2)	-4%
	ELECTRICAL SUPPLIES	5605	550			550	67%	0%	(550)	-100%
	PLUMBING SUPPLIES	5610	100			100	67%	0%	(100)	-100%
	PAINT AND PAINTING SPL	5650	500	231		269	67%	0%	(500)	-100%
	COMMUNICATION REPAIR P	5750								
---			---	---	---	---	---	---	---	---
	REPAIR & MAINTENANCE		**1,200**	**231**	**32**	**937**	**67%**	**3%**	**(1,152)**	**-96%**
---			---	---	---	---	---	---	---	---
	SUPPLIES AND EXPENSES		**16,885**	**300**	**5,855**	**10,730**	**67%**	**35%**	**(8,102)**	**-48%**
	_____									
	PROFESSIONAL SERVICES									
65	OTHER PROFESSIONAL SER	6049	17,455		781	16,674	67%	4%	(16,283)	-93%
---			---	---	---	---	---	---	---	---
65	**PROFESSIONAL SERVICE**		**17,455**		**781**	**16,674**	**67%**	**4%**	**(16,283)**	**-93%**
	COMMUNICATIONS									
115	TELEPHONE AND TELEGRAP	6060	1,500		1,401	99	67%	93%	601	40%
	POSTAGE	6070								
---			---	---	---	---	---	---	---	---
115	**COMMUNICATIONS**		**1,500**		**1,401**	**99**	**67%**	**93%**	**601**	**40%**
	TRANSPORTATION									
	FREIGHT	6120								
	MESSENGER/EXPRESS SERV	6130								
---			---	---	---	---	---	---	---	---
	TRANSPORTATION									
	UTILITIES									
63	ELECTRICITY	6305	780		511	269	67%	66%	(13)	-2%
---			---	---	---	---	---	---	---	---
63	**UTILITIES**		**780**		**511**	**269**	**67%**	**66%**	**(13)**	**-2%**
	REPR/MAINT-OUTSIDE LABO									
	OFFICE EQUIPMENT R&M	6365	750		65	685	67%	9%	(652)	-87%
	HOUSEHOLD EQUIPMENT R&	6370								

			CITY OF HATTIESBURG							
	001205 - GENERAL FUND-G O & F SDIV.		EXPENDITURE REPORT							
			8 Months Ending 05/31/13							
THIS MONTH			ANNUAL	OPEN PO	YTD	REMAINING	PERCENT		....PROJECTED....	
ACTUAL		OBJ/SUB	BUDGET	& CONTRACTS	ACTUAL	BALANCE	PLAN	ACTUAL	OVER/UNDER	%
	FIXED EQUIPMENT R&M	6380								
	MINOR EQUIPMENT R&M	6382								
	COMMUNICATION EQ. R&M	6390								
285	DISINFECT./EXTERMINATI	6394	1,500		855	645	67%	57%	(217)	-14%
---			---	---	---	---	---	---	---	---
285	**REPR/MAINT-OUTSIDE L**		**2,250**		**920**	**1,330**	**67%**	**41%**	**(870)**	**-39%**
	RENTALS									
	OFFICE EQUIPMENT RENT	6410								
279	UNIFORM RENT	6430	650		527	123	67%	81%	140	22%
170	MOP-MAT-RAG RENT	6435	1,900		865	1,035	67%	46%	(602)	-32%
---			---	---	---	---	---	---	---	---
449	**RENTALS**		**2,550**		**1,392**	**1,158**	**67%**	**55%**	**(462)**	**-18%**
	OTHER SERVICES & CHARGE									
	REGISTRATION FEE/TUITI	6845								
	LAUNDRY	6850								
---			---	---	---	---	---	---	---	---
	OTHER SERVICES & CHA									
---			---	---	---	---	---	---	---	---
976	**OTHER SERVICES & CHAR**		**24,535**		**5,005**	**19,530**	**67%**	**20%**	**(17,027)**	**-69%**
	_____									
	BUILDING/BLD IMPROVEMEN									
	BUILDINGS	7100								
	PUB.SERV./SANITA.BLDG	7100 18								
---			---	---	---	---	---	---	---	---
	BUILDINGS									
	BUILDING IMPROVEMENTS	7150								
	AUTOMATED FUEL CTR-BA	7150 03								
---			---	---	---	---	---	---	---	---
	BUILDING IMPROVEMEN									
---			---	---	---	---	---	---	---	---
	BUILDING/BLD IMPROVE									
	MACHINERY AND EQUIPMENT									
	HOUSEHOLD FURN/EQUIP.	7320								
160	OFFICE FURN/EQUIP.	7325	945		160	785	67%	17%	(705)	-75%
	DATA PROCESSING EQUIP.	7327	3,000			3,000	67%	0%	(3,000)	-100%
	FUEL FAC.SOFTWARE/EQ	7328	2,000			2,000	67%	0%	(2,000)	-100%
---			---	---	---	---	---	---	---	---

			CITY OF HATTIESBURG							
	001205 - GENERAL FUND-G O & F SDIV.		EXPENDITURE REPORT							
			8 Months Ending 05/31/13							
THIS MONTH			ANNUAL	OPEN PO	YTD	REMAINING	PERCENT		....PROJECTED....	
ACTUAL		OBJ/SUB	BUDGET	& CONTRACTS	ACTUAL	BALANCE	PLAN	ACTUAL	OVER/UNDER	%
160	**MACHINERY AND EQUIPM**		**5,945**		**160**	**5,785**	**67%**	**3%**	**(5,705)**	**-96%**
----------			---------	---------	---------	---------	-----	-----	--------	-----
160	**CAPITAL OUTLAY**		**5,945**		**160**	**5,785**	**67%**	**3%**	**(5,705)**	**-96%**
----------			---------	---------	---------	---------	-----	-----	--------	-----
32,771	**EXPENDITURES**		**362,015**	**300**	**189,375**	**172,340**	**67%**	**52%**	**(77,952)**	**-22%**

			CITY OF HATTIESBURG							
	001206 - GENERAL FUND-DRAINAGEDIV.		EXPENDITURE REPORT							
			8 Months Ending 05/31/13							
THIS MONTH			ANNUAL	OPEN PO	YTD	REMAINING	PERCENT		....PROJECTED....	
ACTUAL		OBJ/SUB	BUDGET	& CONTRACTS	ACTUAL	BALANCE	PLAN	ACTUAL	OVER/UNDER	%
	_____									
	_____									
	SALARIES									
12,590	REGULAR WAGES	4000	112,323		74,712	37,611	67%	67%	(255)	0%
371	DISASTER RECOVERY WAGE	4010			1,942	(1,942)			2,913	
576	OVERTIME	4300	1,500		3,363	(1,863)	67%	224%	3,544	236%
	DISASTER RECOVERY OVER	4310								
---			---	---	---	---	---	---	---	---
13,536	**SALARIES**		**113,823**		**80,016**	**33,807**	**67%**	**70%**	**6,201**	**5%**
	EMPLOYEE BENEFITS									
1,930	STATE RETIREMENT	4600	16,235		11,410	4,825	67%	70%	880	5%
1,028	F.I.C.A. TAXES	4700	8,710		6,060	2,650	67%	70%	380	4%
3,260	HOSPITALIZATION INS.	4800	26,100		16,840	9,260	67%	65%	(840)	-3%
	UNEMPLOYMENT BENEFITS	4900	1,000			1,000	67%	0%	(1,000)	-100%
	WORKMAN'S COMPENSATION	4910	5,010			5,010	67%	0%	(5,010)	-100%
---			---	---	---	---	---	---	---	---
6,218	**EMPLOYEE BENEFITS**		**57,055**		**34,310**	**22,745**	**67%**	**60%**	**(5,589)**	**-10%**
---			---	---	---	---	---	---	---	---
19,754	**PERSONAL SERVICES**		**170,878**		**114,327**	**56,551**	**67%**	**67%**	**612**	**0%**
	_____									
	OPERATING SUPPLIES									
	CHEMICALS	5130								
	GAS AND OIL	5250	5,500		2,212	3,288	67%	40%	(2,182)	-40%
	LUBRICANTS	5255								
	DIESEL FUEL	5257	1,500			1,500	67%	0%	(1,500)	-100%
	WEARING APPAREL	5355	976		476	501	67%	49%	(262)	-27%
	CONCRETE, CEMENT, ETC.	5405	19,000	4,200	1,766	13,034	67%	9%	(16,350)	-86%
	BRICK,STONE,MORTAR,ETC	5410	5,000		4,217	783	67%	84%	1,325	27%
	SAND,CLAY,GRVL,FILL DI	5415	12,350		10,472	1,878	67%	85%	3,358	27%
2,757	DRAINAGE PIPE & CULVER	5420	28,000	6,348	15,055	6,597	67%	54%	(5,417)	-19%
	HORT./LANDSCAPING SPLY	5440								
	HAND TOOLS	5450	1,000			1,000	67%	0%	(1,000)	-100%
273	MINOR EQUIPMENT	5460	1,200	242	273	684	67%	23%	(790)	-66%
	OTHER OPERATING MATL/S	5590	1,200		230	970	67%	19%	(854)	-71%
	OTHER OPER.MATL-BROWNS	5591								
---			---	---	---	---	---	---	---	---
3,030	**OPERATING SUPPLIES**		**75,726**	**10,790**	**34,701**	**30,235**	**67%**	**46%**	**(23,674)**	**-31%**

			CITY OF HATTIESBURG							
	001206 - GENERAL FUND-DRAINAGEDIV.		EXPENDITURE REPORT							
			8 Months Ending 05/31/13							
THIS MONTH			ANNUAL	OPEN PO	YTD	REMAINING	PERCENT		....PROJECTED....	
ACTUAL		OBJ/SUB	BUDGET	& CONTRACTS	ACTUAL	BALANCE	PLAN	ACTUAL	OVER/UNDER	%
	REPAIR & MAINTENANCE SP									
	STRUCTURAL STEEL & IRO	5620								
	MTR VEHICLE REP. PTS/S	5700	2,000		2	1,998	67%	0%	(1,996)	-100%
	COMMUNICATION REPAIR P	5750								
---			---	---	---	---	---	---	---	---
	REPAIR & MAINTENANCE		**2,000**		**2**	**1,998**	**67%**	**0%**	**(1,996)**	**-100%**
---			---	---	---	---	---	---	---	---
3,030	**SUPPLIES AND EXPENSES**		**77,726**	**10,790**	**34,703**	**32,233**	**67%**	**45%**	**(25,671)**	**-33%**
	PROFESSIONAL SERVICES									
	CONSULTANT SERV-BROWNS	6020								
	OTHER PROFESSIONAL SER	6049	30,000		7795-	37,795	67%	26%	(18,307)	-61%
---			---	---	---	---	---	---	---	---
	PROFESSIONAL SERVICE		**30,000**		**7795-**	**37,795**	**67%**	**26%**	**(18,307)**	**-61%**
	TRANSPORTATION									
	TRVL EXP-BROWNSFIELD P	6116								
	FREIGHT	6120								
---			---	---	---	---	---	---	---	---
	TRANSPORTATION									
	ADVERTISING									
	ADVERTISING	6150								
---			---	---	---	---	---	---	---	---
	ADVERTISING									
	INSURANCE									
	AUTOMOBILE INSURANCE	6265								
---			---	---	---	---	---	---	---	---
	INSURANCE									
	UTILITIES									
	ELECTRICITY	6305								
---			---	---	---	---	---	---	---	---
	UTILITIES									
	REPR/MAINT-OUTSIDE LABO									
	STREETS & STRUCTURES R	6360	400,000		252,284	147,716	67%	63%	(21,574)	-5%
	MOTOR VEHICLE EQ. R&M	6384	5,000			5,000	67%	0%	(5,000)	-100%
	COMMUNICATION EQ. R&M	6390								
	TOW IN CHARGES	6398	200			200	67%	0%	(200)	-100%
---			---	---	---	---	---	---	---	---

			CITY OF HATTIESBURG							
	001206 - GENERAL FUND-DRAINAGEDIV.		EXPENDITURE REPORT							
			8 Months Ending 05/31/13							
THIS MONTH			ANNUAL	OPEN PO	YTD	REMAINING	PERCENT		....PROJECTED....	
ACTUAL		OBJ/SUB	BUDGET	& CONTRACTS	ACTUAL	BALANCE	PLAN	ACTUAL	OVER/UNDER	%
	REPR/MAINT-OUTSIDE L		**405,200**		**252,284**	**152,916**	**67%**	**62%**	**(26,774)**	**-7%**
	RENTALS									
	MACHINERY RENT	6420								
	UNIFORM RENT	6430	800		788	12	67%	99%	382	48%
---			---	---	---	---	---	---	---	---
	RENTALS		**800**		**788**	**12**	**67%**	**99%**	**382**	**48%**
	OTHER SERVICES & CHARGE									
	SERVICES NOT SPECIFIED	6999								
---			---	---	---	---	---	---	---	---
	OTHER SERVICES & CHA									
---			---	---	---	---	---	---	---	---
	OTHER SERVICES & CHAR		**436,000**		**245,278**	**190,722**	**67%**	**56%**	**(68,082)**	**-16%**
	_____									
	LAND									
	EASEMENTS	7010								
---			---	---	---	---	---	---	---	---
	LAND									
	IMPROVEMENT OTHER THAN									
	DRAINS	7215								
7,725	NRCS EROSION CONTROL	7215 01	790,850		205,903	584,947	67%	26%	(481,995)	-61%
---			---	---	---	---	---	---	---	---
7,725	**DRAINS**		**790,850**		**205,903**	**584,947**	**67%**	**26%**	**(481,995)**	**-61%**
	OTHER IMPROVEMENTS	7295								
	MISC. PROJECTS	7296								
	ENVIRON PROJ-KERR MAG	7296 01								
	ENVIRON PROJ-MS TANK	7296 02								
	NCBM-BROWNFIELDS STUD	7296 03								
	ENVIRON PROJ-BROWNSFI	7296 04								
	DEQ-CREEK BANK-RIVER	7296 05								
	CREEK - LILLIE BURNEY	7296 06	37,000		17,960	19,040	67%	49%	(10,060)	-27%
1,046	CREEK - DEPOT BAKERY	7296 07	107,000		2,842	104,158	67%	3%	(102,736)	-96%
---			---	---	---	---	---	---	---	---
1,046	**MISC. PROJECTS**		**144,000**		**20,802**	**123,198**	**67%**	**14%**	**(112,796)**	**-78%**
---			---	---	---	---	---	---	---	---
8,771	**IMPROVEMENT OTHER TH**		**934,850**		**226,705**	**708,145**	**67%**	**24%**	**(594,792)**	**-64%**
	MACHINERY AND EQUIPMENT									
	DP EQUIP-BROWNSFIELD P	7324								

			CITY OF HATTIESBURG							
	001206 - GENERAL FUND-DRAINAGEDIV.		EXPENDITURE REPORT							
			8 Months Ending 05/31/13							
THIS MONTH			ANNUAL	OPEN PO	YTD	REMAINING	PERCENT		....PROJECTED....	
ACTUAL		OBJ/SUB	BUDGET	& CONTRACTS	ACTUAL	BALANCE	PLAN	ACTUAL	OVER/UNDER	%
	CONSTRUCTION EQUIPMENT	7345								
	PIPE	7370								
	OTHER EQUIPMENT	7399								
----------			---------	---------	---------	---------	-----	-----	--------	-----
	MACHINERY AND EQUIPM									
	VEHICLES									
	PICK UP TRUCKS	7420								
	DUMP TRUCKS	7440								
----------			---------	---------	---------	---------	-----	-----	--------	-----
	VEHICLES									
----------			---------	---------	---------	---------	-----	-----	--------	-----
8,771	**CAPITAL OUTLAY**		**934,850**		**226,705**	**708,145**	**67%**	**24%**	**(594,792)**	**-64%**
----------			---------	---------	---------	---------	-----	-----	--------	-----
31,555	**EXPENDITURES**		**1,619,454**	**10,790**	**621,012**	**987,651**	**67%**	**38%**	**(687,936)**	**-42%**

			CITY OF HATTIESBURG							
	001207 - GENERAL FUND-CONSTRUCTION		EXPENDITURE REPORT							
			8 Months Ending 05/31/13							
THIS MONTH			ANNUAL	OPEN PO	YTD	REMAINING	PERCENT		....PROJECTED....	
ACTUAL		OBJ/SUB	BUDGET	& CONTRACTS	ACTUAL	BALANCE	PLAN	ACTUAL	OVER/UNDER	%
	_____									
	_____									
	SALARIES									
45,813	REGULAR WAGES	4000	425,759		261,102	164,657	67%	61%	(34,105)	-8%
	DISASTER RECOVERY WAGE	4010			798	(798)			1,197	
213	OVERTIME	4300	8,000		5,091	2,909	67%	64%	(363)	-5%
	DISASTER RECOVERY OVER	4310								
---			---	---	---	---	---	---	---	---
46,026	**SALARIES**		**433,759**		**266,991**	**166,768**	**67%**	**62%**	**(33,272)**	**-8%**
	EMPLOYEE BENEFITS									
6,563	STATE RETIREMENT	4600	61,855		38,073	23,782	67%	62%	(4,745)	-8%
3,390	F.I.C.A. TAXES	4700	33,185		19,468	13,717	67%	59%	(3,983)	-12%
9,780	HOSPITALIZATION INS.	4800	83,520		46,252	37,268	67%	55%	(14,142)	-17%
	UNEMPLOYMENT BENEFITS	4900	2,500			2,500	67%	0%	(2,500)	-100%
	WORKMAN'S COMPENSATION	4910	32,000			32,000	67%	0%	(32,000)	-100%
---			---	---	---	---	---	---	---	---
19,733	**EMPLOYEE BENEFITS**		**213,060**		**103,793**	**109,267**	**67%**	**49%**	**(57,370)**	**-27%**
---			---	---	---	---	---	---	---	---
65,759	**PERSONAL SERVICES**		**646,819**		**370,784**	**276,035**	**67%**	**57%**	**(90,643)**	**-14%**
	_____									
	OFFICE SUPPLIES									
	PAPER	5003								
	PRINTED FORMS	5005								
	OTHER EXPENDABLE OFF.S	5010								
	MINOR OFFICE EQUIP/FUR	5020	800		750	50	67%	94%	325	41%
	SUBSCRIPTIONS,MAGS,MAP	5050								
	BOOKS	5070	150		150		67%	100%	75	50%
---			---	---	---	---	---	---	---	---
	OFFICE SUPPLIES		**950**		**900**	**50**	**67%**	**95%**	**400**	**42%**
	OPERATING SUPPLIES									
	CLEANING/JANITORIAL SP	5100								
	CHEMICALS	5130	150			150	67%	0%	(150)	-100%
	GAS AND OIL	5250	21,150		14,069	7,081	67%	67%	(46)	0%
	LUBRICANTS	5255	400			400	67%	0%	(400)	-100%
	DIESEL FUEL	5257	1,200		195	1,005	67%	16%	(907)	-76%
	WEARING APPAREL	5355	550		166	384	67%	30%	(300)	-55%
	CONCRETE, CEMENT, ETC.	5405	400			400	67%	0%	(400)	-100%

			CITY OF HATTIESBURG							
	001207 - GENERAL FUND-CONSTRUCTION		EXPENDITURE REPORT							
			8 Months Ending 05/31/13							
THIS MONTH			ANNUAL	OPEN PO	YTD	REMAINING	PERCENT		....PROJECTED....	
ACTUAL		OBJ/SUB	BUDGET	& CONTRACTS	ACTUAL	BALANCE	PLAN	ACTUAL	OVER/UNDER	%
	SAND,CLAY,GRVL,FILL DI	5415								
	DRAINAGE PIPE & CULVER	5420								
	HORT./LANDSCAPING SPLY	5440								
250	HAND TOOLS	5450	8,800	2,308	5,269	1,223	67%	60%	(896)	-10%
159	MINOR EQUIPMENT	5460	6,200		2,072	4,128	67%	33%	(3,092)	-50%
	TRAFFIC SIGNS	5545	100			100	67%	0%	(100)	-100%
298	OTHER OPERATING MATL/S	5590	5,000	427	2,421	2,151	67%	48%	(1,368)	-27%
---			---	---	---	---	---	---	---	---
707	**OPERATING SUPPLIES**		**43,950**	**2,735**	**24,192**	**17,022**	**67%**	**55%**	**(7,662)**	**-17%**
	REPAIR & MAINTENANCE SP									
40	BUILDING MATERIALS & S	5600	10,800	65	3,275	7,461	67%	30%	(5,887)	-55%
384	ELECTRICAL SUPPLIES	5605	13,800	773	10,327	2,700	67%	75%	1,690	12%
4	PLUMBING SUPPLIES	5610	3,000	248	1,398	1,354	67%	47%	(902)	-30%
	STRUCTURAL STEEL & IRO	5620	750			750	67%	0%	(750)	-100%
9	PAINT AND PAINTING SPL	5650	1,200		559	641	67%	47%	(361)	-30%
81	MTR VEHICLE REP. PTS/S	5700	3,000		2,260	740	67%	75%	390	13%
	GENERATOR REP. PTS/SPL	5705								
	COMMUNICATION REPAIR P	5750	500			500	67%	0%	(500)	-100%
	AGRICLTRL REPAIR PTS/S	5755	1,300		559	741	67%	43%	(461)	-35%
	EXPENDABLE WELDING SPL	5770	500			500	67%	0%	(500)	-100%
	OTHER REPAIR/MAINT. SP	5990	3,384		1,608	1,776	67%	48%	(972)	-29%
---			---	---	---	---	---	---	---	---
518	**REPAIR & MAINTENANCE**		**38,234**	**1,086**	**19,985**	**17,163**	**67%**	**52%**	**(8,256)**	**-22%**
	REPR PARTS/SUPPLIES									
	REPR/MAINT SPL-EATON S	5991 01	300			300	67%	0%	(300)	-100%
36,310	REPR/MAINT SPL-DOWNTOW	5991 02	118,050	28,191	54,403	35,456	67%	46%	(36,445)	-31%
	REPR SPLY-STORMS	5995								
	8/29/05-HURRICANE KAT	5995 01								
	9/1/08-HURRICANE GUST	5995 02								
---			---	---	---	---	---	---	---	---
	REPR SPLY-STORMS									
	8/29/05 STORM SUPPLIES	5996								
	8/29 CHEMICALS PW8226	5996 01								
	8/29 ALLIED BLD PW340	5996 02								
---			---	---	---	---	---	---	---	---
	8/29/05 STORM SUPPL									
---			---	---	---	---	---	---	---	---

			CITY OF HATTIESBURG							
	001207 - GENERAL FUND-CONSTRUCTION		EXPENDITURE REPORT							
			8 Months Ending 05/31/13							
THIS MONTH			ANNUAL	OPEN PO	YTD	REMAINING	PERCENT		....PROJECTED....	
ACTUAL		OBJ/SUB	BUDGET	& CONTRACTS	ACTUAL	BALANCE	PLAN	ACTUAL	OVER/UNDER	%
36,310	**REPR PARTS/SUPPLIES**		**118,350**	**28,191**	**54,403**	**35,756**	**67%**	**46%**	**(36,745)**	**-31%**
---			---	---	---	---	---	---	---	---
37,535	**SUPPLIES AND EXPENSES**		**201,484**	**32,012**	**99,481**	**69,991**	**67%**	**49%**	**(52,262)**	**-26%**
	PROFESSIONAL SERVICES									
	DEMOLITION	6013								
	ENGINEERING	6015								
---			---	---	---	---	---	---	---	---
	PROFESSIONAL SERVICE									
	COMMUNICATIONS									
96	TELEPHONE AND TELEGRAP	6060	1,640		1,221	419	67%	74%	191	12%
---			---	---	---	---	---	---	---	---
96	**COMMUNICATIONS**		**1,640**		**1,221**	**419**	**67%**	**74%**	**191**	**12%**
	TRANSPORTATION									
	FREIGHT	6120								
---			---	---	---	---	---	---	---	---
	TRANSPORTATION									
	ADVERTISING									
	ADVERTISING	6150								
---			---	---	---	---	---	---	---	---
	ADVERTISING									
	INSURANCE									
	AUTOMOBILE INSURANCE	6265								
---			---	---	---	---	---	---	---	---
	INSURANCE									
	UTILITIES									
	GAS	6300								
65	ELECTRICITY	6305	1,500		717	783	67%	48%	(424)	-28%
---			---	---	---	---	---	---	---	---
65	**UTILITIES**		**1,500**		**717**	**783**	**67%**	**48%**	**(424)**	**-28%**
	REPR/MAINT-OUTSIDE LABO									
	8/29/05 FACILITY REPRS	6351								
	8/29 TEMP ROOFS PW733	6351 01								
	8/29 ZOO ED CTR PW342	6351 02								
	8/29 AIRPORT PW2275	6351 03								
	8/29 ZOO GAZEBO PW194	6351 04								
	8/29 TRAIN DEP.PW1166	6351 05								

			CITY OF HATTIESBURG							
	001207 - GENERAL FUND-CONSTRUCTION		EXPENDITURE REPORT							
			8 Months Ending 05/31/13							
THIS MONTH			ANNUAL	OPEN PO	YTD	REMAINING	PERCENT		....PROJECTED....	
ACTUAL		OBJ/SUB	BUDGET	& CONTRACTS	ACTUAL	BALANCE	PLAN	ACTUAL	OVER/UNDER	%
	8/29 BURGR ROOF PW510	6351 06								
	8/29 AIRPORT PW6184	6351 07								
	8/29 P&F TRNG PW5158	6351 08								
	8/29 MAIN ROOF PW4465	6351 09								
	8/29 CONCESS RF PW447	6351 10								
	8/29 P&F TRNG PW5136	6351 11								
	8/29 SEWERS PW220	6351 12								
	8/29 WATER PW6379	6351 13								
	8/29 PLT 2 PW3427	6351 14								
	8/29 HPD PW474	6351 15								
	8/29 FIRE STA PW8294	6351 16								
	8/29 DAHMER PW1298	6351 17								
	8/29 DAHMER PW738	6351 18								
	8/29 DAHMER PW1269	6351 19								
	8/29 FIRE STA#8 PW444	6351 20								
	8/29 SOFTBALL PW736	6351 21								
	8/29 CAMERON FL PW730	6351 22								
	8/29 GARDEN CTR PW176	6351 23								
	8/29 AIRPORT PW3411	6351 24								
	8/29 AIRPORT PW3459	6351 25								
	8/29 CITY HALL PW1325	6351 26								
	8/29 LAGOON PW712	6351 27								
	8/29 TIMBERTON PW719	6351 28								
	8/29 HIGHLAND PW717	6351 29								
	8/29 TENNIS ROOF PW72	6351 30								
	8/29 AVIARY EXH PW742	6351 31								
	8/29 P&F ACA RF PW419	6351 32								
	8/29 COMPUTER6259/512	6351 33								
	8/29 WTR/SWR PW5492	6351 34								
	8/29 ROOF5492/295/117	6351 35								
	8/29 SPILLWAY PW7763	6351 36								
	8/29 PUB SER FAC PW48	6351 37								
	8/29 TRAF/CONST PW790	6351 38								
	8/29 CUL CTR RF PW332	6351 39								
---			---	---	---	---	---	---	---	---
	8/29/05 FACILITY RE									
	8/29/05 STORM REPAIRS	6353								

			CITY OF HATTIESBURG							
	001207 - GENERAL FUND-CONSTRUCTION		EXPENDITURE REPORT							
			8 Months Ending 05/31/13							
THIS MONTH			ANNUAL	OPEN PO	YTD	REMAINING	PERCENT		....PROJECTED....	
ACTUAL		OBJ/SUB	BUDGET	& CONTRACTS	ACTUAL	BALANCE	PLAN	ACTUAL	OVER/UNDER	%
	8/29/05 INFRAST REPRS	6354								
	8/29 TREE HAZ PW4667	6354 01								
	8/29 ROE PW 4667	6354 02								
	8/29 TRAFFIC SIGNS,SI	6354 03								
	8/29 NRCS DITCH CLEAR	6354 04								
	8/29 STREET REPAIRS	6354 05								
	8/29 LAGOON REPR WORK	6354 06								
	8/29 DEBRIS REMOVAL	6354 07								
	8/29 EMER SIGN INV &	6354 08								
	8/29 ROAD ASSESS & EN	6354 09								
	8/29 TRAF SIGNS PW508	6354 10								
	8/29 GENERATRS PW225-	6354 11								
	8/29 GENERATORS PW701	6354 12								
	8/29 BANK STABL PWXXX	6354 13								
---			---	---	---	---	---	---	---	---
	8/29/05 INFRAST REP									
	STREETS & STRUCTURES R	6360								
	OFFICE EQUIPMENT R&M	6365								
286	MINOR EQUIPMENT R&M	6382	1,700		286	1,414	67%	17%	(1,270)	-75%
	GENERATOR R&M	6383	99,717	20,218	37,088	42,411	67%	37%	(44,085)	-44%
	MOTOR VEHICLE EQ. R&M	6384	6,100		5,365	735	67%	88%	1,947	32%
	AGRICULTURAL EQ. R&M	6387	1,000		103	897	67%	10%	(845)	-85%
	COMMUNICATION EQ. R&M	6390	1,000		592	408	67%	59%	(112)	-11%
	DOWNTOWN LIGHTS R&M	6391	1,300			1,300	67%	0%	(1,300)	-100%
249	DISINFECT./EXTERMINATI	6394	400		249	151	67%	62%	(26)	-7%
	REPRS/MAINT-EATON SCHL	6395								
126	TOW IN CHARGES	6398	300		126	174	67%	42%	(110)	-37%
	OTHER REPAIRS AND MAIN	6399	2,454	1,098		1,356	67%	0%	(2,454)	-100%
---			---	---	---	---	---	---	---	---
661	**REPR/MAINT-OUTSIDE L**		**113,971**	**21,316**	**43,810**	**48,845**	**67%**	**38%**	**(48,255)**	**-42%**
	RENTALS									
	LAND RENT	6400								
	MACHINERY RENT	6420	261			261	67%	0%	(261)	-100%
17	CYLINDER RENT	6425	200		119	81	67%	60%	(21)	-11%
188	UNIFORM RENT	6430	2,500		1,496	1,004	67%	60%	(256)	-10%
26	OTHER RENT	6449	1,500		171	1,329	67%	11%	(1,243)	-83%
---			---	---	---	---	---	---	---	---

			CITY OF HATTIESBURG							
	001207 - GENERAL FUND-CONSTRUCTION		EXPENDITURE REPORT							
			8 Months Ending 05/31/13							
THIS MONTH			ANNUAL	OPEN PO	YTD	REMAINING	PERCENT		....PROJECTED....	
ACTUAL		OBJ/SUB	BUDGET	& CONTRACTS	ACTUAL	BALANCE	PLAN	ACTUAL	OVER/UNDER	%
231	**RENTALS**		**4,461**		**1,786**	**2,675**	**67%**	**40%**	**(1,781)**	**-40%**
	OTHER SERVICES & CHARGE									
	DUES AND MEMBERSHIPS	6840								
	SERVICES NOT SPECIFIED	6999								
---			---	---	---	---	---	---	---	---
	OTHER SERVICES & CHA									
---			---	---	---	---	---	---	---	---
1,054	**OTHER SERVICES & CHAR**		**121,572**	**21,316**	**47,533**	**52,723**	**67%**	**39%**	**(50,272)**	**-41%**
	_____									
	LAND									
	EASEMENTS	7010								
---			---	---	---	---	---	---	---	---
	LAND									
	BUILDING/BLD IMPROVEMEN									
	BUILDINGS	7100								
	EUREKA SCHOOL	7100 03								
	BURGER BUILDING	7100 04								
	SAFE ROOMS-MEMA GRANT	7100 25								
---			---	---	---	---	---	---	---	---
	BUILDINGS									
	BUILDING IMPROVEMENTS	7150								
	STORAGE BUILDING	7150 33								
	EATON SCHL ROOF/CLG P	7150 38								
---			---	---	---	---	---	---	---	---
	BUILDING IMPROVEMEN									
---			---	---	---	---	---	---	---	---
	BUILDING/BLD IMPROVE									
	IMPROVEMENT OTHER THAN									
	DRAINS	7215								
	OTHER IMPROVEMENTS	7295								
387	EAST JERUSALEM COMM C	7295 07	44,500	287	387	43,826	67%	1%	(43,919)	-99%
---			---	---	---	---	---	---	---	---
387	**OTHER IMPROVEMENTS**		**44,500**	**287**	**387**	**43,826**	**67%**	**1%**	**(43,919)**	**-99%**
---			---	---	---	---	---	---	---	---
387	**IMPROVEMENT OTHER TH**		**44,500**	**287**	**387**	**43,826**	**67%**	**1%**	**(43,919)**	**-99%**
	MACHINERY AND EQUIPMENT									
	8/29/05 STORM EQUIP	7302								

			CITY OF HATTIESBURG							
	001207 - GENERAL FUND-CONSTRUCTION		EXPENDITURE REPORT							
			8 Months Ending 05/31/13							
THIS MONTH			ANNUAL	OPEN PO	YTD	REMAINING	PERCENT		....PROJECTED....	
ACTUAL		OBJ/SUB	BUDGET	& CONTRACTS	ACTUAL	BALANCE	PLAN	ACTUAL	OVER/UNDER	%
	OFFICE FURN/EQUIP.	7325								
	DATA PROCESSING EQUIP.	7327								
	AGRICULTURAL EQUIPMENT	7335								
	CONSTRUCTION EQUIPMENT	7345								
	COMMUNICATION EQUIPMEN	7355								
	PIPE	7370								
	OTHER EQUIPMENT	7399								
---			---	---	---	---	---	---	---	---
	MACHINERY AND EQUIPM									
	VEHICLES									
	AUTOMOBILES	7400								
17,957	PICK UP TRUCKS	7420	18,000		17,957	43	67%	100%	8,935	50%
	DUMP TRUCKS	7440								
---			---	---	---	---	---	---	---	---
17,957	**VEHICLES**		**18,000**		**17,957**	**43**	**67%**	**100%**	**8,935**	**50%**
---			---	---	---	---	---	---	---	---
18,344	**CAPITAL OUTLAY**		**62,500**	**287**	**18,344**	**43,869**	**67%**	**29%**	**(34,984)**	**-56%**
---			---	---	---	---	---	---	---	---
122,692	**EXPENDITURES**		**1,032,375**	**53,615**	**536,142**	**442,618**	**67%**	**52%**	**(228,161)**	**-22%**

			CITY OF HATTIESBURG							
	001220 - GENERAL FUND-SANITATION DIV.		EXPENDITURE REPORT							
			8 Months Ending 05/31/13							
THIS MONTH			ANNUAL	OPEN PO	YTD	REMAINING	PERCENT		....PROJECTED....	
ACTUAL		OBJ/SUB	BUDGET	& CONTRACTS	ACTUAL	BALANCE	PLAN	ACTUAL	OVER/UNDER	%
	_____									
	_____									
	SALARIES									
76,752	REGULAR WAGES	4000	748,779		472,654	276,125	67%	63%	(39,797)	-5%
1,783	DISASTER RECOVERY WAGE	4010			14,587	(14,587)			21,880	
5,462	OVERTIME	4300	25,000		36,881	(11,881)	67%	148%	30,321	121%
	DISASTER RECOVERY OVER	4310								
---			---	---	---	---	---	---	---	---
83,996	**SALARIES**		**773,779**		**524,122**	**249,657**	**67%**	**68%**	**12,404**	**2%**
	EMPLOYEE BENEFITS									
11,978	STATE RETIREMENT	4600	110,345		74,740	35,605	67%	68%	1,765	2%
6,332	F.I.C.A. TAXES	4700	59,195		39,511	19,684	67%	67%	71	0%
22,049	HOSPITALIZATION INS.	4800	177,480		107,832	69,648	67%	61%	(15,732)	-9%
	UNEMPLOYMENT BENEFITS	4900	9,000			9,000	67%	0%	(9,000)	-100%
	WORKMAN'S COMPENSATION	4910	148,500			148,500	67%	0%	(148,500)	-100%
---			---	---	---	---	---	---	---	---
40,359	**EMPLOYEE BENEFITS**		**504,520**		**222,083**	**282,437**	**67%**	**44%**	**(171,395)**	**-34%**
---			---	---	---	---	---	---	---	---
124,355	**PERSONAL SERVICES**		**1,278,299**		**746,205**	**532,094**	**67%**	**58%**	**(158,991)**	**-12%**
	_____									
	OFFICE SUPPLIES									
	OTHER EXPENDABLE OFF.S	5010	800		695	105	67%	87%	242	30%
96	MINOR OFFICE EQUIP/FUR	5020	100		96	4	67%	96%	44	44%
	BOOKS	5070								
---			---	---	---	---	---	---	---	---
96	**OFFICE SUPPLIES**		**900**		**791**	**109**	**67%**	**88%**	**286**	**32%**
	OPERATING SUPPLIES									
483	CLEANING/JANITORIAL SP	5100	1,800		1,501	299	67%	83%	451	25%
	HOUSEHOLD SUPPLIES	5110	1,016		116	900	67%	11%	(842)	-83%
	FOOD	5115								
	MEDICAL SUPPLIES	5120								
	CHEMICALS	5130	1,000			1,000	67%	0%	(1,000)	-100%
	GAS AND OIL	5250	31,390		10,103	21,287	67%	32%	(16,235)	-52%
	NATURAL GAS FUEL	5252								
	LUBRICANTS	5255	3,000		2,550	450	67%	85%	825	28%
	DIESEL FUEL	5257	185,000		101,580	83,420	67%	55%	(32,630)	-18%
	WEARING APPAREL	5355	985		485	500	67%	49%	(257)	-26%

			CITY OF HATTIESBURG							
	001220 - GENERAL FUND-SANITATION DIV.		EXPENDITURE REPORT							
			8 Months Ending 05/31/13							
THIS MONTH			ANNUAL	OPEN PO	YTD	REMAINING	PERCENT		....PROJECTED....	
ACTUAL		OBJ/SUB	BUDGET	& CONTRACTS	ACTUAL	BALANCE	PLAN	ACTUAL	OVER/UNDER	%
	CONCRETE, CEMENT, ETC.	5405								
	HORT./LANDSCAPING SPLY	5440								
	HAND TOOLS	5450	1,500		585	915	67%	39%	(622)	-41%
	MINOR EQUIPMENT	5460	3,000		109	2,891	67%	4%	(2,836)	-95%
171	OTHER OPERATING MATL/S	5590	5,000		4,046	954	67%	81%	1,069	21%
---			---	---	---	---	---	---	---	---
654	**OPERATING SUPPLIES**		**233,691**		**121,076**	**112,615**	**67%**	**52%**	**(52,077)**	**-22%**
	REPAIR & MAINTENANCE SP									
235	BUILDING MATERIALS & S	5600	3,000		2,024	976	67%	67%	36	1%
	ELECTRICAL SUPPLIES	5605			181	(181)			271	
	PLUMBING SUPPLIES	5610	100			100	67%	0%	(100)	-100%
	STRUCTURAL STEEL & IRO	5620	1,500			1,500	67%	0%	(1,500)	-100%
	PAINT AND PAINTING SPL	5650								
10,526	MTR VEHICLE REP. PTS/S	5700	108,713	469	79,869	28,375	67%	73%	11,090	10%
	COMMUNICATION REPAIR P	5750	150		135	15	67%	90%	52	35%
	EXPENDABLE WELDING SPL	5770								
	MINOR COMPUTER EQUIP.	5800								
	OTHER REPAIR/MAINT. SP	5990								
---			---	---	---	---	---	---	---	---
10,761	**REPAIR & MAINTENANCE**		**113,463**	**469**	**82,209**	**30,785**	**67%**	**72%**	**9,850**	**9%**
---			---	---	---	---	---	---	---	---
11,511	**SUPPLIES AND EXPENSES**		**348,054**	**469**	**204,076**	**143,509**	**67%**	**59%**	**(41,940)**	**-12%**
	PROFESSIONAL SERVICES									
	ENGINEERING	6015								
	CONSULTANT SERV/SURVEY	6020								
	OTHER PROFESSIONAL SER	6049	330,200	250	328,242	1,708	67%	99%	162,163	49%
---			---	---	---	---	---	---	---	---
	PROFESSIONAL SERVICE		**330,200**	**250**	**328,242**	**1,708**	**67%**	**99%**	**162,163**	**49%**
	COMMUNICATIONS									
	TELEPHONE AND TELEGRAP	6060								
	POSTAGE	6070								
---			---	---	---	---	---	---	---	---
	COMMUNICATIONS									
	TRANSPORTATION									
	TRAVEL EXPENSE	6110	115		25	90	67%	22%	(77)	-67%
	FREIGHT	6120								

			CITY OF HATTIESBURG							
	001220 - GENERAL FUND-SANITATION DIV.		EXPENDITURE REPORT							
			8 Months Ending 05/31/13							
THIS MONTH			ANNUAL	OPEN PO	YTD	REMAINING	PERCENT		....PROJECTED....	
ACTUAL		OBJ/SUB	BUDGET	& CONTRACTS	ACTUAL	BALANCE	PLAN	ACTUAL	OVER/UNDER	%
---			---	---	---	---	---	---	---	---
	TRANSPORTATION		**115**		**25**	**90**	**67%**	**22%**	**(77)**	**-67%**
	ADVERTISING									
	ADVERTISING	6150								
---			---	---	---	---	---	---	---	---
	ADVERTISING									
	PRINTING AND BINDING									
	FILM PROCESSING	6240								
---			---	---	---	---	---	---	---	---
	PRINTING AND BINDING									
	INSURANCE									
	PUBLIC LIAB/PROPERTY D	6255								
	AUTOMOBILE INSURANCE	6265								
---			---	---	---	---	---	---	---	---
	INSURANCE									
	UTILITIES									
559	ELECTRICITY	6305	5,500		4,342	1,158	67%	79%	1,013	18%
	WATER	6315								
---			---	---	---	---	---	---	---	---
559	**UTILITIES**		**5,500**		**4,342**	**1,158**	**67%**	**79%**	**1,013**	**18%**
	REPR/MAINT-OUTSIDE LABO									
	PLUMBING EQUIPMENT R&M	6357								
	OFFICE EQUIPMENT R&M	6365								
	FIXED EQUIPMENT R&M	6380								
	MINOR EQUIPMENT R&M	6382								
5,051	MOTOR VEHICLE EQ. R&M	6384	100,000	5,339	21,109	73,552	67%	21%	(68,336)	-68%
	COMMUNICATION EQ. R&M	6390								
500	TOW IN CHARGES	6398	3,000		3,025	(25)	67%	101%	1,537	51%
	OTHER REPAIRS AND MAIN	6399	1,950		85	1,865	67%	4%	(1,822)	-93%
---			---	---	---	---	---	---	---	---
5,551	**REPR/MAINT-OUTSIDE L**		**104,950**	**5,339**	**24,219**	**75,392**	**67%**	**23%**	**(68,621)**	**-65%**
	RENTALS									
	LAND RENT	6400								
1,228	UNIFORM RENT	6430	15,500		5,159	10,341	67%	33%	(7,761)	-50%
169	MOP-MAT-RAG RENT	6435	800		689	111	67%	86%	233	29%
---			---	---	---	---	---	---	---	---
1,397	**RENTALS**		**16,300**		**5,848**	**10,452**	**67%**	**36%**	**(7,528)**	**-46%**

			CITY OF HATTIESBURG							
	001220 - GENERAL FUND-SANITATION DIV.		EXPENDITURE REPORT							
			8 Months Ending 05/31/13							
THIS MONTH			ANNUAL	OPEN PO	YTD	REMAINING	PERCENT		....PROJECTED....	
ACTUAL		OBJ/SUB	BUDGET	& CONTRACTS	ACTUAL	BALANCE	PLAN	ACTUAL	OVER/UNDER	%
	OTHER SERVICES & CHARGE									
113,037	TIPPING FEES	6880	789,550		594,683	194,867	67%	75%	102,474	13%
	TIPPING/DISPOSAL OTHER	6885	70,000		64,633	5,367	67%	92%	26,949	38%
23,935	RECYCLING FEES	6890	304,000		195,935	108,065	67%	64%	(10,097)	-3%
	SERVICES NOT SPECIFIED	6999								
---			---	---	---	---	---	---	---	---
136,972	**OTHER SERVICES & CHA**		**1,163,550**		**855,250**	**308,300**	**67%**	**74%**	**119,325**	**10%**
---			---	---	---	---	---	---	---	---
144,479	**OTHER SERVICES & CHAR**		**1,620,615**	**5,589**	**1,217,925**	**397,101**	**67%**	**75%**	**206,272**	**13%**
	LAND									
	LEASEHOLDS	7020								
---			---	---	---	---	---	---	---	---
	LAND									
	BUILDING/BLD IMPROVEMEN									
	BUILDINGS	7100								
	PUB.SERV./SANITA.BLDG	7100 18								
---			---	---	---	---	---	---	---	---
	BUILDINGS									
	BUILDING IMPROVEMENTS	7150								
	PUB.SERV./SANITA.BLDG	7150 38								
---			---	---	---	---	---	---	---	---
	BUILDING IMPROVEMEN									
---			---	---	---	---	---	---	---	---
	BUILDING/BLD IMPROVE									
	IMPROVEMENT OTHER THAN									
	OTHER IMPROVEMENTS	7295								
---			---	---	---	---	---	---	---	---
	IMPROVEMENT OTHER TH									
	MACHINERY AND EQUIPMENT									
	OFFICE FURN/EQUIP.	7325								
	PLANT EQUIPMENT	7340								
	COMMUNICATION EQUIPMEN	7355								
	OTHER EQUIPMENT	7399								
---			---	---	---	---	---	---	---	---
	MACHINERY AND EQUIPM									
	VEHICLES									

			CITY OF HATTIESBURG							
	001220 - GENERAL FUND-SANITATION DIV.		EXPENDITURE REPORT							
			8 Months Ending 05/31/13							
THIS MONTH			ANNUAL	OPEN PO	YTD	REMAINING	PERCENT		....PROJECTED....	
ACTUAL		OBJ/SUB	BUDGET	& CONTRACTS	ACTUAL	BALANCE	PLAN	ACTUAL	OVER/UNDER	%
	PICK UP TRUCKS	7420								
	HEAVY TRUCKS	7430								
	SANITATION TRUCKS	7460								
----------			---------	---------	---------	---------	-----	-----	--------	-----
	VEHICLES									
----------			---------	---------	---------	---------	-----	-----	--------	-----
	CAPITAL OUTLAY									
----------			---------	---------	---------	---------	-----	-----	--------	-----
280,346	**EXPENDITURES**		**3,246,968**	**6,058**	**2,168,206**	**1,072,704**	**67%**	**67%**	**5,341**	**0%**

			CITY OF HATTIESBURG							
	001221 - GENERAL FUND-STREET CLEANING		EXPENDITURE REPORT							
			8 Months Ending 05/31/13							
THIS MONTH			ANNUAL	OPEN PO	YTD	REMAINING	PERCENT		....PROJECTED....	
ACTUAL		OBJ/SUB	BUDGET	& CONTRACTS	ACTUAL	BALANCE	PLAN	ACTUAL	OVER/UNDER	%
	SALARIES									
4,796	REGULAR WAGES	4000	40,660		27,350	13,310	67%	67%	365	1%
15	DISASTER RECOVERY WAGE	4010			1,439	(1,439)			2,158	
38	OVERTIME	4300	1,000		2,216	(1,216)	67%	222%	2,324	232%
	DISASTER RECOVERY OVER	4310								
---			---	---	---	---	---	---	---	---
4,849	**SALARIES**		**41,660**		**31,005**	**10,655**	**67%**	**74%**	**4,847**	**12%**
	EMPLOYEE BENEFITS									
691	STATE RETIREMENT	4600	5,310		4,421	889	67%	83%	1,321	25%
365	F.I.C.A. TAXES	4700	3,190		2,328	862	67%	73%	302	9%
1,304	HOSPITALIZATION INS.	4800	10,440		6,736	3,704	67%	65%	(336)	-3%
	UNEMPLOYMENT BENEFITS	4900								
	WORKMAN'S COMPENSATION	4910	3,120			3,120	67%	0%	(3,120)	-100%
---			---	---	---	---	---	---	---	---
2,361	**EMPLOYEE BENEFITS**		**22,060**		**13,485**	**8,575**	**67%**	**61%**	**(1,832)**	**-8%**
---			---	---	---	---	---	---	---	---
7,210	**PERSONAL SERVICES**		**63,720**		**44,490**	**19,230**	**67%**	**70%**	**3,015**	**5%**
	OPERATING SUPPLIES									
	GAS AND OIL	5250	1,500			1,500	67%	0%	(1,500)	-100%
	LUBRICANTS	5255	300			300	67%	0%	(300)	-100%
	DIESEL FUEL	5257	6,500		3,116	3,384	67%	48%	(1,826)	-28%
	WEARING APPAREL	5355								
	HAND TOOLS	5450								
	MINOR EQUIPMENT	5460								
	OTHER OPERATING MATL/S	5590								
---			---	---	---	---	---	---	---	---
	OPERATING SUPPLIES		**8,300**		**3,116**	**5,184**	**67%**	**38%**	**(3,626)**	**-44%**
	REPAIR & MAINTENANCE SP									
	PAINT AND PAINTING SPL	5650								
	MTR VEHICLE REP. PTS/S	5700	16,500		9,165	7,335	67%	56%	(2,752)	-17%
---			---	---	---	---	---	---	---	---
	REPAIR & MAINTENANCE		**16,500**		**9,165**	**7,335**	**67%**	**56%**	**(2,752)**	**-17%**
---			---	---	---	---	---	---	---	---
	SUPPLIES AND EXPENSES		**24,800**		**12,280**	**12,520**	**67%**	**50%**	**(6,380)**	**-26%**

			CITY OF HATTIESBURG							
	001221 - GENERAL FUND-STREET CLEANING		EXPENDITURE REPORT							
			8 Months Ending 05/31/13							
THIS MONTH			ANNUAL	OPEN PO	YTD	REMAINING	PERCENT		....PROJECTED....	
ACTUAL		OBJ/SUB	BUDGET	& CONTRACTS	ACTUAL	BALANCE	PLAN	ACTUAL	OVER/UNDER	%
	_____									
	TRANSPORTATION									
	FREIGHT	6120								
----------			---------	---------	---------	---------	-----	-----	--------	-----
	TRANSPORTATION									
	ADVERTISING									
	ADVERTISING	6150								
----------			---------	---------	---------	---------	-----	-----	--------	-----
	ADVERTISING									
	INSURANCE									
	PUBLIC LIAB/PROPERTY D	6255								
	AUTOMOBILE INSURANCE	6265								
----------			---------	---------	---------	---------	-----	-----	--------	-----
	INSURANCE									
	REPR/MAINT-OUTSIDE LABO									
	MOTOR VEHICLE EQ. R&M	6384	10,000	5,000		5,000	67%	0%	(10,000)	-100%
	COMMUNICATION EQ. R&M	6390								
	TOW IN CHARGES	6398	250		250		67%	100%	125	50%
----------			---------	---------	---------	---------	-----	-----	--------	-----
	REPR/MAINT-OUTSIDE L		**10,250**	**5,000**	**250**	**5,000**	**67%**	**2%**	**(9,874)**	**-96%**
	RENTALS									
	UNIFORM RENT	6430	850		778	72	67%	92%	317	37%
----------			---------	---------	---------	---------	-----	-----	--------	-----
	RENTALS		**850**		**778**	**72**	**67%**	**92%**	**317**	**37%**
	OTHER SERVICES & CHARGE									
	SERVICES NOT SPECIFIED	6999								
----------			---------	---------	---------	---------	-----	-----	--------	-----
	OTHER SERVICES & CHA									
----------			---------	---------	---------	---------	-----	-----	--------	-----
	OTHER SERVICES & CHAR		**11,100**	**5,000**	**1,028**	**5,072**	**67%**	**9%**	**(9,558)**	**-86%**
	_____									
	BUILDING/BLD IMPROVEMEN									
	BUILDINGS	7100								
	PUB.SERV./SANITA.BLDG	7100 18								
----------			---------	---------	---------	---------	-----	-----	--------	-----
	BUILDINGS									
----------			---------	---------	---------	---------	-----	-----	--------	-----

			CITY OF HATTIESBURG							
	001221 - GENERAL FUND-STREET CLEANING		EXPENDITURE REPORT							
			8 Months Ending 05/31/13							
THIS MONTH			ANNUAL	OPEN PO	YTD	REMAINING	PERCENT		....PROJECTED....	
ACTUAL		OBJ/SUB	BUDGET	& CONTRACTS	ACTUAL	BALANCE	PLAN	ACTUAL	OVER/UNDER	%
	BUILDING/BLD IMPROVE									
	VEHICLES									
	PICK UP TRUCKS	7420								
	HEAVY TRUCKS	7430								
	SPECIAL TRUCKS	7450	204,793		204,793		67%	100%	102,396	50%
---			---	---	---	---	---	---	---	---
	VEHICLES		**204,793**		**204,793**		**67%**	**100%**	**102,396**	**50%**
---			---	---	---	---	---	---	---	---
	CAPITAL OUTLAY		**204,793**		**204,793**		**67%**	**100%**	**102,396**	**50%**
---			---	---	---	---	---	---	---	---
7,210	**EXPENDITURES**		**304,413**	**5,000**	**262,591**	**36,822**	**67%**	**86%**	**89,473**	**29%**

			CITY OF HATTIESBURG							
	001250 - GENERAL FUND-HEALTH DIVISION		EXPENDITURE REPORT							
			8 Months Ending 05/31/13							
THIS MONTH			ANNUAL	OPEN PO	YTD	REMAINING	PERCENT		....PROJECTED....	
ACTUAL		OBJ/SUB	BUDGET	& CONTRACTS	ACTUAL	BALANCE	PLAN	ACTUAL	OVER/UNDER	%
	_____									
	_____									
	SALARIES									
25,807	REGULAR WAGES	4000	265,719		164,337	101,382	67%	62%	(19,213)	-7%
563	DISASTER RECOVERY WAGE	4010			2,402	(2,402)			3,603	
840	OVERTIME	4300	6,000		5,435	565	67%	91%	2,152	36%
	DISASTER RECOVERY OVER	4310								
---			---	---	---	---	---	---	---	---
27,210	**SALARIES**		**271,719**		**172,174**	**99,545**	**67%**	**63%**	**(13,457)**	**-5%**
	EMPLOYEE BENEFITS									
3,880	STATE RETIREMENT	4600	38,750		24,552	14,198	67%	63%	(1,922)	-5%
2,059	F.I.C.A. TAXES	4700	20,795		12,970	7,826	67%	62%	(1,339)	-6%
7,312	HOSPITALIZATION INS.	4800	62,640		35,636	27,004	67%	57%	(9,186)	-15%
	UNEMPLOYMENT BENEFITS	4900								
	WORKMAN'S COMPENSATION	4910	12,000			12,000	67%	0%	(12,000)	-100%
---			---	---	---	---	---	---	---	---
13,251	**EMPLOYEE BENEFITS**		**134,185**		**73,158**	**61,027**	**67%**	**55%**	**(24,447)**	**-18%**
---			---	---	---	---	---	---	---	---
40,460	**PERSONAL SERVICES**		**405,904**		**245,332**	**160,572**	**67%**	**60%**	**(37,906)**	**-9%**
	_____									
	OFFICE SUPPLIES									
	OTHER EXPENDABLE OFF.S	5010								
---			---	---	---	---	---	---	---	---
	OFFICE SUPPLIES									
	OPERATING SUPPLIES									
	MEDICAL SUPPLIES	5120								
	CHEMICALS	5130	105,000	9,708	29,155	66,137	67%	28%	(61,267)	-58%
	CHEMICALS-MOSQUITO GRA	5135								
	GAS AND OIL	5250	22,500		13,987	8,513	67%	62%	(1,519)	-7%
	LUBRICANTS	5255								
	DIESEL FUEL	5257	3,000		2,637	363	67%	88%	955	32%
	OTHER FUEL	5260								
	WEARING APPAREL	5355	1,367		667	700	67%	49%	(366)	-27%
	HAND TOOLS	5450	700			700	67%	0%	(700)	-100%
3,435	MINOR EQUIPMENT	5460	4,241		3,716	525	67%	88%	1,333	31%
	HAZ.MAT SUP-DOMESTIC P	5466								
153	OTHER OPERATING MATL/S	5590	1,698		414	1,284	67%	24%	(1,076)	-63%

			CITY OF HATTIESBURG							
	001250 - GENERAL FUND-HEALTH DIVISION		EXPENDITURE REPORT							
			8 Months Ending 05/31/13							
THIS MONTH			ANNUAL	OPEN PO	YTD	REMAINING	PERCENT		....PROJECTED....	
ACTUAL		OBJ/SUB	BUDGET	& CONTRACTS	ACTUAL	BALANCE	PLAN	ACTUAL	OVER/UNDER	%
---			---	---	---	---	---	---	---	---
3,588	**OPERATING SUPPLIES**		**138,506**	**9,708**	**50,576**	**78,223**	**67%**	**37%**	**(62,642)**	**-45%**
	REPAIR & MAINTENANCE SP									
	ELECTRICAL SUPPLIES	5605								
	PLUMBING SUPPLIES	5610								
	PAINT AND PAINTING SPL	5650								
593	MTR VEHICLE REP. PTS/S	5700	4,000	114	2,084	1,802	67%	52%	(874)	-22%
	COMMUNICATION REPAIR P	5750								
	AGRICLTRL REPAIR PTS/S	5755	2,500			2,500	67%	0%	(2,500)	-100%
---			---	---	---	---	---	---	---	---
593	**REPAIR & MAINTENANCE**		**6,500**	**114**	**2,084**	**4,302**	**67%**	**32%**	**(3,374)**	**-52%**
---			---	---	---	---	---	---	---	---
4,181	**SUPPLIES AND EXPENSES**		**145,006**	**9,822**	**52,659**	**82,525**	**67%**	**36%**	**(66,017)**	**-46%**
	_____									
	PROFESSIONAL SERVICES									
	OTHER PROFESSIONAL SER	6049	400			400	67%	0%	(400)	-100%
---			---	---	---	---	---	---	---	---
	PROFESSIONAL SERVICE		**400**			**400**	**67%**	**0%**	**(400)**	**-100%**
	TRANSPORTATION									
	TRAVEL EXPENSE	6110								
	TRVL EXP-MOSQUITO GRAN	6111								
	FREIGHT	6120								
---			---	---	---	---	---	---	---	---
	TRANSPORTATION									
	ADVERTISING									
	ADVERTISING	6150								
---			---	---	---	---	---	---	---	---
	ADVERTISING									
	PRINTING AND BINDING									
	PRINTING-GRANT RELATED	6202								
---			---	---	---	---	---	---	---	---
	PRINTING AND BINDING									
	INSURANCE									
	PUBLIC LIAB/PROPERTY D	6255								
	AUTOMOBILE INSURANCE	6265								
---			---	---	---	---	---	---	---	---
	INSURANCE									

			CITY OF HATTIESBURG							
	001250 - GENERAL FUND-HEALTH DIVISION		EXPENDITURE REPORT							
			8 Months Ending 05/31/13							
THIS MONTH			ANNUAL	OPEN PO	YTD	REMAINING	PERCENT		....PROJECTED....	
ACTUAL		OBJ/SUB	BUDGET	& CONTRACTS	ACTUAL	BALANCE	PLAN	ACTUAL	OVER/UNDER	%
	REPR/MAINT-OUTSIDE LABO									
	MINOR EQUIPMENT R&M	6382	800			800	67%	0%	(800)	-100%
	MOTOR VEHICLE EQ. R&M	6384	4,900		225	4,675	67%	5%	(4,562)	-93%
	AGRICULTURAL EQ. R&M	6387	500			500	67%	0%	(500)	-100%
	COMMUNICATION EQ. R&M	6390								
	TOW IN CHARGES	6398	150			150	67%	0%	(150)	-100%
---			---	---	---	---	---	---	---	---
	REPR/MAINT-OUTSIDE L		**6,350**		**225**	**6,125**	**67%**	**4%**	**(6,012)**	**-95%**
	RENTALS									
312	UNIFORM RENT	6430	1,500		872	628	67%	58%	(192)	-13%
---			---	---	---	---	---	---	---	---
312	**RENTALS**		**1,500**		**872**	**628**	**67%**	**58%**	**(192)**	**-13%**
	OTHER SERVICES & CHARGE									
	REGISTRATION FEE/TUITI	6845	400			400	67%	0%	(400)	-100%
	SERVICES NOT SPECIFIED	6999								
---			---	---	---	---	---	---	---	---
	OTHER SERVICES & CHA		**400**			**400**	**67%**	**0%**	**(400)**	**-100%**
---			---	---	---	---	---	---	---	---
312	**OTHER SERVICES & CHAR**		**8,650**		**1,097**	**7,553**	**67%**	**13%**	**(7,004)**	**-81%**
	_____									
	MACHINERY AND EQUIPMENT									
	AGRICULTURAL EQUIPMENT	7335								
	EQUIP-MOSQUITO GRANT	7377								
	OTHER EQUIPMENT	7399								
---			---	---	---	---	---	---	---	---
	MACHINERY AND EQUIPM									
	VEHICLES									
	PICK UP TRUCKS	7420								
	DUMP TRUCKS	7440								
	SPECIAL TRUCKS	7450								
---			---	---	---	---	---	---	---	---
	VEHICLES									
---			---	---	---	---	---	---	---	---
	CAPITAL OUTLAY									
---			---	---	---	---	---	---	---	---
44,954	**EXPENDITURES**		**559,560**	**9,822**	**299,088**	**250,651**	**67%**	**53%**	**(110,928)**	**-20%**

			CITY OF HATTIESBURG							
	001260 - GENERAL FUND-ANIMAL CONTROL		EXPENDITURE REPORT							
			8 Months Ending 05/31/13							
THIS MONTH			ANNUAL	OPEN PO	YTD	REMAINING	PERCENT		....PROJECTED....	
ACTUAL		OBJ/SUB	BUDGET	& CONTRACTS	ACTUAL	BALANCE	PLAN	ACTUAL	OVER/UNDER	%
	_____									
	_____									
	SALARIES									
7,980	REGULAR WAGES	4000	82,854		44,140	38,714	67%	53%	(16,644)	-20%
	DISASTER RECOVERY WAGE	4010								
128	OVERTIME	4300	3,000		785	2,215	67%	26%	(1,822)	-61%
	DISASTER RECOVERY OVER	4310								
----------			---------	---------	---------	---------	-----	-----	--------	-----
8,108	**SALARIES**		**85,854**		**44,926**	**40,928**	**67%**	**52%**	**(18,464)**	**-22%**
	EMPLOYEE BENEFITS									
1,156	STATE RETIREMENT	4600	12,245		6,406	5,839	67%	52%	(2,635)	-22%
611	F.I.C.A. TAXES	4700	6,570		3,359	3,211	67%	51%	(1,531)	-23%
2,220	HOSPITALIZATION INS.	4800	20,880		9,204	11,676	67%	44%	(7,074)	-34%
	UNEMPLOYMENT BENEFITS	4900								
	WORKMAN'S COMPENSATION	4910	1,050			1,050	67%	0%	(1,050)	-100%
----------			---------	---------	---------	---------	-----	-----	--------	-----
3,987	**EMPLOYEE BENEFITS**		**40,745**		**18,969**	**21,776**	**67%**	**47%**	**(12,291)**	**-30%**
----------			---------	---------	---------	---------	-----	-----	--------	-----
12,095	**PERSONAL SERVICES**		**126,599**		**63,895**	**62,704**	**67%**	**50%**	**(30,756)**	**-24%**
	_____									
	OFFICE SUPPLIES									
	PAPER	5003	100			100	67%	0%	(100)	-100%
	PRINTED FORMS	5005								
	OTHER EXPENDABLE OFF.S	5010	200		123	77	67%	62%	(15)	-8%
	MINOR OFFICE EQUIP/FUR	5020								
	PHOTO SUPPLIES	5040								
	SUBSCRIPTIONS,MAGS,MAP	5050								
	BOOKS	5070								
	COMPUTER SUPPLIES	5080	200			200	67%	0%	(200)	-100%
----------			---------	---------	---------	---------	-----	-----	--------	-----
	OFFICE SUPPLIES		**500**		**123**	**377**	**67%**	**25%**	**(315)**	**-63%**
	OPERATING SUPPLIES									
	CLEANING/JANITORIAL SP	5100								
	HOUSEHOLD SUPPLIES	5110								
	FOOD	5115								
	MEDICAL SUPPLIES	5120								
	CHEMICALS	5130								

			CITY OF HATTIESBURG							
	001260 - GENERAL FUND-ANIMAL CONTROL		EXPENDITURE REPORT							
			8 Months Ending 05/31/13							
THIS MONTH			ANNUAL	OPEN PO	YTD	REMAINING	PERCENT		....PROJECTED....	
ACTUAL		OBJ/SUB	BUDGET	& CONTRACTS	ACTUAL	BALANCE	PLAN	ACTUAL	OVER/UNDER	%
	GAS AND OIL	5250	16,000		4,974	11,026	67%	31%	(8,538)	-53%
	LUBRICANTS	5255								
620	WEARING APPAREL	5355	2,050		2,041	9	67%	100%	1,011	49%
	HORT./LANDSCAPING SPLY	5440								
	HAND TOOLS	5450								
	MINOR EQUIPMENT	5460	1,800		195	1,605	67%	11%	(1,507)	-84%
99	OTHER OPERATING MATL/S	5590	500		384	116	67%	77%	76	15%
---			---	---	---	---	---	---	---	---
719	**OPERATING SUPPLIES**		**20,350**		**7,595**	**12,755**	**67%**	**37%**	**(8,957)**	**-44%**
	REPAIR & MAINTENANCE SP									
	BUILDING MATERIALS & S	5600								
	ELECTRICAL SUPPLIES	5605								
	PLUMBING SUPPLIES	5610								
	STRUCTURAL STEEL & IRO	5620								
	PAINT AND PAINTING SPL	5650								
	MTR VEHICLE REP. PTS/S	5700	3,000		495	2,505	67%	17%	(2,257)	-75%
	COMMUNICATION REPAIR P	5750								
	OTHER REPAIR/MAINT. SP	5990	100			100	67%	0%	(100)	-100%
---			---	---	---	---	---	---	---	---
	REPAIR & MAINTENANCE		**3,100**		**495**	**2,605**	**67%**	**16%**	**(2,357)**	**-76%**
---			---	---	---	---	---	---	---	---
719	**SUPPLIES AND EXPENSES**		**23,950**		**8,213**	**15,737**	**67%**	**34%**	**(11,630)**	**-49%**
	_____									
	PROFESSIONAL SERVICES									
	VETERINARIAN	6030	2,500		100	2,400	67%	4%	(2,350)	-94%
	OTHER PROFESSIONAL SER	6049								
---			---	---	---	---	---	---	---	---
	PROFESSIONAL SERVICE		**2,500**		**100**	**2,400**	**67%**	**4%**	**(2,350)**	**-94%**
	COMMUNICATIONS									
32	TELEPHONE AND TELEGRAP	6060	650		304	346	67%	47%	(194)	-30%
	POSTAGE	6070								
---			---	---	---	---	---	---	---	---
32	**COMMUNICATIONS**		**650**		**304**	**346**	**67%**	**47%**	**(194)**	**-30%**
	TRANSPORTATION									
	TRAVEL EXPENSE	6110	500			500	67%	0%	(500)	-100%
	FREIGHT	6120								
	MESSENGER/EXPRESS SERV	6130								

			CITY OF HATTIESBURG							
	001260 - GENERAL FUND-ANIMAL CONTROL		EXPENDITURE REPORT							
			8 Months Ending 05/31/13							
THIS MONTH			ANNUAL	OPEN PO	YTD	REMAINING	PERCENT		....PROJECTED....	
ACTUAL		OBJ/SUB	BUDGET	& CONTRACTS	ACTUAL	BALANCE	PLAN	ACTUAL	OVER/UNDER	%
---			---	---	---	---	---	---	---	---
	TRANSPORTATION		**500**			**500**	**67%**	**0%**	**(500)**	**-100%**
	ADVERTISING									
	ADVERTISING	6150								
---			---	---	---	---	---	---	---	---
	ADVERTISING									
	PRINTING AND BINDING									
	PRINTING	6200	130		126	4	67%	97%	59	45%
---			---	---	---	---	---	---	---	---
	PRINTING AND BINDING		**130**		**126**	**4**	**67%**	**97%**	**59**	**45%**
	INSURANCE									
	AUTOMOBILE INSURANCE	6265								
---			---	---	---	---	---	---	---	---
	INSURANCE									
	REPR/MAINT-OUTSIDE LABO									
	BUILDING R&M	6350								
	ELECTRICAL R&M	6355								
	PLUMBING EQUIPMENT R&M	6357								
	OFFICE EQUIPMENT R&M	6365								
	HOUSEHOLD EQUIPMENT R&	6370								
	FIXED EQUIPMENT R&M	6380								
	MINOR EQUIPMENT R&M	6382								
	MOTOR VEHICLE EQ. R&M	6384	1,500		425	1,075	67%	28%	(862)	-57%
	COMMUNICATION EQ. R&M	6390								
	CLEANING AND PAINTING	6392								
	DISINFECT./EXTERMINATI	6394								
	SIGN PAINTING	6396								
	TOW IN CHARGES	6398	70			70	67%	0%	(70)	-100%
	OTHER REPAIRS AND MAIN	6399								
---			---	---	---	---	---	---	---	---
	REPR/MAINT-OUTSIDE L		**1,570**		**425**	**1,145**	**67%**	**27%**	**(932)**	**-59%**
	RENTALS									
	OTHER RENT	6449								
---			---	---	---	---	---	---	---	---
	RENTALS									
	OTHER SERVICES & CHARGE									
	DUES AND MEMBERSHIPS	6840	125		125		67%	100%	62	50%

			CITY OF HATTIESBURG							
	001260 - GENERAL FUND-ANIMAL CONTROL		EXPENDITURE REPORT							
			8 Months Ending 05/31/13							
THIS MONTH			ANNUAL	OPEN PO	YTD	REMAINING	PERCENT		....PROJECTED....	
ACTUAL		OBJ/SUB	BUDGET	& CONTRACTS	ACTUAL	BALANCE	PLAN	ACTUAL	OVER/UNDER	%
	REGISTRATION FEE/TUITI	6845	350			350	67%	0%	(350)	-100%
9,374	SERVICES NOT SPECIFIED	6999	117,248		84,366	32,882	67%	72%	9,301	8%
---			---	---	---	---	---	---	---	---
9,374	**OTHER SERVICES & CHA**		**117,723**		**84,491**	**33,232**	**67%**	**72%**	**9,013**	**8%**
---			---	---	---	---	---	---	---	---
9,406	**OTHER SERVICES & CHAR**		**123,073**		**85,446**	**37,627**	**67%**	**69%**	**5,096**	**4%**
	MACHINERY AND EQUIPMENT									
	HOUSEHOLD FURN/EQUIP.	7320								
	OFFICE FURN/EQUIP.	7325								
	DATA PROCESSING EQUIP.	7327								
	COMMUNICATION EQUIPMEN	7355								
	OTHER EQUIPMENT	7399								
---			---	---	---	---	---	---	---	---
	MACHINERY AND EQUIPM									
	VEHICLES									
	AUTOMOBILES	7400								
	PICK UP TRUCKS	7420								
---			---	---	---	---	---	---	---	---
	VEHICLES									
---			---	---	---	---	---	---	---	---
	CAPITAL OUTLAY									
---			---	---	---	---	---	---	---	---
22,219	**EXPENDITURES**		**273,622**		**157,554**	**116,068**	**67%**	**58%**	**(37,290)**	**-14%**

			CITY OF HATTIESBURG							
	001280 - GENERAL FUND-HUMAN/SOC.ASST		EXPENDITURE REPORT							
			8 Months Ending 05/31/13							
THIS MONTH			ANNUAL	OPEN PO	YTD	REMAINING	PERCENT		....PROJECTED....	
ACTUAL		OBJ/SUB	BUDGET	& CONTRACTS	ACTUAL	BALANCE	PLAN	ACTUAL	OVER/UNDER	%
	_____									
	_____									
	OTHER SERVICES & CHARGE									
	CONTRIBUTIONS	6820								
	SEXUAL ASSUALT CRISIS	6820 04								
	P.A.C.E.	6820 05								
	INTERACTION FACTORY	6820 06								
	DOMESTIC ABUSE FAMILY	6820 07	3,500		3,500		67%	100%	1,750	50%
	FORREST CTY. HEALTH D	6820 08								
	NAT'L.GUARD ARMORY	6820 09								
	COUNCIL ON AGING	6820 10								
	BOY SCOUTS OF AMERICA	6820 11								
	PINE BELT MENTAL HEAL	6820 12								
	H'BURG. CONCERT BAND	6820 13								
	LIVESTOCK SHOW	6820 14								
	COURT APP'T SPEC.ADVO	6820 15								
	H'BURG.ED.LITERACY PR	6820 16								
	D.R.E.A.M.	6820 17								
	SALVATION ARMY BOYS/G	6820 18								
	H'BURG.ED.FOUNDATION	6820 19								
	N.E.E.D.S.	6820 20								
	CENTER FOR GIFTED STU	6820 21								
	RAILS TO TRAILS	6820 22	101,000		98,793	2,207	67%	98%	47,189	47%
	CTR FOR CHILD ABUSE P	6820 23								
	SO.CTRL.MS.AMER.RED C	6820 24	5,000			5,000	67%	0%	(5,000)	-100%
	UNIFIED NEIGHBORHOOD	6820 25								
	GULF PINES GIRL SCOUT	6820 26								
	USM COMM.SERVICE LEAR	6820 27								
	BIG BRO/BIG SIS OF SE	6820 28								
	HBRG CIVIC CHORUS/CON	6820 29								
	MS HOLIDAY SPECTACULA	6820 30								
	CORNERSTONE PROJECT	6820 31								
	SALVATION ARMY	6820 32								
	SO MS CHILDREN'S CTR	6820 33								
	CHRISTIAN SERVICES	6820 34								
	USM/DISABILITY STUDIE	6820 35								
	NEW TEST.YOUTH SAFE H	6820 36								

			CITY OF HATTIESBURG							
	001280 - GENERAL FUND-HUMAN/SOC.ASST		EXPENDITURE REPORT							
			8 Months Ending 05/31/13							
THIS MONTH			ANNUAL	OPEN PO	YTD	REMAINING	PERCENT		....PROJECTED....	
ACTUAL		OBJ/SUB	BUDGET	& CONTRACTS	ACTUAL	BALANCE	PLAN	ACTUAL	OVER/UNDER	%
	USM/SYMPHONY	6820 37	50,000		50,000		67%	100%	25,000	50%
	USM/DUBARD SCHOOL	6820 38								
	GREATER H'BURG COMMUN	6820 39								
	WORLD CHANGERS	6820 40								
	UNALLOCATED CONTRIBUT	6820 99								
---			---	---	---	---	---	---	---	---
	CONTRIBUTIONS		**159,500**		**152,293**	**7,207**	**67%**	**95%**	**68,939**	**43%**
---			---	---	---	---	---	---	---	---
	OTHER SERVICES & CHA		**159,500**		**152,293**	**7,207**	**67%**	**95%**	**68,939**	**43%**
---			---	---	---	---	---	---	---	---
	OTHER SERVICES & CHAR		**159,500**		**152,293**	**7,207**	**67%**	**95%**	**68,939**	**43%**
---			---	---	---	---	---	---	---	---
	EXPENDITURES		**159,500**		**152,293**	**7,207**	**67%**	**95%**	**68,939**	**43%**

			CITY OF HATTIESBURG							
	001402 - GENERAL FUND-ECONOMICDEV.		EXPENDITURE REPORT							
			8 Months Ending 05/31/13							
THIS MONTH			ANNUAL	OPEN PO	YTD	REMAINING	PERCENT		....PROJECTED....	
ACTUAL		OBJ/SUB	BUDGET	& CONTRACTS	ACTUAL	BALANCE	PLAN	ACTUAL	OVER/UNDER	%
	_____									
	_____									
	PROFESSIONAL SERVICES									
	OTHER PROFESSIONAL SER	6049								
---			---	---	---	---	---	---	---	---
	PROFESSIONAL SERVICE									
	TRANSPORTATION									
	TRAVEL-ALL AMER.CITY A	6110								
---			---	---	---	---	---	---	---	---
	TRANSPORTATION									
	REPR/MAINT-OUTSIDE LABO									
	BUILDING R&M	6350								
---			---	---	---	---	---	---	---	---
	REPR/MAINT-OUTSIDE L									
	OTHER SERVICES & CHARGE									
	CONTRIBUTIONS	6820								
	FCIPC/AREA DEV. PRTNR	6820 01	130,000		65,000	65,000	67%	50%	(32,500)	-25%
	PRCC TECH CENTER	6820 02								
	FCIPC/ECONOMIC DEVEL.	6820 03								
	H'BURG DOWNTOWN ASSN	6820 37	30,000		30,000		67%	100%	15,000	50%
	CAMP SHELBY STUDY	6820 45								
	PHWD-FEASIBILITY STUD	6820 50								
---			---	---	---	---	---	---	---	---
	CONTRIBUTIONS		**160,000**		**95,000**	**65,000**	**67%**	**59%**	**(17,500)**	**-11%**
---			---	---	---	---	---	---	---	---
	OTHER SERVICES & CHA		**160,000**		**95,000**	**65,000**	**67%**	**59%**	**(17,500)**	**-11%**
---			---	---	---	---	---	---	---	---
	OTHER SERVICES & CHAR		**160,000**		**95,000**	**65,000**	**67%**	**59%**	**(17,500)**	**-11%**
	_____									
	BUILDING/BLD IMPROVEMEN									
	BUILDING IMPROVEMENTS	7150								
	DOWNTOWN PROJ-OLD LIB	7150 14								
	DEPOT PROJECT	7150 15								
	HUB CITY LOFTS PROJEC	7150 41								
---			---	---	---	---	---	---	---	---
	BUILDING IMPROVEMEN									
---			---	---	---	---	---	---	---	---

			CITY OF HATTIESBURG							
	001402 - GENERAL FUND-ECONOMICDEV.		EXPENDITURE REPORT							
			8 Months Ending 05/31/13							
THIS MONTH			ANNUAL	OPEN PO	YTD	REMAINING	PERCENT		....PROJECTED....	
ACTUAL		OBJ/SUB	BUDGET	& CONTRACTS	ACTUAL	BALANCE	PLAN	ACTUAL	OVER/UNDER	%
	BUILDING/BLD IMPROVE									
	VEHICLES									
	TROLLEYS	7415								
----------			---------	---------	---------	---------	-----	-----	--------	-----
	VEHICLES									
----------			---------	---------	---------	---------	-----	-----	--------	-----
	CAPITAL OUTLAY									
----------			---------	---------	---------	---------	-----	-----	--------	-----
	EXPENDITURES		**160,000**		**95,000**	**65,000**	**67%**	**59%**	**(17,500)**	**-11%**

			CITY OF HATTIESBURG							
	001460 - GENERAL FUND-CAPITAL LEASES		EXPENDITURE REPORT							
			8 Months Ending 05/31/13							
THIS MONTH			ANNUAL	OPEN PO	YTD	REMAINING	PERCENT		....PROJECTED....	
ACTUAL		OBJ/SUB	BUDGET	& CONTRACTS	ACTUAL	BALANCE	PLAN	ACTUAL	OVER/UNDER	%
	_____									
	_____									
	NOTE PRINCIPAL									
	2005 STORM NOTE	8205								
	SAENGER SERIES 1999 NO	8220								
	MDB CAPITAL PROJECTS	8223								
	MDB-DEPOT PROJ	8223 01								
	MDB-WTR/SWR LINES	8223 02								
	MDB-HPD RENOVATION	8223 03								
	MDB-592 PROG 2001A PO	8223 04								
	MDB-FIRE STA #1	8223 05								
1,797	MDB-CHURCH PROJ	8223 06	22,000		14,375	7,625	67%	65%	(437)	-2%
	MDB-4TH ST WIDENING	8223 07								
	MDB-CHAIN PARK	8223 08								
	MDB-HUB CITY LOFTS	8223 09	84,000		27,205	56,795	67%	32%	(43,192)	-51%
----------			---------	---------	---------	---------	-----	-----	--------	-----
1,797	**MDB CAPITAL PROJECT**		**106,000**		**41,581**	**64,419**	**67%**	**39%**	**(43,628)**	**-41%**
	W&S USA YEAST 2002"B"N	8224	55,000			55,000	67%	0%	(55,000)	-100%
----------			---------	---------	---------	---------	-----	-----	--------	-----
1,797	**NOTE PRINCIPAL**		**161,000**		**41,581**	**119,419**	**67%**	**26%**	**(98,628)**	**-61%**
	INTEREST ON NOTES									
	2005 STORM NOTE	8305								
	SAENGER SERIES 1999 NO	8331								
	MDB CAPITAL PROJECT NO	8333								
	MDB-DEPOT PROJ	8333 01								
	MDB-WTR/SWR LINES	8333 02								
	MDB-HPD RENOVATION	8333 03								
	MDB-592 PROG 2001A PO	8333 04								
	MDB-FIRE STA #1	8333 05								
354	MDB-CHURCH PROJ	8333 06	6,000		2,978	3,022	67%	50%	(1,532)	-26%
	MDB-4TH ST WIDENING	8333 07								
	MDB-CHAIN PARK	8333 08								
	MDB-HUB CITY LOFTS	8333 09	39,400		13,265	26,135	67%	34%	(19,502)	-49%
----------			---------	---------	---------	---------	-----	-----	--------	-----
354	**MDB CAPITAL PROJECT**		**45,400**		**16,243**	**29,157**	**67%**	**36%**	**(21,035)**	**-46%**
	W&S USA YEAST 2002"B"N	8334	2,475		1,238	1,238	67%	50%	(617)	-25%
----------			---------	---------	---------	---------	-----	-----	--------	-----

			CITY OF HATTIESBURG							
	001460 - GENERAL FUND-CAPITAL LEASES		EXPENDITURE REPORT							
			8 Months Ending 05/31/13							
THIS MONTH			ANNUAL	OPEN PO	YTD	REMAINING	PERCENT		....PROJECTED....	
ACTUAL		OBJ/SUB	BUDGET	& CONTRACTS	ACTUAL	BALANCE	PLAN	ACTUAL	OVER/UNDER	%
354	**INTEREST ON NOTES**		**47,875**		**17,481**	**30,394**	**67%**	**37%**	**(21,653)**	**-45%**
	CAPITAL LEASE PAYMENTS									
	COMPUTER LEASE-INFO.SY	8510	121,000			121,000	67%	0%	(121,000)	-100%
	COMPUTER LEASE-POLICE	8511								
36,265	POLICE CARS LEASE	8512	553,000		288,868	264,132	67%	52%	(119,698)	-22%
	EMER GENERATORS LEASE	8513	415,930		415,928	2	67%	100%	207,962	50%
	2012 EQUIP LEASE	8514	41,000			41,000	67%	0%	(41,000)	-100%
	BUILDING LEASE	8515								
31,783	SANITATION TRUCKS LEAS	8520	351,220		251,807	99,413	67%	72%	26,490	8%
21,772	SANITATION CANS LEASE	8521	260,400		172,816	87,584	67%	66%	(1,176)	0%
	SPECIAL TRUCKS LEASE	8523								
	DUMP TRUCK LEASE	8525								
	DOWNTOWN LIGHTING	8531								
----------			---------	---------	---------	---------	-----	-----	--------	-----
89,820	**CAPITAL LEASE PAYMEN**		**1,742,550**		**1,129,418**	**613,132**	**67%**	**65%**	**(48,422)**	**-3%**
	INTEREST ON CAPITAL LEA									
	COMPUTER LEASE-INFO SY	8610	7,500			7,500	67%	0%	(7,500)	-100%
	COMPUTER LEASE-POLICE	8611								
681	POLICE CARS LEASE	8612	12,000		6,702	5,298	67%	56%	(1,946)	-16%
	EMER GENERATORS LEASE	8613	78,750		78,746	4	67%	100%	39,369	50%
	2012 EQUIP LEASE	8614	4,100			4,100	67%	0%	(4,100)	-100%
	BUILDING LEASE	8615								
2,760	SANITATION TRUCKS LEAS	8620	34,700		24,536	10,164	67%	71%	2,104	6%
1,414	SANITATION CANS LEASE	8621	17,850		12,676	5,174	67%	71%	1,164	7%
	SPECIAL TRUCKS LEASE	8623								
	DUMP TRUCK LEASE	8625								
	DOWNTOWN LIGHTING	8631								
----------			---------	---------	---------	---------	-----	-----	--------	-----
4,855	**INTEREST ON CAPITAL**		**154,900**		**122,660**	**32,240**	**67%**	**79%**	**29,090**	**19%**
----------			---------	---------	---------	---------	-----	-----	--------	-----
96,826	**DEBT SERVICE**		**2,106,325**		**1,311,140**	**795,185**	**67%**	**62%**	**(139,615)**	**-7%**
----------			---------	---------	---------	---------	-----	-----	--------	-----
96,826	**EXPENDITURES**		**2,106,325**		**1,311,140**	**795,185**	**67%**	**62%**	**(139,615)**	**-7%**

			CITY OF HATTIESBURG							
	001500 - GENERAL FUND-TRANSFERS		EXPENDITURE REPORT							
			8 Months Ending 05/31/13							
THIS MONTH			ANNUAL	OPEN PO	YTD	REMAINING	PERCENT		....PROJECTED....	
ACTUAL		OBJ/SUB	BUDGET	& CONTRACTS	ACTUAL	BALANCE	PLAN	ACTUAL	OVER/UNDER	%
	_____									
	_____									
	TRANSFERS TO OTHER FUND									
	T/T PARKS & RECREATION	9000 02	2,102,234		1,200,000	902,234	67%	57%	(302,234)	-14%
	T/T MUN,FIRE PROTECTIO	9000 05								
	T/T SPECIAL STREET	9000 08								
	T/T 1994 GO-IND. DEVEL	9000 103								
	T/T GOVNMT. COMPLEX BL	9000 104								
	T/T UDAG PAYBACK	9000 108								
	T/T GROUP INSURANCE TR	9000 109								
	T/T CITY B & I	9000 13								
	T/T POL/FIRE DIS./RELI	9000 18								
	T/T 2003 TIF B&I-CHAUV	9000 22								
	T/T AIRPORT IMPROVEMEN	9000 39	100,000		100,000		67%	100%	50,000	50%
	T/T MASS TRANSIT OPER.	9000 73	335,000		335,000		67%	100%	167,500	50%
	T/T W & S CONSTRUCTION	9000 75								
	T/T COMMUNITY CENTERS	9000 77	770,000		500,000	270,000	67%	65%	(20,000)	-3%
	T/T COMMUNITY DEVELOPM	9000 82								
	T/T '01 BOND CONSTR	9000 95								
	T/T MDB CAPITAL PROJ.F	9000 96								
	T/T KPZ CAPITAL	9000 98								
----------			---------	---------	---------	---------	-----	-----	--------	-----
	TRANSFERS TO OTHER F		**3,307,234**		**2,135,000**	**1,172,234**	**67%**	**65%**	**(104,734)**	**-3%**
----------			---------	---------	---------	---------	-----	-----	--------	-----
	TRANSFERS		**3,307,234**		**2,135,000**	**1,172,234**	**67%**	**65%**	**(104,734)**	**-3%**
----------			---------	---------	---------	---------	-----	-----	--------	-----
	EXPENDITURES		**3,307,234**		**2,135,000**	**1,172,234**	**67%**	**65%**	**(104,734)**	**-3%**

			CITY OF HATTIESBURG							
	001551 - GENERAL FUND-AIRPORT DIV.		EXPENDITURE REPORT							
			8 Months Ending 05/31/13							
THIS MONTH			ANNUAL	OPEN PO	YTD	REMAINING	PERCENT		....PROJECTED....	
ACTUAL		OBJ/SUB	BUDGET	& CONTRACTS	ACTUAL	BALANCE	PLAN	ACTUAL	OVER/UNDER	%
	SALARIES									
7,440	REGULAR WAGES	4000	63,440		44,640	18,800	67%	70%	3,520	6%
	DISASTER RECOVERY WAGE	4010								
	OVERTIME	4300	1,000		962	38	67%	96%	443	44%
	DISASTER RECOVERY OVER	4310								
7,440	**SALARIES**		**64,440**		**45,602**	**18,838**	**67%**	**71%**	**3,963**	**6%**
	EMPLOYEE BENEFITS									
1,061	STATE RETIREMENT	4600	9,195		6,503	2,692	67%	71%	559	6%
564	F.I.C.A. TAXES	4700	4,935		3,451	1,484	67%	70%	241	5%
1,956	HOSPITALIZATION INS.	4800	14,925		10,104	4,821	67%	68%	231	2%
	UNEMPLOYMENT BENEFITS	4900	3,650		2,122	1,528	67%	58%	(466)	-13%
	WORKMAN'S COMPENSATION	4910	2,400			2,400	67%	0%	(2,400)	-100%
3,581	**EMPLOYEE BENEFITS**		**35,105**		**22,180**	**12,925**	**67%**	**63%**	**(1,835)**	**-5%**
11,021	**PERSONAL SERVICES**		**99,545**		**67,782**	**31,763**	**67%**	**68%**	**2,128**	**2%**
	OPERATING SUPPLIES									
	CLEANING/JANITORIAL SP	5100	450		251	199	67%	56%	(73)	-16%
	CHEMICALS	5130	2,000		540	1,460	67%	27%	(1,190)	-60%
	GAS AND OIL	5250	7,000		3,360	3,640	67%	48%	(1,960)	-28%
	LUBRICANTS	5255	200			200	67%	0%	(200)	-100%
	DIESEL FUEL	5257	5,100			5,100	67%	0%	(5,100)	-100%
	ASPHALT & ASPHALT PROD	5400								
	CONCRETE, CEMENT, ETC.	5405								
	SAND,CLAY,GRVL,FILL DI	5415								
	HORT./LANDSCAPING SPLY	5440								
72	HAND TOOLS	5450	3,700		1,708	1,992	67%	46%	(1,138)	-31%
(8)	MINOR EQUIPMENT	5460	7,203		3,867	3,336	67%	54%	(1,402)	-19%
	OTHER OPERATING MATL/S	5590	800		82	718	67%	10%	(676)	-85%
63	**OPERATING SUPPLIES**		**26,453**		**9,808**	**16,645**	**67%**	**37%**	**(11,741)**	**-44%**
	REPAIR & MAINTENANCE SP									
	BUILDING MATERIALS & S	5600	1,500		599	901	67%	40%	(601)	-40%

			CITY OF HATTIESBURG							
	001551 - GENERAL FUND-AIRPORT DIV.		EXPENDITURE REPORT							
			8 Months Ending 05/31/13							
THIS MONTH			ANNUAL	OPEN PO	YTD	REMAINING	PERCENT		....PROJECTED....	
ACTUAL		OBJ/SUB	BUDGET	& CONTRACTS	ACTUAL	BALANCE	PLAN	ACTUAL	OVER/UNDER	%
	ELECTRICAL SUPPLIES	5605	4,350		4,089	261	67%	94%	1,783	41%
	PLUMBING SUPPLIES	5610	1,355		278	1,077	67%	21%	(937)	-69%
	STRUCTURAL STEEL & IRO	5620	1,100			1,100	67%	0%	(1,100)	-100%
	PAINT AND PAINTING SPL	5650								
102	MTR VEHICLE REP. PTS/S	5700	3,600		451	3,149	67%	13%	(2,923)	-81%
	COMMUNICATION REPAIR P	5750								
	AGRICLTRL REPAIR PTS/S	5755	2,500	348	387	1,765	67%	15%	(1,919)	-77%
	EXPENDABLE WELDING SPL	5770	1,970	127	347	1,497	67%	18%	(1,449)	-74%
86	OTHER REPAIR/MAINT. SP	5990	13,370	3,567	7,713	2,090	67%	58%	(1,800)	-13%
---			---	---	---	---	---	---	---	---
188	**REPAIR & MAINTENANCE**		**29,745**	**4,042**	**13,862**	**11,840**	**67%**	**47%**	**(8,951)**	**-30%**
---			---	---	---	---	---	---	---	---
251	**SUPPLIES AND EXPENSES**		**56,198**	**4,042**	**23,671**	**28,484**	**67%**	**42%**	**(20,691)**	**-37%**
	_____									
	PROFESSIONAL SERVICES									
	APPRAISAL	6017								
	OTHER PROFESSIONAL SER	6049								
---			---	---	---	---	---	---	---	---
	PROFESSIONAL SERVICE									
	COMMUNICATIONS									
	TELEPHONE AND TELEGRAP	6060								
---			---	---	---	---	---	---	---	---
	COMMUNICATIONS									
	TRANSPORTATION									
	TRAVEL EXPENSE	6110								
---			---	---	---	---	---	---	---	---
	TRANSPORTATION									
	ADVERTISING									
	ADVERTISING	6150								
---			---	---	---	---	---	---	---	---
	ADVERTISING									
	PRINTING AND BINDING									
	PRINTING	6200								
---			---	---	---	---	---	---	---	---
	PRINTING AND BINDING									
	INSURANCE									
	FIRE & EXTENDED COVERA	6250								

			CITY OF HATTIESBURG							
	001551 - GENERAL FUND-AIRPORT DIV.		EXPENDITURE REPORT							
			8 Months Ending 05/31/13							
THIS MONTH			ANNUAL	OPEN PO	YTD	REMAINING	PERCENT		....PROJECTED....	
ACTUAL		OBJ/SUB	BUDGET	& CONTRACTS	ACTUAL	BALANCE	PLAN	ACTUAL	OVER/UNDER	%
	PUBLIC LIAB/PROPERTY D	6255								
	BOILER MACHINERY	6260								
	AUTOMOBILE INSURANCE	6265								
---			---	---	---	---	---	---	---	---
	INSURANCE									
	UTILITIES									
36	GAS	6300	1,500		688	812	67%	46%	(468)	-31%
1,797	ELECTRICITY	6305	11,000		8,136	2,864	67%	74%	1,204	11%
	WATER	6315								
---			---	---	---	---	---	---	---	---
1,833	**UTILITIES**		**12,500**		**8,824**	**3,676**	**67%**	**71%**	**736**	**6%**
	REPR/MAINT-OUTSIDE LABO									
	BUILDING R&M	6350	1,870			1,870	67%	0%	(1,870)	-100%
	STREETS & STRUCTURES R	6360	200			200	67%	0%	(200)	-100%
	FIXED EQUIPMENT R&M	6380	600			600	67%	0%	(600)	-100%
	MINOR EQUIPMENT R&M	6382	850		500	350	67%	59%	(100)	-12%
	MOTOR VEHICLE EQ. R&M	6384	5,000		1,599	3,401	67%	32%	(2,601)	-52%
	CONSTRUCTION EQUIP R&M	6386	200			200	67%	0%	(200)	-100%
	AGRICULTURAL EQ. R&M	6387	5,350		41	5,309	67%	1%	(5,288)	-99%
	COMMUNICATION EQ. R&M	6390	400			400	67%	0%	(400)	-100%
102	DISINFECT./EXTERMINATI	6394	800		486	314	67%	61%	(70)	-9%
990	OTHER REPAIRS AND MAIN	6399	36,500	8,881	5,906	21,713	67%	16%	(27,640)	-76%
---			---	---	---	---	---	---	---	---
1,092	**REPR/MAINT-OUTSIDE L**		**51,770**	**8,881**	**8,532**	**34,357**	**67%**	**16%**	**(38,972)**	**-75%**
	RENTALS									
	LAND RENT	6400								
17	CYLINDER RENT	6425	155		119	36	67%	77%	23	15%
48	UNIFORM RENT	6430	500		408	92	67%	82%	112	22%
14	OTHER RENT	6449	7,050		14	7,036	67%	0%	(7,028)	-100%
---			---	---	---	---	---	---	---	---
79	**RENTALS**		**7,705**		**541**	**7,164**	**67%**	**7%**	**(6,893)**	**-89%**
	OTHER SERVICES & CHARGE									
	DUES AND MEMBERSHIPS	6840								
	REGISTRATION FEE/TUITI	6845								
85	SERVICES NOT SPECIFIED	6999	1,000		641	359	67%	64%	(38)	-4%
---			---	---	---	---	---	---	---	---
85	**OTHER SERVICES & CHA**		**1,000**		**641**	**359**	**67%**	**64%**	**(38)**	**-4%**

			CITY OF HATTIESBURG							
	001551 - GENERAL FUND-AIRPORT DIV.		EXPENDITURE REPORT							
			8 Months Ending 05/31/13							
THIS MONTH			ANNUAL	OPEN PO	YTD	REMAINING	PERCENT		....PROJECTED....	
ACTUAL		OBJ/SUB	BUDGET	& CONTRACTS	ACTUAL	BALANCE	PLAN	ACTUAL	OVER/UNDER	%
---			---	---	---	---	---	---	---	---
3,089	**OTHER SERVICES & CHAR**		**72,975**	**8,881**	**18,537**	**45,557**	**67%**	**25%**	**(45,169)**	**-62%**
	_____									
	LAND									
	LEASEHOLDS	7020								
---			---	---	---	---	---	---	---	---
	LAND									
	BUILDING/BLD IMPROVEMEN									
	BUILDINGS	7100								
	STORAGE SHED	7100 23								
---			---	---	---	---	---	---	---	---
	BUILDINGS									
	BUILDING IMPROVEMENTS	7150								
	HANGER #3 IMPROVEMENT	7150 32								
---			---	---	---	---	---	---	---	---
	BUILDING IMPROVEMEN									
---			---	---	---	---	---	---	---	---
	BUILDING/BLD IMPROVE									
	IMPROVEMENT OTHER THAN									
	DRAINS	7215								
	OTHER IMPROVEMENTS	7295								
---			---	---	---	---	---	---	---	---
	IMPROVEMENT OTHER TH									
	MACHINERY AND EQUIPMENT									
	AGRICULTURAL EQUIPMENT	7335								
	CONSTRUCTION EQUIPMENT	7345								
	COMMUNICATION EQUIPMEN	7355								
	OTHER EQUIPMENT	7399								
---			---	---	---	---	---	---	---	---
	MACHINERY AND EQUIPM									
	VEHICLES									
	PICK UP TRUCKS	7420								
	SPECIAL TRUCKS	7450								
---			---	---	---	---	---	---	---	---
	VEHICLES									
---			---	---	---	---	---	---	---	---
	CAPITAL OUTLAY									

			CITY OF HATTIESBURG							
	001551 - GENERAL FUND-AIRPORT DIV.		EXPENDITURE REPORT							
			8 Months Ending 05/31/13							
THIS MONTH			ANNUAL	OPEN PO	YTD	REMAINING	PERCENT		....PROJECTED....	
ACTUAL		OBJ/SUB	BUDGET	& CONTRACTS	ACTUAL	BALANCE	PLAN	ACTUAL	OVER/UNDER	%
----------			---------	---------	---------	---------	-----	-----	--------	-----
14,362	**EXPENDITURES**		**228,718**	**12,923**	**109,990**	**105,804**	**67%**	**48%**	**(63,732)**	**-28%**

			CITY OF HATTIESBURG							
	001553 - GENERAL FUND-CEMETERYDIV		EXPENDITURE REPORT							
			8 Months Ending 05/31/13							
THIS MONTH			ANNUAL	OPEN PO	YTD	REMAINING	PERCENT		....PROJECTED....	
ACTUAL		OBJ/SUB	BUDGET	& CONTRACTS	ACTUAL	BALANCE	PLAN	ACTUAL	OVER/UNDER	%
	_____									
	_____									
	SALARIES									
35,887	REGULAR WAGES	4000	394,227		234,958	159,269	67%	60%	(41,789)	-11%
8,384	DISASTER RECOVERY WAGE	4010			24,391	(24,391)			36,586	
4,874	OVERTIME	4300	21,000		29,463	(8,463)	67%	140%	23,194	110%
	DISASTER RECOVERY OVER	4310								
---			---	---	---	---	---	---	---	---
49,146	**SALARIES**		**415,227**		**288,812**	**126,415**	**67%**	**70%**	**17,991**	**4%**
	EMPLOYEE BENEFITS									
7,008	STATE RETIREMENT	4600	59,215		41,185	18,030	67%	70%	2,562	4%
3,663	F.I.C.A. TAXES	4700	31,770		21,323	10,447	67%	67%	214	1%
11,084	HOSPITALIZATION INS.	4800	88,740		51,824	36,916	67%	58%	(11,004)	-12%
	UNEMPLOYMENT BENEFITS	4900	3,500		1,571	1,929	67%	45%	(1,143)	-33%
	WORKMAN'S COMPENSATION	4910	16,000			16,000	67%	0%	(16,000)	-100%
---			---	---	---	---	---	---	---	---
21,755	**EMPLOYEE BENEFITS**		**199,225**		**115,902**	**83,323**	**67%**	**58%**	**(25,371)**	**-13%**
---			---	---	---	---	---	---	---	---
70,901	**PERSONAL SERVICES**		**614,452**		**404,714**	**209,738**	**67%**	**66%**	**(7,380)**	**-1%**
	_____									
	OFFICE SUPPLIES									
	PAPER	5003	100			100	67%	0%	(100)	-100%
	PRINTED FORMS	5005	100			100	67%	0%	(100)	-100%
	OTHER EXPENDABLE OFF.S	5010	800		243	557	67%	30%	(435)	-54%
	MINOR OFFICE EQUIP/FUR	5020	250			250	67%	0%	(250)	-100%
1,082	PUBLIC EDUCATION MAT'L	5032	1,263		1,082	181	67%	86%	360	29%
	PHOTO SUPPLIES	5040								
	SUBSCRIPTIONS,MAGS,MAP	5050								
	BOOKS	5070								
---			---	---	---	---	---	---	---	---
1,082	**OFFICE SUPPLIES**		**2,513**		**1,325**	**1,188**	**67%**	**53%**	**(525)**	**-21%**
	OPERATING SUPPLIES									
	CLEANING/JANITORIAL SP	5100	2,000		1,296	704	67%	65%	(56)	-3%
	FOOD	5115								
	MEDICAL SUPPLIES	5120								
1,310	CHEMICALS	5130	2,700		2,258	442	67%	84%	687	25%
4,642	GAS AND OIL	5250	26,000		19,681	6,319	67%	76%	3,521	14%

			CITY OF HATTIESBURG							
	001553 - GENERAL FUND-CEMETERYDIV		EXPENDITURE REPORT							
			8 Months Ending 05/31/13							
THIS MONTH			ANNUAL	OPEN PO	YTD	REMAINING	PERCENT		....PROJECTED....	
ACTUAL		OBJ/SUB	BUDGET	& CONTRACTS	ACTUAL	BALANCE	PLAN	ACTUAL	OVER/UNDER	%
	LUBRICANTS	5255	800			800	67%	0%	(800)	-100%
1,902	DIESEL FUEL	5257	21,000		18,371	2,629	67%	87%	6,556	31%
	WEARING APPAREL	5355	2,000		1,412	588	67%	71%	118	6%
	ASPHALT & ASPHALT PROD	5400								
	CONCRETE, CEMENT, ETC.	5405	500			500	67%	0%	(500)	-100%
	SAND,CLAY,GRVL,FILL DI	5415	2,000		1,800	200	67%	90%	700	35%
	DRAINAGE PIPE & CULVER	5420								
	HORT./LANDSCAPING SPLY	5440	7,500	475	6,164	861	67%	82%	1,746	23%
23	HAND TOOLS	5450	1,200		963	237	67%	80%	244	20%
908	MINOR EQUIPMENT	5460	3,500	248	2,094	1,158	67%	60%	(358)	-10%
	PUMPING EQUIPMENT PART	5495								
	TRAFFIC SIGNS	5545	50			50	67%	0%	(50)	-100%
	OTHER OPERATING MATL/S	5590	250			250	67%	0%	(250)	-100%
---			---	---	---	---	---	---	---	---
8,784	**OPERATING SUPPLIES**		**69,500**	**723**	**54,040**	**14,738**	**67%**	**78%**	**11,560**	**17%**
	REPAIR & MAINTENANCE SP									
	BUILDING MATERIALS & S	5600	500		26	474	67%	5%	(460)	-92%
	ELECTRICAL SUPPLIES	5605	500		103	397	67%	21%	(345)	-69%
	PLUMBING SUPPLIES	5610	500		491	9	67%	98%	236	47%
	STRUCTURAL STEEL & IRO	5620	300			300	67%	0%	(300)	-100%
	PAINT AND PAINTING SPL	5650	1,300			1,300	67%	0%	(1,300)	-100%
1,314	MTR VEHICLE REP. PTS/S	5700	10,000	1,109	7,876	1,015	67%	79%	1,814	18%
	COMMUNICATION REPAIR P	5750	700		687	14	67%	98%	330	47%
384	AGRICLTRL REPAIR PTS/S	5755	4,600		4,107	493	67%	89%	1,560	34%
	EXPENDABLE WELDING SPL	5770	100			100	67%	0%	(100)	-100%
	OTHER REPAIR/MAINT. SP	5990	100			100	67%	0%	(100)	-100%
---			---	---	---	---	---	---	---	---
1,698	**REPAIR & MAINTENANCE**		**18,600**	**1,109**	**13,289**	**4,201**	**67%**	**71%**	**1,333**	**7%**
---			---	---	---	---	---	---	---	---
11,564	**SUPPLIES AND EXPENSES**		**90,613**	**1,832**	**68,654**	**20,127**	**67%**	**76%**	**12,368**	**14%**
	_____									
	PROFESSIONAL SERVICES									
	ENGINEERING	6015								
	LEGAL	6025								
	MEDICAL	6027								
276	OTHER PROFESSIONAL SER	6049	3,500		2,243	1,257	67%	64%	(135)	-4%
---			---	---	---	---	---	---	---	---

			CITY OF HATTIESBURG							
	001553 - GENERAL FUND-CEMETERYDIV		EXPENDITURE REPORT							
			8 Months Ending 05/31/13							
THIS MONTH			ANNUAL	OPEN PO	YTD	REMAINING	PERCENT		....PROJECTED....	
ACTUAL		OBJ/SUB	BUDGET	& CONTRACTS	ACTUAL	BALANCE	PLAN	ACTUAL	OVER/UNDER	%
276	**PROFESSIONAL SERVICE**		**3,500**		**2,243**	**1,257**	**67%**	**64%**	**(135)**	**-4%**
	COMMUNICATIONS									
99	TELEPHONE AND TELEGRAP	6060	1,500		891	609	67%	59%	(163)	-11%
---			---	---	---	---	---	---	---	---
99	**COMMUNICATIONS**		**1,500**		**891**	**609**	**67%**	**59%**	**(163)**	**-11%**
	TRANSPORTATION									
	TRAVEL EXPENSE	6110	1,000		249	751	67%	25%	(626)	-63%
	FREIGHT	6120	50			50	67%	0%	(50)	-100%
---			---	---	---	---	---	---	---	---
	TRANSPORTATION		**1,050**		**249**	**801**	**67%**	**24%**	**(676)**	**-64%**
	ADVERTISING									
	ADVERTISING	6150								
---			---	---	---	---	---	---	---	---
	ADVERTISING									
	PRINTING AND BINDING									
	PRINTING	6200	200		115	85	67%	58%	(27)	-14%
	BLUELINES	6210								
---			---	---	---	---	---	---	---	---
	PRINTING AND BINDING		**200**		**115**	**85**	**67%**	**58%**	**(27)**	**-14%**
	INSURANCE									
	FIRE & EXTENDED COVERA	6250								
	PUBLIC LIAB/PROPERTY D	6255								
	AUTOMOBILE INSURANCE	6265								
---			---	---	---	---	---	---	---	---
	INSURANCE									
	UTILITIES									
61	GAS	6300	1,000		639	361	67%	64%	(41)	-4%
426	ELECTRICITY	6305	8,000		3,109	4,891	67%	39%	(3,336)	-42%
	WATER	6315								
---			---	---	---	---	---	---	---	---
487	**UTILITIES**		**9,000**		**3,748**	**5,252**	**67%**	**42%**	**(3,378)**	**-38%**
	REPR/MAINT-OUTSIDE LABO									
	BUILDING R&M	6350	500			500	67%	0%	(500)	-100%
	ELECTRICAL R&M	6355								
	PLUMBING EQUIPMENT R&M	6357								
963	STREETS & STRUCTURES R	6360	2,600		963	1,637	67%	37%	(1,155)	-44%
	OFFICE EQUIPMENT R&M	6365	400			400	67%	0%	(400)	-100%

			CITY OF HATTIESBURG							
	001553 - GENERAL FUND-CEMETERYDIV		EXPENDITURE REPORT							
			8 Months Ending 05/31/13							
THIS MONTH			ANNUAL	OPEN PO	YTD	REMAINING	PERCENT		....PROJECTED....	
ACTUAL		OBJ/SUB	BUDGET	& CONTRACTS	ACTUAL	BALANCE	PLAN	ACTUAL	OVER/UNDER	%
	FIXED EQUIPMENT R&M	6380								
	MINOR EQUIPMENT R&M	6382	200			200	67%	0%	(200)	-100%
3,166	MOTOR VEHICLE EQ. R&M	6384	16,500	450	5,604	10,446	67%	34%	(8,094)	-49%
	CONSTRUCTION EQUIP R&M	6386	3,000		2,980	20	67%	99%	1,470	49%
	AGRICULTURAL EQ. R&M	6387	1,500			1,500	67%	0%	(1,500)	-100%
65	COMMUNICATION EQ. R&M	6390	250		65	185	67%	26%	(152)	-61%
4,300	CLEANING AND PAINTING	6392	7,000	1,750	4,300	950	67%	61%	(550)	-8%
339	DISINFECT./EXTERMINATI	6394	600		519	81	67%	87%	178	30%
	SIGN PAINTING	6396								
200	TOW IN CHARGES	6398	500		450	50	67%	90%	175	35%
51	OTHER REPAIRS AND MAIN	6399	250		134	116	67%	54%	(48)	-19%
---			---	---	---	---	---	---	---	---
9,084	**REPR/MAINT-OUTSIDE L**		**33,300**	**2,200**	**15,015**	**16,085**	**67%**	**45%**	**(10,777)**	**-32%**
	RENTALS									
	MACHINERY RENT	6420								
	CYLINDER RENT	6425								
	UNIFORM RENT	6430	3,200		1,619	1,581	67%	51%	(771)	-24%
	MOP-MAT-RAG RENT	6435	1,000		642	358	67%	64%	(36)	-4%
---			---	---	---	---	---	---	---	---
	RENTALS		**4,200**		**2,261**	**1,939**	**67%**	**54%**	**(808)**	**-19%**
	OTHER SERVICES & CHARGE									
	DUES AND MEMBERSHIPS	6840	300		260	40	67%	87%	90	30%
	REGISTRATION FEE/TUITI	6845	300		220	80	67%	73%	30	10%
	SERVICES NOT SPECIFIED	6999								
---			---	---	---	---	---	---	---	---
	OTHER SERVICES & CHA		**600**		**480**	**120**	**67%**	**80%**	**120**	**20%**
---			---	---	---	---	---	---	---	---
9,947	**OTHER SERVICES & CHAR**		**53,350**	**2,200**	**25,001**	**26,149**	**67%**	**47%**	**(15,848)**	**-30%**
	_____									
	LAND									
	LAND	7000	5,000		500	4,500	67%	10%	(4,250)	-85%
---			---	---	---	---	---	---	---	---
	LAND		**5,000**		**500**	**4,500**	**67%**	**10%**	**(4,250)**	**-85%**
	BUILDING/BLD IMPROVEMEN									
	BUILDINGS	7100								
	BUILDING IMPROVEMENTS	7150								
	HIGHLAND	7150 13								

			CITY OF HATTIESBURG							
	001553 - GENERAL FUND-CEMETERYDIV		EXPENDITURE REPORT							
			8 Months Ending 05/31/13							
THIS MONTH			ANNUAL	OPEN PO	YTD	REMAINING	PERCENT		....PROJECTED....	
ACTUAL		OBJ/SUB	BUDGET	& CONTRACTS	ACTUAL	BALANCE	PLAN	ACTUAL	OVER/UNDER	%
---			---	---	---	---	---	---	---	---
	BUILDING IMPROVEMEN									
---			---	---	---	---	---	---	---	---
	BUILDING/BLD IMPROVE									
	IMPROVEMENT OTHER THAN									
	DRAINS	7215								
	STREETS & ROADWAYS	7230	32,000			32,000	67%	0%	(32,000)	-100%
	LANDSCAPING	7250								
2,688	OTHER IMPROVEMENTS	7295	29,000		2,688	26,312	67%	9%	(24,968)	-86%
---			---	---	---	---	---	---	---	---
2,688	**IMPROVEMENT OTHER TH**		**61,000**		**2,688**	**58,312**	**67%**	**4%**	**(56,968)**	**-93%**
	MACHINERY AND EQUIPMENT									
	OFFICE FURN/EQUIP.	7325	1,000		999	1	67%	100%	498	50%
680	AGRICULTURAL EQUIPMENT	7335	10,000		8,676	1,324	67%	87%	3,014	30%
	CONSTRUCTION EQUIPMENT	7345								
1,625	COMMUNICATION EQUIPMEN	7355	2,500		1,625	875	67%	65%	(62)	-2%
	PIPE	7370								
	OTHER EQUIPMENT	7399								
---			---	---	---	---	---	---	---	---
2,305	**MACHINERY AND EQUIPM**		**13,500**		**11,300**	**2,200**	**67%**	**84%**	**3,450**	**26%**
	VEHICLES									
	AUTOMOBILES	7400								
	PICK UP TRUCKS	7420								
	DUMP TRUCKS	7440								
---			---	---	---	---	---	---	---	---
	VEHICLES									
---			---	---	---	---	---	---	---	---
4,993	**CAPITAL OUTLAY**		**79,500**		**14,488**	**65,012**	**67%**	**18%**	**(57,768)**	**-73%**
---			---	---	---	---	---	---	---	---
97,404	**EXPENDITURES**		**837,915**	**4,032**	**512,858**	**321,026**	**67%**	**61%**	**(68,627)**	**-8%**

			CITY OF HATTIESBURG							
	001560 - GENERAL FUND-PARKING OPER.		EXPENDITURE REPORT							
			8 Months Ending 05/31/13							
THIS MONTH			ANNUAL	OPEN PO	YTD	REMAINING	PERCENT		....PROJECTED....	
ACTUAL		OBJ/SUB	BUDGET	& CONTRACTS	ACTUAL	BALANCE	PLAN	ACTUAL	OVER/UNDER	%
	SALARIES									
16,099	REGULAR WAGES	4000	140,664		95,077	45,587	67%	68%	1,951	1%
	DISASTER RECOVERY WAGE	4010								
209	OVERTIME	4300	1,000		1,260	(260)	67%	126%	890	89%
	DISASTER RECOVERY OVER	4310								
16,308	**SALARIES**		**141,664**		**96,337**	**45,327**	**67%**	**68%**	**2,841**	**2%**
	EMPLOYEE BENEFITS									
1,851	STATE RETIREMENT	4600	20,210		11,160	9,050	67%	55%	(3,470)	-17%
1,224	F.I.C.A. TAXES	4700	10,845		7,178	3,667	67%	66%	(77)	-1%
1,568	HOSPITALIZATION INS.	4800	15,660		7,000	8,660	67%	45%	(5,160)	-33%
	UNEMPLOYMENT BENEFITS	4900	1,600			1,600	67%	0%	(1,600)	-100%
	WORKMAN'S COMPENSATION	4910	2,000			2,000	67%	0%	(2,000)	-100%
4,642	**EMPLOYEE BENEFITS**		**50,315**		**25,338**	**24,977**	**67%**	**50%**	**(12,307)**	**-24%**
20,950	**PERSONAL SERVICES**		**191,979**		**121,676**	**70,303**	**67%**	**63%**	**(9,465)**	**-5%**
	OFFICE SUPPLIES									
	PAPER	5003								
	PRINTED FORMS	5005								
	OTHER EXPENDABLE OFF.S	5010	600		93	507	67%	16%	(460)	-77%
	MINOR OFFICE EQUIP/FUR	5020	600		21	579	67%	4%	(568)	-95%
	COMPUTER SUPPLIES	5080								
	OFFICE SUPPLIES		**1,200**		**114**	**1,086**	**67%**	**10%**	**(1,028)**	**-86%**
	OPERATING SUPPLIES									
	CLEANING/JANITORIAL SP	5100	300			300	67%	0%	(300)	-100%
	CHEMICALS	5130	50			50	67%	0%	(50)	-100%
18	GAS AND OIL	5250	1,200		273	927	67%	23%	(790)	-66%
	WEARING APPAREL	5355	500		90	410	67%	18%	(364)	-73%
	HORT./LANDSCAPING SPLY	5440								
	MINOR EQUIPMENT	5460	511		429	82	67%	84%	132	26%
	OTHER OPERATING MATL/S	5590	714		524	190	67%	73%	72	10%

			CITY OF HATTIESBURG							
	001560 - GENERAL FUND-PARKING OPER.		EXPENDITURE REPORT							
			8 Months Ending 05/31/13							
THIS MONTH			ANNUAL	OPEN PO	YTD	REMAINING	PERCENT		....PROJECTED....	
ACTUAL		OBJ/SUB	BUDGET	& CONTRACTS	ACTUAL	BALANCE	PLAN	ACTUAL	OVER/UNDER	%
18	**OPERATING SUPPLIES**		**3,275**		**1,316**	**1,959**	**67%**	**40%**	**(1,301)**	**-40%**
	REPAIR & MAINTENANCE SP									
	ELECTRICAL SUPPLIES	5605	1,500		555	945	67%	37%	(667)	-44%
	PAINT AND PAINTING SPL	5650	800		800		67%	100%	400	50%
	MTR VEHICLE REP. PTS/S	5700	475		2	473	67%	0%	(471)	-99%
---			---	---	---	---	---	---	---	---
	REPAIR & MAINTENANCE		**2,775**		**1,357**	**1,418**	**67%**	**49%**	**(739)**	**-27%**
---			---	---	---	---	---	---	---	---
18	**SUPPLIES AND EXPENSES**		**7,250**		**2,787**	**4,463**	**67%**	**38%**	**(3,069)**	**-42%**
	COMMUNICATIONS									
	TELEPHONE AND TELEGRAP	6060	47			47	67%	0%	(47)	-100%
	POSTAGE	6070								
---			---	---	---	---	---	---	---	---
	COMMUNICATIONS		**47**			**47**	**67%**	**0%**	**(47)**	**-100%**
	INSURANCE									
	PUBLIC LIAB/PROPERTY D	6255								
	AUTOMOBILE INSURANCE	6265								
---			---	---	---	---	---	---	---	---
	INSURANCE									
	UTILITIES									
1,128	ELECTRICITY	6305	18,050		9,010	9,040	67%	50%	(4,534)	-25%
---			---	---	---	---	---	---	---	---
1,128	**UTILITIES**		**18,050**		**9,010**	**9,040**	**67%**	**50%**	**(4,534)**	**-25%**
	REPR/MAINT-OUTSIDE LABO									
	BUILDING R&M	6350	39,747		3,219	36,528	67%	8%	(34,918)	-88%
	ELECTRICAL R&M	6355	50			50	67%	0%	(50)	-100%
	PLUMBING EQUIPMENT R&M	6357	50			50	67%	0%	(50)	-100%
	OFFICE EQUIPMENT R&M	6365	50			50	67%	0%	(50)	-100%
	FIXED EQUIPMENT R&M	6380	2,000			2,000	67%	0%	(2,000)	-100%
	MOTOR VEHICLE EQ. R&M	6384	2,000			2,000	67%	0%	(2,000)	-100%
	SIGN PAINTING	6396	500			500	67%	0%	(500)	-100%
	TOW IN CHARGES	6398	100		65	35	67%	65%	(2)	-2%
410	OTHER REPAIRS AND MAIN	6399	5,645		4,070	1,575	67%	72%	460	8%
---			---	---	---	---	---	---	---	---
410	**REPR/MAINT-OUTSIDE L**		**50,142**		**7,354**	**42,788**	**67%**	**15%**	**(39,110)**	**-78%**
	RENTALS									

			CITY OF HATTIESBURG							
	001560 - GENERAL FUND-PARKING OPER.		EXPENDITURE REPORT							
			8 Months Ending 05/31/13							
THIS MONTH			ANNUAL	OPEN PO	YTD	REMAINING	PERCENT		....PROJECTED....	
ACTUAL		OBJ/SUB	BUDGET	& CONTRACTS	ACTUAL	BALANCE	PLAN	ACTUAL	OVER/UNDER	%
1,477	PARKING GARAGE/LOT REN	6402	17,200		11,617	5,583	67%	68%	225	1%
	OTHER RENT	6449	100			100	67%	0%	(100)	-100%
---			---	---	---	---	---	---	---	---
1,477	**RENTALS**		**17,300**		**11,617**	**5,683**	**67%**	**67%**	**125**	**1%**
---			---	---	---	---	---	---	---	---
3,015	**OTHER SERVICES & CHAR**		**85,539**		**27,981**	**57,558**	**67%**	**33%**	**(43,567)**	**-51%**
	_____									
	LAND									
	LAND	7000	50,000		48,985	1,015	67%	98%	23,477	47%
	LEASEHOLDS	7020	10,000			10,000	67%	0%	(10,000)	-100%
---			---	---	---	---	---	---	---	---
	LAND		**60,000**		**48,985**	**11,015**	**67%**	**82%**	**13,477**	**22%**
	IMPROVEMENT OTHER THAN									
	FENCES/RAILINGS	7212								
	PARKING LOT/DRIVEWAY	7227								
	PARKING LOTS-GENERAL	7227 01								
	PINE ST GARAGE	7227 02								
---			---	---	---	---	---	---	---	---
	PARKING LOT/DRIVEWA									
---			---	---	---	---	---	---	---	---
	IMPROVEMENT OTHER TH									
	MACHINERY AND EQUIPMENT									
	OFFICE FURN/EQUIP.	7325								
---			---	---	---	---	---	---	---	---
	MACHINERY AND EQUIPM									
	VEHICLES									
	AUTOMOBILES	7400	20,000	18,171		1,829	67%	0%	(20,000)	-100%
---			---	---	---	---	---	---	---	---
	VEHICLES		**20,000**	**18,171**		**1,829**	**67%**	**0%**	**(20,000)**	**-100%**
---			---	---	---	---	---	---	---	---
	CAPITAL OUTLAY		**80,000**	**18,171**	**48,985**	**12,844**	**67%**	**61%**	**(6,522)**	**-8%**
---			---	---	---	---	---	---	---	---
23,984	**EXPENDITURES**		**364,768**	**18,171**	**201,429**	**145,168**	**67%**	**55%**	**(62,624)**	**-17%**

			CITY OF HATTIESBURG							
	002300 - PKS/REC-RECREATION MAINT. DIV.		EXPENDITURE REPORT							
			8 Months Ending 05/31/13							
THIS MONTH			ANNUAL	OPEN PO	YTD	REMAINING	PERCENT		....PROJECTED....	
ACTUAL		OBJ/SUB	BUDGET	& CONTRACTS	ACTUAL	BALANCE	PLAN	ACTUAL	OVER/UNDER	%
	_____									
	_____									
	SALARIES									
67,785	REGULAR WAGES	4000	691,703		418,093	273,610	67%	60%	(64,563)	-9%
	DISASTER RECOVERY WAGE	4010			3,928	(3,928)			5,892	
2,467	OVERTIME	4300	40,000		14,703	25,297	67%	37%	(17,945)	-45%
	DISASTER RECOVERY OVER	4310								
----------			---------	---------	---------	---------	-----	-----	--------	-----
70,251	**SALARIES**		**731,703**		**436,725**	**294,978**	**67%**	**60%**	**(76,615)**	**-10%**
	EMPLOYEE BENEFITS									
10,018	STATE RETIREMENT	4600	104,355		62,277	42,078	67%	60%	(10,939)	-10%
5,298	F.I.C.A. TAXES	4700	55,980		32,708	23,272	67%	58%	(6,918)	-12%
16,968	HOSPITALIZATION INS.	4800	161,820		88,748	73,072	67%	55%	(28,698)	-18%
	UNEMPLOYMENT BENEFITS	4900	4,100		52	4,048	67%	1%	(4,022)	-98%
	WORKMAN'S COMPENSATION	4910	25,026			25,026	67%	0%	(25,026)	-100%
----------			---------	---------	---------	---------	-----	-----	--------	-----
32,284	**EMPLOYEE BENEFITS**		**351,281**		**183,785**	**167,496**	**67%**	**52%**	**(75,603)**	**-22%**
----------			---------	---------	---------	---------	-----	-----	--------	-----
102,535	**PERSONAL SERVICES**		**1,082,984**		**620,510**	**462,474**	**67%**	**57%**	**(152,218)**	**-14%**
	_____									
	OFFICE SUPPLIES									
	PAPER	5003								
	PRINTED FORMS	5005								
	OTHER EXPENDABLE OFF.S	5010	1,800		1,741	59	67%	97%	811	45%
	MINOR OFFICE EQUIP/FUR	5020	600		412	188	67%	69%	18	3%
	PHOTO SUPPLIES	5040								
	BOOKS	5070								
	COMPUTER SUPPLIES	5080								
----------			---------	---------	---------	---------	-----	-----	--------	-----
	OFFICE SUPPLIES		**2,400**		**2,153**	**247**	**67%**	**90%**	**829**	**35%**
	OPERATING SUPPLIES									
2,320	CLEANING/JANITORIAL SP	5100	15,000		11,532	3,468	67%	77%	2,298	15%
	MEDICAL SUPPLIES	5120	250	108		142	67%	0%	(250)	-100%
5,672	CHEMICALS	5130	40,000		21,417	18,583	67%	54%	(7,874)	-20%
6,640	GAS AND OIL	5250	80,000		50,228	29,772	67%	63%	(4,658)	-6%
296	LUBRICANTS	5255	2,500		2,267	233	67%	91%	900	36%
289	DIESEL FUEL	5257	9,000		1,566	7,434	67%	17%	(6,650)	-74%

			CITY OF HATTIESBURG							
	002300 - PKS/REC-RECREATION MAINT. DIV.		EXPENDITURE REPORT							
			8 Months Ending 05/31/13							
THIS MONTH			ANNUAL	OPEN PO	YTD	REMAINING	PERCENT		....PROJECTED....	
ACTUAL		OBJ/SUB	BUDGET	& CONTRACTS	ACTUAL	BALANCE	PLAN	ACTUAL	OVER/UNDER	%
	WEARING APPAREL	5355	2,500	906	1,179	415	67%	47%	(731)	-29%
	ASPHALT & ASPHALT PROD	5400								
6	CONCRETE, CEMENT, ETC.	5405	1,000		301	699	67%	30%	(548)	-55%
2,818	SAND,CLAY,GRVL,FILL DI	5415	18,000		11,024	6,976	67%	61%	(1,464)	-8%
5,317	HORT./LANDSCAPING SPLY	5440	37,000	965	34,287	1,748	67%	93%	14,430	39%
177	HAND TOOLS	5450	2,500		2,129	371	67%	85%	693	28%
30	MINOR EQUIPMENT	5460	5,000		4,828	172	67%	97%	2,242	45%
3,211	RECREATIONAL SUPPLIES	5510	21,000	289	17,655	3,056	67%	84%	5,482	26%
1,120	OTHER OPERATING MATL/S	5590	6,000	1,290	3,507	1,203	67%	58%	(739)	-12%
387	OTHER OPER.MATLS-KAB	5591	7,000		5,382	1,618	67%	77%	1,073	15%
---			---	---	---	---	---	---	---	---
28,284	**OPERATING SUPPLIES**		**246,750**	**3,558**	**167,301**	**75,891**	**67%**	**68%**	**4,201**	**2%**
	REPAIR & MAINTENANCE SP									
134	BUILDING MATERIALS & S	5600	17,296	529	7,380	9,387	67%	43%	(6,226)	-36%
780	ELECTRICAL SUPPLIES	5605	10,000	553	8,486	961	67%	85%	2,729	27%
1,650	PLUMBING SUPPLIES	5610	10,000	161	8,673	1,165	67%	87%	3,009	30%
	STRUCTURAL STEEL & IRO	5620								
1,500	PAINT AND PAINTING SPL	5650	28,000	1,500	13,585	12,915	67%	49%	(7,622)	-27%
1,434	MTR VEHICLE REP. PTS/S	5700	11,000	54	6,705	4,240	67%	61%	(942)	-9%
	COMMUNICATION REPAIR P	5750	2,000		881	1,119	67%	44%	(678)	-34%
2,927	AGRICLTRL REPAIR PTS/S	5755	28,000	856	24,841	2,302	67%	89%	9,261	33%
	OTHER REPAIR/MAINT. SP	5990								
	VANDALISM REPAIR PARTS	5992	2,000		139	1,861	67%	7%	(1,791)	-90%
	REPR SPLY-8/29/05 STOR	5995								
---			---	---	---	---	---	---	---	---
8,426	**REPAIR & MAINTENANCE**		**108,296**	**3,653**	**70,690**	**33,951**	**67%**	**65%**	**(2,260)**	**-2%**
---			---	---	---	---	---	---	---	---
36,710	**SUPPLIES AND EXPENSES**		**357,446**	**7,211**	**240,144**	**110,089**	**67%**	**67%**	**2,770**	**1%**
	PROFESSIONAL SERVICES									
	CONSULTANT SERV/SURVEY	6020								
	OTHER PROFESSIONAL SER	6049								
---			---	---	---	---	---	---	---	---
	PROFESSIONAL SERVICE									
	COMMUNICATIONS									
154	TELEPHONE AND TELEGRAP	6060	750		1,434	(684)	67%	191%	1,401	187%
	POSTAGE	6070	450		23	427	67%	5%	(415)	-92%

			CITY OF HATTIESBURG							
	002300 - PKS/REC-RECREATION MAINT. DIV.		EXPENDITURE REPORT							
			8 Months Ending 05/31/13							
THIS MONTH			ANNUAL	OPEN PO	YTD	REMAINING	PERCENT		....PROJECTED....	
ACTUAL		OBJ/SUB	BUDGET	& CONTRACTS	ACTUAL	BALANCE	PLAN	ACTUAL	OVER/UNDER	%
154	**COMMUNICATIONS**		**1,200**		**1,457**	**(257)**	**67%**	**121%**	**985**	**82%**
	TRANSPORTATION									
	TRAVEL EXPENSE	6110	450			450	67%	0%	(450)	-100%
	FREIGHT	6120								
	TRANSPORTATION		**450**			**450**	**67%**	**0%**	**(450)**	**-100%**
	ADVERTISING									
	ADVERTISING	6150								
	ADVERTISING									
	PRINTING AND BINDING									
	PRINTING	6200	500		154	346	67%	31%	(268)	-54%
	PRINTING AND BINDING		**500**		**154**	**346**	**67%**	**31%**	**(268)**	**-54%**
	INSURANCE									
	PUBLIC LIAB/PROPERTY D	6255								
	AUTOMOBILE INSURANCE	6265								
	OTHER INSURANCE	6299								
	INSURANCE									
	UTILITIES									
	GAS	6300								
1,115	ELECTRICITY	6305	7,500		5,006	2,494	67%	67%	9	0%
1,115	**UTILITIES**		**7,500**		**5,006**	**2,494**	**67%**	**67%**	**9**	**0%**
	REPR/MAINT-OUTSIDE LABO									
	BUILDING R&M	6350	7,000		6,709	291	67%	96%	3,063	44%
	8/29/05 FACILITY REPRS	6351								
	8/29 WALKING TRL PW44	6351 01								
	8/29 DOLEAC VARI PWs	6351 02								
	8/29 ZOO FENCE PW3962	6351 03								
	8/29 TATUM PW1565	6351 04								
	8/29 DAHMER PW1554	6351 05								
	8/29 AFRICA EXH PW387	6351 06								
	8/29 DAHMER EQ PW4497	6351 07								
	8/29 DUNCAN LK PW1609	6351 08								

			CITY OF HATTIESBURG							
	002300 - PKS/REC-RECREATION MAINT. DIV.		EXPENDITURE REPORT							
			8 Months Ending 05/31/13							
THIS MONTH			ANNUAL	OPEN PO	YTD	REMAINING	PERCENT		....PROJECTED....	
ACTUAL		OBJ/SUB	BUDGET	& CONTRACTS	ACTUAL	BALANCE	PLAN	ACTUAL	OVER/UNDER	%
	8/29 JAYCEE PK PW1562	6351 09								
	8/29 ZOO TRACK PW5143	6351 10								
---			---	---	---	---	---	---	---	---
	8/29/05 FACILITY RE									
	8/29/05 STORM REPAIRS	6353								
3,500	ELECTRICAL R&M	6355	12,000		11,715	285	67%	98%	5,572	46%
	PLUMBING EQUIPMENT R&M	6357	200			200	67%	0%	(200)	-100%
	STREETS & STRUCTURES R	6360								
	OFFICE EQUIPMENT R&M	6365	150			150	67%	0%	(150)	-100%
3,038	FIXED EQUIPMENT R&M	6380	21,000	282	18,754	1,964	67%	89%	7,131	34%
130	MINOR EQUIPMENT R&M	6382	1,500		229	1,271	67%	15%	(1,156)	-77%
	MOTOR VEHICLE EQ. R&M	6384	11,500		3,328	8,172	67%	29%	(6,508)	-57%
1,349	AGRICULTURAL EQ. R&M	6387	9,000		8,434	566	67%	94%	3,651	41%
	COMMUNICATION EQ. R&M	6390	1,000		437	563	67%	44%	(344)	-34%
108	DISINFECT./EXTERMINATI	6394	3,300		681	2,619	67%	21%	(2,278)	-69%
116	SIGN PAINTING	6396	5,200	486	4,551	163	67%	88%	1,626	31%
	TOW IN CHARGES	6398	550		75	475	67%	14%	(437)	-79%
	OTHER REPAIRS AND MAIN	6399	2,000		164	1,836	67%	8%	(1,754)	-88%
---			---	---	---	---	---	---	---	---
8,241	**REPR/MAINT-OUTSIDE L**		**74,400**	**768**	**55,077**	**18,555**	**67%**	**74%**	**8,215**	**11%**
	RENTALS									
	MACHINERY RENT	6420	2,100		689	1,411	67%	33%	(1,066)	-51%
	CYLINDER RENT	6425								
592	UNIFORM RENT	6430	6,000		3,190	2,810	67%	53%	(1,214)	-20%
1,627	OTHER RENT	6449	5,750	2,250	2,632	869	67%	46%	(1,802)	-31%
---			---	---	---	---	---	---	---	---
2,219	**RENTALS**		**13,850**	**2,250**	**6,511**	**5,089**	**67%**	**47%**	**(4,083)**	**-29%**
	OTHER SERVICES & CHARGE									
	DUES AND MEMBERSHIPS	6840	650			650	67%	0%	(650)	-100%
	REGISTRATION FEE/TUITI	6845	2,650		1,494	1,156	67%	56%	(408)	-15%
250	CUSTODIAL SERVICE	6870	3,000		2,000	1,000	67%	67%		0%
6,173	SERVICES NOT SPECIFIED	6999	107,059	3,885	75,191	27,983	67%	70%	5,727	5%
---			---	---	---	---	---	---	---	---
6,423	**OTHER SERVICES & CHA**		**113,359**	**3,885**	**78,685**	**30,789**	**67%**	**69%**	**4,668**	**4%**
---			---	---	---	---	---	---	---	---
18,153	**OTHER SERVICES & CHAR**		**211,259**	**6,903**	**146,890**	**57,466**	**67%**	**70%**	**9,076**	**4%**

			CITY OF HATTIESBURG							
	002300 - PKS/REC-RECREATION MAINT. DIV.		EXPENDITURE REPORT							
			8 Months Ending 05/31/13							
THIS MONTH			ANNUAL	OPEN PO	YTD	REMAINING	PERCENT		....PROJECTED....	
ACTUAL		OBJ/SUB	BUDGET	& CONTRACTS	ACTUAL	BALANCE	PLAN	ACTUAL	OVER/UNDER	%
	BUILDING/BLD IMPROVEMEN									
	BUILDINGS	7100								
	DAHMER PARK	7100 08								
	TATUM PARK	7100 10								
	SAENGER BLD/JDS CTR.	7100 19								
---			---	---	---	---	---	---	---	---
	BUILDINGS									
	BUILDING IMPROVEMENTS	7150								
	REC.CENTER (OLD YMCA)	7150 10								
	BURGER CTR(6TH ST)	7150 12								
	GROUNDS MAINT,SHOP	7150 31								
	UNETTA STREET GYM	7150 36								
---			---	---	---	---	---	---	---	---
	BUILDING IMPROVEMEN									
---			---	---	---	---	---	---	---	---
	BUILDING/BLD IMPROVE									
	IMPROVEMENT OTHER THAN									
	PARKING LOT/DRIVEWAY	7227								
	PARK & PLAYGROUND LIGH	7240								
	SMOKEY HERRINGTON FIEL	7243								
	TRACKS	7244								
	JAYCEE BALLPK/WORLD SE	7248								
	LANDSCAPING	7250								
	MDOT-INTERCHANGE ENHA	7250 01								
	TREE RECOVERY (GRANT)	7250 02								
	DOWNTOWN LANDSCAPING	7250 03								
---			---	---	---	---	---	---	---	---
	LANDSCAPING									
	POOLS	7252								
	DAHMER POOL	7252 01								
	REC CENTER POOL	7252 02								
	5TH STREET POOL	7252 03								
	CITY PARK-BUSCHMAN	7252 04								
---			---	---	---	---	---	---	---	---
	POOLS									
	RECREATION IMPROVEMENT	7256								
	TATUM PARK	7256 01								

			CITY OF HATTIESBURG							
	002300 - PKS/REC-RECREATION MAINT. DIV.		EXPENDITURE REPORT							
			8 Months Ending 05/31/13							
THIS MONTH			ANNUAL	OPEN PO	YTD	REMAINING	PERCENT		....PROJECTED....	
ACTUAL		OBJ/SUB	BUDGET	& CONTRACTS	ACTUAL	BALANCE	PLAN	ACTUAL	OVER/UNDER	%
	PEOPLE'S PARK-PALMERS	7256 03								
	TIPTON STREET	7256 04								
	9TH STREET BALLPARK	7256 05								
	JAYCEE BALLPARK	7256 06								
	5TH STREET COMM. CTR.	7256 07								
	SAN ANTONIO SCORE BOO	7256 10								
	HOPE PARK	7256 11								
	MOBILE ST. POCKET PAR	7256 14								
---			---	---	---	---	---	---	---	---
	RECREATION IMPROVEM									
	OTHER IMPROVEMENTS	7295								
	KAMPER PK TENNIS/WLK	7295 03	48,390		48,363	27	67%	100%	24,154	50%
	THAMES ELEMENTARY	7295 05								
	TIMBERTON IMPROVEMENT	7295 13								
	PLAYGROUND IMPROVEMEN	7295 15								
	DAHMER PARK	7295 18								
	CAMERON FIELD	7295 19								
24,367	REC.FAC. - STORM DAMA	7295 40	249,528	18,155	214,095	17,277	67%	86%	71,614	29%
	DUNCAN LAKE	7295 42								
	CHAIN PARK	7295 43	88,000	16,458	71,007	535	67%	81%	18,510	21%
	VETERAN'S PARK	7295 46								
3,144	TATUM PARK/DIXIE YOUT	7295 49	245,000	3,175	55,104	186,721	67%	22%	(162,344)	-66%
	KATZ PARK WALL	7295 50								
	TOWN SQUARE PARK	7295 52								
14,400	MISC.OTHER IMPROVEMEN	7295 99	48,000		14,400	33,600	67%	30%	(26,400)	-55%
---			---	---	---	---	---	---	---	---
41,911	**OTHER IMPROVEMENTS**		**678,918**	**37,788**	**402,970**	**238,160**	**67%**	**59%**	**(74,462)**	**-11%**
---			---	---	---	---	---	---	---	---
41,911	**IMPROVEMENT OTHER TH**		**678,918**	**37,788**	**402,970**	**238,160**	**67%**	**59%**	**(74,462)**	**-11%**
	MACHINERY AND EQUIPMENT									
	8/29/05 STORM EQUIP	7302								
	OFFICE FURN/EQUIP.	7325								
	DATA PROCESSING EQUIP.	7327								
	AGRICULTURAL EQUIPMENT	7335	55,500		36,291	19,209	67%	65%	(1,063)	-2%
	RECREATIONAL EQUIPMENT	7350								
	COMMUNICATION EQUIPMEN	7355								
	OTHER EQUIPMENT	7399								

			CITY OF HATTIESBURG							
	002300 - PKS/REC-RECREATION MAINT. DIV.		EXPENDITURE REPORT							
			8 Months Ending 05/31/13							
THIS MONTH			ANNUAL	OPEN PO	YTD	REMAINING	PERCENT		....PROJECTED....	
ACTUAL		OBJ/SUB	BUDGET	& CONTRACTS	ACTUAL	BALANCE	PLAN	ACTUAL	OVER/UNDER	%
---			---	---	---	---	---	---	---	---
	MACHINERY AND EQUIPM		**55,500**		**36,291**	**19,209**	**67%**	**65%**	**(1,063)**	**-2%**
	VEHICLES									
	BUSES	7410								
	PICK UP TRUCKS	7420								
	SPECIAL TRUCKS	7450								
---			---	---	---	---	---	---	---	---
	VEHICLES									
---			---	---	---	---	---	---	---	---
41,911	**CAPITAL OUTLAY**		**734,418**	**37,788**	**439,261**	**257,369**	**67%**	**60%**	**(75,526)**	**-10%**
---			---	---	---	---	---	---	---	---
199,309	**EXPENDITURES**		**2,386,107**	**51,902**	**1,446,806**	**887,398**	**67%**	**61%**	**(215,897)**	**-9%**

			CITY OF HATTIESBURG							
	002315 - PKS/REC-REC.ADMIN/COM.REL.		EXPENDITURE REPORT							
			8 Months Ending 05/31/13							
THIS MONTH			ANNUAL	OPEN PO	YTD	REMAINING	PERCENT		....PROJECTED....	
ACTUAL		OBJ/SUB	BUDGET	& CONTRACTS	ACTUAL	BALANCE	PLAN	ACTUAL	OVER/UNDER	%
	_____									
	_____									
	SALARIES									
29,449	REGULAR WAGES	4000	373,341		175,165	198,176	67%	47%	(110,593)	-30%
	DISASTER RECOVERY WAGE	4010								
	OVERTIME	4300			66	(66)			99	
	DISASTER RECOVERY OVER	4310								
---			---	---	---	---	---	---	---	---
29,449	**SALARIES**		**373,341**		**175,230**	**198,111**	**67%**	**47%**	**(110,495)**	**-30%**
	EMPLOYEE BENEFITS									
4,158	STATE RETIREMENT	4600	49,465		24,946	24,519	67%	50%	(12,045)	-24%
2,170	F.I.C.A. TAXES	4700	28,610		12,814	15,796	67%	45%	(9,388)	-33%
4,300	HOSPITALIZATION INS.	4800	36,540		22,536	14,004	67%	62%	(2,736)	-7%
	UNEMPLOYMENT BENEFITS	4900	1,000			1,000	67%	0%	(1,000)	-100%
	WORKMAN'S COMPENSATION	4910	9,480			9,480	67%	0%	(9,480)	-100%
---			---	---	---	---	---	---	---	---
10,628	**EMPLOYEE BENEFITS**		**125,095**		**60,296**	**64,799**	**67%**	**48%**	**(34,651)**	**-28%**
---			---	---	---	---	---	---	---	---
40,076	**PERSONAL SERVICES**		**498,436**		**235,526**	**262,910**	**67%**	**47%**	**(145,146)**	**-29%**
	_____									
	OFFICE SUPPLIES									
	PAPER	5003	350		231	119	67%	66%	(3)	-1%
	PRINTED FORMS	5005	455			455	67%	0%	(455)	-100%
879	OTHER EXPENDABLE OFF.S	5010	2,200		1,982	218	67%	90%	773	35%
	MINOR OFFICE EQUIP/FUR	5020								
	SUBSCRIPTIONS,MAGS,MAP	5050								
	BOOKS	5070								
	COMPUTER SUPPLIES	5080	800		541	259	67%	68%	11	1%
---			---	---	---	---	---	---	---	---
879	**OFFICE SUPPLIES**		**3,805**		**2,754**	**1,051**	**67%**	**72%**	**326**	**9%**
	OPERATING SUPPLIES									
	CLEANING/JANITORIAL SP	5100								
	HOUSEHOLD SUPPLIES	5110								
	FOOD	5115	100			100	67%	0%	(100)	-100%
	MEDICAL SUPPLIES	5120	100			100	67%	0%	(100)	-100%
	CHEMICALS	5130	8,500	6,029		2,471	67%	0%	(8,500)	-100%
	SERVE-SAFE SUPPLIES	5155	200			200	67%	0%	(200)	-100%

			CITY OF HATTIESBURG							
	002315 - PKS/REC-REC.ADMIN/COM.REL.		EXPENDITURE REPORT							
			8 Months Ending 05/31/13							
THIS MONTH			ANNUAL	OPEN PO	YTD	REMAINING	PERCENT		....PROJECTED....	
ACTUAL		OBJ/SUB	BUDGET	& CONTRACTS	ACTUAL	BALANCE	PLAN	ACTUAL	OVER/UNDER	%
661	GAS AND OIL	5250	11,800		5,735	6,065	67%	49%	(3,197)	-27%
	LUBRICANTS	5255								
	OTHER FUEL	5260								
441	WEARING APPAREL	5355	1,200		1,026	174	67%	86%	339	28%
	CONCRETE, CEMENT, ETC.	5405								
	SAND,CLAY,GRVL,FILL DI	5415								
	HORT./LANDSCAPING SPLY	5440								
169	MINOR EQUIPMENT	5460	2,250	1,323	313	614	67%	14%	(1,780)	-79%
8,029	RECREATIONAL SUPPLIES	5510	65,673	1,487	40,669	23,517	67%	62%	(4,669)	-7%
	MDSE FOR RESALE	5520	8,725			8,725	67%	0%	(8,725)	-100%
	CERAMIC SUP.FOR RESALE	5521								
	OTHER OPERATING MATL/S	5590	850			850	67%	0%	(850)	-100%
---			---	---	---	---	---	---	---	---
9,300	**OPERATING SUPPLIES**		**99,398**	**8,839**	**47,743**	**42,816**	**67%**	**48%**	**(27,783)**	**-28%**
	REPAIR & MAINTENANCE SP									
	BUILDING MATERIALS & S	5600	300			300	67%	0%	(300)	-100%
	ELECTRICAL SUPPLIES	5605								
	PLUMBING SUPPLIES	5610								
	STRUCTURAL STEEL & IRO	5620								
	PAINT AND PAINTING SPL	5650	150			150	67%	0%	(150)	-100%
157	MTR VEHICLE REP. PTS/S	5700	1,037		494	543	67%	48%	(295)	-28%
	RECREATIONAL EQ. REP P	5765								
---			---	---	---	---	---	---	---	---
157	**REPAIR & MAINTENANCE**		**1,487**		**494**	**993**	**67%**	**33%**	**(745)**	**-50%**
---			---	---	---	---	---	---	---	---
10,335	**SUPPLIES AND EXPENSES**		**104,690**	**8,839**	**50,991**	**44,860**	**67%**	**49%**	**(28,203)**	**-27%**
	_____									
	PROFESSIONAL SERVICES									
	ARCHITECTURAL	6012								
	CONSULTANT SERV/SURVEY	6020								
	CONTRACTUAL PROGRAMS	6032								
14,242	OFFICIALS	6034	98,700		65,456	33,244	67%	66%	(516)	-1%
15,100	OTHER PROFESSIONAL SER	6049	180,084		106,125	73,960	67%	59%	(20,896)	-12%
---			---	---	---	---	---	---	---	---
29,342	**PROFESSIONAL SERVICE**		**278,784**		**171,581**	**107,204**	**67%**	**62%**	**(21,412)**	**-8%**
	COMMUNICATIONS									
50	TELEPHONE AND TELEGRAP	6060	1,760		525	1,235	67%	30%	(972)	-55%

			CITY OF HATTIESBURG							
	002315 - PKS/REC-REC.ADMIN/COM.REL.		EXPENDITURE REPORT							
			8 Months Ending 05/31/13							
THIS MONTH			ANNUAL	OPEN PO	YTD	REMAINING	PERCENT		....PROJECTED....	
ACTUAL		OBJ/SUB	BUDGET	& CONTRACTS	ACTUAL	BALANCE	PLAN	ACTUAL	OVER/UNDER	%
	POSTAGE	6070								
---			---	---	---	---	---	---	---	---
50	**COMMUNICATIONS**		**1,760**		**525**	**1,235**	**67%**	**30%**	**(972)**	**-55%**
	TRANSPORTATION									
	TRAVEL EXPENSE	6110	650			650	67%	0%	(650)	-100%
	CONTRACT TRAVEL	6115								
	FREIGHT	6120								
	MESSENGER/EXPRESS SERV	6130								
---			---	---	---	---	---	---	---	---
	TRANSPORTATION		**650**			**650**	**67%**	**0%**	**(650)**	**-100%**
	ADVERTISING									
	ADVERTISING	6150								
	ADVERTISING-SPEC. EVEN	6152								
	ADVERTISING-SENIOR FAR	6154	2,940	1,250		1,690	67%	0%	(2,940)	-100%
---			---	---	---	---	---	---	---	---
	ADVERTISING		**2,940**	**1,250**		**1,690**	**67%**	**0%**	**(2,940)**	**-100%**
	PRINTING AND BINDING									
	PRINTING	6200	100			100	67%	0%	(100)	-100%
	FILM PROCESSING	6240								
---			---	---	---	---	---	---	---	---
	PRINTING AND BINDING		**100**			**100**	**67%**	**0%**	**(100)**	**-100%**
	INSURANCE									
	PUBLIC LIAB/PROPERTY D	6255								
	BOILER MACHINERY	6260								
	OTHER INSURANCE	6299								
---			---	---	---	---	---	---	---	---
	INSURANCE									
	UTILITIES									
61	GAS	6300	4,700		1,402	3,298	67%	30%	(2,596)	-55%
13,594	ELECTRICITY	6305	150,000		91,797	58,203	67%	61%	(12,304)	-8%
---			---	---	---	---	---	---	---	---
13,654	**UTILITIES**		**154,700**		**93,199**	**61,501**	**67%**	**60%**	**(14,901)**	**-10%**
	REPR/MAINT-OUTSIDE LABO									
	BUILDING R&M	6350	1,000		400	600	67%	40%	(400)	-40%
	ELECTRICAL R&M	6355								
	PLUMBING EQUIPMENT R&M	6357	300			300	67%	0%	(300)	-100%
	OFFICE EQUIPMENT R&M	6365	1,700			1,700	67%	0%	(1,700)	-100%

			CITY OF HATTIESBURG							
	002315 - PKS/REC-REC.ADMIN/COM.REL.		EXPENDITURE REPORT							
			8 Months Ending 05/31/13							
THIS MONTH			ANNUAL	OPEN PO	YTD	REMAINING	PERCENT		....PROJECTED....	
ACTUAL		OBJ/SUB	BUDGET	& CONTRACTS	ACTUAL	BALANCE	PLAN	ACTUAL	OVER/UNDER	%
	HOUSEHOLD EQUIPMENT R&	6370								
	FIXED EQUIPMENT R&M	6380								
	MINOR EQUIPMENT R&M	6382	250			250	67%	0%	(250)	-100%
	MOTOR VEHICLE EQ. R&M	6384	800		773	27	67%	97%	359	45%
	RECREATIONAL EQ. R&M	6388								
	COMMUNICATION EQ. R&M	6390								
378	DISINFECT./EXTERMINATI	6394	1,700		1,134	566	67%	67%	1	0%
	SIGN PAINTING	6396	200			200	67%	0%	(200)	-100%
	TOW IN CHARGES	6398								
	OTHER REPAIRS AND MAIN	6399								
---			---	---	---	---	---	---	---	---
378	**REPR/MAINT-OUTSIDE L**		**5,950**		**2,307**	**3,643**	**67%**	**39%**	**(2,489)**	**-42%**
	RENTALS									
	LAND RENT	6400								
	MACHINERY RENT	6420								
	CYLINDER RENT	6425								
	MOP-MAT-RAG-RENT	6435								
800	OTHER RENT	6449	800		800		67%	100%	400	50%
---			---	---	---	---	---	---	---	---
800	**RENTALS**		**800**		**800**		**67%**	**100%**	**400**	**50%**
	OTHER SERVICES & CHARGE									
307	PROP.TAX COLL. FEES .0	6830	5,000		2,143	2,857	67%	43%	(1,785)	-36%
72	PROP.TAX COLL. FEES.00	6831	4,000		3,375	625	67%	84%	1,062	27%
	DUES AND MEMBERSHIPS	6840	500			500	67%	0%	(500)	-100%
	REGISTRATION FEE/TUITI	6845	1,500		609-	2,109	67%	41%	(586)	-39%
	CONTRACT COACHES	6852								
	DAY CAMP COUNSELORS	6855								
	CUSTODIAL SERVICE	6870								
	SERVICES NOT SPECIFIED	6999	200			200	67%	0%	(200)	-100%
---			---	---	---	---	---	---	---	---
379	**OTHER SERVICES & CHA**		**11,200**		**4,909**	**6,291**	**67%**	**44%**	**(3,836)**	**-34%**
---			---	---	---	---	---	---	---	---
44,603	**OTHER SERVICES & CHAR**		**456,884**	**1,250**	**273,321**	**182,313**	**67%**	**60%**	**(46,902)**	**-10%**
	IMPROVEMENT OTHER THAN									
	PARKING LOT/DRIVEWAY	7227								
	OTHER IMPROVEMENTS	7295								

			CITY OF HATTIESBURG							
	002315 - PKS/REC-REC.ADMIN/COM.REL.		EXPENDITURE REPORT							
			8 Months Ending 05/31/13							
THIS MONTH			ANNUAL	OPEN PO	YTD	REMAINING	PERCENT		....PROJECTED....	
ACTUAL		OBJ/SUB	BUDGET	& CONTRACTS	ACTUAL	BALANCE	PLAN	ACTUAL	OVER/UNDER	%
----------			---------	---------	---------	---------	-----	-----	--------	-----
	IMPROVEMENT OTHER TH									
	MACHINERY AND EQUIPMENT									
	OFFICE FURN/EQUIP.	7325								
	DATA PROCESSING EQUIP.	7327								
	RECREATIONAL EQUIPMENT	7350								
	COMMUNICATION EQUIPMEN	7355								
----------			---------	---------	---------	---------	-----	-----	--------	-----
	MACHINERY AND EQUIPM									
	VEHICLES									
	PICK UP TRUCKS	7420								
----------			---------	---------	---------	---------	-----	-----	--------	-----
	VEHICLES									
----------			---------	---------	---------	---------	-----	-----	--------	-----
	CAPITAL OUTLAY									
----------			---------	---------	---------	---------	-----	-----	--------	-----
95,015	**EXPENDITURES**		**1,060,010**	**10,089**	**559,838**	**490,083**	**67%**	**53%**	**(220,252)**	**-21%**

			CITY OF HATTIESBURG							
	002341 - PKS/REC-KAMPER PARK ZOO DIV.		EXPENDITURE REPORT							
			8 Months Ending 05/31/13							
THIS MONTH			ANNUAL	OPEN PO	YTD	REMAINING	PERCENT		....PROJECTED....	
ACTUAL		OBJ/SUB	BUDGET	& CONTRACTS	ACTUAL	BALANCE	PLAN	ACTUAL	OVER/UNDER	%
	_____									
	_____									
	SALARIES									
	REGULAR WAGES	4000								
	DISASTER RECOVERY WAGE	4010								
	OVERTIME	4300								
	DISASTER RECOVERY OVER	4310								
----------			---------	---------	---------	---------	-----	-----	--------	-----
	SALARIES									
	EMPLOYEE BENEFITS									
	STATE RETIREMENT	4600								
	F.I.C.A. TAXES	4700								
	HOSPITALIZATION INS.	4800								
	UNEMPLOYMENT BENEFITS	4900								
	WORKMAN'S COMPENSATION	4910								
----------			---------	---------	---------	---------	-----	-----	--------	-----
	EMPLOYEE BENEFITS									
----------			---------	---------	---------	---------	-----	-----	--------	-----
	PERSONAL SERVICES									
	_____									
	OFFICE SUPPLIES									
	PAPER	5003								
	PRINTED FORMS	5005								
	OTHER EXPENDABLE OFF.S	5010								
	MINOR OFFICE EQUIP/FUR	5020								
	PHOTO SUPPLIES	5040								
	SUBSCRIPTIONS,MAGS,MAP	5050								
	BOOKS	5070								
----------			---------	---------	---------	---------	-----	-----	--------	-----
	OFFICE SUPPLIES									
	OPERATING SUPPLIES									
	CLEANING/JANITORIAL SP	5100								
	HOUSEHOLD SUPPLIES	5110								
	MEDICAL SUPPLIES	5120								
	CHEMICALS	5130								
	FEED FOR ANIMALS	5150								
	ANIMAL SUPPLIES	5160								

			CITY OF HATTIESBURG							
	002341 - PKS/REC-KAMPER PARK ZOO DIV.		EXPENDITURE REPORT							
			8 Months Ending 05/31/13							
THIS MONTH			ANNUAL	OPEN PO	YTD	REMAINING	PERCENT		....PROJECTED....	
ACTUAL		OBJ/SUB	BUDGET	& CONTRACTS	ACTUAL	BALANCE	PLAN	ACTUAL	OVER/UNDER	%
	GAS AND OIL	5250								
	LUBRICANTS	5255								
	DIESEL FUEL	5257								
	OTHER FUEL	5260								
	WEARING APPAREL	5355								
	CONCRETE, CEMENT, ETC.	5405								
	SAND,CLAY,GRVL,FILL DI	5415								
	HORT./LANDSCAPING SPLY	5440								
	HAND TOOLS	5450								
	MINOR EQUIPMENT	5460								
	RECREATIONAL SUPPLIES	5510								
	CONCESSION SUPPLIES	5515								
	MDSE FOR RESALE-GIFTSH	5520								
	MDSE FOR RESALE-CONCES	5522								
	TRAFFIC SIGNS	5545								
	OTHER OPERATING MATL/S	5590								
----------			---------	---------	---------	---------	-----	-----	--------	-----
	OPERATING SUPPLIES									
	REPAIR & MAINTENANCE SP									
	BUILDING MATERIALS & S	5600								
	ELECTRICAL SUPPLIES	5605								
	PLUMBING SUPPLIES	5610								
	STRUCTURAL STEEL & IRO	5620								
	PAINT AND PAINTING SPL	5650								
	MTR VEHICLE REP. PTS/S	5700								
	COMMUNICATION REPAIR P	5750								
	AGRICLTRL REPAIR PTS/S	5755								
	RECREATIONAL EQ. REP P	5765								
	OTHER REPAIR/MAINT. SP	5990								
----------			---------	---------	---------	---------	-----	-----	--------	-----
	REPAIR & MAINTENANCE									
----------			---------	---------	---------	---------	-----	-----	--------	-----
	SUPPLIES AND EXPENSES									
	_____									
	PROFESSIONAL SERVICES									
	VETERINARIAN	6030								
	OTHER PROFESSIONAL SER	6049								

			CITY OF HATTIESBURG							
	002341 - PKS/REC-KAMPER PARK ZOO DIV.		EXPENDITURE REPORT							
			8 Months Ending 05/31/13							
THIS MONTH			ANNUAL	OPEN PO	YTD	REMAINING	PERCENT		....PROJECTED....	
ACTUAL		OBJ/SUB	BUDGET	& CONTRACTS	ACTUAL	BALANCE	PLAN	ACTUAL	OVER/UNDER	%
	OTHER PROF SERV-KPZ CO	6049 98								
----------			---------	---------	---------	---------	-----	-----	--------	-----
	PROFESSIONAL SERVICE									
	COMMUNICATIONS									
	TELEPHONE AND TELEGRAP	6060								
	POSTAGE	6070								
----------			---------	---------	---------	---------	-----	-----	--------	-----
	COMMUNICATIONS									
	TRANSPORTATION									
	TRAVEL EXPENSE	6110								
	FREIGHT	6120								
	MESSENGER/EXPRESS SERV	6130								
----------			---------	---------	---------	---------	-----	-----	--------	-----
	TRANSPORTATION									
	ADVERTISING									
	ADVERTISING	6150								
----------			---------	---------	---------	---------	-----	-----	--------	-----
	ADVERTISING									
	PRINTING AND BINDING									
	PRINTING	6200								
	FILM PROCESSING	6240								
----------			---------	---------	---------	---------	-----	-----	--------	-----
	PRINTING AND BINDING									
	INSURANCE									
	PUBLIC LIAB/PROPERTY D	6255								
	BOILER MACHINERY	6260								
	AUTOMOBILE INSURANCE	6265								
----------			---------	---------	---------	---------	-----	-----	--------	-----
	INSURANCE									
	UTILITIES									
	GAS	6300								
	ELECTRICITY	6305								
----------			---------	---------	---------	---------	-----	-----	--------	-----
	UTILITIES									
	REPR/MAINT-OUTSIDE LABO									
	BUILDING R&M	6350								
	ELECTRICAL R&M	6355								

			CITY OF HATTIESBURG							
	002341 - PKS/REC-KAMPER PARK ZOO DIV.		EXPENDITURE REPORT							
			8 Months Ending 05/31/13							
THIS MONTH			ANNUAL	OPEN PO	YTD	REMAINING	PERCENT		....PROJECTED....	
ACTUAL		OBJ/SUB	BUDGET	& CONTRACTS	ACTUAL	BALANCE	PLAN	ACTUAL	OVER/UNDER	%
	PLUMBING EQUIPMENT R&M	6357								
	OFFICE EQUIPMENT R&M	6365								
	HOUSEHOLD EQUIPMENT R&	6370								
	FIXED EQUIPMENT R&M	6380								
	MINOR EQUIPMENT R&M	6382								
	MOTOR VEHICLE EQ. R&M	6384								
	AGRICULTURAL EQ. R&M	6387								
	RECREATIONAL EQ. R&M	6388								
	COMMUNICATION EQ. R&M	6390								
	DISINFECT./EXTERMINATI	6394								
	SIGN PAINTING	6396								
	TOW IN CHARGES	6398								
	OTHER REPAIRS AND MAIN	6399								
---			---	---	---	---	---	---	---	---
	REPR/MAINT-OUTSIDE L									
	RENTALS									
	LAND RENT	6400								
	BUILDING RENT	6405								
	MACHINERY RENT	6420								
	CYLINDER RENT	6425								
	UNIFORM RENT	6430								
	MOP-MAT-RAG RENT	6435								
	OTHER RENT	6449								
---			---	---	---	---	---	---	---	---
	RENTALS									
	OTHER SERVICES & CHARGE									
	THEFT LOSS	6818								
	DUES AND MEMBERSHIPS	6840								
	REGISTRATION FEE/TUITI	6845								
	CUSTODIAL SERVICE	6870								
	SALES TAX-KPZ RIDES	6996								
	SERVICES NOT SPECIFIED	6999								
---			---	---	---	---	---	---	---	---
	OTHER SERVICES & CHA									
---			---	---	---	---	---	---	---	---
	OTHER SERVICES & CHAR									
	_____									

			CITY OF HATTIESBURG							
	002341 - PKS/REC-KAMPER PARK ZOO DIV.		EXPENDITURE REPORT							
			8 Months Ending 05/31/13							
THIS MONTH			ANNUAL	OPEN PO	YTD	REMAINING	PERCENT		....PROJECTED....	
ACTUAL		OBJ/SUB	BUDGET	& CONTRACTS	ACTUAL	BALANCE	PLAN	ACTUAL	OVER/UNDER	%
	BUILDING/BLD IMPROVEMEN									
	BUILDINGS	7100								
	K.P CONCESSION STAND	7100 06								
	REHAB. EXISTING BLDGS	7100 12								
----------			---------	---------	---------	---------	-----	-----	--------	-----
	BUILDINGS									
	BUILDING IMPROVEMENTS	7150								
	ED CENTER HOLDING ARE	7150 08								
----------			---------	---------	---------	---------	-----	-----	--------	-----
	BUILDING IMPROVEMEN									
----------			---------	---------	---------	---------	-----	-----	--------	-----
	BUILDING/BLD IMPROVE									
	IMPROVEMENT OTHER THAN									
	PARKING LOT/DRIVEWAY	7227								
	STREETS & ROADWAYS	7230								
	PARK & PLAYGROUND LIGH	7240								
	LANDSCAPING	7250								
	OTHER IMPROVEMENTS	7295								
	TIGER EXHIBIT	7295 14								
	ZEBRA EXHIBIT	7295 17								
	SMALL ANIMAL EXHIBITS	7295 23								
	AFRICAN EXHIBIT	7295 25								
	PRAIRIE DOG EXHIBIT	7295 48								
	MISC.OTHER IMPROVEMEN	7295 99								
----------			---------	---------	---------	---------	-----	-----	--------	-----
	OTHER IMPROVEMENTS									
----------			---------	---------	---------	---------	-----	-----	--------	-----
	IMPROVEMENT OTHER TH									
	MACHINERY AND EQUIPMENT									
	HOUSEHOLD FURN/EQUIP.	7320								
	DATA PROCESSING EQUIP.	7327								
	AGRICULTURAL EQUIPMENT	7335								
	RECREATIONAL EQUIPMENT	7350								
	COMMUNICATION EQUIPMEN	7355								
	OTHER EQUIPMENT	7399								
----------			---------	---------	---------	---------	-----	-----	--------	-----
	MACHINERY AND EQUIPM									

			CITY OF HATTIESBURG							
	002341 - PKS/REC-KAMPER PARK ZOO DIV.		EXPENDITURE REPORT							
			8 Months Ending 05/31/13							
THIS MONTH			ANNUAL	OPEN PO	YTD	REMAINING	PERCENT		....PROJECTED....	
ACTUAL		OBJ/SUB	BUDGET	& CONTRACTS	ACTUAL	BALANCE	PLAN	ACTUAL	OVER/UNDER	%
	VEHICLES									
	AUTOMOBILES	7400								
	PICK UP TRUCKS	7420								
----------			---------	---------	---------	---------	-----	-----	--------	-----
	VEHICLES									
	OTHER									
	ZOOLOGICAL ANIMALS	7505								
----------			---------	---------	---------	---------	-----	-----	--------	-----
	OTHER									
----------			---------	---------	---------	---------	-----	-----	--------	-----
	CAPITAL OUTLAY									
----------			---------	---------	---------	---------	-----	-----	--------	-----
	EXPENDITURES									

			CITY OF HATTIESBURG							
	004369 - LIBRARY FUND EXPENDITURES		EXPENDITURE REPORT							
			8 Months Ending 05/31/13							
THIS MONTH			ANNUAL	OPEN PO	YTD	REMAINING	PERCENT		....PROJECTED....	
ACTUAL		OBJ/SUB	BUDGET	& CONTRACTS	ACTUAL	BALANCE	PLAN	ACTUAL	OVER/UNDER	%
	_____									
	_____									
	OTHER SERVICES & CHARGE									
299	PROP.TAX COLL. FEES .0	6830			2,087	(2,087)			3,130	
70	PROP.TAX COLL. FEES.00	6831			3,287	(3,287)			4,930	
----------			---------	---------	---------	---------	-----	-----	--------	-----
369	**OTHER SERVICES & CHA**				**5,374**	**(5,374)**			**8,061**	
----------			---------	---------	---------	---------	-----	-----	--------	-----
369	**OTHER SERVICES & CHAR**				**5,374**	**(5,374)**			**8,061**	
----------			---------	---------	---------	---------	-----	-----	--------	-----
369	**EXPENDITURES**				**5,374**	**(5,374)**			**8,061**	

			CITY OF HATTIESBURG							
	005160 - H.M.F.P.FUND-FIRE DIVISION		EXPENDITURE REPORT							
			8 Months Ending 05/31/13							
THIS MONTH			ANNUAL	OPEN PO	YTD	REMAINING	PERCENT		....PROJECTED....	
ACTUAL		OBJ/SUB	BUDGET	& CONTRACTS	ACTUAL	BALANCE	PLAN	ACTUAL	OVER/UNDER	%
	OFFICE SUPPLIES									
	MINOR OFFICE EQUIP/FUR	5020	3,000		2,363	637	67%	79%	544	18%
	PUBLIC EDUCATION MAT'L	5032	1,500			1,500	67%	0%	(1,500)	-100%
---			---	---	---	---	---	---	---	---
	OFFICE SUPPLIES		**4,500**		**2,363**	**2,137**	**67%**	**53%**	**(955)**	**-21%**
	OPERATING SUPPLIES									
	GAS AND OIL	5250								
11,501	WEARING APPAREL	5355	64,000		11,501	52,499	67%	18%	(46,748)	-73%
	MINOR EQUIPMENT	5460								
	MINOR FIRE FIGHTING EQ	5462								
	HAZ.MAT SUPPLIES	5466								
	FIRE HOSE	5470								
	SFTY/FIRE P/MATL CONTR	5535	1,500		1,048	452	67%	70%	72	5%
	OTHER OPER.MATLS-USM	5590								
---			---	---	---	---	---	---	---	---
11,501	**OPERATING SUPPLIES**		**65,500**		**12,549**	**52,951**	**67%**	**19%**	**(46,676)**	**-71%**
	REPAIR & MAINTENANCE SP									
	MTR VEHICLE REP. PTS/S	5700								
	COMMUNICATION REPAIR P	5750								
	MINOR COMPUTER EQUIP.	5800	2,000		1,458	542	67%	73%	187	9%
---			---	---	---	---	---	---	---	---
	REPAIR & MAINTENANCE		**2,000**		**1,458**	**542**	**67%**	**73%**	**187**	**9%**
---			---	---	---	---	---	---	---	---
11,501	**SUPPLIES AND EXPENSES**		**72,000**		**16,370**	**55,630**	**67%**	**23%**	**(47,444)**	**-66%**
	OTHER PROFESSIONAL SER	6049	19,000		6,405	12,595	67%	34%	(9,392)	-49%
	TRANSPORTATION									
	TRAVEL EXPENSE	6110								
---			---	---	---	---	---	---	---	---
	TRANSPORTATION									
	REPR/MAINT-OUTSIDE LABO									
	BUILDING R&M (USM)	6350								
	MOTOR VEHICLE EQ. R&M	6384	5,000			5,000	67%	0%	(5,000)	-100%
	COMMUNICATION EQ. R&M	6390								
---			---	---	---	---	---	---	---	---

			CITY OF HATTIESBURG							
	005160 - H.M.F.P.FUND-FIRE DIVISION		EXPENDITURE REPORT							
			8 Months Ending 05/31/13							
THIS MONTH			ANNUAL	OPEN PO	YTD	REMAINING	PERCENT		....PROJECTED....	
ACTUAL		OBJ/SUB	BUDGET	& CONTRACTS	ACTUAL	BALANCE	PLAN	ACTUAL	OVER/UNDER	%
	REPR/MAINT-OUTSIDE L		**5,000**			**5,000**	**67%**	**0%**	**(5,000)**	**-100%**
	OTHER SERVICES & CHARGE									
	BANK SERV/TRF FEE	6832								
656	REGISTRATION FEE/TUITI	6845	20,500		18,626	1,874	67%	91%	7,439	36%
---			---	---	---	---	---	---	---	---
656	**OTHER SERVICES & CHA**		**20,500**		**18,626**	**1,874**	**67%**	**91%**	**7,439**	**36%**
---			---	---	---	---	---	---	---	---
656	**OTHER SERVICES & CHAR**		**44,500**		**25,030**	**19,470**	**67%**	**56%**	**(6,954)**	**-16%**
	_____									
	LAND									
	LAND	7000								
---			---	---	---	---	---	---	---	---
	LAND									
	BUILDING/BLD IMPROVEMEN									
	BUILDINGS	7100								
	FIRE DRILL TOWER	7100 02	20,000			20,000	67%	0%	(20,000)	-100%
	FIRE STATIONS	7100 20	241,861			241,861	67%	0%	(241,861)	-100%
---			---	---	---	---	---	---	---	---
	BUILDINGS		**261,861**			**261,861**	**67%**	**0%**	**(261,861)**	**-100%**
	BUILDING IMPROVEMENTS	7150								
	FIRE STA IMPR-USM MON	7150 30								
---			---	---	---	---	---	---	---	---
	BUILDING IMPROVEMEN									
---			---	---	---	---	---	---	---	---
	BUILDING/BLD IMPROVE		**261,861**			**261,861**	**67%**	**0%**	**(261,861)**	**-100%**
	IMPROVEMENT OTHER THAN									
	PARKING LOT/DRIVEWAY	7227								
	LANDSCAPING	7250								
	OTHER IMPROVEMENTS	7295								
	OTHER IMPROVEMENTS-USM	7297	6,900			6,900	67%	0%	(6,900)	-100%
---			---	---	---	---	---	---	---	---
	IMPROVEMENT OTHER TH		**6,900**			**6,900**	**67%**	**0%**	**(6,900)**	**-100%**
	MACHINERY AND EQUIPMENT									
	FIRE FIGHTING	7315	20,000		17,500	2,500	67%	88%	6,250	31%
	HOUSEHOLD FURN/EQUIP.	7320								
	OFFICE FURN/EQUIP.	7325								
3,180	DATA PROCESSING EQUIP.	7327	40,000		8,934	31,066	67%	22%	(26,598)	-66%

			CITY OF HATTIESBURG							
	005160 - H.M.F.P.FUND-FIRE DIVISION		EXPENDITURE REPORT							
			8 Months Ending 05/31/13							
THIS MONTH			ANNUAL	OPEN PO	YTD	REMAINING	PERCENT		....PROJECTED....	
ACTUAL		OBJ/SUB	BUDGET	& CONTRACTS	ACTUAL	BALANCE	PLAN	ACTUAL	OVER/UNDER	%
	AGRICULTURAL EQUIPMENT	7335								
	COMMUNICATION EQUIPMEN	7355	56,728		10,745	45,983	67%	19%	(40,610)	-72%
	COMMUNICATION EQ-USM	7356								
	HYDRANTS & METERS(USM)	7365	10,000			10,000	67%	0%	(10,000)	-100%
	OTHER EQUIP-USM MONIES	7398								
	OTHER EQUIPMENT	7399	35,000			35,000	67%	0%	(35,000)	-100%
---			---	---	---	---	---	---	---	---
3,180	**MACHINERY AND EQUIPM**		**161,728**		**37,179**	**124,549**	**67%**	**23%**	**(105,959)**	**-66%**
	VEHICLES									
	AUTOMOBILES	7400								
	MOTORCYCLES	7405								
	BUSES	7410								
	PICK UP TRUCKS	7420								
	HEAVY TRUCKS	7430								
	FIRE TRUCKS	7435								
---			---	---	---	---	---	---	---	---
	VEHICLES									
---			---	---	---	---	---	---	---	---
3,180	**CAPITAL OUTLAY**		**430,489**		**37,179**	**393,310**	**67%**	**9%**	**(374,720)**	**-87%**
---			---	---	---	---	---	---	---	---
15,337	**EXPENDITURES**		**546,989**		**78,579**	**468,410**	**67%**	**14%**	**(429,120)**	**-78%**

			CITY OF HATTIESBURG							
	005460 - H.M.F.P.FUND-CAPITAL LEASES		EXPENDITURE REPORT							
			8 Months Ending 05/31/13							
THIS MONTH			ANNUAL	OPEN PO	YTD	REMAINING	PERCENT		....PROJECTED....	
ACTUAL		OBJ/SUB	BUDGET	& CONTRACTS	ACTUAL	BALANCE	PLAN	ACTUAL	OVER/UNDER	%
	_____									
	_____									
	CAPITAL LEASE PAYMENTS									
	MDB-BLDG-FIRE STA #8	8515								
	FIRE TRUCKS LEASE-A'04	8527								
	FIRE TRUCKS LEASE-B'04	8528								
	FIRE TRUCKS LEASE-'06	8529								
	FIRE PROT.EQUIP.LEASE	8530								
12,421	FIRE TRUCKS LEASE-'11	8532	148,560		98,581	49,979	67%	66%	(688)	0%
---			---	---	---	---	---	---	---	---
12,421	**CAPITAL LEASE PAYMEN**		**148,560**		**98,581**	**49,979**	**67%**	**66%**	**(688)**	**0%**
	INTEREST ON CAPITAL LEA									
	MDB-BLDG-FIRE STA #8	8615								
	FIRE TRUCKS LEASE-A'04	8627								
	FIRE TRUCKS LEASE-B'04	8628								
	FIRE TRUCKS LEASE-'06	8629								
	FIRE PROT.EQUIP.LEASE	8630								
1,919	FIRE TRUCKS LEASE-'11	8632	23,540		16,144	7,396	67%	69%	676	3%
---			---	---	---	---	---	---	---	---
1,919	**INTEREST ON CAPITAL**		**23,540**		**16,144**	**7,396**	**67%**	**69%**	**676**	**3%**
---			---	---	---	---	---	---	---	---
14,341	**DEBT SERVICE**		**172,100**		**114,725**	**57,375**	**67%**	**67%**	**(12)**	**0%**
---			---	---	---	---	---	---	---	---
14,341	**EXPENDITURES**		**172,100**		**114,725**	**57,375**	**67%**	**67%**	**(12)**	**0%**

			CITY OF HATTIESBURG							
	008201 - SPEC.ST.IMPR-STREET DIV.		EXPENDITURE REPORT							
			8 Months Ending 05/31/13							
THIS MONTH			ANNUAL	OPEN PO	YTD	REMAINING	PERCENT		....PROJECTED....	
ACTUAL		OBJ/SUB	BUDGET	& CONTRACTS	ACTUAL	BALANCE	PLAN	ACTUAL	OVER/UNDER	%
	_____									
	_____									
	OPERATING SUPPLIES									
	CHEMICALS	5130								
	GAS AND OIL	5250								
	LUBRICANTS	5255								
	OTHER FUEL	5260								
	ASPHALT & ASPHALT PROD	5400								
	CONCRETE, CEMENT, ETC.	5405								
	BRICK,STONE,MORTAR,ETC	5410								
	SAND,CLAY,GRVL,FILL DI	5415								
	DRAINAGE PIPE & CULVER	5420								
	HORT./LANDSCAPING SPLY	5440								
	MINOR EQUIPMENT	5460								
	TRAFFIC CONTROL EQ. SP	5540								
----------			---------	---------	---------	---------	-----	-----	--------	-----
	OPERATING SUPPLIES									
	REPAIR & MAINTENANCE SP									
	BUILDING MATERIALS & S	5600								
	PLUMBING SUPPLIES	5610								
	STRUCTURAL STEEL & IRO	5620								
----------			---------	---------	---------	---------	-----	-----	--------	-----
	REPAIR & MAINTENANCE									
----------			---------	---------	---------	---------	-----	-----	--------	-----
	SUPPLIES AND EXPENSES									
	_____									
	PROFESSIONAL SERVICES									
	OTHER PROFESSIONAL SER	6049								
----------			---------	---------	---------	---------	-----	-----	--------	-----
	PROFESSIONAL SERVICE									
	REPR/MAINT-OUTSIDE LABO									
	STREETS & STRUCTURES R	6360	261,000			261,000	67%	0%	(261,000)	-100%
----------			---------	---------	---------	---------	-----	-----	--------	-----
	REPR/MAINT-OUTSIDE L		**261,000**			**261,000**	**67%**	**0%**	**(261,000)**	**-100%**
----------			---------	---------	---------	---------	-----	-----	--------	-----
	OTHER SERVICES & CHAR		**261,000**			**261,000**	**67%**	**0%**	**(261,000)**	**-100%**
	_____									

			CITY OF HATTIESBURG							
	008201 - SPEC.ST.IMPR-STREET DIV.		EXPENDITURE REPORT							
			8 Months Ending 05/31/13							
THIS MONTH			ANNUAL	OPEN PO	YTD	REMAINING	PERCENT		....PROJECTED....	
ACTUAL		OBJ/SUB	BUDGET	& CONTRACTS	ACTUAL	BALANCE	PLAN	ACTUAL	OVER/UNDER	%
	LAND									
	LAND	7000								
	EASEMENTS	7010								
	STREETS & ROADWAYS	7230								
	4TH STREET	7230 09								
	LINCOLN RD-FAUS-#1	7230 12								
	LINCOLN RD-FAUS-#2	7230 17								
	LINCOLN RD-FAUS-#3	7230 27								
	LINCOLN RD-FAUS-#4	7230 29								
	CLASSIC DR-FAUS	7230 36								
	SOUTH 28TH-FAUS	7230 37								
	WALMART/TIF PROJECT	7230 80								
----------			---------	---------	---------	---------	-----	-----	--------	-----
	STREETS & ROADWAYS									
----------			---------	---------	---------	---------	-----	-----	--------	-----
	LAND									
----------			---------	---------	---------	---------	-----	-----	--------	-----
	CAPITAL OUTLAY									
----------			---------	---------	---------	---------	-----	-----	--------	-----
	EXPENDITURES		**261,000**			**261,000**	**67%**	**0%**	**(261,000)**	**-100%**

			CITY OF HATTIESBURG							
	009660 - W&S O&M-CUSTOMER ACCT.DIV.		EXPENDITURE REPORT							
			8 Months Ending 05/31/13							
THIS MONTH			ANNUAL	OPEN PO	YTD	REMAINING	PERCENT		....PROJECTED....	
ACTUAL		OBJ/SUB	BUDGET	& CONTRACTS	ACTUAL	BALANCE	PLAN	ACTUAL	OVER/UNDER	%
	_____									
	_____									
	SALARIES									
29,560	REGULAR WAGES	4000	264,352		155,229	109,123	67%	59%	(31,508)	-12%
	DISASTER RECOVERY WAGE	4010			7	(7)			10	
131	OVERTIME	4300	1,000		551	449	67%	55%	(173)	-17%
	DISASTER RECOVERY OVER	4310								
---			---	---	---	---	---	---	---	---
29,690	**SALARIES**		**265,352**		**155,787**	**109,565**	**67%**	**59%**	**(31,671)**	**-12%**
	EMPLOYEE BENEFITS									
4,234	STATE RETIREMENT	4600	37,700		22,215	15,485	67%	59%	(4,377)	-12%
2,231	F.I.C.A. TAXES	4700	20,230		11,596	8,634	67%	57%	(2,836)	-14%
5,340	HOSPITALIZATION INS.	4800	62,640		27,844	34,796	67%	44%	(20,874)	-33%
	UNEMPLOYMENT BENEFITS	4900								
	WORKMAN'S COMPENSATION	4910	5,798			5,798	67%	0%	(5,798)	-100%
---			---	---	---	---	---	---	---	---
11,804	**EMPLOYEE BENEFITS**		**126,368**		**61,656**	**64,712**	**67%**	**49%**	**(33,884)**	**-27%**
---			---	---	---	---	---	---	---	---
41,495	**PERSONAL SERVICES**		**391,720**		**217,443**	**174,277**	**67%**	**56%**	**(65,555)**	**-17%**
	_____									
	OFFICE SUPPLIES									
	PAPER	5003	2,500	218	1,416	866	67%	57%	(376)	-15%
	PRINTED FORMS	5005								
	OTHER EXPENDABLE OFF.S	5010	1,648	164	1,394	90	67%	85%	443	27%
	MINOR OFFICE EQUIP/FUR	5020	475		411	64	67%	87%	141	30%
	BOOKS	5070	475		285	190	67%	60%	(47)	-10%
---			---	---	---	---	---	---	---	---
	OFFICE SUPPLIES		**5,098**	**382**	**3,506**	**1,210**	**67%**	**69%**	**161**	**3%**
	OPERATING SUPPLIES									
	CLEANING/JANITORIAL SP	5100	300		123	177	67%	41%	(115)	-38%
	MEDICAL SUPPLIES	5120								
1,162	GAS AND OIL	5250	8,005		7,180	825	67%	90%	2,765	35%
	LUBRICANTS	5255								
	CONCRETE, CEMENT, ETC.	5405								
	HAND TOOLS	5450	3,145		3,145		67%	100%	1,572	50%
	MINOR EQUIPMENT	5460	150		46	104	67%	31%	(80)	-53%
	METER LOCKS	5467	749		678	71	67%	91%	268	36%

			CITY OF HATTIESBURG							
	009660 - W&S O&M-CUSTOMER ACCT.DIV.		EXPENDITURE REPORT							
			8 Months Ending 05/31/13							
THIS MONTH			ANNUAL	OPEN PO	YTD	REMAINING	PERCENT		....PROJECTED....	
ACTUAL		OBJ/SUB	BUDGET	& CONTRACTS	ACTUAL	BALANCE	PLAN	ACTUAL	OVER/UNDER	%
20	OTHER OPERATING MATL/S	5590	300	35	253	12	67%	84%	79	26%
1,182	**OPERATING SUPPLIES**		**12,649**	**35**	**11,424**	**1,190**	**67%**	**90%**	**4,487**	**35%**
	REPAIR & MAINTENANCE SP									
	ELECTRICAL SUPPLIES	5605	285	105	38	142	67%	13%	(227)	-80%
115	MTR VEHICLE REP. PTS/S	5700	2,000	188	1,567	246	67%	78%	350	18%
	COMMUNICATION REPAIR P	5750	486		90	396	67%	19%	(350)	-72%
	OTHER REPAIR/MAINT. SP	5990	450		245	205	67%	54%	(82)	-18%
115	**REPAIR & MAINTENANCE**		**3,221**	**293**	**1,939**	**989**	**67%**	**60%**	**(312)**	**-10%**
1,297	**SUPPLIES AND EXPENSES**		**20,968**	**710**	**16,869**	**3,389**	**67%**	**80%**	**4,335**	**21%**
	PROFESSIONAL SERVICES									
3,139	AUDITING AND ACCOUNTIN	6010	15,000		11,139	3,861	67%	74%	1,708	11%
	APPRAISAL	6017								
	LEGAL	6025								
	MEDICAL	6027								
889	OTHER PROFESSIONAL SER	6049	21,200		14,211	6,989	67%	67%	116	1%
4,028	**PROFESSIONAL SERVICE**		**36,200**		**25,349**	**10,851**	**67%**	**70%**	**1,823**	**5%**
	COMMUNICATIONS									
405	TELEPHONE AND TELEGRAP	6060	5,220		478	4,742	67%	9%	(4,502)	-86%
3,950	POSTAGE	6070	49,000		28,650	20,350	67%	58%	(6,024)	-12%
4,355	**COMMUNICATIONS**		**54,220**		**29,128**	**25,092**	**67%**	**54%**	**(10,528)**	**-19%**
	TRANSPORTATION									
	FREIGHT	6120	95			95	67%	0%	(95)	-100%
	TRANSPORTATION		**95**			**95**	**67%**	**0%**	**(95)**	**-100%**
	ADVERTISING									
	ADVERTISING	6150	95			95	67%	0%	(95)	-100%
	ADVERTISING		**95**			**95**	**67%**	**0%**	**(95)**	**-100%**
	PRINTING AND BINDING									
	PRINTING	6200	9,825		2,375	7,450	67%	24%	(6,262)	-64%

			CITY OF HATTIESBURG							
	009660 - W&S O&M-CUSTOMER ACCT.DIV.		EXPENDITURE REPORT							
			8 Months Ending 05/31/13							
THIS MONTH			ANNUAL	OPEN PO	YTD	REMAINING	PERCENT		....PROJECTED....	
ACTUAL		OBJ/SUB	BUDGET	& CONTRACTS	ACTUAL	BALANCE	PLAN	ACTUAL	OVER/UNDER	%
	PRINTING AND BINDING		**9,825**		**2,375**	**7,450**	**67%**	**24%**	**(6,262)**	**-64%**
	INSURANCE									
	AUTOMOBILE INSURANCE	6265								
---			---	---	---	---	---	---	---	---
	INSURANCE									
	UTILITIES									
13	GAS	6300	1,900		745	1,155	67%	39%	(782)	-41%
474	ELECTRICITY	6305	5,500		2,905	2,595	67%	53%	(1,142)	-21%
---			---	---	---	---	---	---	---	---
487	**UTILITIES**		**7,400**		**3,650**	**3,750**	**67%**	**49%**	**(1,924)**	**-26%**
	REPR/MAINT-OUTSIDE LABO									
	BUILDING R&M	6350	3,800			3,800	67%	0%	(3,800)	-100%
	OFFICE EQUIPMENT R&M	6365	2,050		1,976	74	67%	96%	914	45%
	FIXED EQUIPMENT R&M	6380	2,495		2,495		67%	100%	1,247	50%
	MOTOR VEHICLE EQ. R&M	6384	8,000		65	7,935	67%	1%	(7,902)	-99%
	COMMUNICATION EQ. R&M	6390	1,000		460	540	67%	46%	(310)	-31%
54	DISINFECT./EXTERMINATI	6394	800		310	491	67%	39%	(334)	-42%
(65)	OTHER REPAIRS AND MAIN	6399	1,045			1,045	67%	0%	(1,045)	-100%
---			---	---	---	---	---	---	---	---
(11)	**REPR/MAINT-OUTSIDE L**		**19,190**		**5,306**	**13,885**	**67%**	**28%**	**(11,230)**	**-59%**
	RENTALS									
	BUILDING RENT	6405								
	OFFICE EQUIPMENT RENT	6410								
	UNIFORM RENT	6430	1,100			1,100	67%	0%	(1,100)	-100%
	MOP-MAT-RAG RENT	6435								
	OTHER RENT	6449								
---			---	---	---	---	---	---	---	---
	RENTALS		**1,100**			**1,100**	**67%**	**0%**	**(1,100)**	**-100%**
	OTHER SERVICES & CHARGE									
	CASH OVERAGE/SHORTAGE	6819								
	BANK SERV/TRF FEE	6832	190			190	67%	0%	(190)	-100%
	REFUNDS	6835								
	WATER RELATED REFUND	6835 WTR								
---			---	---	---	---	---	---	---	---
	REFUNDS									
	NSF CHECKS	6836								
	DUES AND MEMBERSHIPS	6840								

			CITY OF HATTIESBURG							
	009660 - W&S O&M-CUSTOMER ACCT.DIV.		EXPENDITURE REPORT							
			8 Months Ending 05/31/13							
THIS MONTH			ANNUAL	OPEN PO	YTD	REMAINING	PERCENT		....PROJECTED....	
ACTUAL		OBJ/SUB	BUDGET	& CONTRACTS	ACTUAL	BALANCE	PLAN	ACTUAL	OVER/UNDER	%
	REGISTRATION FEE/TUITI	6845	190			190	67%	0%	(190)	-100%
	SERVICES NOT SPECIFIED	6999	5,525			5,525	67%	0%	(5,525)	-100%
---			---	---	---	---	---	---	---	---
	OTHER SERVICES & CHA		**5,905**			**5,905**	**67%**	**0%**	**(5,905)**	**-100%**
---			---	---	---	---	---	---	---	---
8,858	**OTHER SERVICES & CHAR**		**134,030**		**65,808**	**68,222**	**67%**	**49%**	**(35,318)**	**-26%**
	_____									
	BUILDING/BLD IMPROVEMEN									
	BUILDING IMPROVEMENTS	7150								
	WATER OFFICE RENOVATI	7150 16								
---			---	---	---	---	---	---	---	---
	BUILDING IMPROVEMEN									
---			---	---	---	---	---	---	---	---
	BUILDING/BLD IMPROVE									
	MACHINERY AND EQUIPMENT									
	OFFICE FURN/EQUIP.	7325								
	DATA PROCESSING EQUIP.	7327	8,000		7,672	328	67%	96%	3,508	44%
	WATER UTILITY SOFTWARE	7329								
	CONSTRUCTION EQUIPMENT	7345								
	COMMUNICATION EQUIPMEN	7355								
	OTHER EQUIPMENT	7399								
---			---	---	---	---	---	---	---	---
	MACHINERY AND EQUIPM		**8,000**		**7,672**	**328**	**67%**	**96%**	**3,508**	**44%**
	VEHICLES									
	AUTOMOBILES	7400								
	PICK UP TRUCKS	7420	20,000	18,150		1,850	67%	0%	(20,000)	-100%
	SPECIAL TRUCKS	7450								
---			---	---	---	---	---	---	---	---
	VEHICLES		**20,000**	**18,150**		**1,850**	**67%**	**0%**	**(20,000)**	**-100%**
---			---	---	---	---	---	---	---	---
	CAPITAL OUTLAY		**28,000**	**18,150**	**7,672**	**2,178**	**67%**	**27%**	**(16,492)**	**-59%**
---			---	---	---	---	---	---	---	---
51,651	**EXPENDITURES**		**574,718**	**18,860**	**307,792**	**248,066**	**67%**	**54%**	**(113,030)**	**-20%**

			CITY OF HATTIESBURG							
	009672 - W&S O&M-WATER TRANSMISSION DIV		EXPENDITURE REPORT							
			8 Months Ending 05/31/13							
THIS MONTH			ANNUAL	OPEN PO	YTD	REMAINING	PERCENT		....PROJECTED....	
ACTUAL		OBJ/SUB	BUDGET	& CONTRACTS	ACTUAL	BALANCE	PLAN	ACTUAL	OVER/UNDER	%
	_____									
	_____									
	SALARIES									
44,676	REGULAR WAGES	4000	474,921		259,388	215,533	67%	55%	(85,839)	-18%
	DISASTER RECOVERY WAGE	4010			200	(200)			300	
4,531	OVERTIME	4300	24,000		28,058	(4,058)	67%	117%	18,087	75%
	DISASTER RECOVERY OVER	4310								
---			---	---	---	---	---	---	---	---
49,207	**SALARIES**		**498,921**		**287,645**	**211,276**	**67%**	**58%**	**(67,453)**	**-14%**
	EMPLOYEE BENEFITS									
6,963	STATE RETIREMENT	4600	71,290		40,638	30,652	67%	57%	(10,332)	-14%
3,714	F.I.C.A. TAXES	4700	38,250		21,629	16,621	67%	57%	(5,806)	-15%
12,808	HOSPITALIZATION INS.	4800	104,400		52,384	52,016	67%	50%	(25,824)	-25%
	UNEMPLOYMENT BENEFITS	4900	4,000		945	3,055	67%	24%	(2,582)	-65%
	WORKMAN'S COMPENSATION	4910	20,760			20,760	67%	0%	(20,760)	-100%
---			---	---	---	---	---	---	---	---
23,485	**EMPLOYEE BENEFITS**		**238,700**		**115,595**	**123,105**	**67%**	**48%**	**(65,307)**	**-27%**
---			---	---	---	---	---	---	---	---
72,692	**PERSONAL SERVICES**		**737,621**		**403,240**	**334,381**	**67%**	**55%**	**(132,761)**	**-18%**
	_____									
	OFFICE SUPPLIES									
	PAPER	5003								
	PRINTED FORMS	5005								
	OTHER EXPENDABLE OFF.S	5010								
	MINOR OFFICE EQUIP/FUR	5020								
	SUBSCRIPTIONS,MAGS,MAP	5050								
---			---	---	---	---	---	---	---	---
	OFFICE SUPPLIES									
	OPERATING SUPPLIES									
	CLEANING/JANITORIAL SP	5100								
	MEDICAL SUPPLIES	5120								
	CHEMICALS	5130								
5,367	GAS AND OIL	5250	78,000		48,549	29,451	67%	62%	(5,176)	-7%
	NATURAL GAS FUEL	5252								
	LUBRICANTS	5255								
317	DIESEL FUEL	5257	8,000		2,595	5,405	67%	32%	(4,107)	-51%
	WEARING APPAREL	5355	300		169	131	67%	56%	(46)	-15%

			CITY OF HATTIESBURG							
	009672 - W&S O&M-WATER TRANSMISSION DIV		EXPENDITURE REPORT							
			8 Months Ending 05/31/13							
THIS MONTH			ANNUAL	OPEN PO	YTD	REMAINING	PERCENT		....PROJECTED....	
ACTUAL		OBJ/SUB	BUDGET	& CONTRACTS	ACTUAL	BALANCE	PLAN	ACTUAL	OVER/UNDER	%
	ASPHALT & ASPHALT PROD	5400								
	CONCRETE, CEMENT, ETC.	5405	9,000		8,127	873	67%	90%	3,190	35%
	BRICK,STONE,MORTAR,ETC	5410								
1,150	SAND,CLAY,GRVL,FILL DI	5415	8,000		3,450	4,550	67%	43%	(2,824)	-35%
	HORT./LANDSCAPING SPLY	5440								
103	HAND TOOLS	5450	1,800		1,395	405	67%	78%	292	16%
	MINOR EQUIPMENT	5460	2,500		1,794	706	67%	72%	191	8%
	HYDRANT PARTS	5480	1,000			1,000	67%	0%	(1,000)	-100%
	METER PARTS	5485	500			500	67%	0%	(500)	-100%
	VALVE PARTS	5490								
	PUMPING EQUIPMENT PART	5495								
	OTHER OPERATING MATL/S	5590	500		134	366	67%	27%	(298)	-60%
---			---	---	---	---	---	---	---	---
6,937	**OPERATING SUPPLIES**		**109,600**		**66,213**	**43,387**	**67%**	**60%**	**(10,280)**	**-9%**
	REPAIR & MAINTENANCE SP									
	BUILDING MATERIALS & S	5600								
	ELECTRICAL SUPPLIES	5605								
6,127	PLUMBING SUPPLIES	5610	45,000	543	29,445	15,012	67%	65%	(832)	-2%
	STRUCTURAL STEEL & IRO	5620								
	PAINT AND PAINTING SPL	5650	1,000		537	463	67%	54%	(194)	-19%
604	MTR VEHICLE REP. PTS/S	5700	16,000	213	7,560	8,227	67%	47%	(4,660)	-29%
	COMMUNICATION REPAIR P	5750								
	EXPENDABLE WELDING SPL	5770								
	OTHER REPAIR/MAINT. SP	5990	1,000		120	880	67%	12%	(820)	-82%
---			---	---	---	---	---	---	---	---
6,731	**REPAIR & MAINTENANCE**		**63,000**	**756**	**37,661**	**24,583**	**67%**	**60%**	**(6,508)**	**-10%**
---			---	---	---	---	---	---	---	---
13,668	**SUPPLIES AND EXPENSES**		**172,600**	**756**	**103,874**	**67,970**	**67%**	**60%**	**(16,788)**	**-10%**
	PROFESSIONAL SERVICES									
	ENGINEERING	6015								
	ABSTRACTING & RECORDIN	6023								
	MEDICAL	6027								
	OTHER PROFESSIONAL SER	6049								
---			---	---	---	---	---	---	---	---
	PROFESSIONAL SERVICE									
	COMMUNICATIONS									

			CITY OF HATTIESBURG							
	009672 - W&S O&M-WATER TRANSMISSION DIV		EXPENDITURE REPORT							
			8 Months Ending 05/31/13							
THIS MONTH			ANNUAL	OPEN PO	YTD	REMAINING	PERCENT		....PROJECTED....	
ACTUAL		OBJ/SUB	BUDGET	& CONTRACTS	ACTUAL	BALANCE	PLAN	ACTUAL	OVER/UNDER	%
	POSTAGE	6070								
---			---	---	---	---	---	---	---	---
	COMMUNICATIONS									
	TRANSPORTATION									
	TRAVEL EXPENSE	6110								
	FREIGHT	6120								
---			---	---	---	---	---	---	---	---
	TRANSPORTATION									
	ADVERTISING									
	ADVERTISING	6150								
---			---	---	---	---	---	---	---	---
	ADVERTISING									
	PRINTING AND BINDING									
	PRINTING	6200								
---			---	---	---	---	---	---	---	---
	PRINTING AND BINDING									
	INSURANCE									
	PUBLIC LIAB/PROPERTY D	6255								
	AUTOMOBILE INSURANCE	6265								
---			---	---	---	---	---	---	---	---
	INSURANCE									
	REPR/MAINT-OUTSIDE LABO									
	BUILDING R&M	6350								
	ELECTRICAL R&M	6355								
	PLUMBING EQUIPMENT R&M	6357								
66,379	STREETS & STRUCTURES R	6360	525,000		264,733	260,267	67%	50%	(127,900)	-24%
	FIXED EQUIPMENT R&M	6380								
	MINOR EQUIPMENT R&M	6382	1,000		26	974	67%	3%	(960)	-96%
1,462	MOTOR VEHICLE EQ. R&M	6384	13,000		10,708	2,292	67%	82%	3,062	24%
	CONSTRUCTION EQUIP R&M	6386	5,000		383	4,617	67%	8%	(4,425)	-89%
	COMMUNICATION EQ. R&M	6390								
	TOW IN CHARGES	6398	1,000		755	245	67%	76%	132	13%
	OTHER REPAIRS AND MAIN	6399								
---			---	---	---	---	---	---	---	---
67,841	**REPR/MAINT-OUTSIDE L**		**545,000**		**276,605**	**268,395**	**67%**	**51%**	**(130,092)**	**-24%**
	RENTALS									
	MACHINERY RENT	6420	500			500	67%	0%	(500)	-100%

			CITY OF HATTIESBURG							
	009672 - W&S O&M-WATER TRANSMISSION DIV		EXPENDITURE REPORT							
			8 Months Ending 05/31/13							
THIS MONTH			ANNUAL	OPEN PO	YTD	REMAINING	PERCENT		....PROJECTED....	
ACTUAL		OBJ/SUB	BUDGET	& CONTRACTS	ACTUAL	BALANCE	PLAN	ACTUAL	OVER/UNDER	%
	CYLINDER RENT	6425								
220	UNIFORM RENT	6430	5,000		1,488	3,512	67%	30%	(2,768)	-55%
	OTHER RENT	6449								
---			---	---	---	---	---	---	---	---
220	**RENTALS**		**5,500**		**1,488**	**4,012**	**67%**	**27%**	**(3,268)**	**-59%**
	OTHER SERVICES & CHARGE									
	SETTLEMT OF DAMAGE CLA	6700								
	DUES AND MEMBERSHIPS	6840								
	REGISTRATION FEE/TUITI	6845								
	SERVICES NOT SPECIFIED	6999								
---			---	---	---	---	---	---	---	---
	OTHER SERVICES & CHA									
---			---	---	---	---	---	---	---	---
68,061	**OTHER SERVICES & CHAR**		**550,500**		**278,093**	**272,407**	**67%**	**51%**	**(133,360)**	**-24%**
	_____									
	LEASEHOLDS	7020								
	BUILDING/BLD IMPROVEMEN									
	BUILDING IMPROVEMENTS	7150								
---			---	---	---	---	---	---	---	---
	BUILDING/BLD IMPROVE									
	IMPROVEMENT OTHER THAN									
	OTHER IMPROVEMENTS	7295								
---			---	---	---	---	---	---	---	---
	IMPROVEMENT OTHER TH									
	MACHINERY AND EQUIPMENT									
	DATA PROCESSING EQUIP.	7327								
	CONSTRUCTION EQUIPMENT	7345								
	COMMUNICATION EQUIPMEN	7355								
	HYDRANTS & METERS	7365	40,000		10,726	29,274	67%	27%	(23,910)	-60%
	PIPE	7370								
	OTHER EQUIPMENT	7399								
---			---	---	---	---	---	---	---	---
	MACHINERY AND EQUIPM		**40,000**		**10,726**	**29,274**	**67%**	**27%**	**(23,910)**	**-60%**
	VEHICLES									
	AUTOMOBILES	7400								
	PICK UP TRUCKS	7420								
	SPECIAL TRUCKS	7450								

			CITY OF HATTIESBURG							
	009672 - W&S O&M-WATER TRANSMISSION DIV		EXPENDITURE REPORT							
			8 Months Ending 05/31/13							
THIS MONTH			ANNUAL	OPEN PO	YTD	REMAINING	PERCENT		....PROJECTED....	
ACTUAL		OBJ/SUB	BUDGET	& CONTRACTS	ACTUAL	BALANCE	PLAN	ACTUAL	OVER/UNDER	%
----------			---------	---------	---------	---------	-----	-----	--------	-----
	VEHICLES									
----------			---------	---------	---------	---------	-----	-----	--------	-----
	CAPITAL OUTLAY		**40,000**		**10,726**	**29,274**	**67%**	**27%**	**(23,910)**	**-60%**
----------			---------	---------	---------	---------	-----	-----	--------	-----
154,421	**EXPENDITURES**		**1,500,721**	**756**	**795,933**	**704,032**	**67%**	**53%**	**(306,821)**	**-20%**

			CITY OF HATTIESBURG							
	009673 - W&S O&M-WATER PLANT DIVISION		EXPENDITURE REPORT							
			8 Months Ending 05/31/13							
THIS MONTH			ANNUAL	OPEN PO	YTD	REMAINING	PERCENT		....PROJECTED....	
ACTUAL		OBJ/SUB	BUDGET	& CONTRACTS	ACTUAL	BALANCE	PLAN	ACTUAL	OVER/UNDER	%
	_____									
	_____									
	SALARIES									
38,851	REGULAR WAGES	4000	360,781		238,580	122,201	67%	66%	(2,911)	-1%
	DISASTER RECOVERY WAGE	4010								
2,758	OVERTIME	4300	18,000		18,739	(739)	67%	104%	10,108	56%
	DISASTER RECOVERY OVER	4310								
----------			---------	---------	---------	---------	-----	-----	--------	-----
41,609	**SALARIES**		**378,781**		**257,319**	**121,462**	**67%**	**68%**	**7,197**	**2%**
	EMPLOYEE BENEFITS									
5,933	STATE RETIREMENT	4600	54,020		36,694	17,326	67%	68%	1,021	2%
3,111	F.I.C.A. TAXES	4700	28,979		19,108	9,871	67%	66%	(317)	-1%
10,044	HOSPITALIZATION INS.	4800	80,940		51,172	29,768	67%	63%	(4,182)	-5%
	UNEMPLOYMENT BENEFITS	4900	5,580		2,548	3,032	67%	46%	(1,758)	-32%
	WORKMAN'S COMPENSATION	4910	9,476			9,476	67%	0%	(9,476)	-100%
----------			---------	---------	---------	---------	-----	-----	--------	-----
19,088	**EMPLOYEE BENEFITS**		**178,995**		**109,522**	**69,473**	**67%**	**61%**	**(14,711)**	**-8%**
----------			---------	---------	---------	---------	-----	-----	--------	-----
60,697	**PERSONAL SERVICES**		**557,776**		**366,841**	**190,936**	**67%**	**66%**	**(7,514)**	**-1%**
	_____									
	OFFICE SUPPLIES									
	PAPER	5003	300		280	20	67%	93%	120	40%
	PRINTED FORMS	5005	3,000			3,000	67%	0%	(3,000)	-100%
90	OTHER EXPENDABLE OFF.S	5010	2,000		689	1,311	67%	34%	(966)	-48%
	MINOR OFFICE EQUIP/FUR	5020	1,000		211	789	67%	21%	(683)	-68%
	SUBSCRIPTIONS,MAGS,MAP	5050								
	BOOKS	5070	200			200	67%	0%	(200)	-100%
	COMPUTER SUPPLIES	5080	300			300	67%	0%	(300)	-100%
----------			---------	---------	---------	---------	-----	-----	--------	-----
90	**OFFICE SUPPLIES**		**6,800**		**1,180**	**5,620**	**67%**	**17%**	**(5,030)**	**-74%**
	OPERATING SUPPLIES									
	CLEANING/JANITORIAL SP	5100	2,700		1,161	1,539	67%	43%	(958)	-35%
	FOOD	5115								
	MEDICAL SUPPLIES	5120								
4,037	CHEMICALS	5130	55,000		30,629	24,371	67%	56%	(9,056)	-16%
425	GAS AND OIL	5250	17,000		4,033	12,967	67%	24%	(10,950)	-64%
	LUBRICANTS	5255	500			500	67%	0%	(500)	-100%

			CITY OF HATTIESBURG							
	009673 - W&S O&M-WATER PLANT DIVISION		EXPENDITURE REPORT							
			8 Months Ending 05/31/13							
THIS MONTH			ANNUAL	OPEN PO	YTD	REMAINING	PERCENT		....PROJECTED....	
ACTUAL		OBJ/SUB	BUDGET	& CONTRACTS	ACTUAL	BALANCE	PLAN	ACTUAL	OVER/UNDER	%
793	DIESEL FUEL	5257	3,000		9,464	(6,464)	67%	315%	11,196	373%
26	OTHER FUEL	5260	600		326	274	67%	54%	(110)	-18%
	WEARING APPAREL	5355			60-	60			90	
	CONCRETE, CEMENT, ETC.	5405								
	SAND,CLAY,GRVL,FILL DI	5415								
	DRAINAGE PIPE & CULVER	5420								
	HORT./LANDSCAPING SPLY	5440	450			450	67%	0%	(450)	-100%
	HAND TOOLS	5450	500		83	417	67%	17%	(375)	-75%
	MINOR EQUIPMENT	5460	1,000			1,000	67%	0%	(1,000)	-100%
	METER PARTS	5485			13-	13			19	
	VALVE PARTS	5490								
1,830	PUMPING EQUIPMENT PART	5495	5,000		3,863	1,137	67%	77%	794	16%
674	OTHER OPERATING MATL/S	5590	4,000	198	2,875	928	67%	72%	312	8%
---			---	---	---	---	---	---	---	---
7,785	**OPERATING SUPPLIES**		**89,750**	**198**	**52,361**	**37,191**	**67%**	**58%**	**(11,208)**	**-12%**
	REPAIR & MAINTENANCE SP									
	BUILDING MATERIALS & S	5600	1,700	46	1,551	103	67%	91%	626	37%
1,073	ELECTRICAL SUPPLIES	5605	11,000	393	4,626	5,981	67%	42%	(4,060)	-37%
735	PLUMBING SUPPLIES	5610	2,000		1,162	838	67%	58%	(256)	-13%
	STRUCTURAL STEEL & IRO	5620								
390	PAINT AND PAINTING SPL	5650	1,497		1,198	299	67%	80%	300	20%
491	MTR VEHICLE REP. PTS/S	5700	3,200		1,056	2,144	67%	33%	(1,616)	-51%
	GENERATOR REP. PTS/SPL	5705	50,000	234	790	48,977	67%	2%	(48,814)	-98%
	COMMUNICATION REPAIR P	5750	2,000		1,170	830	67%	59%	(244)	-12%
	AGRICLTRL REPAIR PTS/S	5755								
	MINOR COMPUTER EQUIP.	5800								
198	OTHER REPAIR/MAINT. SP	5990	1,200		678	522	67%	57%	(182)	-15%
---			---	---	---	---	---	---	---	---
2,887	**REPAIR & MAINTENANCE**		**72,597**	**673**	**12,231**	**59,693**	**67%**	**17%**	**(54,250)**	**-75%**
---			---	---	---	---	---	---	---	---
10,762	**SUPPLIES AND EXPENSES**		**169,147**	**871**	**65,772**	**102,505**	**67%**	**39%**	**(70,489)**	**-42%**
	PROFESSIONAL SERVICES									
	ENGINEERING	6015								
	CONSULTANT SERV/SURVEY	6020								
2,057	OTHER PROFESSIONAL SER	6049	100,000		17,399	82,601	67%	17%	(73,901)	-74%
---			---	---	---	---	---	---	---	---

			CITY OF HATTIESBURG							
	009673 - W&S O&M-WATER PLANT DIVISION		EXPENDITURE REPORT							
			8 Months Ending 05/31/13							
THIS MONTH			ANNUAL	OPEN PO	YTD	REMAINING	PERCENT		....PROJECTED....	
ACTUAL		OBJ/SUB	BUDGET	& CONTRACTS	ACTUAL	BALANCE	PLAN	ACTUAL	OVER/UNDER	%
2,057	**PROFESSIONAL SERVICE**		**100,000**		**17,399**	**82,601**	**67%**	**17%**	**(73,901)**	**-74%**
	COMMUNICATIONS									
195	TELEPHONE AND TELEGRAP	6060	2,400		1,371	1,029	67%	57%	(343)	-14%
	POSTAGE	6070	55		50	5	67%	91%	20	36%
---			---	---	---	---	---	---	---	---
195	**COMMUNICATIONS**		**2,455**		**1,421**	**1,034**	**67%**	**58%**	**(323)**	**-13%**
	TRANSPORTATION									
	TRAVEL EXPENSE	6110	2,955		414	2,541	67%	14%	(2,333)	-79%
	FREIGHT	6120								
	MESSENGER/EXPRESS SERV	6130								
---			---	---	---	---	---	---	---	---
	TRANSPORTATION		**2,955**		**414**	**2,541**	**67%**	**14%**	**(2,333)**	**-79%**
	ADVERTISING									
	ADVERTISING	6150								
---			---	---	---	---	---	---	---	---
	ADVERTISING									
	PRINTING AND BINDING									
	PRINTING	6200								
---			---	---	---	---	---	---	---	---
	PRINTING AND BINDING									
	INSURANCE									
	BOILER MACHINERY	6260								
	SURETY AND FORGERY BON	6270								
---			---	---	---	---	---	---	---	---
	INSURANCE									
	UTILITIES									
425	GAS	6300	10,000		7,916	2,084	67%	79%	1,874	19%
53,968	ELECTRICITY	6305	625,000		407,319	217,681	67%	65%	(14,021)	-2%
---			---	---	---	---	---	---	---	---
54,393	**UTILITIES**		**635,000**		**415,235**	**219,765**	**67%**	**65%**	**(12,147)**	**-2%**
	REPR/MAINT-OUTSIDE LABO									
	BUILDING R&M	6350	1,000			1,000	67%	0%	(1,000)	-100%
6,822	ELECTRICAL R&M	6355	55,000	29,800	11,756	13,444	67%	21%	(37,366)	-68%
	PLUMBING EQUIPMENT R&M	6357								
	OFFICE EQUIPMENT R&M	6365	1,000		677	323	67%	68%	15	2%
8,415	FIXED EQUIPMENT R&M	6380	74,354		55,629	18,725	67%	75%	9,089	12%
	MINOR EQUIPMENT R&M	6382	1,000		326	674	67%	33%	(510)	-51%

			CITY OF HATTIESBURG							
	009673 - W&S O&M-WATER PLANT DIVISION		EXPENDITURE REPORT							
			8 Months Ending 05/31/13							
THIS MONTH			ANNUAL	OPEN PO	YTD	REMAINING	PERCENT		....PROJECTED....	
ACTUAL		OBJ/SUB	BUDGET	& CONTRACTS	ACTUAL	BALANCE	PLAN	ACTUAL	OVER/UNDER	%
113	GENERATOR R&M	6383	98,500	12,563	8,585	77,353	67%	9%	(85,622)	-87%
1,238	MOTOR VEHICLE EQ. R&M	6384	3,500		2,486	1,014	67%	71%	229	7%
	CONSTRUCTION EQUIP R&M	6386								
	AGRICULTURAL EQ. R&M	6387								
	COMMUNICATION EQ. R&M	6390	1,000		852	148	67%	85%	278	28%
165	DISINFECT./EXTERMINATI	6394	1,500		792	708	67%	53%	(312)	-21%
	OTHER REPAIRS AND MAIN	6399	600		25	575	67%	4%	(562)	-94%
---			---	---	---	---	---	---	---	---
16,753	**REPR/MAINT-OUTSIDE L**		**237,454**	**42,363**	**81,127**	**113,965**	**67%**	**34%**	**(115,763)**	**-49%**
	RENTALS									
	OFFICE EQUIPMENT RENT	6410								
	MACHINERY RENT	6420								
	CYLINDER RENT	6425								
260	UNIFORM RENT	6430	3,500		1,808	1,692	67%	52%	(788)	-23%
98	MOP-MAT-RAG RENT	6435	1,000		616	384	67%	62%	(76)	-8%
	OTHER RENT	6449								
---			---	---	---	---	---	---	---	---
358	**RENTALS**		**4,500**		**2,424**	**2,076**	**67%**	**54%**	**(864)**	**-19%**
	OTHER SERVICES & CHARGE									
	BANK SERV/TRF FEE	6832								
	DUES AND MEMBERSHIPS	6840	1,000		100	900	67%	10%	(850)	-85%
125	REGISTRATION FEE/TUITI	6845	1,000		226	774	67%	23%	(660)	-66%
	CUSTODIAL SERVICE	6870								
	PROPERTY TAXES	6995								
	SERVICES NOT SPECIFIED	6999	2,000		220	1,780	67%	11%	(1,670)	-84%
---			---	---	---	---	---	---	---	---
125	**OTHER SERVICES & CHA**		**4,000**		**546**	**3,454**	**67%**	**14%**	**(3,180)**	**-80%**
---			---	---	---	---	---	---	---	---
73,880	**OTHER SERVICES & CHAR**		**986,364**	**42,363**	**518,566**	**425,436**	**67%**	**53%**	**(208,514)**	**-21%**
	_____									
	BUILDING/BLD IMPROVEMEN									
	BUILDING IMPROVEMENTS	7150								
	W&S WAREHOUSE IMPROVE	7150 11								
	WATER PLANT RENOVATIO	7150 17								
	ELEVATOR	7150 24								
---			---	---	---	---	---	---	---	---
	BUILDING IMPROVEMEN									

			CITY OF HATTIESBURG							
	009673 - W&S O&M-WATER PLANT DIVISION		EXPENDITURE REPORT							
			8 Months Ending 05/31/13							
THIS MONTH			ANNUAL	OPEN PO	YTD	REMAINING	PERCENT		....PROJECTED....	
ACTUAL		OBJ/SUB	BUDGET	& CONTRACTS	ACTUAL	BALANCE	PLAN	ACTUAL	OVER/UNDER	%
---			---	---	---	---	---	---	---	---
	BUILDING/BLD IMPROVE									
	IMPROVEMENT OTHER THAN									
	FENCES/RAILINGS	7212	1,000			1,000	67%	0%	(1,000)	-100%
	LANDSCAPING	7250								
	OTHER IMPROVEMENTS	7295								
---			---	---	---	---	---	---	---	---
	IMPROVEMENT OTHER TH		**1,000**			**1,000**	**67%**	**0%**	**(1,000)**	**-100%**
	MACHINERY AND EQUIPMENT									
	OFFICE FURN/EQUIP.	7325								
	DATA PROCESSING EQUIP.	7327	4,000			4,000	67%	0%	(4,000)	-100%
	WATER UTILITY SOFTWARE	7329	7,500			7,500	67%	0%	(7,500)	-100%
	AGRICULTURAL EQUIPMENT	7335								
	PLANT EQUIPMENT	7340	4,000		3,995	5	67%	100%	1,992	50%
	COMMUNICATION EQUIPMEN	7355	3,000			3,000	67%	0%	(3,000)	-100%
	HYDRANTS & METERS	7365								
	OTHER EQUIPMENT	7399								
---			---	---	---	---	---	---	---	---
	MACHINERY AND EQUIPM		**18,500**		**3,995**	**14,505**	**67%**	**22%**	**(12,507)**	**-68%**
	VEHICLES									
	AUTOMOBILES	7400								
	PICK UP TRUCKS	7420								
---			---	---	---	---	---	---	---	---
	VEHICLES									
---			---	---	---	---	---	---	---	---
	CAPITAL OUTLAY		**19,500**		**3,995**	**15,505**	**67%**	**20%**	**(13,507)**	**-69%**
---			---	---	---	---	---	---	---	---
145,339	**EXPENDITURES**		**1,732,787**	**43,234**	**955,173**	**734,381**	**67%**	**55%**	**(300,027)**	**-17%**

			CITY OF HATTIESBURG							
	009676 - W&S O&M-SEWER DIVISION		EXPENDITURE REPORT							
			8 Months Ending 05/31/13							
THIS MONTH			ANNUAL	OPEN PO	YTD	REMAINING	PERCENT		....PROJECTED....	
ACTUAL		OBJ/SUB	BUDGET	& CONTRACTS	ACTUAL	BALANCE	PLAN	ACTUAL	OVER/UNDER	%
	_____									
	_____									
	SALARIES									
35,930	REGULAR WAGES	4000	421,906		233,071	188,835	67%	55%	(72,299)	-17%
	DISASTER RECOVERY WAGE	4010			165	(165)			247	
5,331	OVERTIME	4300	35,000		34,120	880	67%	97%	16,180	46%
	DISASTER RECOVERY OVER	4310								
----------			---------	---------	---------	---------	-----	-----	--------	-----
41,261	**SALARIES**		**456,906**		**267,356**	**189,550**	**67%**	**59%**	**(55,872)**	**-12%**
	EMPLOYEE BENEFITS									
5,884	STATE RETIREMENT	4600	65,160		38,125	27,035	67%	59%	(7,972)	-12%
3,150	F.I.C.A. TAXES	4700	34,960		20,337	14,623	67%	58%	(4,454)	-13%
10,712	HOSPITALIZATION INS.	4800	104,400		51,064	53,336	67%	49%	(27,804)	-27%
	UNEMPLOYMENT BENEFITS	4900	2,700		917	1,783	67%	34%	(1,324)	-49%
	WORKMAN'S COMPENSATION	4910	22,580			22,580	67%	0%	(22,580)	-100%
----------			---------	---------	---------	---------	-----	-----	--------	-----
19,746	**EMPLOYEE BENEFITS**		**229,800**		**110,444**	**119,356**	**67%**	**48%**	**(64,134)**	**-28%**
----------			---------	---------	---------	---------	-----	-----	--------	-----
61,007	**PERSONAL SERVICES**		**686,706**		**377,800**	**308,906**	**67%**	**55%**	**(120,006)**	**-17%**
	_____									
	OPERATING SUPPLIES									
	CLEANING/JANITORIAL SP	5100								
	HOUSEHOLD SUPPLIES	5110								
	MEDICAL SUPPLIES	5120								
10,510	CHEMICALS	5130	120,000		111,337	8,663	67%	93%	47,005	39%
1,322	GAS AND OIL	5250	30,000		10,274	19,726	67%	34%	(14,588)	-49%
	LUBRICANTS	5255								
1,598	DIESEL FUEL	5257	25,500		14,897	10,603	67%	58%	(3,154)	-12%
	OTHER FUEL	5260								
440	WEARING APPAREL	5355	4,000	755	2,465	781	67%	62%	(302)	-8%
	ASPHALT & ASPHALT PROD	5400								
2,695	CONCRETE, CEMENT, ETC.	5405	10,000	56	5,379	4,565	67%	54%	(1,931)	-19%
	BRICK,STONE,MORTAR,ETC	5410	600			600	67%	0%	(600)	-100%
2,300	SAND,CLAY,GRVL,FILL DI	5415	8,000		6,149	1,851	67%	77%	1,223	15%
	DRAINAGE PIPE & CULVER	5420								
	HORT./LANDSCAPING SPLY	5440	300		80	220	67%	27%	(180)	-60%
551	HAND TOOLS	5450	900		853	47	67%	95%	379	42%

			CITY OF HATTIESBURG							
	009676 - W&S O&M-SEWER DIVISION		EXPENDITURE REPORT							
			8 Months Ending 05/31/13							
THIS MONTH			ANNUAL	OPEN PO	YTD	REMAINING	PERCENT		....PROJECTED....	
ACTUAL		OBJ/SUB	BUDGET	& CONTRACTS	ACTUAL	BALANCE	PLAN	ACTUAL	OVER/UNDER	%
200	MINOR EQUIPMENT	5460	1,300		1,187	113	67%	91%	480	37%
	PUMPING EQUIPMENT PART	5495	500			500	67%	0%	(500)	-100%
450	OTHER OPERATING MATL/S	5590	1,000	59	782	160	67%	78%	173	17%
---			---	---	---	---	---	---	---	---
20,065	**OPERATING SUPPLIES**		**202,100**	**870**	**153,401**	**47,829**	**67%**	**76%**	**28,001**	**14%**
	REPAIR & MAINTENANCE SP									
	BUILDING MATERIALS & S	5600	1,900		643	1,257	67%	34%	(935)	-49%
118	ELECTRICAL SUPPLIES	5605	3,250	98	1,649	1,503	67%	51%	(776)	-24%
1,802	PLUMBING SUPPLIES	5610	30,500		28,947	1,553	67%	95%	12,920	42%
	STRUCTURAL STEEL & IRO	5620								
	PAINT AND PAINTING SPL	5650			996	(996)			1,494	
965	MTR VEHICLE REP. PTS/S	5700	20,000	529	16,511	2,961	67%	83%	4,766	24%
	COMMUNICATION REPAIR P	5750								
	AGRICLTRL REPAIR PTS/S	5755								
	EXPENDABLE WELDING SPL	5770								
	OTHER REPAIR/MAINT. SP	5990	1,750		1,727	23	67%	99%	840	48%
---			---	---	---	---	---	---	---	---
2,885	**REPAIR & MAINTENANCE**		**57,400**	**627**	**50,472**	**6,301**	**67%**	**88%**	**18,308**	**32%**
---			---	---	---	---	---	---	---	---
22,950	**SUPPLIES AND EXPENSES**		**259,500**	**1,497**	**203,873**	**54,130**	**67%**	**79%**	**46,309**	**18%**
	PROFESSIONAL SERVICES									
	LEGAL	6025								
	OTHER PROFESSIONAL SER	6049	2,000			2,000	67%	0%	(2,000)	-100%
---			---	---	---	---	---	---	---	---
	PROFESSIONAL SERVICE		**2,000**			**2,000**	**67%**	**0%**	**(2,000)**	**-100%**
	COMMUNICATIONS									
	TELEPHONE AND TELEGRAP	6060								
	POSTAGE	6070								
---			---	---	---	---	---	---	---	---
	COMMUNICATIONS									
	TRANSPORTATION									
	TRAVEL EXPENSE	6110								
	FREIGHT	6120								
---			---	---	---	---	---	---	---	---
	TRANSPORTATION									
	ADVERTISING									

			CITY OF HATTIESBURG							
	009676 - W&S O&M-SEWER DIVISION		EXPENDITURE REPORT							
			8 Months Ending 05/31/13							
THIS MONTH			ANNUAL	OPEN PO	YTD	REMAINING	PERCENT		....PROJECTED....	
ACTUAL		OBJ/SUB	BUDGET	& CONTRACTS	ACTUAL	BALANCE	PLAN	ACTUAL	OVER/UNDER	%
	ADVERTISING	6150								
---			---	---	---	---	---	---	---	---
	ADVERTISING									
	INSURANCE									
	PUBLIC LIAB/PROPERTY D	6255								
	BOILER MACHINERY	6260								
	AUTOMOBILE INSURANCE	6265								
---			---	---	---	---	---	---	---	---
	INSURANCE									
	UTILITIES									
13	GAS	6300	300		107	193	67%	36%	(139)	-46%
9,525	ELECTRICITY	6305	80,000		58,255	21,745	67%	73%	7,382	9%
---			---	---	---	---	---	---	---	---
9,538	**UTILITIES**		**80,300**		**58,362**	**21,938**	**67%**	**73%**	**7,243**	**9%**
	REPR/MAINT-OUTSIDE LABO									
2,997	ELECTRICAL R&M	6355	7,500		4,260	3,240	67%	57%	(1,110)	-15%
	PLUMBING EQUIPMENT R&M	6357								
49,461	STREETS & STRUCTURES R	6360	806,150		788,382	17,769	67%	98%	376,423	47%
	FIXED EQUIPMENT R&M	6380								
	MINOR EQUIPMENT R&M	6382	2,000			2,000	67%	0%	(2,000)	-100%
1,526	MOTOR VEHICLE EQ. R&M	6384	30,000		10,518	19,482	67%	35%	(14,222)	-47%
	CONSTRUCTION EQUIP R&M	6386	3,719	208	1,752	1,759	67%	47%	(1,091)	-29%
	AGRICULTURAL EQ. R&M	6387								
	COMMUNICATION EQ. R&M	6390	500			500	67%	0%	(500)	-100%
500	TOW IN CHARGES	6398	1,000		920	80	67%	92%	380	38%
	OTHER REPAIRS AND MAIN	6399								
---			---	---	---	---	---	---	---	---
54,484	**REPR/MAINT-OUTSIDE L**		**850,869**	**208**	**805,832**	**44,830**	**67%**	**95%**	**357,879**	**42%**
	RENTALS									
	AUTOMOTIVE EQ. RENT	6415								
	MACHINERY RENT	6420	1,500	470	128	903	67%	9%	(1,308)	-87%
	CYLINDER RENT	6425	300			300	67%	0%	(300)	-100%
288	UNIFORM RENT	6430	3,000		1,957	1,043	67%	65%	(64)	-2%
	OTHER RENT	6449								
---			---	---	---	---	---	---	---	---
288	**RENTALS**		**4,800**	**470**	**2,084**	**2,246**	**67%**	**43%**	**(1,674)**	**-35%**
	OTHER SERVICES & CHARGE									

			CITY OF HATTIESBURG							
	009676 - W&S O&M-SEWER DIVISION		EXPENDITURE REPORT							
			8 Months Ending 05/31/13							
THIS MONTH			ANNUAL	OPEN PO	YTD	REMAINING	PERCENT		....PROJECTED....	
ACTUAL		OBJ/SUB	BUDGET	& CONTRACTS	ACTUAL	BALANCE	PLAN	ACTUAL	OVER/UNDER	%
	REGISTRATION FEE/TUITI	6845								
	SERVICES NOT SPECIFIED	6999								
----------			---------	---------	---------	---------	-----	-----	--------	-----
	OTHER SERVICES & CHA									
----------			---------	---------	---------	---------	-----	-----	--------	-----
64,310	**OTHER SERVICES & CHAR**		**937,969**	**678**	**866,279**	**71,013**	**67%**	**92%**	**361,449**	**39%**
	_____									
	BUILDING/BLD IMPROVEMEN									
	BUILDINGS	7100								
	SEWER MAINT. BLDG.	7100 09								
----------			---------	---------	---------	---------	-----	-----	--------	-----
	BUILDINGS									
----------			---------	---------	---------	---------	-----	-----	--------	-----
	BUILDING/BLD IMPROVE									
	IMPROVEMENT OTHER THAN									
	BRIDGES	7210								
	FENCES/RAILINGS	7212	3,000			3,000	67%	0%	(3,000)	-100%
	DRAINS	7215								
	SEWERS	7220								
	STREETS & ROADWAYS	7230								
----------			---------	---------	---------	---------	-----	-----	--------	-----
	IMPROVEMENT OTHER TH		**3,000**			**3,000**	**67%**	**0%**	**(3,000)**	**-100%**
	MACHINERY AND EQUIPMENT									
	ENGINEERING	7305								
	DATA PROCESSING EQUIP.	7327								
	AGRICULTURAL EQUIPMENT	7335								
	PLANT EQUIPMENT	7340								
	CONSTRUCTION EQUIPMENT	7345								
	COMMUNICATION EQUIPMEN	7355								
	PIPE	7370								
	OTHER EQUIPMENT	7399								
----------			---------	---------	---------	---------	-----	-----	--------	-----
	MACHINERY AND EQUIPM									
	VEHICLES									
	AUTOMOBILES	7400								
	PICK UP TRUCKS	7420								
	DUMP TRUCKS	7440								

			CITY OF HATTIESBURG							
	009676 - W&S O&M-SEWER DIVISION		EXPENDITURE REPORT							
			8 Months Ending 05/31/13							
THIS MONTH			ANNUAL	OPEN PO	YTD	REMAINING	PERCENT		....PROJECTED....	
ACTUAL		OBJ/SUB	BUDGET	& CONTRACTS	ACTUAL	BALANCE	PLAN	ACTUAL	OVER/UNDER	%
	SPECIAL TRUCKS	7450	304,840		304,840		67%	100%	152,420	50%
---			---	---	---	---	---	---	---	---
	VEHICLES		**304,840**		**304,840**		**67%**	**100%**	**152,420**	**50%**
---			---	---	---	---	---	---	---	---
	CAPITAL OUTLAY		**307,840**		**304,840**	**3,000**	**67%**	**99%**	**149,420**	**49%**
---			---	---	---	---	---	---	---	---
148,267	**EXPENDITURES**		**2,192,015**	**2,175**	**1,752,792**	**437,050**	**67%**	**80%**	**437,173**	**20%**

			CITY OF HATTIESBURG							
	009677 - W&S O&M-SEWER LAGOON DIV.		EXPENDITURE REPORT							
			8 Months Ending 05/31/13							
THIS MONTH			ANNUAL	OPEN PO	YTD	REMAINING	PERCENT		....PROJECTED....	
ACTUAL		OBJ/SUB	BUDGET	& CONTRACTS	ACTUAL	BALANCE	PLAN	ACTUAL	OVER/UNDER	%
	_____									
	_____									
	SALARIES									
12,724	REGULAR WAGES	4000	155,906		77,955	77,951	67%	50%	(38,973)	-25%
	DISASTER RECOVERY WAGE	4010			52	(52)			78	
2,880	OVERTIME	4300	20,000		20,783	(783)	67%	104%	11,174	56%
	DISASTER RECOVERY OVER	4310								
---			---	---	---	---	---	---	---	---
15,604	**SALARIES**		**175,906**		**98,791**	**77,115**	**67%**	**56%**	**(27,719)**	**-16%**
	EMPLOYEE BENEFITS									
2,225	STATE RETIREMENT	4600	25,090		14,088	11,002	67%	56%	(3,958)	-16%
1,157	F.I.C.A. TAXES	4700	13,460		7,263	6,197	67%	54%	(2,565)	-19%
3,400	HOSPITALIZATION INS.	4800	36,540		16,592	19,948	67%	45%	(11,652)	-32%
	UNEMPLOYMENT BENEFITS	4900	1,000			1,000	67%	0%	(1,000)	-100%
	WORKMAN'S COMPENSATION	4910	6,489			6,489	67%	0%	(6,489)	-100%
---			---	---	---	---	---	---	---	---
6,782	**EMPLOYEE BENEFITS**		**82,579**		**37,943**	**44,636**	**67%**	**46%**	**(25,664)**	**-31%**
---			---	---	---	---	---	---	---	---
22,386	**PERSONAL SERVICES**		**258,485**		**136,734**	**121,751**	**67%**	**53%**	**(53,383)**	**-21%**
	_____									
	OFFICE SUPPLIES									
	OPERATING SUPPLIES									
	CLEANING/JANITORIAL SP	5100								
	MEDICAL SUPPLIES	5120	900			900	67%	0%	(900)	-100%
25,426	CHEMICALS	5130	153,000		107,302	45,698	67%	70%	7,953	5%
639	GAS AND OIL	5250	38,000		6,785	31,215	67%	18%	(27,822)	-73%
	LUBRICANTS	5255	7,800		84	7,716	67%	1%	(7,674)	-98%
472	DIESEL FUEL	5257	1,000		3,617	(2,617)	67%	362%	4,425	443%
	OTHER FUEL	5260	1,000			1,000	67%	0%	(1,000)	-100%
75	WEARING APPAREL	5355	200		139	61	67%	70%	8	4%
	CONCRETE, CEMENT, ETC.	5405								
	SAND,CLAY,GRVL,FILL DI	5415								
184	HAND TOOLS	5450	500		279	221	67%	56%	(81)	-16%
	MINOR EQUIPMENT	5460	1,000			1,000	67%	0%	(1,000)	-100%
	METER PARTS	5485	2,900			2,900	67%	0%	(2,900)	-100%
	VALVE PARTS	5490								
11,714	PUMPING EQUIPMENT PART	5495	142,000	509	67,965	73,525	67%	48%	(40,052)	-28%

			CITY OF HATTIESBURG							
	009677 - W&S O&M-SEWER LAGOON DIV.		EXPENDITURE REPORT							
			8 Months Ending 05/31/13							
THIS MONTH			ANNUAL	OPEN PO	YTD	REMAINING	PERCENT		....PROJECTED....	
ACTUAL		OBJ/SUB	BUDGET	& CONTRACTS	ACTUAL	BALANCE	PLAN	ACTUAL	OVER/UNDER	%
275	OTHER OPERATING MATL/S	5590	5,000		1,759	3,241	67%	35%	(2,361)	-47%
---			---	---	---	---	---	---	---	---
38,785	**OPERATING SUPPLIES**		**353,300**	**509**	**187,930**	**164,861**	**67%**	**53%**	**(71,404)**	**-20%**
	REPAIR & MAINTENANCE SP									
	BUILDING MATERIALS & S	5600								
3,963	ELECTRICAL SUPPLIES	5605	20,000	3,500	9,643	6,857	67%	48%	(5,535)	-28%
	PLUMBING SUPPLIES	5610	500		70	430	67%	14%	(394)	-79%
	STRUCTURAL STEEL & IRO	5620								
	PAINT AND PAINTING SPL	5650								
	MTR VEHICLE REP. PTS/S	5700	3,000		1,214	1,786	67%	40%	(1,178)	-39%
	COMMUNICATION REPAIR P	5750								
	EXPENDABLE WELDING SPL	5770								
	OTHER REPAIR/MAINT. SP	5990								
---			---	---	---	---	---	---	---	---
3,963	**REPAIR & MAINTENANCE**		**23,500**	**3,500**	**10,927**	**9,073**	**67%**	**46%**	**(7,109)**	**-30%**
---			---	---	---	---	---	---	---	---
42,748	**SUPPLIES AND EXPENSES**		**376,800**	**4,009**	**198,857**	**173,934**	**67%**	**53%**	**(78,514)**	**-21%**
	PROFESSIONAL SERVICES									
	CONSULTANT SERV/SURVEY	6020	52,500			52,500	67%	0%	(52,500)	-100%
23,064	LEGAL	6025	350,000		155,481	194,519	67%	44%	(116,778)	-33%
	MEDICAL	6027								
15,300	OTHER PROFESSIONAL SER	6049	153,200	3,200	119,740	30,260	67%	78%	26,410	17%
---			---	---	---	---	---	---	---	---
38,363	**PROFESSIONAL SERVICE**		**555,700**	**3,200**	**275,221**	**277,279**	**67%**	**50%**	**(142,868)**	**-26%**
	TRANSPORTATION									
	TRAVEL EXPENSE	6110	2,500			2,500	67%	0%	(2,500)	-100%
	FREIGHT	6120								
	MESSENGER/EXPRESS SERV	6130								
---			---	---	---	---	---	---	---	---
	TRANSPORTATION		**2,500**			**2,500**	**67%**	**0%**	**(2,500)**	**-100%**
	ADVERTISING									
	ADVERTISING	6150								
---			---	---	---	---	---	---	---	---
	ADVERTISING									
	INSURANCE									
	PUBLIC LIAB/PROPERTY D	6255								

			CITY OF HATTIESBURG							
	009677 - W&S O&M-SEWER LAGOON DIV.		EXPENDITURE REPORT							
			8 Months Ending 05/31/13							
THIS MONTH			ANNUAL	OPEN PO	YTD	REMAINING	PERCENT		....PROJECTED....	
ACTUAL		OBJ/SUB	BUDGET	& CONTRACTS	ACTUAL	BALANCE	PLAN	ACTUAL	OVER/UNDER	%
	AUTOMOBILE INSURANCE	6265								
---			---	---	---	---	---	---	---	---
	INSURANCE									
	UTILITIES									
59,463	ELECTRICITY	6305	1,008,500		478,006	530,494	67%	47%	(291,490)	-29%
	INTERFUND ENERGY REIMB	6307								
---			---	---	---	---	---	---	---	---
59,463	**UTILITIES**		**1,008,500**		**478,006**	**530,494**	**67%**	**47%**	**(291,490)**	**-29%**
	REPR/MAINT-OUTSIDE LABO									
	BUILDING R&M	6350								
2,800	ELECTRICAL R&M	6355	18,000		16,962	1,038	67%	94%	7,443	41%
	FIXED EQUIPMENT R&M	6380	104,200	7,211	57,791	39,198	67%	55%	(17,513)	-17%
	MINOR EQUIPMENT R&M	6382								
	MOTOR VEHICLE EQ. R&M	6384	5,500	1,874	3,280	346	67%	60%	(580)	-11%
	CONSTRUCTION EQUIP R&M	6386	300		188	112	67%	63%	(18)	-6%
	COMMUNICATION EQ. R&M	6390	1,000	833		167	67%	0%	(1,000)	-100%
135	DISINFECT./EXTERMINATI	6394	500		405	95	67%	81%	107	21%
75	TOW IN CHARGES	6398	500		225	275	67%	45%	(162)	-32%
	OTHER REPAIRS AND MAIN	6399								
---			---	---	---	---	---	---	---	---
3,010	**REPR/MAINT-OUTSIDE L**		**130,000**	**9,918**	**78,850**	**41,232**	**67%**	**61%**	**(11,724)**	**-9%**
	RENTALS									
	MACHINERY RENT	6420								
101	UNIFORM RENT	6430	1,100		711	389	67%	65%	(33)	-3%
---			---	---	---	---	---	---	---	---
101	**RENTALS**		**1,100**		**711**	**389**	**67%**	**65%**	**(33)**	**-3%**
	OTHER SERVICES & CHARGE									
	DUES AND MEMBERSHIPS	6840								
	REGISTRATION FEE/TUITI	6845								
6,750	SERVICES NOT SPECIFIED	6999	32,000		9,399	22,601	67%	29%	(17,901)	-56%
---			---	---	---	---	---	---	---	---
6,750	**OTHER SERVICES & CHA**		**32,000**		**9,399**	**22,601**	**67%**	**29%**	**(17,901)**	**-56%**
---			---	---	---	---	---	---	---	---
107,687	**OTHER SERVICES & CHAR**		**1,729,800**	**13,118**	**842,187**	**874,495**	**67%**	**49%**	**(466,519)**	**-27%**
	IMPROVEMENT OTHER THAN									
	SEWERS	7220								

			CITY OF HATTIESBURG							
	009677 - W&S O&M-SEWER LAGOON DIV.		EXPENDITURE REPORT							
			8 Months Ending 05/31/13							
THIS MONTH			ANNUAL	OPEN PO	YTD	REMAINING	PERCENT		....PROJECTED....	
ACTUAL		OBJ/SUB	BUDGET	& CONTRACTS	ACTUAL	BALANCE	PLAN	ACTUAL	OVER/UNDER	%
	CDBG-WIS PAK	7220 46								
---			---	---	---	---	---	---	---	---
	SEWERS									
	STREETS & ROADWAYS	7230								
	OTHER IMPROVEMENTS	7295								
	BONHOMIE RD PUMPING S	7295 47								
---			---	---	---	---	---	---	---	---
	OTHER IMPROVEMENTS									
---			---	---	---	---	---	---	---	---
	IMPROVEMENT OTHER TH									
	MACHINERY AND EQUIPMENT									
	OFFICE FURN/EQUIP.	7325								
2,767	DATA PROCESSING EQUIP.	7327	60,000	13,787	3,646	42,567	67%	6%	(54,530)	-91%
	AGRICULTURAL EQUIPMENT	7335								
	COMMUNICATION EQUIPMEN	7355								
	OTHER EQUIPMENT	7399								
---			---	---	---	---	---	---	---	---
2,767	**MACHINERY AND EQUIPM**		**60,000**	**13,787**	**3,646**	**42,567**	**67%**	**6%**	**(54,530)**	**-91%**
	VEHICLES									
	AUTOMOBILES	7400								
	SPECIAL TRUCKS	7450								
---			---	---	---	---	---	---	---	---
	VEHICLES									
---			---	---	---	---	---	---	---	---
2,767	**CAPITAL OUTLAY**		**60,000**	**13,787**	**3,646**	**42,567**	**67%**	**6%**	**(54,530)**	**-91%**
	_____									
	CAPITAL LEASE PAYMENTS									
	ENERGY IMPR LEASE	8517								
---			---	---	---	---	---	---	---	---
	CAPITAL LEASE PAYMEN									
	INTEREST ON CAPITAL LEA									
	ENERGY IMPR LEASE	8617								
---			---	---	---	---	---	---	---	---
	INTEREST ON CAPITAL									
---			---	---	---	---	---	---	---	---
	DEBT SERVICE									
---			---	---	---	---	---	---	---	---

			CITY OF HATTIESBURG							
	009677 - W&S O&M-SEWER LAGOON DIV.		EXPENDITURE REPORT							
			8 Months Ending 05/31/13							
THIS MONTH			ANNUAL	OPEN PO	YTD	REMAINING	PERCENT		....PROJECTED....	
ACTUAL		OBJ/SUB	BUDGET	& CONTRACTS	ACTUAL	BALANCE	PLAN	ACTUAL	OVER/UNDER	%
175,587	**EXPENDITURES**		**2,425,085**	**30,914**	**1,181,423**	**1,212,748**	**67%**	**49%**	**(652,950)**	**-27%**

			CITY OF HATTIESBURG							
	010451 - W&S B&I-REVENUE OBLIGATIONS		EXPENDITURE REPORT							
			8 Months Ending 05/31/13							
THIS MONTH			ANNUAL	OPEN PO	YTD	REMAINING	PERCENT		....PROJECTED....	
ACTUAL		OBJ/SUB	BUDGET	& CONTRACTS	ACTUAL	BALANCE	PLAN	ACTUAL	OVER/UNDER	%
	_____									
	_____									
	BONDS REDEEMED									
	GENERAL ISSUES	8000	535,000		410,000	125,000	67%	77%	80,000	15%
	REVENUE ISSUES	8010	1,535,000		475,000	1,060,000	67%	31%	(822,500)	-54%
	5 YEAR NOTE PRINCIPAL	8021								
---			---	---	---	---	---	---	---	---
	BONDS REDEEMED		**2,070,000**		**885,000**	**1,185,000**	**67%**	**43%**	**(742,500)**	**-36%**
	INTEREST ON BONDS									
	GENERAL ISSUES	8100	312,900		159,774	153,126	67%	51%	(73,238)	-23%
	REVENUE ISSUES	8110	927,425		645,706	281,719	67%	70%	41,134	4%
	5 YEAR NOTE INTEREST	8121	20,700			20,700	67%	0%	(20,700)	-100%
---			---	---	---	---	---	---	---	---
	INTEREST ON BONDS		**1,261,025**		**805,481**	**455,545**	**67%**	**64%**	**(52,803)**	**-4%**
	PAYING AGENT FEES									
	GENERAL ISSUES	8400	2,500		530	1,970	67%	21%	(1,704)	-68%
	REVENUE ISSUES	8410								
---			---	---	---	---	---	---	---	---
	PAYING AGENT FEES		**2,500**		**530**	**1,970**	**67%**	**21%**	**(1,704)**	**-68%**
---			---	---	---	---	---	---	---	---
	DEBT SERVICE		**3,333,525**		**1,691,011**	**1,642,515**	**67%**	**51%**	**(797,008)**	**-24%**
---			---	---	---	---	---	---	---	---
	EXPENDITURES		**3,333,525**		**1,691,011**	**1,642,515**	**67%**	**51%**	**(797,008)**	**-24%**

			CITY OF HATTIESBURG							
	010500 - W&S B&I-TRANSFERS		EXPENDITURE REPORT							
			8 Months Ending 05/31/13							
THIS MONTH			ANNUAL	OPEN PO	YTD	REMAINING	PERCENT		....PROJECTED....	
ACTUAL		OBJ/SUB	BUDGET	& CONTRACTS	ACTUAL	BALANCE	PLAN	ACTUAL	OVER/UNDER	%
	_____									
	_____									
	TRANSFERS TO OTHER FUND									
	T/T W & S RFDG.BONDS	9000 65								
	T/T W & S CONSTRUCTION	9000 75								
----------			---------	---------	---------	---------	-----	-----	--------	-----
	TRANSFERS TO OTHER F									
----------			---------	---------	---------	---------	-----	-----	--------	-----
	TRANSFERS									
----------			---------	---------	---------	---------	-----	-----	--------	-----
	EXPENDITURES									

			CITY OF HATTIESBURG							
	011451 - WATER & SEWER-REV.OBLIGATN		EXPENDITURE REPORT							
			8 Months Ending 05/31/13							
THIS MONTH			ANNUAL	OPEN PO	YTD	REMAINING	PERCENT		....PROJECTED....	
ACTUAL		OBJ/SUB	BUDGET	& CONTRACTS	ACTUAL	BALANCE	PLAN	ACTUAL	OVER/UNDER	%
	_____									
	_____									
	NOTE PRINCIPAL									
30,066	SRF NOTE	8222	358,810		237,407	121,403	67%	66%	(2,699)	-1%
---			---	---	---	---	---	---	---	---
30,066	**NOTE PRINCIPAL**		**358,810**		**237,407**	**121,403**	**67%**	**66%**	**(2,699)**	**-1%**
	INTEREST ON NOTES									
6,039	SRF NOTE	8332	74,460		51,431	23,029	67%	69%	2,686	4%
---			---	---	---	---	---	---	---	---
6,039	**INTEREST ON NOTES**		**74,460**		**51,431**	**23,029**	**67%**	**69%**	**2,686**	**4%**
	CAPITAL LEASE PAYMENTS									
	2012 EQUIP LEASE	8514	104,400			104,400	67%	0%	(104,400)	-100%
---			---	---	---	---	---	---	---	---
	CAPITAL LEASE PAYMEN		**104,400**			**104,400**	**67%**	**0%**	**(104,400)**	**-100%**
	INTEREST ON CAPITAL LEA									
	2012 EQUIP LEASE	8614	7,200			7,200	67%	0%	(7,200)	-100%
---			---	---	---	---	---	---	---	---
	INTEREST ON CAPITAL		**7,200**			**7,200**	**67%**	**0%**	**(7,200)**	**-100%**
---			---	---	---	---	---	---	---	---
36,105	**DEBT SERVICE**		**544,870**		**288,839**	**256,031**	**67%**	**53%**	**(111,611)**	**-20%**
---			---	---	---	---	---	---	---	---
36,105	**EXPENDITURES**		**544,870**		**288,839**	**256,031**	**67%**	**53%**	**(111,611)**	**-20%**

			CITY OF HATTIESBURG							
	011500 - WATER & SEWER-TRANSFERS		EXPENDITURE REPORT							
			8 Months Ending 05/31/13							
THIS MONTH			ANNUAL	OPEN PO	YTD	REMAINING	PERCENT		....PROJECTED....	
ACTUAL		OBJ/SUB	BUDGET	& CONTRACTS	ACTUAL	BALANCE	PLAN	ACTUAL	OVER/UNDER	%
	_____									
	_____									
	TRANSFERS TO OTHER FUND									
4,790	T/T GENERAL FUND	9000 01	432,475		38,317	394,158	67%	9%	(374,999)	-87%
664,358	T/T WATER & SEWER O&M	9000 09	7,972,295		5,314,864	2,657,431	67%	67%	1	0%
	T/T WATER & SEWER B&I	9000 10								
158,558	T/T WATER & SEWER B&I	9000 10A	1,902,700		1,268,467	634,233	67%	67%		0%
73,480	T/T WATER & SEWER B&I	9000 10B	881,760		587,840	293,920	67%	67%		0%
75,000	T/T W&SB&I (METER GO)	9000 10M	900,000		600,000	300,000	67%	67%		0%
25,833	T/T W&SB&I-USA YEAST P	9000 15	310,000		206,667	103,333	67%	67%		0%
	T/T WATER & SEWER CONT	9000 17								
154,351	T/T W & S CONSTRUCTION	9000 75	1,800,000		1,469,661	330,339	67%	82%	404,491	22%
----------			---------	---------	---------	---------	-----	-----	--------	-----
1,156,370	**TRANSFERS TO OTHER F**		**14,199,230**		**9,485,814**	**4,713,416**	**67%**	**67%**	**29,491**	**0%**
----------			---------	---------	---------	---------	-----	-----	--------	-----
1,156,370	**TRANSFERS**		**14,199,230**		**9,485,814**	**4,713,416**	**67%**	**67%**	**29,491**	**0%**
----------			---------	---------	---------	---------	-----	-----	--------	-----
1,156,370	**EXPENDITURES**		**14,199,230**		**9,485,814**	**4,713,416**	**67%**	**67%**	**29,491**	**0%**

			CITY OF HATTIESBURG							
	011660 - WATER & SEWER-CUST.ACCT.DIV.		EXPENDITURE REPORT							
			8 Months Ending 05/31/13							
THIS MONTH			ANNUAL	OPEN PO	YTD	REMAINING	PERCENT		....PROJECTED....	
ACTUAL		OBJ/SUB	BUDGET	& CONTRACTS	ACTUAL	BALANCE	PLAN	ACTUAL	OVER/UNDER	%
	_____									
	_____									
	OTHER SERVICES & CHARGE									
	DEPR. EXPENSE - METERS	6800								
	CASH OVERAGE/SHORTAGE	6819								
164	BANK SERV/TRF FEE	6832	2,400		1,170	1,230	67%	49%	(644)	-27%
	REFUNDS	6835								
693	WATER RELATED REFUND	6835 WTR	18,000		10,335	7,665	67%	57%	(2,497)	-14%
---			---	---	---	---	---	---	---	---
693	**REFUNDS**		**18,000**		**10,335**	**7,665**	**67%**	**57%**	**(2,497)**	**-14%**
	NSF CHECKS	6836								
	BAD DEBT EXPENSE	6837								
	BANK NSF FEES	6838	2,000		294	1,706	67%	15%	(1,558)	-78%
	OTHER INCOME EXPENSE	6839								
---			---	---	---	---	---	---	---	---
858	**OTHER SERVICES & CHA**		**22,400**		**11,800**	**10,600**	**67%**	**53%**	**(4,700)**	**-21%**
---			---	---	---	---	---	---	---	---
858	**OTHER SERVICES & CHAR**		**22,400**		**11,800**	**10,600**	**67%**	**53%**	**(4,700)**	**-21%**
---			---	---	---	---	---	---	---	---
858	**EXPENDITURES**		**22,400**		**11,800**	**10,600**	**67%**	**53%**	**(4,700)**	**-21%**

			CITY OF HATTIESBURG							
	012452 - 1999 TAX INCRE B&I-GENOBLIGA		EXPENDITURE REPORT							
			8 Months Ending 05/31/13							
THIS MONTH			ANNUAL	OPEN PO	YTD	REMAINING	PERCENT		....PROJECTED....	
ACTUAL		OBJ/SUB	BUDGET	& CONTRACTS	ACTUAL	BALANCE	PLAN	ACTUAL	OVER/UNDER	%
	_____									
	_____									
	OTHER SERVICES & CHARGE									
	PROP.TAX COLL. FEES .0	6830								
	PROP.TAX COLL. FEES.00	6831								
	BANK SERV/TRF FEE	6832								
---			---	---	---	---	---	---	---	---
	OTHER SERVICES & CHA									
---			---	---	---	---	---	---	---	---
	OTHER SERVICES & CHAR									
	_____									
	BONDS REDEEMED									
	IND/ECON DEV ISSUES	8020	55,000		55,000		67%	100%	27,500	50%
---			---	---	---	---	---	---	---	---
	BONDS REDEEMED		**55,000**		**55,000**		**67%**	**100%**	**27,500**	**50%**
	INTEREST ON BONDS									
	IND/ECON DEV ISSUES	8120	9,200		9,188	13	67%	100%	4,582	50%
---			---	---	---	---	---	---	---	---
	INTEREST ON BONDS		**9,200**		**9,188**	**13**	**67%**	**100%**	**4,582**	**50%**
	PAYING AGENT FEES									
	IND/ECON DEV ISSUES	8420	2,000		1,740	260	67%	87%	610	31%
---			---	---	---	---	---	---	---	---
	PAYING AGENT FEES		**2,000**		**1,740**	**260**	**67%**	**87%**	**610**	**31%**
---			---	---	---	---	---	---	---	---
	DEBT SERVICE		**66,200**		**65,928**	**273**	**67%**	**100%**	**32,692**	**49%**
---			---	---	---	---	---	---	---	---
	EXPENDITURES		**66,200**		**65,928**	**273**	**67%**	**100%**	**32,692**	**49%**

CITY OF HATTIESBURG
013450 - CITY B&I-GENERAL OBLIGATIONS
EXPENDITURE REPORT
8 Months Ending 05/31/13

THIS MONTH ACTUAL		OBJ/SUB	ANNUAL BUDGET	OPEN PO & CONTRACTS	YTD ACTUAL	REMAINING BALANCE	PERCENT PLAN	PERCENT ACTUAL	....PROJECTED.... OVER/UNDER	%
	INTERGOV'TL-DEBT SERV									
	P&I-FORREST CTY(KOHLER	6455	88,259		73,549	14,710	67%	83%	22,064	25%
	INTERGOV'TL-DEBT SER		**88,259**		**73,549**	**14,710**	**67%**	**83%**	**22,064**	**25%**
	OTHER SERVICES & CHARGE									
1,075	PROP.TAX COLL. FEES .0	6830	14,000		7,525	6,475	67%	54%	(2,712)	-19%
252	PROP.TAX COLL. FEES.00	6831	14,500		11,804	2,696	67%	81%	3,206	22%
	BANK SERV/TRF FEE	6832								
1,327	**OTHER SERVICES & CHA**		**28,500**		**19,329**	**9,171**	**67%**	**68%**	**493**	**2%**
1,327	**OTHER SERVICES & CHAR**		**116,759**		**92,878**	**23,881**	**67%**	**80%**	**22,558**	**19%**
	BONDS REDEEMED									
	GENERAL ISSUES	8000	2,255,000		2,165,000	90,000	67%	96%	992,500	44%
	IND/ECON DEV ISSUES	8020	400,000		380,253	19,747	67%	95%	170,379	43%
321,011	5 YEAR NOTE PRINCIPAL	8021	635,730		635,727	3	67%	100%	317,860	50%
321,011	**BONDS REDEEMED**		**3,290,730**		**3,180,980**	**109,750**	**67%**	**97%**	**1,480,740**	**45%**
	INTEREST ON BONDS									
	GENERAL ISSUES	8100	582,113		411,688	170,426	67%	71%	35,419	6%
	IND/ECON DEV ISSUES	8120	30,000		898	29,102	67%	3%	(28,652)	-96%
9,271	5 YEAR NOTE INTEREST	8121	24,500		23,622	878	67%	96%	10,933	45%
9,271	**INTEREST ON BONDS**		**636,613**		**436,208**	**200,405**	**67%**	**69%**	**17,699**	**3%**
	PAYING AGENT FEES									
	GENERAL ISSUES	8400	15,000		9,365	5,635	67%	62%	(952)	-6%
	IND/ECON DEV ISSUES	8420								
	PAYING AGENT FEES		**15,000**		**9,365**	**5,635**	**67%**	**62%**	**(952)**	**-6%**
330,282	**DEBT SERVICE**		**3,942,343**		**3,626,552**	**315,791**	**67%**	**92%**	**1,497,485**	**38%**
331,609	**EXPENDITURES**		**4,059,102**		**3,719,431**	**339,671**	**67%**	**92%**	**1,520,044**	**37%**

			CITY OF HATTIESBURG							
	014599 - SCHOOL FUND-MISC.CHARGES		EXPENDITURE REPORT							
			8 Months Ending 05/31/13							
THIS MONTH			ANNUAL	OPEN PO	YTD	REMAINING	PERCENT		....PROJECTED....	
ACTUAL		OBJ/SUB	BUDGET	& CONTRACTS	ACTUAL	BALANCE	PLAN	ACTUAL	OVER/UNDER	%
	_____									
	_____									
	OTHER SERVICES & CHARGE									
7,314	PROP.TAX COLL. FEES .0	6830			51,315	(51,315)			76,972	
1,119	PROP.TAX COLL. FEES.00	6831			79,331	(79,331)			118,996	
----------			---------	---------	---------	---------	-----	-----	--------	-----
8,433	**OTHER SERVICES & CHA**				**130,646**	**(130,646)**			**195,969**	
----------			---------	---------	---------	---------	-----	-----	--------	-----
8,433	**OTHER SERVICES & CHAR**				**130,646**	**(130,646)**			**195,969**	
----------			---------	---------	---------	---------	-----	-----	--------	-----
8,433	**EXPENDITURES**				**130,646**	**(130,646)**			**195,969**	

			CITY OF HATTIESBURG							
	015451 - W&S B&I USA YEAST-REVOBLIGA		EXPENDITURE REPORT							
			8 Months Ending 05/31/13							
THIS MONTH			ANNUAL	OPEN PO	YTD	REMAINING	PERCENT		....PROJECTED....	
ACTUAL		OBJ/SUB	BUDGET	& CONTRACTS	ACTUAL	BALANCE	PLAN	ACTUAL	OVER/UNDER	%
	_____									
	_____									
	BONDS REDEEMED									
	REVENUE ISSUES	8010	385,000			385,000	67%	0%	(385,000)	-100%
----------			---------	---------	---------	---------	-----	-----	--------	-----
	BONDS REDEEMED		**385,000**			**385,000**	**67%**	**0%**	**(385,000)**	**-100%**
	INTEREST ON BONDS									
	REVENUE ISSUES	8110	23,100		11,550	11,550	67%	50%	(5,774)	-25%
----------			---------	---------	---------	---------	-----	-----	--------	-----
	INTEREST ON BONDS		**23,100**		**11,550**	**11,550**	**67%**	**50%**	**(5,774)**	**-25%**
	PAYING AGENT FEES									
	REVENUE ISSUES	8410	5,000			5,000	67%	0%	(5,000)	-100%
----------			---------	---------	---------	---------	-----	-----	--------	-----
	PAYING AGENT FEES		**5,000**			**5,000**	**67%**	**0%**	**(5,000)**	**-100%**
----------			---------	---------	---------	---------	-----	-----	--------	-----
	DEBT SERVICE		**413,100**		**11,550**	**401,550**	**67%**	**3%**	**(395,774)**	**-96%**
----------			---------	---------	---------	---------	-----	-----	--------	-----
	EXPENDITURES		**413,100**		**11,550**	**401,550**	**67%**	**3%**	**(395,774)**	**-96%**

			CITY OF HATTIESBURG							
	018701 - P&FD&R-TRUST AND AGENCY		EXPENDITURE REPORT							
			8 Months Ending 05/31/13							
THIS MONTH			ANNUAL	OPEN PO	YTD	REMAINING	PERCENT		....PROJECTED....	
ACTUAL		OBJ/SUB	BUDGET	& CONTRACTS	ACTUAL	BALANCE	PLAN	ACTUAL	OVER/UNDER	%
	_____									
	_____									
	PROFESSIONAL SERVICES									
	AUDITING AND ACCOUNTIN	6010								
585	OTHER PROFESSIONAL SER	6049			29,288	(29,288)			43,932	
---			---	---	---	---	---	---	---	---
585	**PROFESSIONAL SERVICE**				**29,288**	**(29,288)**			**43,932**	
	OTHER SERVICES & CHANGE									
220,540	PENSION EXPENSE	6825			2,437,141	(2,437,141)			3,655,711	
588	PROP.TAX COLL. FEES .0	6830			4,278	(4,278)			6,417	
138	PROP.TAX COLL. FEES.00	6831			6,445	(6,445)			9,667	
	REFUNDS	6835								
	PFDR ACC. CONTRI. REF	6835 PFDR								
---			---	---	---	---	---	---	---	---
	REFUNDS									
---			---	---	---	---	---	---	---	---
221,266	**OTHER SERVICES & CHA**				**2,447,865**	**(2,447,865)**			**3,671,797**	
---			---	---	---	---	---	---	---	---
221,852	**OTHER SERVICES & CHAR**				**2,477,152**	**(2,477,152)**			**3,715,728**	
---			---	---	---	---	---	---	---	---
221,852	**EXPENDITURES**				**2,477,152**	**(2,477,152)**			**3,715,728**	

			CITY OF HATTIESBURG							
	019100 - POL.FORFEITURES-POLICEDIV.		EXPENDITURE REPORT							
			8 Months Ending 05/31/13							
THIS MONTH			ANNUAL	OPEN PO	YTD	REMAINING	PERCENT		....PROJECTED....	
ACTUAL		OBJ/SUB	BUDGET	& CONTRACTS	ACTUAL	BALANCE	PLAN	ACTUAL	OVER/UNDER	%
	_____									
	_____									
	OFFICE SUPPLIES									
	OTHER EXPENDABLE OFF.S	5010								
---			---	---	---	---	---	---	---	---
	OFFICE SUPPLIES									
	OPERATING SUPPLIES									
	FOOD	5115								
	GAS AND OIL	5250								
	UNIFORMS, BADGES, ETC.	5350								
	WEARING APPAREL	5355								
	WEARING APPAREL-HURR R	5356								
	MINOR EQUIPMENT	5460								
	DISPATCHER TRNG.MATERI	5468								
	MINOR EQ-HURR.RELIEF	5471								
	OTHER OPER.MATLS-K-9 S	5590								
	OTHER OPER.MATLS-CRIME	5591	16,029		2,553	13,476	67%	16%	(12,199)	-76%
2,252	OTHER OPER.MATLS-D.A.R	5592	136,471		15,485	120,986	67%	11%	(113,243)	-83%
	OTHER OPER-NON-SWORN C	5595								
	PAINT AND PAINTING SPL	5650								
	COMMUNICATION REPAIR P	5750								
	MINOR COMPUTER EQUIP.	5800								
---			---	---	---	---	---	---	---	---
2,252	**OPERATING SUPPLIES**		**152,500**		**18,038**	**134,462**	**67%**	**12%**	**(125,442)**	**-82%**
---			---	---	---	---	---	---	---	---
2,252	**SUPPLIES AND EXPENSES**		**152,500**		**18,038**	**134,462**	**67%**	**12%**	**(125,442)**	**-82%**
	_____									
	PROFESSIONAL SERVICES									
	METRO CRIME STOPPERS	6039	10,000			10,000	67%	0%	(10,000)	-100%
	FEES - NON-SWORN CLASS	6044								
	OTHER PROFESSIONAL SER	6049								
---			---	---	---	---	---	---	---	---
	PROFESSIONAL SERVICE		**10,000**			**10,000**	**67%**	**0%**	**(10,000)**	**-100%**
	COMMUNICATIONS									
	TELEPHONE AND TELEGRAP	6060								
---			---	---	---	---	---	---	---	---
	COMMUNICATIONS									

			CITY OF HATTIESBURG							
	019100 - POL.FORFEITURES-POLICEDIV.		EXPENDITURE REPORT							
			8 Months Ending 05/31/13							
THIS MONTH			ANNUAL	OPEN PO	YTD	REMAINING	PERCENT		....PROJECTED....	
ACTUAL		OBJ/SUB	BUDGET	& CONTRACTS	ACTUAL	BALANCE	PLAN	ACTUAL	OVER/UNDER	%
	TRANSPORTATION									
	TRAVEL EXPENSE	6110								
	TRAVEL EXP-M/C TRAININ	6112	6,000		5,981	19	67%	100%	2,971	50%
	TRAVEL EXP-K-9 TRAININ	6113								
(818)	TRAVEL EXP-TELECOMMUNI	6114	3,561		2,422	1,139	67%	68%	72	2%
	TRAVEL/REG-NON SWORN P	6117								
	FREIGHT	6120								
---			---	---	---	---	---	---	---	---
(818)	**TRANSPORTATION**		**9,561**		**8,403**	**1,158**	**67%**	**88%**	**3,043**	**32%**
	ADVERTISING									
	ADVERTISING	6150								
---			---	---	---	---	---	---	---	---
	ADVERTISING									
	PRINTING AND BINDING									
	PRINTING	6200								
---			---	---	---	---	---	---	---	---
	PRINTING AND BINDING									
	OTHER SERVICES & CHARGE									
	EVIDENCE BUY MONEY	6817	5,000			5,000	67%	0%	(5,000)	-100%
	GRANT RELATED REFUND	6835 STATE								
---			---	---	---	---	---	---	---	---
	EVIDENCE BUY MONEY		**5,000**			**5,000**	**67%**	**0%**	**(5,000)**	**-100%**
	DUES AND MEMBERSHIPS	6840	2,500		2,500		67%	100%	1,250	50%
	REGISTRATION FEE/TUITI	6845								
---			---	---	---	---	---	---	---	---
	OTHER SERVICES & CHA		**7,500**		**2,500**	**5,000**	**67%**	**33%**	**(3,750)**	**-50%**
---			---	---	---	---	---	---	---	---
(818)	**OTHER SERVICES & CHAR**		**27,061**		**10,903**	**16,158**	**67%**	**40%**	**(10,706)**	**-40%**
	_____									
	LAND									
	LAND	7000								
---			---	---	---	---	---	---	---	---
	LAND									
	BUILDING/BLD IMPROVEMEN									
	BUILDINGS	7100								
	POLICE SERV CTR BLDG	7100 22								
---			---	---	---	---	---	---	---	---

			CITY OF HATTIESBURG							
	019100 - POL.FORFEITURES-POLICEDIV.		EXPENDITURE REPORT							
			8 Months Ending 05/31/13							
THIS MONTH			ANNUAL	OPEN PO	YTD	REMAINING	PERCENT		....PROJECTED....	
ACTUAL		OBJ/SUB	BUDGET	& CONTRACTS	ACTUAL	BALANCE	PLAN	ACTUAL	OVER/UNDER	%
	BUILDINGS									
---			---	---	---	---	---	---	---	---
	BUILDING/BLD IMPROVE									
	MACHINERY AND EQUIPMENT									
	OFFICE FURN/EQUIP.	7325								
	DATA PROCESSING EQUIP.	7327								
	COMMUNICATION EQUIPMEN	7355								
	EQUIP-HURR.RELIEF	7376								
	OTHER EQUIPMENT	7399	49,336			49,336	67%	0%	(49,336)	-100%
---			---	---	---	---	---	---	---	---
	MACHINERY AND EQUIPM		**49,336**			**49,336**	**67%**	**0%**	**(49,336)**	**-100%**
	VEHICLES									
22,782	AUTOMOBILES	7400	48,311		48,307	4	67%	100%	24,149	50%
	MOTORCYCLES	7405								
---			---	---	---	---	---	---	---	---
22,782	**VEHICLES**		**48,311**		**48,307**	**4**	**67%**	**100%**	**24,149**	**50%**
	OTHER									
	ZOOLOGICAL ANIMALS	7505								
---			---	---	---	---	---	---	---	---
	OTHER									
---			---	---	---	---	---	---	---	---
22,782	**CAPITAL OUTLAY**		**97,647**		**48,307**	**49,340**	**67%**	**49%**	**(25,186)**	**-26%**
---			---	---	---	---	---	---	---	---
24,216	**EXPENDITURES**		**277,208**		**77,248**	**199,960**	**67%**	**28%**	**(161,336)**	**-58%**

			CITY OF HATTIESBURG							
	020452 - 2002 TIF B&I-S/P GEN OBLIGA		EXPENDITURE REPORT							
			8 Months Ending 05/31/13							
THIS MONTH			ANNUAL	OPEN PO	YTD	REMAINING	PERCENT		....PROJECTED....	
ACTUAL		OBJ/SUB	BUDGET	& CONTRACTS	ACTUAL	BALANCE	PLAN	ACTUAL	OVER/UNDER	%
	_____									
	_____									
	OTHER SERVICES & CHARGE									
	PROP.TAX COLL. FEES .0	6830								
	PROP.TAX COLL. FEES.00	6831								
	BANK SERV/TRF FEE	6832	50		35	15	67%	70%	2	4%
---			---	---	---	---	---	---	---	---
	OTHER SERVICES & CHA		**50**		**35**	**15**	**67%**	**70%**	**2**	**4%**
---			---	---	---	---	---	---	---	---
	OTHER SERVICES & CHAR		**50**		**35**	**15**	**67%**	**70%**	**2**	**4%**
	_____									
	BONDS REDEEMED									
	IND/ECON DEV ISSUES	8020	85,000		85,000		67%	100%	42,500	50%
---			---	---	---	---	---	---	---	---
	BONDS REDEEMED		**85,000**		**85,000**		**67%**	**100%**	**42,500**	**50%**
	INTEREST ON BONDS									
	IND/ECON DEV ISSUES	8120	3,825		3,825		67%	100%	1,912	50%
---			---	---	---	---	---	---	---	---
	INTEREST ON BONDS		**3,825**		**3,825**		**67%**	**100%**	**1,912**	**50%**
	PAYING AGENT FEES									
	IND/ECON DEV ISSUES	8420	1,200		550	650	67%	46%	(374)	-31%
---			---	---	---	---	---	---	---	---
	PAYING AGENT FEES		**1,200**		**550**	**650**	**67%**	**46%**	**(374)**	**-31%**
---			---	---	---	---	---	---	---	---
	DEBT SERVICE		**90,025**		**89,375**	**650**	**67%**	**99%**	**44,037**	**49%**
---			---	---	---	---	---	---	---	---
	EXPENDITURES		**90,075**		**89,410**	**665**	**67%**	**99%**	**44,040**	**49%**

			CITY OF HATTIESBURG							
	021452 - 2004 TIF B&I-H/D GEN OBLIGA		EXPENDITURE REPORT							
			8 Months Ending 05/31/13							
THIS MONTH			ANNUAL	OPEN PO	YTD	REMAINING	PERCENT		....PROJECTED....	
ACTUAL		OBJ/SUB	BUDGET	& CONTRACTS	ACTUAL	BALANCE	PLAN	ACTUAL	OVER/UNDER	%
	_____									
	_____									
	OTHER SERVICES & CHARGE									
	PROP.TAX COLL. FEES .0	6830								
	PROP.TAX COLL. FEES.00	6831								
	BANK SERV/TRF FEE	6832								
---			---	---	---	---	---	---	---	---
	OTHER SERVICES & CHA									
---			---	---	---	---	---	---	---	---
	OTHER SERVICES & CHAR									
	_____									
	BONDS REDEEMED									
	IND/ECON DEV ISSUES	8020	75,000		75,000		67%	100%	37,500	50%
---			---	---	---	---	---	---	---	---
	BONDS REDEEMED		**75,000**		**75,000**		**67%**	**100%**	**37,500**	**50%**
	INTEREST ON BONDS									
	IND/ECON DEV ISSUES	8120	8,345		8,345		67%	100%	4,172	50%
---			---	---	---	---	---	---	---	---
	INTEREST ON BONDS		**8,345**		**8,345**		**67%**	**100%**	**4,172**	**50%**
	PAYING AGENT FEES									
	IND/ECON DEV ISSUES	8420	1,000		750	250	67%	75%	125	13%
---			---	---	---	---	---	---	---	---
	PAYING AGENT FEES		**1,000**		**750**	**250**	**67%**	**75%**	**125**	**13%**
---			---	---	---	---	---	---	---	---
	DEBT SERVICE		**84,345**		**84,095**	**250**	**67%**	**100%**	**41,797**	**50%**
---			---	---	---	---	---	---	---	---
	EXPENDITURES		**84,345**		**84,095**	**250**	**67%**	**100%**	**41,797**	**50%**

			CITY OF HATTIESBURG							
	022452 - 2003 TIF B&I-C/S GEN OBLIGA		EXPENDITURE REPORT							
			8 Months Ending 05/31/13							
THIS MONTH			ANNUAL	OPEN PO	YTD	REMAINING	PERCENT		....PROJECTED....	
ACTUAL		OBJ/SUB	BUDGET	& CONTRACTS	ACTUAL	BALANCE	PLAN	ACTUAL	OVER/UNDER	%
	_____									
	_____									
	OTHER SERVICES & CHARGE									
	PROP.TAX COLL. FEES .0	6830								
	PROP.TAX COLL. FEES.00	6831								
	BANK SERV/TRF FEE	6832								
---			---	---	---	---	---	---	---	---
	OTHER SERVICES & CHA									
---			---	---	---	---	---	---	---	---
	OTHER SERVICES & CHAR									
	_____									
	BONDS REDEEMED									
	IND/ECON DEV ISSUES	8020	95,000		40,000	55,000	67%	42%	(35,000)	-37%
---			---	---	---	---	---	---	---	---
	BONDS REDEEMED		**95,000**		**40,000**	**55,000**	**67%**	**42%**	**(35,000)**	**-37%**
	INTEREST ON BONDS									
	IND/ECON DEV ISSUES	8120	97,210		56,700	40,510	67%	58%	(12,160)	-13%
---			---	---	---	---	---	---	---	---
	INTEREST ON BONDS		**97,210**		**56,700**	**40,510**	**67%**	**58%**	**(12,160)**	**-13%**
	PAYING AGENT FEES									
1,000	IND/ECON DEV ISSUES	8420	2,000		2,000		67%	100%	1,000	50%
---			---	---	---	---	---	---	---	---
1,000	**PAYING AGENT FEES**		**2,000**		**2,000**		**67%**	**100%**	**1,000**	**50%**
---			---	---	---	---	---	---	---	---
1,000	**DEBT SERVICE**		**194,210**		**98,700**	**95,510**	**67%**	**51%**	**(46,160)**	**-24%**
---			---	---	---	---	---	---	---	---
1,000	**EXPENDITURES**		**194,210**		**98,700**	**95,510**	**67%**	**51%**	**(46,160)**	**-24%**

			CITY OF HATTIESBURG							
	022500 - '03 TIF B&I-C/S-TRANSFERS		EXPENDITURE REPORT							
			8 Months Ending 05/31/13							
THIS MONTH			ANNUAL	OPEN PO	YTD	REMAINING	PERCENT		....PROJECTED....	
ACTUAL		OBJ/SUB	BUDGET	& CONTRACTS	ACTUAL	BALANCE	PLAN	ACTUAL	OVER/UNDER	%
	_____									
	_____									
	TRANSFERS TO OTHER FUND									
	T/T GENERAL FUND	9000 01								
----------			---------	---------	---------	---------	-----	-----	--------	-----
	TRANSFERS TO OTHER F									
----------			---------	---------	---------	---------	-----	-----	--------	-----
	TRANSFERS									
----------			---------	---------	---------	---------	-----	-----	--------	-----
	EXPENDITURES									

			CITY OF HATTIESBURG							
	023452 - 2007 TIF B&I-T/C GEN OBLIGA		EXPENDITURE REPORT							
			8 Months Ending 05/31/13							
THIS MONTH			ANNUAL	OPEN PO	YTD	REMAINING	PERCENT		....PROJECTED....	
ACTUAL		OBJ/SUB	BUDGET	& CONTRACTS	ACTUAL	BALANCE	PLAN	ACTUAL	OVER/UNDER	%
	_____									
	_____									
	OTHER SERVICES & CHARGE									
	PROP.TAX COLL. FEES .0	6830								
	PROP.TAX COLL. FEES.00	6831								
	BANK SERV/TRF FEE	6832								
---			---	---	---	---	---	---	---	---
	OTHER SERVICES & CHA									
---			---	---	---	---	---	---	---	---
	OTHER SERVICES & CHAR									
	_____									
	BONDS REDEEMED									
	IND/ECON DEV ISSUES	8020	285,000		30,000	255,000	67%	11%	(240,000)	-84%
---			---	---	---	---	---	---	---	---
	BONDS REDEEMED		**285,000**		**30,000**	**255,000**	**67%**	**11%**	**(240,000)**	**-84%**
	INTEREST ON BONDS									
	IND/ECON DEV ISSUES	8120	149,776		21,016	128,760	67%	14%	(118,252)	-79%
---			---	---	---	---	---	---	---	---
	INTEREST ON BONDS		**149,776**		**21,016**	**128,760**	**67%**	**14%**	**(118,252)**	**-79%**
	PAYING AGENT FEES									
	IND/ECON DEV ISSUES	8420	5,000			5,000	67%	0%	(5,000)	-100%
---			---	---	---	---	---	---	---	---
	PAYING AGENT FEES		**5,000**			**5,000**	**67%**	**0%**	**(5,000)**	**-100%**
---			---	---	---	---	---	---	---	---
	DEBT SERVICE		**439,776**		**51,016**	**388,760**	**67%**	**12%**	**(363,252)**	**-83%**
---			---	---	---	---	---	---	---	---
	EXPENDITURES		**439,776**		**51,016**	**388,760**	**67%**	**12%**	**(363,252)**	**-83%**

			CITY OF HATTIESBURG							
	024452 - 2008 TIF B&I-L/C GEN OBLIGA		EXPENDITURE REPORT							
			8 Months Ending 05/31/13							
THIS MONTH			ANNUAL	OPEN PO	YTD	REMAINING	PERCENT		....PROJECTED....	
ACTUAL		OBJ/SUB	BUDGET	& CONTRACTS	ACTUAL	BALANCE	PLAN	ACTUAL	OVER/UNDER	%
	_____									
	_____									
	OTHER SERVICES & CHARGE									
	PROP.TAX COLL. FEES .0	6830								
	PROP.TAX COLL. FEES.00	6831								
	BANK SERV/TRF FEE	6832								
---			---	---	---	---	---	---	---	---
	OTHER SERVICES & CHA									
---			---	---	---	---	---	---	---	---
	OTHER SERVICES & CHAR									
	_____									
	BONDS REDEEMED									
	IND/ECON DEV ISSUES	8020	35,000		35,000		67%	100%	17,500	50%
---			---	---	---	---	---	---	---	---
	BONDS REDEEMED		**35,000**		**35,000**		**67%**	**100%**	**17,500**	**50%**
	INTEREST ON BONDS									
	IND/ECON DEV ISSUES	8120	19,400		19,400		67%	100%	9,700	50%
---			---	---	---	---	---	---	---	---
	INTEREST ON BONDS		**19,400**		**19,400**		**67%**	**100%**	**9,700**	**50%**
	PAYING AGENT FEES									
	IND/ECON DEV ISSUES	8420	1,000		850	150	67%	85%	275	28%
---			---	---	---	---	---	---	---	---
	PAYING AGENT FEES		**1,000**		**850**	**150**	**67%**	**85%**	**275**	**28%**
---			---	---	---	---	---	---	---	---
	DEBT SERVICE		**55,400**		**55,250**	**150**	**67%**	**100%**	**27,475**	**50%**
---			---	---	---	---	---	---	---	---
	EXPENDITURES		**55,400**		**55,250**	**150**	**67%**	**100%**	**27,475**	**50%**

			CITY OF HATTIESBURG							
	025452 - 2011 TIF B&I-KOHLS GENOBLIGA		EXPENDITURE REPORT							
			8 Months Ending 05/31/13							
THIS MONTH			ANNUAL	OPEN PO	YTD	REMAINING	PERCENT		....PROJECTED....	
ACTUAL		OBJ/SUB	BUDGET	& CONTRACTS	ACTUAL	BALANCE	PLAN	ACTUAL	OVER/UNDER	%
	_____									
	_____									
	OTHER SERVICES & CHARGE									
	PROP.TAX COLL. FEES .0	6830								
	PROP.TAX COLL. FEES.00	6831								
	BANK SERV/TRF FEE	6832								
---			---	---	---	---	---	---	---	---
	OTHER SERVICES & CHA									
---			---	---	---	---	---	---	---	---
	OTHER SERVICES & CHAR									
	_____									
	BONDS REDEEMED									
60,000	IND/ECON DEV ISSUES	8020	60,000		60,000		67%	100%	30,000	50%
---			---	---	---	---	---	---	---	---
60,000	**BONDS REDEEMED**		**60,000**		**60,000**		**67%**	**100%**	**30,000**	**50%**
	INTEREST ON BONDS									
16,000	IND/ECON DEV ISSUES	8120	32,000		32,000		67%	100%	16,000	50%
---			---	---	---	---	---	---	---	---
16,000	**INTEREST ON BONDS**		**32,000**		**32,000**		**67%**	**100%**	**16,000**	**50%**
	PAYING AGENT FEES									
	IND/ECON DEV ISSUES	8420	2,000		1,940	60	67%	97%	910	46%
---			---	---	---	---	---	---	---	---
	PAYING AGENT FEES		**2,000**		**1,940**	**60**	**67%**	**97%**	**910**	**46%**
---			---	---	---	---	---	---	---	---
76,000	**DEBT SERVICE**		**94,000**		**93,940**	**60**	**67%**	**100%**	**46,910**	**50%**
---			---	---	---	---	---	---	---	---
76,000	**EXPENDITURES**		**94,000**		**93,940**	**60**	**67%**	**100%**	**46,910**	**50%**

			CITY OF HATTIESBURG							
	027500 - TAX COLLECTOR'S-TRANSFERS		EXPENDITURE REPORT							
			8 Months Ending 05/31/13							
THIS MONTH			ANNUAL	OPEN PO	YTD	REMAINING	PERCENT		....PROJECTED....	
ACTUAL		OBJ/SUB	BUDGET	& CONTRACTS	ACTUAL	BALANCE	PLAN	ACTUAL	OVER/UNDER	%
	_____									
	_____									
	TRANSFERS TO OTHER FUND									
(233,391)	T/T GENERAL FUND	9000 01			10,891,530	(10,891,530)			16,337,295	
	T/T GENERAL FD-C.C. FE	9000 01CC								
	T/T GENERAL FD-EXCESS	9000 01EB								
	T/T GENERAL FD-CHKG IN	9000 01ICH	K							
25,761	T/T GENERAL FD-INT/PEN	9000 01IP			150,639	(150,639)			225,958	
20,616	T/T PARKS & RECERATION	9000 02			730,012	(730,012)			1,095,018	
20,078	T/T LIBRARY	9000 04			710,983	(710,983)			1,066,474	
	T/T 1999 TAX INCRE B&I	9000 12			68,300	(68,300)			102,450	
72,117	T/T CITY B & I	9000 13			2,554,797	(2,554,797)			3,832,195	
328,298	T/T SCHOOL FUND	9000 14			14,863,322	(14,863,322)			22,294,983	
43,761	T/T SCHOOL-1988 SCH.BO	9000 14SB			2,002,117	(2,002,117)			3,003,175	
39,449	T/T POL/FIRE DIS./RELI	9000 18			1,404,036	(1,404,036)			2,106,054	
	T/T 2002 TIF B&I-SP	9000 20								
	T/T 2004 TIF B&I-HD	9000 21			57,051	(57,051)			85,576	
203,625	T/T 2003 TIF B&I-CS	9000 22			203,625	(203,625)			305,437	
360,899	T/T 2007 TIF B&I-TC	9000 23			360,899	(360,899)			541,348	
	T/T 2008 TIF B&I-LC	9000 24			67,533	(67,533)			101,299	
	T/T 2011 TIF B&I-TC KO	9000 25			68,410	(68,410)			102,615	
5,130	T/T MASS TRANSIT OPER.	9000 73			181,685	(181,685)			272,527	
	T/T 2008 TIF CONSTR-LC	9000 90								
----------			---------	---------	---------	---------	-----	-----	--------	-----
886,342	**TRANSFERS TO OTHER F**				**34,314,940**	**(34,314,940)**			**51,472,410**	
----------			---------	---------	---------	---------	-----	-----	--------	-----
886,342	**TRANSFERS**				**34,314,940**	**(34,314,940)**			**51,472,410**	
----------			---------	---------	---------	---------	-----	-----	--------	-----
886,342	**EXPENDITURES**				**34,314,940**	**(34,314,940)**			**51,472,410**	

			CITY OF HATTIESBURG							
	039551 - AIRPORT IMPR.-AIRPORTDIV		EXPENDITURE REPORT							
			8 Months Ending 05/31/13							
THIS MONTH			ANNUAL	OPEN PO	YTD	REMAINING	PERCENT		....PROJECTED....	
ACTUAL		OBJ/SUB	BUDGET	& CONTRACTS	ACTUAL	BALANCE	PLAN	ACTUAL	OVER/UNDER	%
	_____									
	_____									
	SALARIES									
	REGULAR WAGES	4000								
	OVERTIME	4300								
---			---	---	---	---	---	---	---	---
	SALARIES									
	EMPLOYEE BENEFITS									
	STATE RETIREMENT	4600								
	F.I.C.A. TAXES	4700								
	HOSPITALIZATION INS.	4800								
---			---	---	---	---	---	---	---	---
	EMPLOYEE BENEFITS									
---			---	---	---	---	---	---	---	---
	PERSONAL SERVICES									
	_____									
	OPERATING SUPPLIES									
	GAS AND OIL	5250								
	MINOR EQUIPMENT	5460								
	OTHER OPERATING MATL/S	5590								
---			---	---	---	---	---	---	---	---
	OPERATING SUPPLIES									
	REPAIR & MAINTENANCE SP									
	PLUMBING SUPPLIES	5610								
	PAINT AND PAINTING SPL	5650								
	OTHER REPAIR/MAINT. SP	5990								
---			---	---	---	---	---	---	---	---
	REPAIR & MAINTENANCE									
---			---	---	---	---	---	---	---	---
	SUPPLIES AND EXPENSES									
	_____									
	PROFESSIONAL SERVICES									
	ENGINEERING	6015								
	LEGAL	6025								
---			---	---	---	---	---	---	---	---
	PROFESSIONAL SERVICE									
	REPR/MAINT-OUTSIDE LABO									

			CITY OF HATTIESBURG							
	039551 - AIRPORT IMPR.-AIRPORTDIV		EXPENDITURE REPORT							
			8 Months Ending 05/31/13							
THIS MONTH			ANNUAL	OPEN PO	YTD	REMAINING	PERCENT		....PROJECTED....	
ACTUAL		OBJ/SUB	BUDGET	& CONTRACTS	ACTUAL	BALANCE	PLAN	ACTUAL	OVER/UNDER	%
	BUILDING R&M	6350								
	STREETS & STRUCTURES R	6360								
	DISINFECT./EXTERMINATI	6394								
	OTHER REPAIRS AND MAIN	6399								
	AUTOMOTIVE EQ. RENT	6415								
	OTHER RENT	6449								
---			---	---	---	---	---	---	---	---
	REPR/MAINT-OUTSIDE L									
---			---	---	---	---	---	---	---	---
	OTHER SERVICES & CHAR									
	_____									
	IMPROVEMENT OTHER THAN									
	STREETS & ROADWAYS	7230								
	STREET LIGHTING	7235								
	LIGHTING SYSTEM	7236								
	OTHER IMPROVEMENTS	7295								
	AIRPORT SIGN	7295 01								
22,112	AIRPORT IMP-FAA	7295 02	1,437,993		262,821	1,175,172	67%	18%	(1,043,761)	-73%
	MDOT-MULTIMODAL	7295 06								
	MISC.OTHER IMPROVEMEN	7295 99	11,000		11,000		67%	100%	5,500	50%
---			---	---	---	---	---	---	---	---
22,112	**OTHER IMPROVEMENTS**		**1,448,993**		**273,821**	**1,175,172**	**67%**	**19%**	**(1,038,261)**	**-72%**
---			---	---	---	---	---	---	---	---
22,112	**IMPROVEMENT OTHER TH**		**1,448,993**		**273,821**	**1,175,172**	**67%**	**19%**	**(1,038,261)**	**-72%**
	MACHINERY AND EQUIPMENT									
	DATA PROCESSING EQUIP.	7327								
	AGRICULTURAL EQUIPMENT	7335								
	COMMUNICATION EQUIPMEN	7355								
	OTHER EQUIPMENT	7399								
---			---	---	---	---	---	---	---	---
	MACHINERY AND EQUIPM									
---			---	---	---	---	---	---	---	---
22,112	**CAPITAL OUTLAY**		**1,448,993**		**273,821**	**1,175,172**	**67%**	**19%**	**(1,038,261)**	**-72%**
---			---	---	---	---	---	---	---	---
22,112	**EXPENDITURES**		**1,448,993**		**273,821**	**1,175,172**	**67%**	**19%**	**(1,038,261)**	**-72%**

			CITY OF HATTIESBURG							
	050602 - 2009 RFDG BONDS-ISSUEEXP		EXPENDITURE REPORT							
			8 Months Ending 05/31/13							
THIS MONTH			ANNUAL	OPEN PO	YTD	REMAINING	PERCENT		....PROJECTED....	
ACTUAL		OBJ/SUB	BUDGET	& CONTRACTS	ACTUAL	BALANCE	PLAN	ACTUAL	OVER/UNDER	%
	_____									
	_____									
	PROFESSIONAL SERVICES									
	CONSULTANT SERV/SURVEY	6020								
	LEGAL	6025								
	OTHER PROFESSIONAL SER	6049								
----------			---------	---------	---------	---------	-----	-----	--------	-----
	PROFESSIONAL SERVICE									
	INSURANCE									
	OTHER INSURANCE	6299								
----------			---------	---------	---------	---------	-----	-----	--------	-----
	INSURANCE									
----------			---------	---------	---------	---------	-----	-----	--------	-----
	OTHER SERVICES & CHAR									
	_____									
	BONDS REDEEMED									
	GENERAL ISSUES	8000								
----------			---------	---------	---------	---------	-----	-----	--------	-----
	BONDS REDEEMED									
	INTEREST ON BONDS									
	GENERAL ISSUES	8100								
----------			---------	---------	---------	---------	-----	-----	--------	-----
	INTEREST ON BONDS									
	PAYING AGENT FEES									
	GENERAL ISSUES	8400								
----------			---------	---------	---------	---------	-----	-----	--------	-----
	PAYING AGENT FEES									
----------			---------	---------	---------	---------	-----	-----	--------	-----
	DEBT SERVICE									
----------			---------	---------	---------	---------	-----	-----	--------	-----
	EXPENDITURES									

			CITY OF HATTIESBURG							
	072201 - MUN.ROAD&BRIDGE-STREETDIV		EXPENDITURE REPORT							
			8 Months Ending 05/31/13							
THIS MONTH			ANNUAL	OPEN PO	YTD	REMAINING	PERCENT		....PROJECTED....	
ACTUAL		OBJ/SUB	BUDGET	& CONTRACTS	ACTUAL	BALANCE	PLAN	ACTUAL	OVER/UNDER	%
	_____									
	_____									
	OPERATING SUPPLIES									
	CHEMICALS	5130								
11,950	ASPHALT & ASPHALT PROD	5400	150,000	24,000	56,468	69,532	67%	38%	(65,298)	-44%
	CONCRETE, CEMENT, ETC.	5405	25,000		2,215	22,785	67%	9%	(21,677)	-87%
	BRICK,STONE,MORTAR,ETC	5410	25,000			25,000	67%	0%	(25,000)	-100%
	SAND,CLAY,GRVL,FILL DI	5415	10,000			10,000	67%	0%	(10,000)	-100%
	DRAINAGE PIPE & CULVER	5420	15,000		983	14,018	67%	7%	(13,525)	-90%
	MINOR EQUIPMENT	5460								
	STREET MARKING SUPPLIE	5550								
----------			---------	---------	---------	---------	-----	-----	--------	-----
11,950	**OPERATING SUPPLIES**		**225,000**	**24,000**	**59,665**	**141,335**	**67%**	**27%**	**(135,502)**	**-60%**
	REPAIR & MAINTENANCE SP									
	BUILDING MATERIALS & S	5600								
	PLUMBING SUPPLIES	5610								
	STRUCTURAL STEEL & IRO	5620								
----------			---------	---------	---------	---------	-----	-----	--------	-----
	REPAIR & MAINTENANCE									
----------			---------	---------	---------	---------	-----	-----	--------	-----
11,950	**SUPPLIES AND EXPENSES**		**225,000**	**24,000**	**59,665**	**141,335**	**67%**	**27%**	**(135,502)**	**-60%**
	_____									
	PROFESSIONAL SERVICES									
44,551	ENGINEERING	6015	261,340		255,946	5,394	67%	98%	122,579	47%
1,800	APPRAISAL	6017	21,875		21,875		67%	100%	10,937	50%
3,774	LEGAL	6025	29,488		29,487	1	67%	100%	14,742	50%
800	OTHER PROFESSIONAL SER	6049	13,287		4,965	8,322	67%	37%	(5,839)	-44%
----------			---------	---------	---------	---------	-----	-----	--------	-----
50,926	**PROFESSIONAL SERVICE**		**325,990**		**312,273**	**13,717**	**67%**	**96%**	**142,419**	**44%**
	TRANSPORTATION									
	TRAVEL EXPENSE	6110								
----------			---------	---------	---------	---------	-----	-----	--------	-----
	TRANSPORTATION									
	REPR/MAINT-OUTSIDE LABO									
	STREETS & STRUCTURES R	6360	313,650		299,138	14,512	67%	95%	135,057	43%
	MINOR EQUIPMENT R&M	6382								
----------			---------	---------	---------	---------	-----	-----	--------	-----

			CITY OF HATTIESBURG							
	072201 - MUN.ROAD&BRIDGE-STREETDIV		EXPENDITURE REPORT							
			8 Months Ending 05/31/13							
THIS MONTH			ANNUAL	OPEN PO	YTD	REMAINING	PERCENT		....PROJECTED....	
ACTUAL		OBJ/SUB	BUDGET	& CONTRACTS	ACTUAL	BALANCE	PLAN	ACTUAL	OVER/UNDER	%
	REPR/MAINT-OUTSIDE L		**313,650**		**299,138**	**14,512**	**67%**	**95%**	**135,057**	**43%**
	RENTALS									
11,597	MACHINERY RENT	6420	68,000		72,161	(4,161)	67%	106%	40,241	59%
11,597	**RENTALS**		**68,000**		**72,161**	**(4,161)**	**67%**	**106%**	**40,241**	**59%**
	OTHER SERVICES & CHARGE									
23	BANK SERV/TRF FEE	6832	10		59	(49)	67%	590%	78	780%
	8/29 TIPPING FEES	6880								
	8/29 TIPPING-PW7311	6880 01								
	8/29 TIPPING-PW8157	6880 02								
	8/29 TIPPING-PW7711	6880 03								
	8/29 TIPPING FEES									
23	**OTHER SERVICES & CHA**		**10**		**59**	**(49)**	**67%**	**590%**	**78**	**780%**
62,546	**OTHER SERVICES & CHAR**		**707,650**		**683,631**	**24,019**	**67%**	**97%**	**317,796**	**45%**
	LAND									
700	LAND	7000	293,000		9,475	283,525	67%	3%	(278,787)	-95%
	EASEMENTS	7010								
700	**LAND**		**293,000**		**9,475**	**283,525**	**67%**	**3%**	**(278,787)**	**-95%**
	IMPROVEMENT OTHER THAN									
	DRAINS	7215								
	MOBILE ST (CDBG)	7215 14								
	DRAINS									
	SIDEWALKS	7225			291	(291)			436	
	SIDEWALKS	7225 01	107,388	3,925	6,846	96,617	67%	6%	(97,118)	-90%
3,866	SIDEWALKS-MDOT-SCHOOL	7225 02	262,000		9,564	252,436	67%	4%	(247,654)	-95%
2,592	SIDEWALKS-LONG LEAF T	7225 03	123,003		58,950	64,053	67%	48%	(34,577)	-28%
	SIDEWALKS-HWY 49	7225 04	63,600			63,600	67%	0%	(63,600)	-100%
6,458	**SIDEWALKS**		**555,991**	**3,925**	**75,651**	**476,415**	**67%**	**14%**	**(442,514)**	**-80%**
	STREETS & ROADWAYS	7230								
	INDUSTRIAL PARK ROADS	7230 02								

			CITY OF HATTIESBURG							
	072201 - MUN.ROAD&BRIDGE-STREETDIV		EXPENDITURE REPORT							
			8 Months Ending 05/31/13							
THIS MONTH			ANNUAL	OPEN PO	YTD	REMAINING	PERCENT		....PROJECTED....	
ACTUAL		OBJ/SUB	BUDGET	& CONTRACTS	ACTUAL	BALANCE	PLAN	ACTUAL	OVER/UNDER	%
	WESTERN BELTWAY	7230 03	475,000		65,010	409,990	67%	14%	(377,484)	-79%
	NORTH-SOUTH CORRIDOR-	7230 04								
	RAILROAD CROSSING UPG	7230 05	5,000		2,221	2,779	67%	44%	(1,668)	-33%
26,212	BIKE LANES	7230 06	55,500		55,070	430	67%	99%	27,105	49%
82,054	MDOT-4TH ST PHASE I	7230 08	3,388,425		83,510	3,304,915	67%	2%	(3,263,159)	-96%
	MDOT-4TH ST PHASE II	7230 09	771,400			771,400	67%	0%	(771,400)	-100%
	MDOT-FUTURE PROJECT	7230 10								
	E.4TH STREET	7230 11								
	LAKEVIEW BRIDGE NORTH	7230 21								
	LAKEVIEW BRIDGE SOUTH	7230 22								
	FORREST STREET BRIDGE	7230 24								
18,168	CTRY.CLUB RD. INTERSE	7230 25	375,000		54,324	320,676	67%	14%	(293,514)	-78%
	TATUM BLVD.IMPROVEMEN	7230 26								
	DOWNTOWN STREET IMPRO	7230 27	443,456		91,778	351,679	67%	21%	(305,788)	-69%
	WEATHERSBY-S US HWY 9	7230 28								
	MAMIE ST RELOCATION	7230 34								
	MDOT-B'WAY,MOBILE TE	7230 39	725,000			725,000	67%	0%	(725,000)	-100%
	MDOT-34TH AVE TE	7230 40	141,247			141,247	67%	0%	(141,247)	-100%
	MCLEOD ST BRIDGE	7230 41								
	BROAD ST BRIDGE	7230 42								
	HARDY WIDENING #1-MDO	7230 48								
	RAWLS SPGS LOOP RD	7230 50								
	MDOT-LLT-US 49 TO MAI	7230 51	961,000			961,000	67%	0%	(961,000)	-100%
117,067	HARDY WIDENING #2-MDO	7230 52	683,600		683,483	117	67%	100%	341,624	50%
	ARRA-W PINE-B'WAY TO	7230 53								
	CORRIDOR/INTERSECT.IM	7230 75		945		(945)				
	CHAUVET SQUARE PROJEC	7230 81								
	OTHER STREET IMPR.	7230 99	50,000	37,217		12,783	67%	0%	(50,000)	-100%
---			---	---	---	---	---	---	---	---
243,500	**STREETS & ROADWAYS**		**8,074,628**	**38,162**	**1,035,397**	**7,001,069**	**67%**	**13%**	**(6,521,532)**	**-81%**
	OTHER IMPROVEMENTS	7295								
	TRAF.SIGNAL UPGRADE-I	7295 28	144,400		136,284	8,116	67%	94%	60,026	42%
	TRAF.SIGNAL-SOUTHERN	7295 29								
	TRAF.SIGNAL-TATUM/BON	7295 41	176,566			176,566	67%	0%	(176,566)	-100%
---			---	---	---	---	---	---	---	---
	OTHER IMPROVEMENTS		**320,966**		**136,284**	**184,682**	**67%**	**42%**	**(116,540)**	**-36%**
---			---	---	---	---	---	---	---	---

			CITY OF HATTIESBURG							
	072201 - MUN.ROAD&BRIDGE-STREETDIV		EXPENDITURE REPORT							
			8 Months Ending 05/31/13							
THIS MONTH			ANNUAL	OPEN PO	YTD	REMAINING	PERCENT		....PROJECTED....	
ACTUAL		OBJ/SUB	BUDGET	& CONTRACTS	ACTUAL	BALANCE	PLAN	ACTUAL	OVER/UNDER	%
249,959	**IMPROVEMENT OTHER TH**		**8,951,585**	**42,087**	**1,247,333**	**7,662,165**	**67%**	**14%**	**(7,080,585)**	**-79%**
	MACHINERY AND EQUIPMENT									
	AGRICULTURAL EQUIPMENT	7335								
	CONSTRUCTION EQUIPMENT	7345								
----------			---------	---------	---------	---------	-----	-----	--------	-----
	MACHINERY AND EQUIPM									
	VEHICLES									
	AUTOMOBILES	7400								
	PICK UP TRUCKS	7420								
	DUMP TRUCKS	7440								
	SPECIAL TRUCKS	7450								
----------			---------	---------	---------	---------	-----	-----	--------	-----
	VEHICLES									
----------			---------	---------	---------	---------	-----	-----	--------	-----
250,659	**CAPITAL OUTLAY**		**9,244,585**	**42,087**	**1,256,807**	**7,945,691**	**67%**	**14%**	**(7,359,374)**	**-80%**
----------			---------	---------	---------	---------	-----	-----	--------	-----
325,154	**EXPENDITURES**		**10,177,235**	**66,087**	**2,000,104**	**8,111,044**	**67%**	**20%**	**(7,177,079)**	**-71%**

			CITY OF HATTIESBURG							
	072460 - MUN.R&B FUND-CAPITAL LEASES		EXPENDITURE REPORT							
			8 Months Ending 05/31/13							
THIS MONTH			ANNUAL	OPEN PO	YTD	REMAINING	PERCENT		....PROJECTED....	
ACTUAL		OBJ/SUB	BUDGET	& CONTRACTS	ACTUAL	BALANCE	PLAN	ACTUAL	OVER/UNDER	%
	_____									
	_____									
	CAPITAL LEASE PAYMENTS									
1,111	TRACTOR LEASE '11	8512	13,273		8,800	4,473	67%	66%	(73)	-1%
922	BACKHOE LEASE '11	8514	11,020		7,311	3,709	67%	66%	(53)	0%
---			---	---	---	---	---	---	---	---
2,032	**CAPITAL LEASE PAYMEN**		**24,293**		**16,111**	**8,182**	**67%**	**66%**	**(126)**	**-1%**
	INTEREST ON CAPITAL LEA									
302	TRACTOR LEASE '11	8612	3,676		2,499	1,177	67%	68%	72	2%
164	BACKHOE LEASE '11	8614	2,014		1,378	636	67%	68%	53	3%
---			---	---	---	---	---	---	---	---
466	**INTEREST ON CAPITAL**		**5,690**		**3,877**	**1,813**	**67%**	**68%**	**125**	**2%**
---			---	---	---	---	---	---	---	---
2,499	**DEBT SERVICE**		**29,983**		**19,988**	**9,995**	**67%**	**67%**	**(1)**	**0%**
---			---	---	---	---	---	---	---	---
2,499	**EXPENDITURES**		**29,983**		**19,988**	**9,995**	**67%**	**67%**	**(1)**	**0%**

			CITY OF HATTIESBURG							
	072500 - MUN.ROAD&BRIDGE-TRANSFERS		EXPENDITURE REPORT							
			8 Months Ending 05/31/13							
THIS MONTH			ANNUAL	OPEN PO	YTD	REMAINING	PERCENT		....PROJECTED....	
ACTUAL		OBJ/SUB	BUDGET	& CONTRACTS	ACTUAL	BALANCE	PLAN	ACTUAL	OVER/UNDER	%
	_____									
	_____									
	TRANSFERS TO OTHER FUND									
	T/T GENERAL FUND	9000 01								
	T/T SPECIAL STREET	9000 08								
	T/T COMMUNITY DEVELOPM	9000 82								
----------			---------	---------	---------	---------	-----	-----	--------	-----
	TRANSFERS TO OTHER F									
----------			---------	---------	---------	---------	-----	-----	--------	-----
	TRANSFERS									
----------			---------	---------	---------	---------	-----	-----	--------	-----
	EXPENDITURES									

			CITY OF HATTIESBURG							
	073570 - MASS TRANSIT-TRANSPORTATION		EXPENDITURE REPORT							
			8 Months Ending 05/31/13							
THIS MONTH			ANNUAL	OPEN PO	YTD	REMAINING	PERCENT		....PROJECTED....	
ACTUAL		OBJ/SUB	BUDGET	& CONTRACTS	ACTUAL	BALANCE	PLAN	ACTUAL	OVER/UNDER	%
	_____									
	_____									
	SALARIES									
38,589	REGULAR WAGES	4000	355,859		231,351	124,508	67%	65%	(8,832)	-2%
	DISASTER RECOVERY WAGE	4010			101	(101)			151	
4,545	OVERTIME	4300	50,000		25,646	24,354	67%	51%	(11,530)	-23%
	DISASTER RECOVERY OVER	4310								
----------			---------	---------	---------	---------	-----	-----	--------	-----
43,134	**SALARIES**		**405,859**		**257,099**	**148,760**	**67%**	**63%**	**(20,210)**	**-5%**
	EMPLOYEE BENEFITS									
6,151	STATE RETIREMENT	4600	57,880		36,679	21,201	67%	63%	(2,861)	-5%
3,206	F.I.C.A. TAXES	4700	31,065		18,919	12,146	67%	61%	(2,686)	-9%
9,392	HOSPITALIZATION INS.	4800	78,300		46,999	31,301	67%	60%	(7,801)	-10%
	UNEMPLOYMENT BENEFITS	4900	1,200		748	452	67%	62%	(78)	-7%
	WORKMAN'S COMPENSATION	4910	16,480			16,480	67%	0%	(16,480)	-100%
----------			---------	---------	---------	---------	-----	-----	--------	-----
18,749	**EMPLOYEE BENEFITS**		**184,925**		**103,344**	**81,581**	**67%**	**56%**	**(29,909)**	**-16%**
----------			---------	---------	---------	---------	-----	-----	--------	-----
61,883	**PERSONAL SERVICES**		**590,784**		**360,442**	**230,342**	**67%**	**61%**	**(50,120)**	**-8%**
	_____									
	OFFICE SUPPLIES									
	PAPER	5003								
	PRINTED FORMS	5005								
	OTHER EXPENDABLE OFF.S	5010	2,500		559	1,941	67%	22%	(1,661)	-66%
1,374	MINOR OFFICE EQUIP/FUR	5020	2,800		1,703	1,097	67%	61%	(245)	-9%
	SUBSCRIPTIONS,MAGS,MAP	5050								
	BOOKS	5070								
	COMPUTER SUPPLIES	5080	1,000			1,000	67%	0%	(1,000)	-100%
----------			---------	---------	---------	---------	-----	-----	--------	-----
1,374	**OFFICE SUPPLIES**		**6,300**		**2,262**	**4,038**	**67%**	**36%**	**(2,906)**	**-46%**
	OPERATING SUPPLIES									
	CLEANING/JANITORIAL SP	5100	1,800		1,594	206	67%	89%	591	33%
	FOOD	5115								
	MEDICAL SUPPLIES	5120	200			200	67%	0%	(200)	-100%
	CHEMICALS	5130	500		251	249	67%	50%	(123)	-25%
1,863	GAS AND OIL	5250	25,000		5,900	19,100	67%	24%	(16,150)	-65%
	LUBRICANTS	5255	500		380	120	67%	76%	70	14%

			CITY OF HATTIESBURG							
	073570 - MASS TRANSIT-TRANSPORTATION		EXPENDITURE REPORT							
			8 Months Ending 05/31/13							
THIS MONTH			ANNUAL	OPEN PO	YTD	REMAINING	PERCENT		....PROJECTED....	
ACTUAL		OBJ/SUB	BUDGET	& CONTRACTS	ACTUAL	BALANCE	PLAN	ACTUAL	OVER/UNDER	%
7,945	DIESEL FUEL	5257	130,000		75,881	54,119	67%	58%	(16,178)	-12%
	OTHER FUEL	5260								
	WEARING APPAREL	5355	1,500		368	1,133	67%	25%	(948)	-63%
	CONCRETE, CEMENT, ETC.	5405								
	SAND,CLAY,GRVL,FILL DI	5415								
	HAND TOOLS	5450	500			500	67%	0%	(500)	-100%
	MINOR EQUIPMENT	5460								
	OTHER OPERATING MATL/S	5590	2,000			2,000	67%	0%	(2,000)	-100%
---			---	---	---	---	---	---	---	---
9,808	**OPERATING SUPPLIES**		**162,000**		**84,374**	**77,626**	**67%**	**52%**	**(35,438)**	**-22%**
	REPAIR & MAINTENANCE SP									
160	BUILDING MATERIALS & S	5600	1,000		160	840	67%	16%	(760)	-76%
	ELECTRICAL SUPPLIES	5605	500		101	399	67%	20%	(348)	-70%
	PLUMBING SUPPLIES	5610	500			500	67%	0%	(500)	-100%
	PAINT AND PAINTING SPL	5650	300			300	67%	0%	(300)	-100%
149	MTR VEHICLE REP. PTS/S	5700	1,200		1,124	76	67%	94%	486	41%
	REPAIR PARTS - BUSES	5710			35,198	(35,198)			52,797	
2,476	REPAIR PARTS - FIXED R	5710 01	46,000	2,090	11,605	32,305	67%	25%	(28,592)	-62%
196	REPAIR PARTS - PARATRA	5710 02	4,000		3,156	844	67%	79%	734	18%
	COMMUNICATION REPAIR P	5750	500			500	67%	0%	(500)	-100%
	AGRICLTRL REPAIR PTS/S	5755								
391	OTHER REPAIR/MAINT. SP	5990	2,000		1,011	989	67%	51%	(483)	-24%
---			---	---	---	---	---	---	---	---
3,373	**REPAIR & MAINTENANCE**		**56,000**	**2,090**	**52,355**	**1,555**	**67%**	**93%**	**22,532**	**40%**
---			---	---	---	---	---	---	---	---
14,554	**SUPPLIES AND EXPENSES**		**224,300**	**2,090**	**138,991**	**83,219**	**67%**	**62%**	**(15,813)**	**-7%**
	_____									
	PROFESSIONAL SERVICES									
	AUDITING AND ACCOUNTIN	6010								
	CONSULTANT SERV/SURVEY	6020								
	BUILDING/BUS SECURITY	6021	4,000	470	240	3,290	67%	6%	(3,640)	-91%
	MEDICAL	6027								
570	OTHER PROFESSIONAL SER	6049	4,000		2,985	1,015	67%	75%	477	12%
---			---	---	---	---	---	---	---	---
570	**PROFESSIONAL SERVICE**		**8,000**	**470**	**3,225**	**4,305**	**67%**	**40%**	**(3,162)**	**-40%**
	COMMUNICATIONS									
57	TELEPHONE AND TELEGRAP	6060	1,000		500	500	67%	50%	(250)	-25%

			CITY OF HATTIESBURG							
	073570 - MASS TRANSIT-TRANSPORTATION		EXPENDITURE REPORT							
			8 Months Ending 05/31/13							
THIS MONTH			ANNUAL	OPEN PO	YTD	REMAINING	PERCENT		....PROJECTED....	
ACTUAL		OBJ/SUB	BUDGET	& CONTRACTS	ACTUAL	BALANCE	PLAN	ACTUAL	OVER/UNDER	%
	POSTAGE	6070	200			200	67%	0%	(200)	-100%
---			---	---	---	---	---	---	---	---
57	**COMMUNICATIONS**		**1,200**		**500**	**700**	**67%**	**42%**	**(450)**	**-38%**
	TRANSPORTATION									
627	TRAVEL EXPENSE	6110	7,000		3,583	3,417	67%	51%	(1,625)	-23%
	FREIGHT	6120	50			50	67%	0%	(50)	-100%
	MESSENGER/EXPRESS SERV	6130								
---			---	---	---	---	---	---	---	---
627	**TRANSPORTATION**		**7,050**		**3,583**	**3,467**	**67%**	**51%**	**(1,675)**	**-24%**
	ADVERTISING									
	ADVERTISING	6150	900			900	67%	0%	(900)	-100%
---			---	---	---	---	---	---	---	---
	ADVERTISING		**900**			**900**	**67%**	**0%**	**(900)**	**-100%**
	PRINTING AND BINDING									
	PRINTING	6200	100		38	63	67%	38%	(42)	-42%
---			---	---	---	---	---	---	---	---
	PRINTING AND BINDING		**100**		**38**	**63**	**67%**	**38%**	**(42)**	**-42%**
	INSURANCE									
	PUBLIC LIAB/PROPERTY D	6255	48,600		42,988	5,612	67%	88%	15,882	33%
	AUTOMOBILE INSURANCE	6265								
	SURETY AND FORGERY BON	6270								
---			---	---	---	---	---	---	---	---
	INSURANCE		**48,600**		**42,988**	**5,612**	**67%**	**88%**	**15,882**	**33%**
	UTILITIES									
969	ELECTRICITY	6305	13,000		9,018	3,982	67%	69%	527	4%
---			---	---	---	---	---	---	---	---
969	**UTILITIES**		**13,000**		**9,018**	**3,982**	**67%**	**69%**	**527**	**4%**
	REPR/MAINT-OUTSIDE LABO									
	BUILDING R&M	6350	4,000			4,000	67%	0%	(4,000)	-100%
	ELECTRICAL R&M	6355								
	PLUMBING EQUIPMENT R&M	6357								
	OFFICE EQUIPMENT R&M	6365	500			500	67%	0%	(500)	-100%
	FIXED EQUIPMENT R&M	6380								
	MINOR EQUIPMENT R&M	6382								
	MOTOR VEHICLE EQ. R&M	6384	500		398	102	67%	80%	97	19%
	BUS EQUIPMENT R&M	6385			18,439	(18,439)			27,658	
4,584	BUS EQUIP R&M-FIXED RO	6385 01	61,600	404	12,119	49,076	67%	20%	(43,421)	-70%

			CITY OF HATTIESBURG							
	073570 - MASS TRANSIT-TRANSPORTATION		EXPENDITURE REPORT							
			8 Months Ending 05/31/13							
THIS MONTH			ANNUAL	OPEN PO	YTD	REMAINING	PERCENT		....PROJECTED....	
ACTUAL		OBJ/SUB	BUDGET	& CONTRACTS	ACTUAL	BALANCE	PLAN	ACTUAL	OVER/UNDER	%
	BUS EQUIP R&M-PARATRAN	6385 02	10,000	349	688	8,964	67%	7%	(8,968)	-90%
	COMMUNICATION EQ. R&M	6390	2,000			2,000	67%	0%	(2,000)	-100%
54	DISINFECT./EXTERMINATI	6394	200		162	38	67%	81%	43	22%
	SIGN PAINTING	6396	300			300	67%	0%	(300)	-100%
	TOW IN CHARGES	6398	1,000		700	300	67%	70%	50	5%
	OTHER REPAIRS AND MAIN	6399								
---			---	---	---	---	---	---	---	---
4,638	**REPR/MAINT-OUTSIDE L**		**80,100**	**753**	**32,506**	**46,841**	**67%**	**41%**	**(31,340)**	**-39%**
	RENTALS									
	CYLINDER RENT	6425	200		182	18	67%	91%	73	37%
220	UNIFORM RENT	6430	4,000		1,515	2,485	67%	38%	(1,727)	-43%
59	OTHER RENT	6449	500		252	248	67%	50%	(122)	-24%
---			---	---	---	---	---	---	---	---
279	**RENTALS**		**4,700**		**1,950**	**2,750**	**67%**	**41%**	**(1,774)**	**-38%**
	OTHER SERVICES & CHARGE									
76	PROP.TAX COLL. FEES .0	6830	800		534	266	67%	67%	1	0%
18	PROP.TAX COLL. FEES.00	6831	950		840	110	67%	88%	310	33%
	DUES AND MEMBERSHIPS	6840	500		300	200	67%	60%	(50)	-10%
	REGISTRATION FEE/TUITI	6845	1,000			1,000	67%	0%	(1,000)	-100%
	LAUNDRY	6850								
	ARRA-OPERATIONS	6869								
	SERVICES NOT SPECIFIED	6999	3,000			3,000	67%	0%	(3,000)	-100%
---			---	---	---	---	---	---	---	---
94	**OTHER SERVICES & CHA**		**6,250**		**1,674**	**4,576**	**67%**	**27%**	**(3,738)**	**-60%**
---			---	---	---	---	---	---	---	---
7,234	**OTHER SERVICES & CHAR**		**169,900**	**1,223**	**95,481**	**73,196**	**67%**	**56%**	**(26,678)**	**-16%**
	_____									
	BUILDING/BLD IMPROVEMEN									
	BUILDINGS	7100								
	BUS SHELTERS	7100 24	32,000			32,000	67%	0%	(32,000)	-100%
---			---	---	---	---	---	---	---	---
	BUILDINGS		**32,000**			**32,000**	**67%**	**0%**	**(32,000)**	**-100%**
---			---	---	---	---	---	---	---	---
	BUILDING/BLD IMPROVE		**32,000**			**32,000**	**67%**	**0%**	**(32,000)**	**-100%**
	IMPROVEMENT OTHER THAN									
	OTHER IMPROVEMENTS	7295								
	ARRA DEPOT INFO KIOSK	7295 53	104,000		29,500	74,500	67%	28%	(59,750)	-57%

			CITY OF HATTIESBURG							
	073570 - MASS TRANSIT-TRANSPORTATION		EXPENDITURE REPORT							
			8 Months Ending 05/31/13							
THIS MONTH			ANNUAL	OPEN PO	YTD	REMAINING	PERCENT		....PROJECTED....	
ACTUAL		OBJ/SUB	BUDGET	& CONTRACTS	ACTUAL	BALANCE	PLAN	ACTUAL	OVER/UNDER	%
	ARRA IMPROVEMENTS	7295 99	234,016		17,807	216,209	67%	8%	(207,305)	-89%
---			---	---	---	---	---	---	---	---
	OTHER IMPROVEMENTS		**338,016**		**47,307**	**290,709**	**67%**	**14%**	**(267,055)**	**-79%**
---			---	---	---	---	---	---	---	---
	IMPROVEMENT OTHER TH		**338,016**		**47,307**	**290,709**	**67%**	**14%**	**(267,055)**	**-79%**
	MACHINERY AND EQUIPMENT									
	OFFICE FURN/EQUIP.	7325								
	DATA PROCESSING EQUIP.	7327								
202	ARRA-DP EQUIP/SOFTWARE	7328	11,607		10,287	1,320	67%	89%	3,823	33%
	AGRICULTURAL EQUIPMENT	7335								
	COMMUNICATION EQUIPMEN	7355								
34,450	ARRA-COMMUNICATION EQU	7356	35,000		34,450	550	67%	98%	16,675	48%
	ARRA-GPS EQUIPMENT	7357	5,350			5,350	67%	0%	(5,350)	-100%
	MAJOR EQUIP. IMPROVEME	7390								
	OTHER EQUIPMENT	7399								
---			---	---	---	---	---	---	---	---
34,652	**MACHINERY AND EQUIPM**		**51,957**		**44,737**	**7,220**	**67%**	**86%**	**15,148**	**29%**
	VEHICLES									
	AUTOMOBILES	7400	24,000	17,542		6,458	67%	0%	(24,000)	-100%
	BUSES	7410	574,655		36,119	538,536	67%	6%	(520,476)	-91%
	ARRA-TROLLEYS	7415								
	SPECIAL TRUCKS	7450								
---			---	---	---	---	---	---	---	---
	VEHICLES		**598,655**	**17,542**	**36,119**	**544,994**	**67%**	**6%**	**(544,476)**	**-91%**
---			---	---	---	---	---	---	---	---
34,652	**CAPITAL OUTLAY**		**1,020,628**	**17,542**	**128,163**	**874,923**	**67%**	**13%**	**(828,383)**	**-81%**
---			---	---	---	---	---	---	---	---
118,323	**EXPENDITURES**		**2,005,612**	**20,855**	**723,078**	**1,261,679**	**67%**	**36%**	**(920,994)**	**-46%**

			CITY OF HATTIESBURG							
	075695 - W&S CONSTR.-CAPITAL PROJECTS		EXPENDITURE REPORT							
			8 Months Ending 05/31/13							
THIS MONTH			ANNUAL	OPEN PO	YTD	REMAINING	PERCENT		....PROJECTED....	
ACTUAL		OBJ/SUB	BUDGET	& CONTRACTS	ACTUAL	BALANCE	PLAN	ACTUAL	OVER/UNDER	%
	_____									
	_____									
	OPERATING SUPPLIES									
	ASPHALT & ASPHALT PROD	5400								
---			---	---	---	---	---	---	---	---
	OPERATING SUPPLIES									
---			---	---	---	---	---	---	---	---
	SUPPLIES AND EXPENSES									
	_____									
	PROFESSIONAL SERVICES									
42,696	ENGINEERING	6015	1,000,000		303,510	696,490	67%	30%	(544,734)	-54%
	LEGAL	6025								
	OTHER PROFESSIONAL SER	6049	50,000			50,000	67%	0%	(50,000)	-100%
---			---	---	---	---	---	---	---	---
42,696	**PROFESSIONAL SERVICE**		**1,050,000**		**303,510**	**746,490**	**67%**	**29%**	**(594,734)**	**-57%**
	REPR/MAINT-OUTSIDE LABO									
	STREETS & STRUCTURES R	6360								
---			---	---	---	---	---	---	---	---
	REPR/MAINT-OUTSIDE L									
	OTHER SERVICES & CHARGE									
	SERVICES NOT SPECIFIED	6999								
---			---	---	---	---	---	---	---	---
	OTHER SERVICES & CHA									
---			---	---	---	---	---	---	---	---
42,696	**OTHER SERVICES & CHAR**		**1,050,000**		**303,510**	**746,490**	**67%**	**29%**	**(594,734)**	**-57%**
	_____									
	LAND									
	LAND	7000								
	EASEMENTS	7010								
---			---	---	---	---	---	---	---	---
	LAND									
	IMPROVEMENT OTHER THAN									
	FENCES/RAILINGS	7212								
	SEWERS	7220								
	IRENE CHAPEL-HATTIE A	7220 02								
	IND.PARK WTR/SWR IMPR	7220 03	143,750			143,750	67%	0%	(143,750)	-100%
	MISC.SEWER SYSTEMS IM	7220 04								

			CITY OF HATTIESBURG							
	075695 - W&S CONSTR.-CAPITAL PROJECTS		EXPENDITURE REPORT							
			8 Months Ending 05/31/13							
THIS MONTH			ANNUAL	OPEN PO	YTD	REMAINING	PERCENT		....PROJECTED....	
ACTUAL		OBJ/SUB	BUDGET	& CONTRACTS	ACTUAL	BALANCE	PLAN	ACTUAL	OVER/UNDER	%
	SHADOWOOD	7220 05								
	WOODHAVEN	7220 06								
	RICHBURG HILL TO I/59	7220 07								
	HWY 49 S	7220 08								
	W.HILLS GOLF CRSE SWR	7220 09								
	PCS WTR/SWR LINES	7220 10								
1,146,800	S.LAGOON IMPROVEMENTS	7220 11	5,256,000	23,814	5,232,121	65	67%	100%	2,592,181	49%
	COUNTRY CLUB SEWER	7220 13								
	HYBRID PLASTICS PROJ(	7220 14								
	PALMER'S SWR-SRF-LOAN	7220 15								
	CENTRAL SCHL RD	7220 16								
	JAMES/HWY49 SRF LOAN#	7220 18								
	I-59/JERVIS MIMS	7220 19								
	DIXIE PINE-SRF LOAN #	7220 20								
	USM PUMP STATION	7220 21								
	N.LAGOON EXPANSION	7220 26								
	S.LAGOON REPAIRS	7220 27								
	HWY 11 SOUTH SEWER	7220 29								
	USA YEAST	7220 37								
	S2-W 592 SWR W OF RAI	7220 38								
	S3-E 592 SWR E OF RAI	7220 39								
1,112	CDBG-WIS PAK	7220 46	37,090		2,379	34,711	67%	6%	(33,521)	-90%
	LAGOON AERATORS-ARRA	7220 47								
	RAILROAD BORE	7220 48								
4,902	CDBG-USA YEAST	7220 51	7,431,200		2,521,443	4,909,757	67%	34%	(3,649,035)	-49%
	PROGRAMMED SEWER PROJ	7220 99	576,000		4,252	571,748	67%	1%	(569,622)	-99%
----------			---------	---------	---------	---------	-----	-----	--------	-----
1,152,814	**SEWERS**		**13,444,040**	**23,814**	**7,760,195**	**5,660,031**	**67%**	**58%**	**(1,803,747)**	**-13%**
	STREETS & ROADWAYS	7230								
	1995 W&S-PAVING	7230 01								
----------			---------	---------	---------	---------	-----	-----	--------	-----
	STREETS & ROADWAYS									
	WATER SYSTEMS	7245								
105,040	JAMES ST WTR PLT	7245 02	180,222		180,220	2	67%	100%	90,108	50%
	HWY 98 WEST WTR.IMPR.	7245 03								
	WESTERN CONTAINER FIR	7245 06								
	RICHBURG HILL TO I/59	7245 07								

			CITY OF HATTIESBURG							
	075695 - W&S CONSTR.-CAPITAL PROJECTS		EXPENDITURE REPORT							
			8 Months Ending 05/31/13							
THIS MONTH			ANNUAL	OPEN PO	YTD	REMAINING	PERCENT		....PROJECTED....	
ACTUAL		OBJ/SUB	BUDGET	& CONTRACTS	ACTUAL	BALANCE	PLAN	ACTUAL	OVER/UNDER	%
	RICHBURG HILL WTR.LIN	7245 14								
	RICHBURG HILL BOOSTER	7245 17								
	COUNTRY CLUB WATER	7245 18								
	RICHBURG ELEVATED TAN	7245 19								
	RAULSTON RD WATER	7245 20								
	BLC MUN.AIRPORT	7245 21								
	JMT IND.DR/JAMES ST	7245 22								
	TATUM BLVD/HWY 11	7245 23								
	CDBG-WIS PAK	7245 46								
	PROGRAMMED WATER PROJ	7245 99	193,200		3,740	189,460	67%	2%	(187,590)	-97%
---			---	---	---	---	---	---	---	---
105,040	**WATER SYSTEMS**		**373,422**		**183,960**	**189,462**	**67%**	**49%**	**(97,482)**	**-26%**
	OTHER IMPROVEMENTS	7295								
	SCS PROJECT MATCH	7295 20								
	NRCS EROSION CONTROL	7295 21								
	TURTLECREEK-STORM DRA	7295 26								
	TURTLECREEK-WATER/SEW	7295 27								
	TANK PAINTING/MAINT	7295 98	150,000		113,836	36,164	67%	76%	20,754	14%
---			---	---	---	---	---	---	---	---
	OTHER IMPROVEMENTS		**150,000**		**113,836**	**36,164**	**67%**	**76%**	**20,754**	**14%**
---			---	---	---	---	---	---	---	---
1,257,854	**IMPROVEMENT OTHER TH**		**13,967,462**	**23,814**	**8,057,991**	**5,885,657**	**67%**	**58%**	**(1,880,475)**	**-13%**
	MACHINERY AND EQUIPMENT									
	OFFICE FURN/EQUIP.	7325								
	PIPE	7370								
	OTHER EQUIPMENT	7399								
---			---	---	---	---	---	---	---	---
	MACHINERY AND EQUIPM									
---			---	---	---	---	---	---	---	---
1,257,854	**CAPITAL OUTLAY**		**13,967,462**	**23,814**	**8,057,991**	**5,885,657**	**67%**	**58%**	**(1,880,475)**	**-13%**
---			---	---	---	---	---	---	---	---
1,300,550	**EXPENDITURES**		**15,017,462**	**23,814**	**8,361,501**	**6,632,147**	**67%**	**56%**	**(2,475,210)**	**-16%**

			CITY OF HATTIESBURG							
	077650 - COMMUNITY CTR-ADMIN/GENERAL		EXPENDITURE REPORT							
			8 Months Ending 05/31/13							
THIS MONTH			ANNUAL	OPEN PO	YTD	REMAINING	PERCENT		....PROJECTED....	
ACTUAL		OBJ/SUB	BUDGET	& CONTRACTS	ACTUAL	BALANCE	PLAN	ACTUAL	OVER/UNDER	%
	_____									
	_____									
	SALARIES									
36,061	REGULAR WAGES	4000	328,189		216,329	111,860	67%	66%	(3,695)	-1%
	DISASTER RECOVERY WAGE	4010			168	(168)			252	
592	OVERTIME	4300	15,000		9,724	5,276	67%	65%	(414)	-3%
	DISASTER RECOVERY OVER	4310								
---			---	---	---	---	---	---	---	---
36,652	**SALARIES**		**343,189**		**226,222**	**116,967**	**67%**	**66%**	**(3,855)**	**-1%**
	EMPLOYEE BENEFITS									
5,227	STATE RETIREMENT	4600	48,945		32,259	16,686	67%	66%	(556)	-1%
2,775	F.I.C.A. TAXES	4700	26,255		17,050	9,205	67%	65%	(679)	-3%
9,128	HOSPITALIZATION INS.	4800	73,080		46,764	26,316	67%	64%	(2,934)	-4%
	UNEMPLOYMENT BENEFITS	4900	3,000			3,000	67%	0%	(3,000)	-100%
	WORKMAN'S COMPENSATION	4910	11,845			11,845	67%	0%	(11,845)	-100%
---			---	---	---	---	---	---	---	---
17,130	**EMPLOYEE BENEFITS**		**163,125**		**96,073**	**67,052**	**67%**	**59%**	**(19,015)**	**-12%**
---			---	---	---	---	---	---	---	---
53,782	**PERSONAL SERVICES**		**506,314**		**322,295**	**184,019**	**67%**	**64%**	**(22,871)**	**-5%**
	_____									
	OFFICE SUPPLIES									
	PAPER	5003								
	PRINTED FORMS	5005								
	OTHER EXPENDABLE OFF.S	5010	1,000		532	468	67%	53%	(202)	-20%
	MINOR OFFICE EQUIP/FUR	5020	1,000			1,000	67%	0%	(1,000)	-100%
	PHOTO SUPPLIES	5040								
	SUBSCRIPTIONS,MAGS,MAP	5050								
	BOOKS	5070								
---			---	---	---	---	---	---	---	---
	OFFICE SUPPLIES		**2,000**		**532**	**1,468**	**67%**	**27%**	**(1,202)**	**-60%**
	OPERATING SUPPLIES									
1,380	CLEANING/JANITORIAL SP	5100	13,000		7,154	5,846	67%	55%	(2,268)	-17%
	HOUSEHOLD SUPPLIES	5110								
	FOOD	5115								
	MEDICAL SUPPLIES	5120	250			250	67%	0%	(250)	-100%
	CHEMICALS	5130								
446	GAS AND OIL	5250	11,200		4,751	6,449	67%	42%	(4,073)	-36%

			CITY OF HATTIESBURG							
	077650 - COMMUNITY CTR-ADMIN/GENERAL		EXPENDITURE REPORT							
			8 Months Ending 05/31/13							
THIS MONTH			ANNUAL	OPEN PO	YTD	REMAINING	PERCENT		....PROJECTED....	
ACTUAL		OBJ/SUB	BUDGET	& CONTRACTS	ACTUAL	BALANCE	PLAN	ACTUAL	OVER/UNDER	%
	WEARING APPAREL	5355	500			500	67%	0%	(500)	-100%
1,000	HORT./LANDSCAPING SPLY	5440	2,750		2,720	30	67%	99%	1,330	48%
	HAND TOOLS	5450								
550	MINOR EQUIPMENT	5460	19,000	300	1,666	17,034	67%	9%	(16,500)	-87%
	MDSE FOR RESALE	5520								
13	OTHER OPERATING MATL/S	5590	1,500		288	1,212	67%	19%	(1,068)	-71%
---			---	---	---	---	---	---	---	---
3,389	**OPERATING SUPPLIES**		**48,200**	**300**	**16,580**	**31,320**	**67%**	**34%**	**(23,330)**	**-48%**
	REPAIR & MAINTENANCE SP									
	BUILDING MATERIALS & S	5600	3,000		233	2,767	67%	8%	(2,650)	-88%
147	ELECTRICAL SUPPLIES	5605	5,000		3,084	1,916	67%	62%	(374)	-7%
	PLUMBING SUPPLIES	5610	3,000	1,030	72	1,899	67%	2%	(2,892)	-96%
692	PAINT AND PAINTING SPL	5650	3,000		692	2,308	67%	23%	(1,962)	-65%
104	MTR VEHICLE REP. PTS/S	5700	2,000		755	1,245	67%	38%	(867)	-43%
	OTHER REPAIR/MAINT. SP	5990	1,700		685	1,015	67%	40%	(672)	-40%
---			---	---	---	---	---	---	---	---
942	**REPAIR & MAINTENANCE**		**17,700**	**1,030**	**5,520**	**11,151**	**67%**	**31%**	**(9,420)**	**-53%**
---			---	---	---	---	---	---	---	---
4,331	**SUPPLIES AND EXPENSES**		**67,900**	**1,330**	**22,631**	**43,939**	**67%**	**33%**	**(33,953)**	**-50%**
	PROFESSIONAL SERVICES									
	ENTERTAINMENT	6033								
224	OTHER PROFESSIONAL SER	6049	10,400		9,282	1,118	67%	89%	3,523	34%
---			---	---	---	---	---	---	---	---
224	**PROFESSIONAL SERVICE**		**10,400**		**9,282**	**1,118**	**67%**	**89%**	**3,523**	**34%**
	COMMUNICATIONS									
50	TELEPHONE AND TELEGRAP	6060	1,500		398	1,103	67%	27%	(902)	-60%
	POSTAGE	6070								
---			---	---	---	---	---	---	---	---
50	**COMMUNICATIONS**		**1,500**		**398**	**1,103**	**67%**	**27%**	**(902)**	**-60%**
	TRANSPORTATION									
	TRAVEL EXPENSE	6110	500			500	67%	0%	(500)	-100%
	FREIGHT	6120	100			100	67%	0%	(100)	-100%
---			---	---	---	---	---	---	---	---
	TRANSPORTATION		**600**			**600**	**67%**	**0%**	**(600)**	**-100%**
	ADVERTISING									
	ADVERTISING	6150								

			CITY OF HATTIESBURG							
	077650 - COMMUNITY CTR-ADMIN/GENERAL		EXPENDITURE REPORT							
			8 Months Ending 05/31/13							
THIS MONTH			ANNUAL	OPEN PO	YTD	REMAINING	PERCENT		....PROJECTED....	
ACTUAL		OBJ/SUB	BUDGET	& CONTRACTS	ACTUAL	BALANCE	PLAN	ACTUAL	OVER/UNDER	%
----------			---------	---------	---------	---------	-----	-----	--------	-----
	ADVERTISING									
	PRINTING AND BINDING									
	PRINTING	6200								
	FILM PROCESSING	6240								
----------			---------	---------	---------	---------	-----	-----	--------	-----
	PRINTING AND BINDING									
	INSURANCE									
	BOILER MACHINERY	6260								
	AUTOMOBILE INSURANCE	6265								
----------			---------	---------	---------	---------	-----	-----	--------	-----
	INSURANCE									
	UTILITIES									
398	GAS	6300	25,000		8,406	16,594	67%	34%	(12,390)	-50%
4,966	ELECTRICITY	6305	84,000		38,151	45,849	67%	45%	(26,773)	-32%
----------			---------	---------	---------	---------	-----	-----	--------	-----
5,364	**UTILITIES**		**109,000**		**46,557**	**62,443**	**67%**	**43%**	**(39,164)**	**-36%**
	REPR/MAINT-OUTSIDE LABO									
96,475	BUILDING R&M	6350	407,800	68,672	328,090	11,038	67%	80%	84,335	21%
	ELECTRICAL R&M	6355	500		275	225	67%	55%	(87)	-17%
	PLUMBING EQUIPMENT R&M	6357	2,000		485	1,515	67%	24%	(1,272)	-64%
	OFFICE EQUIPMENT R&M	6365								
	HOUSEHOLD EQUIPMENT R&	6370	5,000	200	1,630	3,170	67%	33%	(2,554)	-51%
851	FIXED EQUIPMENT R&M	6380	23,700		21,873	1,827	67%	92%	9,109	38%
	MINOR EQUIPMENT R&M	6382	600			600	67%	0%	(600)	-100%
	MOTOR VEHICLE EQ. R&M	6384	3,000			3,000	67%	0%	(3,000)	-100%
4,895	CLEANING AND PAINTING	6392	16,000		7,643	8,357	67%	48%	(4,535)	-28%
402	DISINFECT./EXTERMINATI	6394	3,500		1,326	2,174	67%	38%	(1,510)	-43%
	TOW IN CHARGES	6398	250		150	100	67%	60%	(24)	-10%
(1,701)	OTHER REPAIRS AND MAIN	6399	4,000		1,607	2,393	67%	40%	(1,589)	-40%
----------			---------	---------	---------	---------	-----	-----	--------	-----
100,922	**REPR/MAINT-OUTSIDE L**		**466,350**	**68,872**	**363,079**	**34,399**	**67%**	**78%**	**78,268**	**17%**
	RENTALS									
	OFFICE EQUIPMENT RENT	6410								
	CYLINDER RENT	6425								
226	UNIFORM RENT	6430	3,000		1,701	1,299	67%	57%	(448)	-15%
	MOP-MAT-RAG RENT	6435								

			CITY OF HATTIESBURG							
	077650 - COMMUNITY CTR-ADMIN/GENERAL		EXPENDITURE REPORT							
			8 Months Ending 05/31/13							
THIS MONTH			ANNUAL	OPEN PO	YTD	REMAINING	PERCENT		....PROJECTED....	
ACTUAL		OBJ/SUB	BUDGET	& CONTRACTS	ACTUAL	BALANCE	PLAN	ACTUAL	OVER/UNDER	%
100	OTHER RENT	6449	2,500	1,730	383	387	67%	15%	(1,925)	-77%
---			---	---	---	---	---	---	---	---
326	**RENTALS**		**5,500**	**1,730**	**2,084**	**1,686**	**67%**	**38%**	**(2,374)**	**-43%**
	OTHER SERVICES & CHARGE									
	DUES AND MEMBERSHIPS	6840								
	REGISTRATION FEE/TUITI	6845	1,000			1,000	67%	0%	(1,000)	-100%
	PAYMENTS-TOURING EVENT	6997								
	SPECIAL EVENTS EXPENDI	6998								
	SERVICES NOT SPECIFIED	6999	4,000		2,150	1,850	67%	54%	(774)	-19%
---			---	---	---	---	---	---	---	---
	OTHER SERVICES & CHA		**5,000**		**2,150**	**2,850**	**67%**	**43%**	**(1,774)**	**-35%**
---			---	---	---	---	---	---	---	---
106,886	**OTHER SERVICES & CHAR**		**598,350**	**70,602**	**423,549**	**104,199**	**67%**	**71%**	**36,973**	**6%**
	_____									
	BUILDING/BLD IMPROVEMEN									
	BUILDING IMPROVEMENTS	7150								
	REC.CENTER (OLD YMCA)	7150 10								
	CULTURAL CTR	7150 14								
33,345	JDS COMM CTR	7150 19	133,000	4,581	83,519	44,900	67%	63%	(7,721)	-6%
	SIGLER CENTER	7150 20								
	CE ROY/5TH ST	7150 21								
---			---	---	---	---	---	---	---	---
33,345	**BUILDING IMPROVEMEN**		**133,000**	**4,581**	**83,519**	**44,900**	**67%**	**63%**	**(7,721)**	**-6%**
---			---	---	---	---	---	---	---	---
33,345	**BUILDING/BLD IMPROVE**		**133,000**	**4,581**	**83,519**	**44,900**	**67%**	**63%**	**(7,721)**	**-6%**
	IMPROVEMENT OTHER THAN									
	OTHER IMPROVEMENTS	7295								
---			---	---	---	---	---	---	---	---
	IMPROVEMENT OTHER TH									
	MACHINERY AND EQUIPMENT									
	HOUSEHOLD FURN/EQUIP.	7320								
	OFFICE FURN/EQUIP.	7325								
	COMMUNICATION EQUIPMEN	7355								
	OTHER EQUIPMENT	7399								
---			---	---	---	---	---	---	---	---
	MACHINERY AND EQUIPM									
	VEHICLES									

			CITY OF HATTIESBURG							
	077650 - COMMUNITY CTR-ADMIN/GENERAL		EXPENDITURE REPORT							
			8 Months Ending 05/31/13							
THIS MONTH			ANNUAL	OPEN PO	YTD	REMAINING	PERCENT		....PROJECTED....	
ACTUAL		OBJ/SUB	BUDGET	& CONTRACTS	ACTUAL	BALANCE	PLAN	ACTUAL	OVER/UNDER	%
	AUTOMOBILES	7400	22,000		20,100	1,900	67%	91%	8,150	37%
	PICK UP TRUCKS	7420								
---			---	---	---	---	---	---	---	---
	VEHICLES		**22,000**		**20,100**	**1,900**	**67%**	**91%**	**8,150**	**37%**
---			---	---	---	---	---	---	---	---
33,345	**CAPITAL OUTLAY**		**155,000**	**4,581**	**103,619**	**46,800**	**67%**	**67%**	**428**	**0%**
---			---	---	---	---	---	---	---	---
198,344	**EXPENDITURES**		**1,327,564**	**76,513**	**872,094**	**378,957**	**67%**	**66%**	**(19,422)**	**-1%**

			CITY OF HATTIESBURG							
	078635 - '09 WATER METER PROJ-CIP		EXPENDITURE REPORT							
			8 Months Ending 05/31/13							
THIS MONTH			ANNUAL	OPEN PO	YTD	REMAINING	PERCENT		....PROJECTED....	
ACTUAL		OBJ/SUB	BUDGET	& CONTRACTS	ACTUAL	BALANCE	PLAN	ACTUAL	OVER/UNDER	%
	_____									
	_____									
	OPERATING SUPPLIES									
	ASPHALT & ASPHALT PROD	5400								
	CONCRETE, CEMENT, ETC.	5405								
	BRICK,STONE,MORTAR,ETC	5410								
	DRAINAGE PIPE & CULVER	5420								
	OTHER OPERATING MATL/S	5590								
----------			---------	---------	---------	---------	-----	-----	--------	-----
	OPERATING SUPPLIES									
----------			---------	---------	---------	---------	-----	-----	--------	-----
	SUPPLIES AND EXPENSES									
	_____									
	PROFESSIONAL SERVICES									
	ENGINEERING	6015								
	CONSULTANT SERV/SURVEY	6020								
	LEGAL	6025								
	OTHER PROFESSIONAL SER	6049	38,150	27,650	10,500		67%	28%	(22,400)	-59%
----------			---------	---------	---------	---------	-----	-----	--------	-----
	PROFESSIONAL SERVICE		**38,150**	**27,650**	**10,500**		**67%**	**28%**	**(22,400)**	**-59%**
----------			---------	---------	---------	---------	-----	-----	--------	-----
	OTHER SERVICES & CHAR		**38,150**	**27,650**	**10,500**		**67%**	**28%**	**(22,400)**	**-59%**
	_____									
	BUILDING/BLD IMPROVEMEN									
	BUILDING IMPROVEMENTS	7150								
	FUTURE PROJECT	7150 18								
----------			---------	---------	---------	---------	-----	-----	--------	-----
	BUILDING IMPROVEMEN									
----------			---------	---------	---------	---------	-----	-----	--------	-----
	BUILDING/BLD IMPROVE									
	MACHINERY AND EQUIPMENT									
	WATER UTILITY SOFTWARE	7329								
	HYDRANTS & METERS	7365	11,568		5,395	6,173	67%	47%	(3,475)	-30%
----------			---------	---------	---------	---------	-----	-----	--------	-----
	MACHINERY AND EQUIPM		**11,568**		**5,395**	**6,173**	**67%**	**47%**	**(3,475)**	**-30%**
----------			---------	---------	---------	---------	-----	-----	--------	-----
	CAPITAL OUTLAY		**11,568**		**5,395**	**6,173**	**67%**	**47%**	**(3,475)**	**-30%**

			CITY OF HATTIESBURG							
	078635 - '09 WATER METER PROJ-CIP		EXPENDITURE REPORT							
			8 Months Ending 05/31/13							
THIS MONTH			ANNUAL	OPEN PO	YTD	REMAINING	PERCENT		....PROJECTED....	
ACTUAL		OBJ/SUB	BUDGET	& CONTRACTS	ACTUAL	BALANCE	PLAN	ACTUAL	OVER/UNDER	%
----------			---------	---------	---------	---------	-----	-----	--------	-----
	EXPENDITURES		**49,718**	**27,650**	**15,895**	**6,173**	**67%**	**32%**	**(25,875)**	**-52%**

			CITY OF HATTIESBURG							
	082285 - CDBG-ENTITLEMENTS		EXPENDITURE REPORT							
			8 Months Ending 05/31/13							
THIS MONTH			ANNUAL	OPEN PO	YTD	REMAINING	PERCENT		....PROJECTED....	
ACTUAL		OBJ/SUB	BUDGET	& CONTRACTS	ACTUAL	BALANCE	PLAN	ACTUAL	OVER/UNDER	%
	_____									
	_____									
	SALARIES									
17,265	REGULAR WAGES	4000	165,048		95,779	69,269	67%	58%	(21,379)	-13%
	OVERTIME	4300								
---			---	---	---	---	---	---	---	---
17,265	**SALARIES**		**165,048**		**95,779**	**69,269**	**67%**	**58%**	**(21,379)**	**-13%**
	EMPLOYEE BENEFITS									
2,462	STATE RETIREMENT	4600	23,545		13,658	9,887	67%	58%	(3,057)	-13%
1,300	F.I.C.A. TAXES	4700	12,630		7,192	5,438	67%	57%	(1,842)	-15%
2,841	HOSPITALIZATION INS.	4800	26,100		14,526	11,574	67%	56%	(4,310)	-17%
	UNEMPLOYMENT BENEFITS	4900								
	WORKMAN'S COMPENSATION	4910	2,266			2,266	67%	0%	(2,266)	-100%
---			---	---	---	---	---	---	---	---
6,603	**EMPLOYEE BENEFITS**		**64,541**		**35,376**	**29,165**	**67%**	**55%**	**(11,477)**	**-18%**
---			---	---	---	---	---	---	---	---
23,868	**PERSONAL SERVICES**		**229,589**		**131,155**	**98,434**	**67%**	**57%**	**(32,856)**	**-14%**
	_____									
	OFFICE SUPPLIES									
	PAPER	5003	700			700	67%	0%	(700)	-100%
	PRINTED FORMS	5005								
354	OTHER EXPENDABLE OFF.S	5010	1,480		1,134	346	67%	77%	221	15%
	MINOR OFFICE EQUIP/FUR	5020	520		480	40	67%	92%	200	38%
	PHOTO SUPPLIES	5040								
	SUBSCRIPTIONS,MAGS,MAP	5050								
	BOOKS	5070								
	COMPUTER SUPPLIES	5080								
---			---	---	---	---	---	---	---	---
354	**OFFICE SUPPLIES**		**2,700**		**1,614**	**1,086**	**67%**	**60%**	**(278)**	**-10%**
	OPERATING SUPPLIES									
	FOOD	5115								
123	GAS AND OIL	5250	2,500		1,493	1,007	67%	60%	(260)	-10%
	LUBRICANTS	5255								
	MINOR EQUIPMENT	5460	1,700		833	867	67%	49%	(450)	-26%
	OTHER OPERATING MATL/S	5590	300		8	293	67%	3%	(288)	-96%
	OTHER OPER.MATLS-FULL	5591								
	OTHER OPER.MATLS-EMER	5592								

			CITY OF HATTIESBURG							
	082285 - CDBG-ENTITLEMENTS		EXPENDITURE REPORT							
			8 Months Ending 05/31/13							
THIS MONTH			ANNUAL	OPEN PO	YTD	REMAINING	PERCENT		....PROJECTED....	
ACTUAL		OBJ/SUB	BUDGET	& CONTRACTS	ACTUAL	BALANCE	PLAN	ACTUAL	OVER/UNDER	%
---			---	---	---	---	---	---	---	---
123	**OPERATING SUPPLIES**		**4,500**		**2,334**	**2,166**	**67%**	**52%**	**(998)**	**-22%**
	REPAIR & MAINTENANCE SP									
	BUILDING MATERIALS & S	5600								
	PAINT AND PAINTING SPL	5650								
	MTR VEHICLE REP. PTS/S	5700	700		17	683	67%	2%	(674)	-96%
	MINOR COMPUTER EQUIP.	5800								
---			---	---	---	---	---	---	---	---
	REPAIR & MAINTENANCE		**700**		**17**	**683**	**67%**	**2%**	**(674)**	**-96%**
---			---	---	---	---	---	---	---	---
477	**SUPPLIES AND EXPENSES**		**7,900**		**3,964**	**3,936**	**67%**	**50%**	**(1,954)**	**-25%**
	_____									
	PROFESSIONAL SERVICES									
	AUDITING AND ACCOUNTIN	6010								
	DEMO/RELATED SER 2008-	6013								
	DEMOLITION-TARGET ARE	6013 01	69,236			69,236	67%	0%	(69,236)	-100%
	ASBESTOS REMOVAL-TARG	6013 02								
	LOT CLEARING-TARGET A	6013 03								
---			---	---	---	---	---	---	---	---
	DEMO/RELATED SER 20		**69,236**			**69,236**	**67%**	**0%**	**(69,236)**	**-100%**
	CONSULTANT SERV/SURVEY	6020								
	OTHER PROFESSIONAL SER	6049								
2,462	COMM.HOUSING DEV. ORG	6049 03	299,319		123,113	176,206	67%	41%	(114,649)	-38%
	DOWNTOWN LIGHTING	6049 04								
	RECORDING FEES	6049 06	100			100	67%	0%	(100)	-100%
	ADP LOAN PROGRAM	6049 07								
	ENVIRONMENTAL STUDY	6049 08	3,000			3,000	67%	0%	(3,000)	-100%
	CAPITAL IMPROVEMENT P	6049 09								
	PUB.SERV.GRANT EXPENS	6049 10	65,000		31,692	33,308	67%	49%	(17,462)	-27%
	NEIGHBORHOOD GRANT EX	6049 11								
	ENGR-DRAINAGE CDBG	6049 12								
	DEMOLITION 1999-2007	6049 13								
	FACADE IMPR.PROGRAM	6049 14	45,000		8,000	37,000	67%	18%	(33,000)	-73%
	PLANNING	6049 15								
	HABITAT PROGRAM	6049 16								
	PRVO EXPENDITURE	6049 17								
	EATON SCHOOL	6049 18								

			CITY OF HATTIESBURG							
	082285 - CDBG-ENTITLEMENTS		EXPENDITURE REPORT							
			8 Months Ending 05/31/13							
THIS MONTH			ANNUAL	OPEN PO	YTD	REMAINING	PERCENT		....PROJECTED....	
ACTUAL		OBJ/SUB	BUDGET	& CONTRACTS	ACTUAL	BALANCE	PLAN	ACTUAL	OVER/UNDER	%
	HOME BUYERS' EDUCATIO	6049 19								
	EARLY WARNING ALERT P	6049 20								
650	RELOCATION	6049 21	21,864		7,150	14,714	67%	33%	(11,138)	-51%
1,618	LEAD TESTING/ABATEMEN	6049 22	20,000		5,573	14,427	67%	28%	(11,640)	-58%
	ASBESTOS TESTING/ABAT	6049 23	5,000		65	4,935	67%	1%	(4,902)	-98%
	OTHER	6049 99								
---			---	---	---	---	---	---	---	---
4,730	**OTHER PROFESSIONAL**		**459,283**		**175,594**	**283,689**	**67%**	**38%**	**(195,891)**	**-43%**
---			---	---	---	---	---	---	---	---
4,730	**PROFESSIONAL SERVICE**		**528,519**		**175,594**	**352,925**	**67%**	**33%**	**(265,127)**	**-50%**
	COMMUNICATIONS									
32	TELEPHONE AND TELEGRAP	6060	450		224	226	67%	50%	(114)	-25%
---			---	---	---	---	---	---	---	---
32	**COMMUNICATIONS**		**450**		**224**	**226**	**67%**	**50%**	**(114)**	**-25%**
	TRANSPORTATION									
289	TRAVEL EXPENSE	6110	7,000		1,594	5,406	67%	23%	(4,608)	-66%
(18)	MESSENGER/EXPRESS SERV	6130	200		26	174	67%	13%	(160)	-80%
---			---	---	---	---	---	---	---	---
272	**TRANSPORTATION**		**7,200**		**1,621**	**5,579**	**67%**	**23%**	**(4,768)**	**-66%**
	ADVERTISING									
	ADVERTISING	6150	2,000		365	1,635	67%	18%	(1,452)	-73%
---			---	---	---	---	---	---	---	---
	ADVERTISING		**2,000**		**365**	**1,635**	**67%**	**18%**	**(1,452)**	**-73%**
	PRINTING AND BINDING									
	PRINTING-GRANT RELATED	6202								
	FILM PROCESSING	6240	350			350	67%	0%	(350)	-100%
---			---	---	---	---	---	---	---	---
	PRINTING AND BINDING		**350**			**350**	**67%**	**0%**	**(350)**	**-100%**
	REPR/MAINT-OUTSIDE LABO									
	OFFICE EQUIPMENT R&M	6365	1,000		579	421	67%	58%	(131)	-13%
	MOTOR VEHICLE EQ. R&M	6384	500			500	67%	0%	(500)	-100%
---			---	---	---	---	---	---	---	---
	REPR/MAINT-OUTSIDE L		**1,500**		**579**	**921**	**67%**	**39%**	**(631)**	**-42%**
	RENTALS									
	OFFICE EQUIPMENT RENT	6410								
	OTHER RENT	6449								
---			---	---	---	---	---	---	---	---

			CITY OF HATTIESBURG							
	082285 - CDBG-ENTITLEMENTS		EXPENDITURE REPORT							
			8 Months Ending 05/31/13							
THIS MONTH			ANNUAL	OPEN PO	YTD	REMAINING	PERCENT		....PROJECTED....	
ACTUAL		OBJ/SUB	BUDGET	& CONTRACTS	ACTUAL	BALANCE	PLAN	ACTUAL	OVER/UNDER	%
	RENTALS									
	OTHER SERVICES & CHARGE									
	BANK SERV/TRF FEE	6832			53	(53)			79	
	DUES AND MEMBERSHIPS	6840	600		360	240	67%	60%	(60)	-10%
	REGISTRATION FEE/TUITI	6845	1,000		350	650	67%	35%	(474)	-47%
	SERVICES NOT SPECIFIED	6999								
---			---	---	---	---	---	---	---	---
	OTHER SERVICES & CHA		**1,600**		**763**	**837**	**67%**	**48%**	**(455)**	**-28%**
---			---	---	---	---	---	---	---	---
5,034	**OTHER SERVICES & CHAR**		**541,619**		**179,145**	**362,474**	**67%**	**33%**	**(272,901)**	**-50%**
	IMPROVEMENT OTHER THAN									
	DRAINS	7215								
	FACILITIES IMPROVEMEN	7215 01	52,986	40,466		12,520	67%	0%	(52,986)	-100%
	ARLEDGE STREET	7215 06								
	E TIPTON DRAINAGE PRO	7215 16								
	HALL-ALCORN	7215 18								
	EAST CENTRAL	7215 19								
	WALNUT STREET	7215 20								
	HALL AVENUE PHASE III	7215 21								
	MOBILE/BOUIE - PHASE	7215 22								
	KATIE/J HALL - PHASE	7215 23								
	EAST CENTRAL - PHASE	7215 24								
	WALNUT STREET - PHASE	7215 25								
	OLD AIRPORT RD	7215 32								
	DIXIE PINE	7215 33								
	CELESTE PLACE	7215 34								
	OTHER DRAINAGE PROJEC	7215 99	50,000			50,000	67%	0%	(50,000)	-100%
---			---	---	---	---	---	---	---	---
	DRAINS		**102,986**	**40,466**		**62,520**	**67%**	**0%**	**(102,986)**	**-100%**
	SEWERS	7220								
	ARRA SIDEWALKS (WOODLE	7225								
	STREETS & ROADWAYS	7230								
	TUSCAN AVENUE TO BERN	7230 35								
	OTHER STREET IMPR.	7230 99								
---			---	---	---	---	---	---	---	---
	STREETS & ROADWAYS									

			CITY OF HATTIESBURG							
	082285 - CDBG-ENTITLEMENTS		EXPENDITURE REPORT							
			8 Months Ending 05/31/13							
THIS MONTH			ANNUAL	OPEN PO	YTD	REMAINING	PERCENT		....PROJECTED....	
ACTUAL		OBJ/SUB	BUDGET	& CONTRACTS	ACTUAL	BALANCE	PLAN	ACTUAL	OVER/UNDER	%
	CDBG/HOME HOUSING	7254								
8,920	CDBG FULL REHAB	7254 01	269,866		112,460	157,406	67%	42%	(101,176)	-37%
2,500	CDBG HOUSING REPR	7254 02	105,297		22,080	83,217	67%	21%	(72,177)	-69%
	HOME FULL REHAB	7254 03	467,189		87,475	379,714	67%	19%	(335,976)	-72%
	HOME DOWNPAYMENT ASST	7254 04	60,000			60,000	67%	0%	(60,000)	-100%
	AFFORDABLE HOUSING	7254 05								
	HOME REVOLVING LOANS	7254 06								
	WORLD CHANGERS	7254 07								
	ADOPT A HOME	7254 08								
	RECONSTRUCTION	7254 09	22,941		1,600	21,341	67%	7%	(20,541)	-90%
	RECONSTRUCTN/SALV.ARM	7254 10								
	BLUE ROOFS	7254 11	72,181		13,971	58,210	67%	19%	(51,224)	-71%
	EATON SCHOOL	7254 12								
	MICROENTERPRISE PROGR	7254 13	51,000		12,767	38,233	67%	25%	(31,849)	-62%
----------			---------	---------	---------	---------	-----	-----	--------	-----
11,420	**CDBG/HOME HOUSING**		**1,048,474**		**250,353**	**798,121**	**67%**	**24%**	**(672,944)**	**-64%**
	CDBG-ENTITLEMT ASSISTA	7285								
	HOME ENTITLEMT ASSISTA	7286								
	MDA AM DREAM D/P (ADDI	7287								
	OTHER IMPROVEMENTS	7295								
----------			---------	---------	---------	---------	-----	-----	--------	-----
11,420	**IMPROVEMENT OTHER TH**		**1,151,460**	**40,466**	**250,353**	**860,641**	**67%**	**22%**	**(775,930)**	**-67%**
	MACHINERY AND EQUIPMENT									
	OFFICE FURN/EQUIP.	7325								
	DATA PROCESSING EQUIP.	7327								
----------			---------	---------	---------	---------	-----	-----	--------	-----
	MACHINERY AND EQUIPM									
	VEHICLES									
	AUTOMOBILES	7400								
	PICK UP TRUCKS	7420								
----------			---------	---------	---------	---------	-----	-----	--------	-----
	VEHICLES									
----------			---------	---------	---------	---------	-----	-----	--------	-----
11,420	**CAPITAL OUTLAY**		**1,151,460**	**40,466**	**250,353**	**860,641**	**67%**	**22%**	**(775,930)**	**-67%**
----------			---------	---------	---------	---------	-----	-----	--------	-----
40,799	**EXPENDITURES**		**1,930,568**	**40,466**	**564,617**	**1,325,485**	**67%**	**29%**	**(1,083,642)**	**-56%**

			CITY OF HATTIESBURG							
	082500 - CDBG-TRANSFERS		EXPENDITURE REPORT							
			8 Months Ending 05/31/13							
THIS MONTH			ANNUAL	OPEN PO	YTD	REMAINING	PERCENT		....PROJECTED....	
ACTUAL		OBJ/SUB	BUDGET	& CONTRACTS	ACTUAL	BALANCE	PLAN	ACTUAL	OVER/UNDER	%
	_____									
	_____									
	TRANSFERS TO OTHER FUND									
	T/T GENERAL FUND	9000 O1								
	T/T W & S CONSTRUCTION	9000 75								
----------			---------	---------	---------	---------	-----	-----	--------	-----
	TRANSFERS TO OTHER F									
----------			---------	---------	---------	---------	-----	-----	--------	-----
	TRANSFERS									
----------			---------	---------	---------	---------	-----	-----	--------	-----
	EXPENDITURES									

			CITY OF HATTIESBURG							
	087500 - INDUSTRIAL PK-TRANSFERS		EXPENDITURE REPORT							
			8 Months Ending 05/31/13							
THIS MONTH			ANNUAL	OPEN PO	YTD	REMAINING	PERCENT		....PROJECTED....	
ACTUAL		OBJ/SUB	BUDGET	& CONTRACTS	ACTUAL	BALANCE	PLAN	ACTUAL	OVER/UNDER	%
	_____									
	_____									
	TRANSFERS TO OTHER FUND									
	T/T GENERAL FUND	9000 01								
	T/T CITY B & I	9000 13								
	T/T CITY B&I (KOHLER)	9000 13K								
	T/T CITY B&I (SUNBEAM)	9000 13S								
	T/T MUN.ROAD & BRIDGE	9000 72								
	T/T W & S CONSTRUCTION	9000 75								
----------			---------	---------	---------	---------	-----	-----	--------	-----
	TRANSFERS TO OTHER F									
----------			---------	---------	---------	---------	-----	-----	--------	-----
	TRANSFERS									
----------			---------	---------	---------	---------	-----	-----	--------	-----
	EXPENDITURES									

			CITY OF HATTIESBURG							
	087601 - INDUSTRIAL PK-G.O.ACQUISITIONS		EXPENDITURE REPORT							
			8 Months Ending 05/31/13							
THIS MONTH			ANNUAL	OPEN PO	YTD	REMAINING	PERCENT		....PROJECTED....	
ACTUAL		OBJ/SUB	BUDGET	& CONTRACTS	ACTUAL	BALANCE	PLAN	ACTUAL	OVER/UNDER	%
	_____									
	_____									
	OFFICE SUPPLIES									
	OTHER EXPENDABLE OFF.S	5010								
---			---	---	---	---	---	---	---	---
	OFFICE SUPPLIES									
	OPERATING SUPPLIES									
	ASPHALT & ASPHALT PROD	5400								
	MINOR EQUIPMENT	5460								
	OTHER OPERATING MATL/S	5590								
---			---	---	---	---	---	---	---	---
	OPERATING SUPPLIES									
---			---	---	---	---	---	---	---	---
	SUPPLIES AND EXPENSES									
	_____									
	PROFESSIONAL SERVICES									
	ADMINISTRATIVE FEE	6005								
	AUDITING AND ACCOUNTIN	6010			7,980	(7,980)			11,970	
	ARCHITECTURAL	6012								
	ENGINEERING/ENVIRONMEN	6015			2,538	(2,538)			3,807	
	SITE PREPARATION	6016			6,432	(6,432)			9,648	
	APPRAISAL	6017			280	(280)			420	
	CONSULTANT SERV/SURVEY	6020								
62,500	AREA DEV.PARTNERSHIP	6020 01			187,500	(187,500)			281,250	
	OTHER	6020 03								
	IND.PK.MASTER PLAN	6020 04								
---			---	---	---	---	---	---	---	---
62,500	**CONSULTANT SERV/SUR**				**187,500**	**(187,500)**			**281,250**	
2,132	LEGAL	6025			23,106	(23,106)			34,659	
875	OTHER PROFESSIONAL SER	6049			3,225	(3,225)			4,837	
---			---	---	---	---	---	---	---	---
65,507	**PROFESSIONAL SERVICE**				**231,060**	**(231,060)**			**346,590**	
	COMMUNICATIONS									
	TELEPHONE AND TELEGRAP	6060								
	POSTAGE	6070								
---			---	---	---	---	---	---	---	---
	COMMUNICATIONS									

			CITY OF HATTIESBURG							
	087601 - INDUSTRIAL PK-G.O.ACQUISITIONS		EXPENDITURE REPORT							
			8 Months Ending 05/31/13							
THIS MONTH			ANNUAL	OPEN PO	YTD	REMAINING	PERCENT		....PROJECTED....	
ACTUAL		OBJ/SUB	BUDGET	& CONTRACTS	ACTUAL	BALANCE	PLAN	ACTUAL	OVER/UNDER	%
	TRANSPORTATION									
	TRAVEL EXPENSE	6110								
	MESSENGER/EXPRESS SERV	6130								
----------			---------	---------	---------	---------	-----	-----	--------	-----
	TRANSPORTATION									
	ADVERTISING									
	ADVERTISING	6150								
----------			---------	---------	---------	---------	-----	-----	--------	-----
	ADVERTISING									
	PRINTING AND BINDING									
	PRINTING	6200								
----------			---------	---------	---------	---------	-----	-----	--------	-----
	PRINTING AND BINDING									
	INSURANCE									
	FIRE & EXTENDED COVERA	6250								
9,673	PUBLIC LIAB/PROPERTY D	6255			9,673	(9,673)			14,509	
	OTHER INSURANCE	6299								
----------			---------	---------	---------	---------	-----	-----	--------	-----
9,673	**INSURANCE**				**9,673**	**(9,673)**			**14,509**	
	UTILITIES									
	GAS	6300								
	ELECTRICITY	6305								
	WATER	6315								
----------			---------	---------	---------	---------	-----	-----	--------	-----
	UTILITIES									
	REPR/MAINT-OUTSIDE LABO									
	BUILDING R&M	6350								
	SIGN PAINTING	6396								
47,890	OTHER REPAIRS AND MAIN	6399			48,250	(48,250)			72,375	
----------			---------	---------	---------	---------	-----	-----	--------	-----
47,890	**REPR/MAINT-OUTSIDE L**				**48,250**	**(48,250)**			**72,375**	
	RENTALS									
	LAND RENT	6400								
----------			---------	---------	---------	---------	-----	-----	--------	-----
	RENTALS									
	OTHER SERVICES & CHARGE									
	CONTRIBUTIONS	6820								

			CITY OF HATTIESBURG							
	087601 - INDUSTRIAL PK-G.O.ACQUISITIONS		EXPENDITURE REPORT							
			8 Months Ending 05/31/13							
THIS MONTH			ANNUAL	OPEN PO	YTD	REMAINING	PERCENT		....PROJECTED....	
ACTUAL		OBJ/SUB	BUDGET	& CONTRACTS	ACTUAL	BALANCE	PLAN	ACTUAL	OVER/UNDER	%
	FORREST CTY. REPAYMEN	6820 90								
----------			---------	---------	---------	---------	-----	-----	--------	-----
	CONTRIBUTIONS									
	PROPERTY TAXES	6995								
	SERVICES NOT SPECIFIED	6999								
----------			---------	---------	---------	---------	-----	-----	--------	-----
	OTHER SERVICES & CHA									
----------			---------	---------	---------	---------	-----	-----	--------	-----
123,070	**OTHER SERVICES & CHAR**				**288,983**	**(288,983)**			**433,474**	
	_____									
	LAND									
	LAND	7000								
	LEASEHOLDS	7020								
----------			---------	---------	---------	---------	-----	-----	--------	-----
	LAND									
	BUILDING/BLD IMPROVEMEN									
	BUILDINGS	7100								
	TECHNOLOGY BLDG.	7100 11								
----------			---------	---------	---------	---------	-----	-----	--------	-----
	BUILDINGS									
----------			---------	---------	---------	---------	-----	-----	--------	-----
	BUILDING/BLD IMPROVE									
	IMPROVEMENT OTHER THAN									
	STREETS & ROADWAYS	7230								
	OTHER IMPROVEMENTS	7295								
	OWENS-ILLINOIS PROJEC	7295 35								
	USA YEAST RAIL SPUR	7295 36								
	KOHLER EXPANSION	7295 37								
----------			---------	---------	---------	---------	-----	-----	--------	-----
	OTHER IMPROVEMENTS									
----------			---------	---------	---------	---------	-----	-----	--------	-----
	IMPROVEMENT OTHER TH									
----------			---------	---------	---------	---------	-----	-----	--------	-----
	CAPITAL OUTLAY									
	_____									
	BONDS REDEEMED									
	IND/ECON DEV ISSUES	8020								

			CITY OF HATTIESBURG							
	087601 - INDUSTRIAL PK-G.O.ACQUISITIONS		EXPENDITURE REPORT							
			8 Months Ending 05/31/13							
THIS MONTH			ANNUAL	OPEN PO	YTD	REMAINING	PERCENT		....PROJECTED....	
ACTUAL		OBJ/SUB	BUDGET	& CONTRACTS	ACTUAL	BALANCE	PLAN	ACTUAL	OVER/UNDER	%
----------			---------	---------	---------	---------	-----	-----	--------	-----
	BONDS REDEEMED									
	NOTE PRINCIPAL									
	IND. PARK NOTE	8210								
----------			---------	---------	---------	---------	-----	-----	--------	-----
	NOTE PRINCIPAL									
	INTEREST ON NOTES									
	OTHER NOTES	8335								
----------			---------	---------	---------	---------	-----	-----	--------	-----
	INTEREST ON NOTES									
----------			---------	---------	---------	---------	-----	-----	--------	-----
	DEBT SERVICE									
----------			---------	---------	---------	---------	-----	-----	--------	-----
123,070	**EXPENDITURES**				**288,983**	**(288,983)**			**433,474**	

			CITY OF HATTIESBURG							
	087630 - INDUSTRIAL PK-KOHLER PROJECT		EXPENDITURE REPORT							
			8 Months Ending 05/31/13							
THIS MONTH			ANNUAL	OPEN PO	YTD	REMAINING	PERCENT		....PROJECTED....	
ACTUAL		OBJ/SUB	BUDGET	& CONTRACTS	ACTUAL	BALANCE	PLAN	ACTUAL	OVER/UNDER	%
	_____									
	_____									
	PROFESSIONAL SERVICES									
	ENGINEERING	6015								
	LEGAL	6025								
	OTHER PROFESSIONAL SER	6049								
---			---	---	---	---	---	---	---	---
	PROFESSIONAL SERVICE									
---			---	---	---	---	---	---	---	---
	OTHER SERVICES & CHAR									
	_____									
	LAND									
	LAND	7000								
	SITE PREPARATION	7040								
	SITE IMPROVEMENT	7045								
---			---	---	---	---	---	---	---	---
	LAND									
	BUILDING/BLD IMPROVEMEN									
	BUILDINGS	7100								
	KOHLER BLDG. EXPANSIO	7100 21								
---			---	---	---	---	---	---	---	---
	BUILDINGS									
---			---	---	---	---	---	---	---	---
	BUILDING/BLD IMPROVE									
	IMPROVEMENT OTHER THAN									
	STREETS & ROADWAYS	7230								
	OTHER IMPROVEMENTS	7295								
---			---	---	---	---	---	---	---	---
	IMPROVEMENT OTHER TH									
---			---	---	---	---	---	---	---	---
	CAPITAL OUTLAY									
---			---	---	---	---	---	---	---	---
	EXPENDITURES									

			CITY OF HATTIESBURG							
	090500 - 2008 D/T LIGHTING-TRANSFERS		EXPENDITURE REPORT							
			8 Months Ending 05/31/13							
THIS MONTH			ANNUAL	OPEN PO	YTD	REMAINING	PERCENT		....PROJECTED....	
ACTUAL		OBJ/SUB	BUDGET	& CONTRACTS	ACTUAL	BALANCE	PLAN	ACTUAL	OVER/UNDER	%
	_____									
	_____									
	TRANSFERS TO OTHER FUND									
	T/T SPECIAL STREET	9000 08								
	T/T B&I CITY	9000 13								
	T/T 2003 TIF B&I-CHAUV	9000 22								
	T/T 2008 TIF B&I-LINCO	9000 24								
----------			---------	---------	---------	---------	-----	-----	--------	-----
	TRANSFERS TO OTHER F									
----------			---------	---------	---------	---------	-----	-----	--------	-----
	TRANSFERS									
----------			---------	---------	---------	---------	-----	-----	--------	-----
	EXPENDITURES									

			CITY OF HATTIESBURG							
	090602 - 2008 D/T LIGHTING-ISSUE EXP		EXPENDITURE REPORT							
			8 Months Ending 05/31/13							
THIS MONTH			ANNUAL	OPEN PO	YTD	REMAINING	PERCENT		....PROJECTED....	
ACTUAL		OBJ/SUB	BUDGET	& CONTRACTS	ACTUAL	BALANCE	PLAN	ACTUAL	OVER/UNDER	%
	_____									
	_____									
	PROFESSIONAL SERVICES									
	LEGAL	6025								
	OTHER PROFESSIONAL SER	6049								
----------			---------	---------	---------	---------	-----	-----	--------	-----
	PROFESSIONAL SERVICE									
	OTHER SERVICES & CHARGE									
	SERVICES NOT SPECIFIED	6999								
----------			---------	---------	---------	---------	-----	-----	--------	-----
	OTHER SERVICES & CHA									
----------			---------	---------	---------	---------	-----	-----	--------	-----
	OTHER SERVICES & CHAR									
----------			---------	---------	---------	---------	-----	-----	--------	-----
	EXPENDITURES									

			CITY OF HATTIESBURG							
	090603 - 2008 D/T LIGHTING-PROJECT		EXPENDITURE REPORT							
			8 Months Ending 05/31/13							
THIS MONTH			ANNUAL	OPEN PO	YTD	REMAINING	PERCENT		....PROJECTED....	
ACTUAL		OBJ/SUB	BUDGET	& CONTRACTS	ACTUAL	BALANCE	PLAN	ACTUAL	OVER/UNDER	%
	_____									
	_____									
	IMPROVEMENT OTHER THAN									
	OTHER IMPROVEMENTS	7295								
	CHAUVET SQUARE/TIF PR	7295 33								
	LINCOLN CENTER/TIF PR	7295 38								
	D/T LIGHTING/GO NOTE	7295 51								
----------			---------	---------	---------	---------	-----	-----	--------	-----
	OTHER IMPROVEMENTS									
----------			---------	---------	---------	---------	-----	-----	--------	-----
	IMPROVEMENT OTHER TH									
----------			---------	---------	---------	---------	-----	-----	--------	-----
	CAPITAL OUTLAY									
----------			---------	---------	---------	---------	-----	-----	--------	-----
	EXPENDITURES									

			CITY OF HATTIESBURG							
	091500 - TIF CONST-TRANSFERS		EXPENDITURE REPORT							
			8 Months Ending 05/31/13							
THIS MONTH			ANNUAL	OPEN PO	YTD	REMAINING	PERCENT		....PROJECTED....	
ACTUAL		OBJ/SUB	BUDGET	& CONTRACTS	ACTUAL	BALANCE	PLAN	ACTUAL	OVER/UNDER	%
	_____									
	_____									
	TRANSFERS TO OTHER FUND									
	T/T GENERAL FUND	9000 01								
	T/T 2007 TIF B&I-T/C	9000 23								
	T/T KOHLS TIF B&I	9000 25	49		49		67%	100%	24	49%
---			---	---	---	---	---	---	---	---
	TRANSFERS TO OTHER F		**49**		**49**		**67%**	**100%**	**24**	**49%**
---			---	---	---	---	---	---	---	---
	TRANSFERS		**49**		**49**		**67%**	**100%**	**24**	**49%**
---			---	---	---	---	---	---	---	---
	EXPENDITURES		**49**		**49**		**67%**	**100%**	**24**	**49%**

			CITY OF HATTIESBURG							
	091602 - TIF CONST-ISSUE EXP		EXPENDITURE REPORT							
			8 Months Ending 05/31/13							
THIS MONTH			ANNUAL	OPEN PO	YTD	REMAINING	PERCENT		....PROJECTED....	
ACTUAL		OBJ/SUB	BUDGET	& CONTRACTS	ACTUAL	BALANCE	PLAN	ACTUAL	OVER/UNDER	%
	_____									
	_____									
	PROFESSIONAL SERVICES									
	LEGAL	6025								
	OTHER PROFESSIONAL SER	6049								
----------			---------	---------	---------	---------	-----	-----	--------	-----
	PROFESSIONAL SERVICE									
	PRINTING AND BINDING									
	PRINTING	6200								
----------			---------	---------	---------	---------	-----	-----	--------	-----
	PRINTING AND BINDING									
	OTHER SERVICES & CHARGE									
	SERVICES NOT SPECIFIED	6999								
----------			---------	---------	---------	---------	-----	-----	--------	-----
	OTHER SERVICES & CHA									
----------			---------	---------	---------	---------	-----	-----	--------	-----
	OTHER SERVICES & CHAR									
----------			---------	---------	---------	---------	-----	-----	--------	-----
	EXPENDITURES									

			CITY OF HATTIESBURG							
	091603 - TIF CONST-STREETS		EXPENDITURE REPORT							
			8 Months Ending 05/31/13							
THIS MONTH			ANNUAL	OPEN PO	YTD	REMAINING	PERCENT		....PROJECTED....	
ACTUAL		OBJ/SUB	BUDGET	& CONTRACTS	ACTUAL	BALANCE	PLAN	ACTUAL	OVER/UNDER	%
	_____									
	_____									
	IMPROVEMENT OTHER THAN									
	OTHER IMPROVEMENTS	7295								
	'11 KHOLS/TIF PROJ	7295 33								
	'07 TURTLE CREEK/TIF	7295 34								
	'11 TURTLE CREEK/TIF	7295 39								
----------			---------	---------	---------	---------	-----	-----	--------	-----
	OTHER IMPROVEMENTS									
----------			---------	---------	---------	---------	-----	-----	--------	-----
	IMPROVEMENT OTHER TH									
----------			---------	---------	---------	---------	-----	-----	--------	-----
	CAPITAL OUTLAY									
----------			---------	---------	---------	---------	-----	-----	--------	-----
	EXPENDITURES									

			CITY OF HATTIESBURG							
	094500 - '12 W&S BOND CONST-TRANSFERS		EXPENDITURE REPORT							
			8 Months Ending 05/31/13							
THIS MONTH			ANNUAL	OPEN PO	YTD	REMAINING	PERCENT		....PROJECTED....	
ACTUAL		OBJ/SUB	BUDGET	& CONTRACTS	ACTUAL	BALANCE	PLAN	ACTUAL	OVER/UNDER	%
	_____									
	_____									
	TRANSFERS TO OTHER FUND									
	T/T WATER & SEWER B&I	9000 10								
----------			---------	---------	---------	---------	-----	-----	--------	-----
	TRANSFERS TO OTHER F									
----------			---------	---------	---------	---------	-----	-----	--------	-----
	TRANSFERS									
----------			---------	---------	---------	---------	-----	-----	--------	-----
	EXPENDITURES									

			CITY OF HATTIESBURG							
	094602 - 2012 W&S CONST-ISSUE EXP		EXPENDITURE REPORT							
			8 Months Ending 05/31/13							
THIS MONTH			ANNUAL	OPEN PO	YTD	REMAINING	PERCENT		....PROJECTED....	
ACTUAL		OBJ/SUB	BUDGET	& CONTRACTS	ACTUAL	BALANCE	PLAN	ACTUAL	OVER/UNDER	%
	_____									
	_____									
	PROFESSIONAL SERVICES									
	LEGAL	6025								
	OTHER PROFESSIONAL SER	6049								
----------			---------	---------	---------	---------	-----	-----	--------	-----
	PROFESSIONAL SERVICE									
	OTHER SERVICES & CHARGE									
	SERVICES NOT SPECIFIED	6999								
----------			---------	---------	---------	---------	-----	-----	--------	-----
	OTHER SERVICES & CHA									
----------			---------	---------	---------	---------	-----	-----	--------	-----
	OTHER SERVICES & CHAR									
----------			---------	---------	---------	---------	-----	-----	--------	-----
	EXPENDITURES									

			CITY OF HATTIESBURG							
	094695 - 2012 W&S CONSTR.-CAPITAL PROJ		EXPENDITURE REPORT							
			8 Months Ending 05/31/13							
THIS MONTH			ANNUAL	OPEN PO	YTD	REMAINING	PERCENT		....PROJECTED....	
ACTUAL		OBJ/SUB	BUDGET	& CONTRACTS	ACTUAL	BALANCE	PLAN	ACTUAL	OVER/UNDER	%
	_____									
	_____									
	OPERATING SUPPLIES									
	ASPHALT & ASPHALT PROD	5400								
---			---	---	---	---	---	---	---	---
	OPERATING SUPPLIES									
---			---	---	---	---	---	---	---	---
	SUPPLIES AND EXPENSES									
	_____									
	PROFESSIONAL SERVICES									
	ENGINEERING	6015								
	LEGAL	6025								
	OTHER PROFESSIONAL SER	6049								
---			---	---	---	---	---	---	---	---
	PROFESSIONAL SERVICE									
	REPR/MAINT-OUTSIDE LABO									
	STREETS & STRUCTURES R	6360								
---			---	---	---	---	---	---	---	---
	REPR/MAINT-OUTSIDE L									
	OTHER SERVICES & CHARGE									
	SERVICES NOT SPECIFIED	6999								
---			---	---	---	---	---	---	---	---
	OTHER SERVICES & CHA									
---			---	---	---	---	---	---	---	---
	OTHER SERVICES & CHAR									
	_____									
	IMPROVEMENT OTHER THAN									
	SEWERS	7220								
428	SEWER PHASE III	7220 01	241,232	92,217	148,569	446	67%	62%	(18,378)	-8%
	S.LAGOON SLUDGE REMOV	7220 27								
	SEWER PHASE I	7220 49	498,300		7,423	490,878	67%	1%	(487,165)	-98%
174,426	SEWER PHASE II	7220 50	973,700	160,547	470,633	342,520	67%	48%	(267,750)	-27%
2,313	SEWER PHASE IV	7220 51	238,707	186,280	52,407	20	67%	22%	(160,096)	-67%
	CCTV SEWER INSPECTION	7220 96	29,105		29,105		67%	100%	14,552	50%
	LAGOON DREDGING LOAN	7220 97								
---			---	---	---	---	---	---	---	---
177,166	**SEWERS**		**1,981,044**	**439,044**	**708,137**	**833,863**	**67%**	**36%**	**(918,838)**	**-46%**

			CITY OF HATTIESBURG							
	094695 - 2012 W&S CONSTR.-CAPITAL PROJ		EXPENDITURE REPORT							
			8 Months Ending 05/31/13							
THIS MONTH			ANNUAL	OPEN PO	YTD	REMAINING	PERCENT		....PROJECTED....	
ACTUAL		OBJ/SUB	BUDGET	& CONTRACTS	ACTUAL	BALANCE	PLAN	ACTUAL	OVER/UNDER	%
	WATER SYSTEMS	7245								
202,413	HWY 98 BOOSTER STATIO	7245 03	392,157	17,040	375,117		67%	96%	170,518	43%
1,350	HWY 98 ELEVATED WTR T	7245 04	517,923	450	34,975	482,498	67%	7%	(465,460)	-90%
	WATER PHASE II	7245 05	444,735			444,735	67%	0%	(444,735)	-100%
	WATER PHASE III	7245 06								
	VETERANS BLVD WTR CON	7245 08	237,881			237,881	67%	0%	(237,881)	-100%
	WESLEY WELL #2	7245 09	7,000		6,450	550	67%	92%	2,675	38%
	COUNTRY CLUB WTR II	7245 18	272,599	14,747	197,524	60,329	67%	72%	23,687	9%
	TATUM-BONHOMIE WTR LI	7245 23	281,748		281,748		67%	100%	140,874	50%
16,713	HWY 98 FIRE LINES	7245 28	3,190,281	119,065	2,352,833	718,382	67%	74%	338,968	11%
	WATER PHASE I	7245 50	669,920	675	45,919	623,326	67%	7%	(601,041)	-90%
----------			---------	---------	---------	---------	-----	-----	--------	-----
220,475	**WATER SYSTEMS**		**6,014,244**	**151,977**	**3,294,567**	**2,567,700**	**67%**	**55%**	**(1,072,393)**	**-18%**
	OTHER IMPROVEMENTS	7295								
	MISC.OTHER IMPROVEMEN	7295 99								
----------			---------	---------	---------	---------	-----	-----	--------	-----
	OTHER IMPROVEMENTS									
----------			---------	---------	---------	---------	-----	-----	--------	-----
397,641	**IMPROVEMENT OTHER TH**		**7,995,288**	**591,021**	**4,002,703**	**3,401,564**	**67%**	**50%**	**(1,991,233)**	**-25%**
----------			---------	---------	---------	---------	-----	-----	--------	-----
397,641	**CAPITAL OUTLAY**		**7,995,288**	**591,021**	**4,002,703**	**3,401,564**	**67%**	**50%**	**(1,991,233)**	**-25%**
----------			---------	---------	---------	---------	-----	-----	--------	-----
397,641	**EXPENDITURES**		**7,995,288**	**591,021**	**4,002,703**	**3,401,564**	**67%**	**50%**	**(1,991,233)**	**-25%**

			CITY OF HATTIESBURG							
	095641 - 2001 BOND CONSTR-ZOO IMPR		EXPENDITURE REPORT							
			8 Months Ending 05/31/13							
THIS MONTH			ANNUAL	OPEN PO	YTD	REMAINING	PERCENT		....PROJECTED....	
ACTUAL		OBJ/SUB	BUDGET	& CONTRACTS	ACTUAL	BALANCE	PLAN	ACTUAL	OVER/UNDER	%
	_____									
	_____									
	BUILDING/BLD IMPROVEMEN									
	BUILDINGS	7100								
	REHAB. EXISTING BLDGS	7100 12								
----------			---------	---------	---------	---------	-----	-----	--------	-----
	BUILDINGS									
----------			---------	---------	---------	---------	-----	-----	--------	-----
	BUILDING/BLD IMPROVE									
	IMPROVEMENT OTHER THAN									
	OTHER IMPROVEMENTS	7295								
	ASIAN EXHIBIT	7295 11								
	MS HABITAT EXHIBIT	7295 12	187,300		42,268	145,032	67%	23%	(123,898)	-66%
	LION EXHIBIT	7295 14								
	SOUTH AMERICAN EXHIBI	7295 25								
----------			---------	---------	---------	---------	-----	-----	--------	-----
	OTHER IMPROVEMENTS		**187,300**		**42,268**	**145,032**	**67%**	**23%**	**(123,898)**	**-66%**
----------			---------	---------	---------	---------	-----	-----	--------	-----
	IMPROVEMENT OTHER TH		**187,300**		**42,268**	**145,032**	**67%**	**23%**	**(123,898)**	**-66%**
----------			---------	---------	---------	---------	-----	-----	--------	-----
	CAPITAL OUTLAY		**187,300**		**42,268**	**145,032**	**67%**	**23%**	**(123,898)**	**-66%**
----------			---------	---------	---------	---------	-----	-----	--------	-----
	EXPENDITURES		**187,300**		**42,268**	**145,032**	**67%**	**23%**	**(123,898)**	**-66%**

			CITY OF HATTIESBURG							
	096201 - MDB CAPITAL PROJ-STREETS		EXPENDITURE REPORT							
			8 Months Ending 05/31/13							
THIS MONTH			ANNUAL	OPEN PO	YTD	REMAINING	PERCENT		....PROJECTED....	
ACTUAL		OBJ/SUB	BUDGET	& CONTRACTS	ACTUAL	BALANCE	PLAN	ACTUAL	OVER/UNDER	%
	_____									
	_____									
	IMPROVEMENT OTHER THAN									
	STREETS & ROADWAYS	7230								
	4TH ST WIDENING-MDOT	7230 09	104,095			104,095	67%	0%	(104,095)	-100%
	CHAIN PARK PROJ-MDOT	7230 76								
	CHAIN PARK-MDOT ARRA	7230 77	289		286	3	67%	99%	140	48%
	CHAIN PARK-HUD	7230 78	5,910		5,206	704	67%	88%	1,899	32%
----------			---------	---------	---------	---------	-----	-----	--------	-----
	STREETS & ROADWAYS		**110,294**		**5,492**	**104,802**	**67%**	**5%**	**(102,056)**	**-93%**
----------			---------	---------	---------	---------	-----	-----	--------	-----
	IMPROVEMENT OTHER TH		**110,294**		**5,492**	**104,802**	**67%**	**5%**	**(102,056)**	**-93%**
----------			---------	---------	---------	---------	-----	-----	--------	-----
	CAPITAL OUTLAY		**110,294**		**5,492**	**104,802**	**67%**	**5%**	**(102,056)**	**-93%**
----------			---------	---------	---------	---------	-----	-----	--------	-----
	EXPENDITURES		**110,294**		**5,492**	**104,802**	**67%**	**5%**	**(102,056)**	**-93%**

			CITY OF HATTIESBURG							
	096402 - MDB CAPITAL PROJ-ECONOMIC DEV.		EXPENDITURE REPORT							
			8 Months Ending 05/31/13							
THIS MONTH			ANNUAL	OPEN PO	YTD	REMAINING	PERCENT		....PROJECTED....	
ACTUAL		OBJ/SUB	BUDGET	& CONTRACTS	ACTUAL	BALANCE	PLAN	ACTUAL	OVER/UNDER	%
	_____									
	_____									
	BUILDING/BLD IMPROVEMEN									
	BUILDING IMPROVEMENTS	7150								
	DEPOT PROJECT-GRANT R	7150 15								
	DEPOT PROJ NON-GRANT	7150 31								
	DEPOT PROJ-MDB	7150 35								
----------			---------	---------	---------	---------	-----	-----	--------	-----
	BUILDING IMPROVEMEN									
----------			---------	---------	---------	---------	-----	-----	--------	-----
	BUILDING/BLD IMPROVE									
----------			---------	---------	---------	---------	-----	-----	--------	-----
	CAPITAL OUTLAY									
----------			---------	---------	---------	---------	-----	-----	--------	-----
	EXPENDITURES									

			CITY OF HATTIESBURG							
	096602 - MDB CAPITAL PROJ-ISSUEEXP.		EXPENDITURE REPORT							
			8 Months Ending 05/31/13							
THIS MONTH			ANNUAL	OPEN PO	YTD	REMAINING	PERCENT		....PROJECTED....	
ACTUAL		OBJ/SUB	BUDGET	& CONTRACTS	ACTUAL	BALANCE	PLAN	ACTUAL	OVER/UNDER	%
	_____									
	_____									
	PROFESSIONAL SERVICES									
	LEGAL	6025								
----------			---------	---------	---------	---------	-----	-----	--------	-----
	PROFESSIONAL SERVICE									
	PRINTING AND BINDING									
	PRINTING	6200								
----------			---------	---------	---------	---------	-----	-----	--------	-----
	PRINTING AND BINDING									
----------			---------	---------	---------	---------	-----	-----	--------	-----
	OTHER SERVICES & CHAR									
----------			---------	---------	---------	---------	-----	-----	--------	-----
	EXPENDITURES									

			CITY OF HATTIESBURG							
	096695 - MDB CAPITAL PROJ-CAPITAL PROJ		EXPENDITURE REPORT							
			8 Months Ending 05/31/13							
THIS MONTH			ANNUAL	OPEN PO	YTD	REMAINING	PERCENT		....PROJECTED....	
ACTUAL		OBJ/SUB	BUDGET	& CONTRACTS	ACTUAL	BALANCE	PLAN	ACTUAL	OVER/UNDER	%
	_____									
	_____									
	PROFESSIONAL SERVICES									
	CONSULTANT SERV/SURVEY	6020								
	OTHER PROFESSIONAL SER	6049								
----------			---------	---------	---------	---------	-----	-----	--------	-----
	PROFESSIONAL SERVICE									
----------			---------	---------	---------	---------	-----	-----	--------	-----
	OTHER SERVICES & CHAR									
	_____									
	BUILDING/BLD IMPROVEMEN									
	BUILDINGS	7100								
	POLICE COMPLEX RENOVA	7150 07								
----------			---------	---------	---------	---------	-----	-----	--------	-----
	BUILDINGS									
----------			---------	---------	---------	---------	-----	-----	--------	-----
	BUILDING/BLD IMPROVE									
	IMPROVEMENT OTHER THAN									
	DRAINS	7215								
	DRAINAGE(CORPS OF ENG	7215 31								
----------			---------	---------	---------	---------	-----	-----	--------	-----
	DRAINS									
	SEWERS	7220								
	PROGRAMMED SEWER PROJ	7220 99								
----------			---------	---------	---------	---------	-----	-----	--------	-----
	SEWERS									
	WATER SYSTEMS	7245								
	PROGRAMMED WATER PROJ	7245 99								
----------			---------	---------	---------	---------	-----	-----	--------	-----
	WATER SYSTEMS									
----------			---------	---------	---------	---------	-----	-----	--------	-----
	IMPROVEMENT OTHER TH									
	MACHINERY AND EQUIPMENT									
	DATA PROCESSING EQUIP.	7327								
----------			---------	---------	---------	---------	-----	-----	--------	-----
	MACHINERY AND EQUIPM									
----------			---------	---------	---------	---------	-----	-----	--------	-----

			CITY OF HATTIESBURG							
	096695 - MDB CAPITAL PROJ-CAPITAL PROJ		EXPENDITURE REPORT							
			8 Months Ending 05/31/13							
THIS MONTH			ANNUAL	OPEN PO	YTD	REMAINING	PERCENT		....PROJECTED....	
ACTUAL		OBJ/SUB	BUDGET	& CONTRACTS	ACTUAL	BALANCE	PLAN	ACTUAL	OVER/UNDER	%
	CAPITAL OUTLAY									
----------			---------	---------	---------	---------	-----	-----	--------	-----
	EXPENDITURES									

			CITY OF HATTIESBURG							
	098300 - K.P.ZOO CAPITAL-REC.MAINT.		EXPENDITURE REPORT							
			8 Months Ending 05/31/13							
THIS MONTH			ANNUAL	OPEN PO	YTD	REMAINING	PERCENT		....PROJECTED....	
ACTUAL		OBJ/SUB	BUDGET	& CONTRACTS	ACTUAL	BALANCE	PLAN	ACTUAL	OVER/UNDER	%
	_____									
	_____									
	IMPROVEMENT OTHER THAN									
	KAB/LANDSCAPING	7226								
	RECREATION IMPROVEMENT	7256								
	MISC.REC.IMPR.	7256 99								
----------			---------	---------	---------	---------	-----	-----	--------	-----
	RECREATION IMPROVEM									
----------			---------	---------	---------	---------	-----	-----	--------	-----
	IMPROVEMENT OTHER TH									
----------			---------	---------	---------	---------	-----	-----	--------	-----
	CAPITAL OUTLAY									
----------			---------	---------	---------	---------	-----	-----	--------	-----
	EXPENDITURES									

			CITY OF HATTIESBURG							
	098341 - K.P.ZOO CAPITAL-KPZ		EXPENDITURE REPORT							
			8 Months Ending 05/31/13							
THIS MONTH			ANNUAL	OPEN PO	YTD	REMAINING	PERCENT		....PROJECTED....	
ACTUAL		OBJ/SUB	BUDGET	& CONTRACTS	ACTUAL	BALANCE	PLAN	ACTUAL	OVER/UNDER	%
	_____									
	_____									
	OPERATING SUPPLIES									
	OTHER OPERATING MATL/S	5590								
---			---	---	---	---	---	---	---	---
	OPERATING SUPPLIES									
---			---	---	---	---	---	---	---	---
	SUPPLIES AND EXPENSES									
	_____									
	OTHER SERVICES & CHARGE									
	SERVICES NOT SPECIFIED	6999								
---			---	---	---	---	---	---	---	---
	OTHER SERVICES & CHA									
---			---	---	---	---	---	---	---	---
	OTHER SERVICES & CHAR									
	_____									
	IMPROVEMENT OTHER THAN									
	OTHER IMPROVEMENTS	7295								
	ADAMS PLACE	7295 04								
	QUARANTINE BLDG PROJE	7295 08	86,097		83,900	2,197	67%	97%	39,753	46%
	TIGER/LION EXHIBIT	7295 14								
	ZEBRA EXHIBIT	7295 17								
	SMALL ANIMAL EXHIBITS	7295 23								
	AFRICAN EXHIBIT	7295 25								
	MISC.OTHER IMPROVEMEN	7295 99								
---			---	---	---	---	---	---	---	---
	OTHER IMPROVEMENTS		**86,097**		**83,900**	**2,197**	**67%**	**97%**	**39,753**	**46%**
---			---	---	---	---	---	---	---	---
	IMPROVEMENT OTHER TH		**86,097**		**83,900**	**2,197**	**67%**	**97%**	**39,753**	**46%**
	MACHINERY AND EQUIPMENT									
	OTHER EQUIPMENT	7399								
---			---	---	---	---	---	---	---	---
	MACHINERY AND EQUIPM									
	OTHER									
	ZOOLOGICAL ANIMALS	7505								
---			---	---	---	---	---	---	---	---
	OTHER									

			CITY OF HATTIESBURG							
	098341 - K.P.ZOO CAPITAL-KPZ		EXPENDITURE REPORT							
			8 Months Ending 05/31/13							
THIS MONTH			ANNUAL	OPEN PO	YTD	REMAINING	PERCENT		....PROJECTED....	
ACTUAL		OBJ/SUB	BUDGET	& CONTRACTS	ACTUAL	BALANCE	PLAN	ACTUAL	OVER/UNDER	%
----------			---------	---------	---------	---------	-----	-----	--------	-----
	CAPITAL OUTLAY		**86,097**		**83,900**	**2,197**	**67%**	**97%**	**39,753**	**46%**
----------			---------	---------	---------	---------	-----	-----	--------	-----
	EXPENDITURES		**86,097**		**83,900**	**2,197**	**67%**	**97%**	**39,753**	**46%**

			CITY OF HATTIESBURG							
	098553 - K.P.ZOO CAPITAL-CEMETERY		EXPENDITURE REPORT							
			8 Months Ending 05/31/13							
THIS MONTH			ANNUAL	OPEN PO	YTD	REMAINING	PERCENT		....PROJECTED....	
ACTUAL		OBJ/SUB	BUDGET	& CONTRACTS	ACTUAL	BALANCE	PLAN	ACTUAL	OVER/UNDER	%
	_____									
	_____									
	IMPROVEMENT OTHER THAN									
	LANDSCAPING	7250								
	OTHER IMPROVEMENTS	7295								
	CEMETERY PROJ.IMPR.	7295 30								
----------			---------	---------	---------	---------	-----	-----	--------	-----
	OTHER IMPROVEMENTS									
----------			---------	---------	---------	---------	-----	-----	--------	-----
	IMPROVEMENT OTHER TH									
----------			---------	---------	---------	---------	-----	-----	--------	-----
	CAPITAL OUTLAY									
----------			---------	---------	---------	---------	-----	-----	--------	-----
	EXPENDITURES									

			CITY OF HATTIESBURG							
	099602 - 2010 W & S GO BOND-ISSUE EXP.		EXPENDITURE REPORT							
			8 Months Ending 05/31/13							
THIS MONTH			ANNUAL	OPEN PO	YTD	REMAINING	PERCENT		....PROJECTED....	
ACTUAL		OBJ/SUB	BUDGET	& CONTRACTS	ACTUAL	BALANCE	PLAN	ACTUAL	OVER/UNDER	%
	_____									
	_____									
	PROFESSIONAL SERVICES									
	LEGAL	6025								
	OTHER PROFESSIONAL SER	6049								
----------			---------	---------	---------	---------	-----	-----	--------	-----
	PROFESSIONAL SERVICE									
	PRINTING AND BINDING									
	PRINTING	6200								
----------			---------	---------	---------	---------	-----	-----	--------	-----
	PRINTING AND BINDING									
	OTHER SERVICES & CHARGE									
	SERVICES NOT SPECIFIED	6999								
----------			---------	---------	---------	---------	-----	-----	--------	-----
	OTHER SERVICES & CHA									
----------			---------	---------	---------	---------	-----	-----	--------	-----
	OTHER SERVICES & CHAR									
----------			---------	---------	---------	---------	-----	-----	--------	-----
	EXPENDITURES									

			CITY OF HATTIESBURG							
	099603 - 2010 W & S GO BOND-STREETS		EXPENDITURE REPORT							
			8 Months Ending 05/31/13							
THIS MONTH			ANNUAL	OPEN PO	YTD	REMAINING	PERCENT		....PROJECTED....	
ACTUAL		OBJ/SUB	BUDGET	& CONTRACTS	ACTUAL	BALANCE	PLAN	ACTUAL	OVER/UNDER	%
	_____									
	_____									
	IMPROVEMENT OTHER THAN									
	STREETS & ROADWAYS	7230								
	N.31ST AVENUE	7230 06								
	NEW SCHOOL ROAD	7230 08								
	E.4TH STREET	7230 11								
	S.28TH AVENUE	7230 14								
	LINCOLN ROAD-#3	7230 27								
	LINCOLN ROAD-#4	7230 29								
	N.40TH AVENUE	7230 30								
	MONTAGUE-N.40TH TO N3	7230 31								
	ED TURNER DRIVE	7230 32								
	S.31ST-HARDY TO MAMIE	7230 33								
	MAMIE FROM S.28TH-31S	7230 34								
	TUSCAN-MLK TO BERNARD	7230 35								
	CLASSIC DR-HWY 42-GOL	7230 36								
----------			---------	---------	---------	---------	-----	-----	--------	-----
	STREETS & ROADWAYS									
----------			---------	---------	---------	---------	-----	-----	--------	-----
	IMPROVEMENT OTHER TH									
----------			---------	---------	---------	---------	-----	-----	--------	-----
	CAPITAL OUTLAY									
----------			---------	---------	---------	---------	-----	-----	--------	-----
	EXPENDITURES									

			CITY OF HATTIESBURG							
	099606 - 2010 W & S GO BOND-DRAINAGE		EXPENDITURE REPORT							
			8 Months Ending 05/31/13							
THIS MONTH			ANNUAL	OPEN PO	YTD	REMAINING	PERCENT		....PROJECTED....	
ACTUAL		OBJ/SUB	BUDGET	& CONTRACTS	ACTUAL	BALANCE	PLAN	ACTUAL	OVER/UNDER	%
	_____									
	_____									
	IMPROVEMENT OTHER THAN									
	DRAINS	7215								
	ASHFORD-EASTSIDE TO M	7215 03								
	E.HARDY/WILLIAMS	7215 05								
	EDWARD ST.@RAILROAD	7215 11								
----------			---------	---------	---------	---------	-----	-----	--------	-----
	DRAINS									
----------			---------	---------	---------	---------	-----	-----	--------	-----
	IMPROVEMENT OTHER TH									
----------			---------	---------	---------	---------	-----	-----	--------	-----
	CAPITAL OUTLAY									
----------			---------	---------	---------	---------	-----	-----	--------	-----
	EXPENDITURES									

			CITY OF HATTIESBURG							
	099627 - 2010 W & S GO BOND-WATER		EXPENDITURE REPORT							
			8 Months Ending 05/31/13							
THIS MONTH			ANNUAL	OPEN PO	YTD	REMAINING	PERCENT		....PROJECTED....	
ACTUAL		OBJ/SUB	BUDGET	& CONTRACTS	ACTUAL	BALANCE	PLAN	ACTUAL	OVER/UNDER	%
	_____									
	_____									
	LAND									
	LAND	7000								
----------			---------	---------	---------	---------	-----	-----	--------	-----
	LAND									
	IMPROVEMENT OTHER THAN									
	WATER SYSTEMS	7245								
	IND.PARK WATER LINES	7245 01								
	IND.PARK ELEVATED TAN	7245 04								
	WATER WELL@ PLANT #1	7245 05								
	VETERANS BLVD - WATER	7245 08								
	WESLEY FILTRATION PLA	7245 09								
----------			---------	---------	---------	---------	-----	-----	--------	-----
	WATER SYSTEMS									
----------			---------	---------	---------	---------	-----	-----	--------	-----
	IMPROVEMENT OTHER TH									
----------			---------	---------	---------	---------	-----	-----	--------	-----
	CAPITAL OUTLAY									
----------			---------	---------	---------	---------	-----	-----	--------	-----
	EXPENDITURES									

			CITY OF HATTIESBURG							
	099630 - 2010 W & S GO BOND-SEWERS		EXPENDITURE REPORT							
			8 Months Ending 05/31/13							
THIS MONTH			ANNUAL	OPEN PO	YTD	REMAINING	PERCENT		....PROJECTED....	
ACTUAL		OBJ/SUB	BUDGET	& CONTRACTS	ACTUAL	BALANCE	PLAN	ACTUAL	OVER/UNDER	%
	_____									
	_____									
	IMPROVEMENT OTHER THAN									
	SEWERS	7220								
	FRANKLIN STREET	7220 12								
	ARLEDGE-MANNING TO CT	7220 22								
	COLUMBIA-PROV.TO RAWL	7220 23								
	ASHFORD-C.CLUB TO MLK	7220 24								
	PROVIDENCE-COLUMBIA T	7220 25								
6,960	N.LAGOON EXPANSION	7220 26	868,299		801,412	66,887	67%	92%	333,819	38%
	S.LAGOON DISINFECTION	7220 27								
	IND.PARK SEWER LINES	7220 28								
---			---	---	---	---	---	---	---	---
6,960	**SEWERS**		**868,299**		**801,412**	**66,887**	**67%**	**92%**	**333,819**	**38%**
---			---	---	---	---	---	---	---	---
6,960	**IMPROVEMENT OTHER TH**		**868,299**		**801,412**	**66,887**	**67%**	**92%**	**333,819**	**38%**
---			---	---	---	---	---	---	---	---
6,960	**CAPITAL OUTLAY**		**868,299**		**801,412**	**66,887**	**67%**	**92%**	**333,819**	**38%**
---			---	---	---	---	---	---	---	---
6,960	**EXPENDITURES**		**868,299**		**801,412**	**66,887**	**67%**	**92%**	**333,819**	**38%**

			CITY OF HATTIESBURG							
	105500 - '06 W&S BOND CONST-TRANSFERS		EXPENDITURE REPORT							
			8 Months Ending 05/31/13							
THIS MONTH			ANNUAL	OPEN PO	YTD	REMAINING	PERCENT		....PROJECTED....	
ACTUAL		OBJ/SUB	BUDGET	& CONTRACTS	ACTUAL	BALANCE	PLAN	ACTUAL	OVER/UNDER	%
	_____									
	_____									
	TRANSFERS TO OTHER FUND									
	T/T WATER & SEWER B&I	9000 10								
----------			---------	---------	---------	---------	-----	-----	--------	-----
	TRANSFERS TO OTHER F									
----------			---------	---------	---------	---------	-----	-----	--------	-----
	TRANSFERS									
----------			---------	---------	---------	---------	-----	-----	--------	-----
	EXPENDITURES									

			CITY OF HATTIESBURG							
	105602 - 2006 W&S CONST-ISSUE EXP		EXPENDITURE REPORT							
			8 Months Ending 05/31/13							
THIS MONTH			ANNUAL	OPEN PO	YTD	REMAINING	PERCENT		....PROJECTED....	
ACTUAL		OBJ/SUB	BUDGET	& CONTRACTS	ACTUAL	BALANCE	PLAN	ACTUAL	OVER/UNDER	%
	_____									
	_____									
	PROFESSIONAL SERVICES									
	LEGAL	6025								
	OTHER PROFESSIONAL SER	6049								
----------			---------	---------	---------	---------	-----	-----	--------	-----
	PROFESSIONAL SERVICE									
	OTHER SERVICES & CHARGE									
	SERVICES NOT SPECIFIED	6999								
----------			---------	---------	---------	---------	-----	-----	--------	-----
	OTHER SERVICES & CHA									
----------			---------	---------	---------	---------	-----	-----	--------	-----
	OTHER SERVICES & CHAR									
----------			---------	---------	---------	---------	-----	-----	--------	-----
	EXPENDITURES									

			CITY OF HATTIESBURG							
	105695 - 2006 W&S CONSTR.-CAPITAL PROJ		EXPENDITURE REPORT							
			8 Months Ending 05/31/13							
THIS MONTH			ANNUAL	OPEN PO	YTD	REMAINING	PERCENT		....PROJECTED....	
ACTUAL		OBJ/SUB	BUDGET	& CONTRACTS	ACTUAL	BALANCE	PLAN	ACTUAL	OVER/UNDER	%
	_____									
	_____									
	OPERATING SUPPLIES									
	ASPHALT & ASPHALT PROD	5400								
----------			---------	---------	---------	---------	-----	-----	--------	-----
	OPERATING SUPPLIES									
----------			---------	---------	---------	---------	-----	-----	--------	-----
	SUPPLIES AND EXPENSES									
	_____									
	PROFESSIONAL SERVICES									
	ENGINEERING	6015								
	LEGAL	6025								
	OTHER PROFESSIONAL SER	6049								
----------			---------	---------	---------	---------	-----	-----	--------	-----
	PROFESSIONAL SERVICE									
	REPR/MAINT-OUTSIDE LABO									
	STREETS & STRUCTURES R	6360								
----------			---------	---------	---------	---------	-----	-----	--------	-----
	REPR/MAINT-OUTSIDE L									
	OTHER SERVICES & CHARGE									
	SERVICES NOT SPECIFIED	6999								
----------			---------	---------	---------	---------	-----	-----	--------	-----
	OTHER SERVICES & CHA									
----------			---------	---------	---------	---------	-----	-----	--------	-----
	OTHER SERVICES & CHAR									
	_____									
	IMPROVEMENT OTHER THAN									
	SEWERS	7220								
	S1-N.LAGOON EXPANSION	7220 26								
	S2-W 592 SWR W OF RAI	7220 38								
	S3-E 592 SWR E OF RAI	7220 39								
	S4-W BOND SWR W OF RA	7220 40								
	S5-E BOND SWR E OF RA	7220 41								
	S6-ANNEXATION AREA SE	7220 42								
	S7-SEWER LIFT STA IMP	7220 43								
	SULLIVAN KIL TO J MIM	7220 44								
	HWY 49 N SEWER	7220 45								

			CITY OF HATTIESBURG							
	105695 - 2006 W&S CONSTR.-CAPITAL PROJ		EXPENDITURE REPORT							
			8 Months Ending 05/31/13							
THIS MONTH			ANNUAL	OPEN PO	YTD	REMAINING	PERCENT		....PROJECTED....	
ACTUAL		OBJ/SUB	BUDGET	& CONTRACTS	ACTUAL	BALANCE	PLAN	ACTUAL	OVER/UNDER	%
	PROGRAMMED SEWER PROJ	7220 99								
----------			---------	---------	---------	---------	-----	-----	--------	-----
	SEWERS									
	WATER SYSTEMS	7245								
	JAMES ST WTR PLT-MATC	7245 02								
	W1-COUNTRY CLUB WATER	7245 18								
	W2-WESLEY PLANT TREAT	7245 26								
	W3-WATER WELL@ PLANT	7245 27								
	W4-FIRE LINES-CNTRY C	7245 28								
	PROGRAMMED WATER PROJ	7245 99								
----------			---------	---------	---------	---------	-----	-----	--------	-----
	WATER SYSTEMS									
	OTHER IMPROVEMENTS	7295								
	MISC.OTHER IMPROVEMEN	7295 99								
----------			---------	---------	---------	---------	-----	-----	--------	-----
	OTHER IMPROVEMENTS									
----------			---------	---------	---------	---------	-----	-----	--------	-----
	IMPROVEMENT OTHER TH									
----------			---------	---------	---------	---------	-----	-----	--------	-----
	CAPITAL OUTLAY									
----------			---------	---------	---------	---------	-----	-----	--------	-----
	EXPENDITURES									

			CITY OF HATTIESBURG							
	107500 - SPEC.SALES TAX-TRANSFERS		EXPENDITURE REPORT							
			8 Months Ending 05/31/13							
THIS MONTH			ANNUAL	OPEN PO	YTD	REMAINING	PERCENT		....PROJECTED....	
ACTUAL		OBJ/SUB	BUDGET	& CONTRACTS	ACTUAL	BALANCE	PLAN	ACTUAL	OVER/UNDER	%
	_____									
	_____									
	TRANSFERS TO OTHER FUND									
	T/T GENERAL FUND	9000 01								
10,427	T/T CITY B & I	9000 13			83,416	(83,416)			125,124	
----------			---------	---------	---------	---------	-----	-----	--------	-----
10,427	**TRANSFERS TO OTHER F**				**83,416**	**(83,416)**			**125,124**	
----------			---------	---------	---------	---------	-----	-----	--------	-----
10,427	**TRANSFERS**				**83,416**	**(83,416)**			**125,124**	
----------			---------	---------	---------	---------	-----	-----	--------	-----
10,427	**EXPENDITURES**				**83,416**	**(83,416)**			**125,124**	

			CITY OF HATTIESBURG							
	107706 - SPEC.SALES TAX-T&A EXPEND.		EXPENDITURE REPORT							
			8 Months Ending 05/31/13							
THIS MONTH			ANNUAL	OPEN PO	YTD	REMAINING	PERCENT		....PROJECTED....	
ACTUAL		OBJ/SUB	BUDGET	& CONTRACTS	ACTUAL	BALANCE	PLAN	ACTUAL	OVER/UNDER	%
	_____									
	_____									
	PROFESSIONAL SERVICES									
	OTHER PROFESSIONAL SER	6049								
46,470	TOURISM COMMISSION	6049 01			305,816	(305,816)			458,724	
417,041	CONVENTION COMMISSION	6049 02			2,905,445	(2,905,445)			4,358,167	
----------			---------	---------	---------	---------	-----	-----	--------	-----
463,511	**OTHER PROFESSIONAL**				**3,211,261**	**(3,211,261)**			**4,816,891**	
----------			---------	---------	---------	---------	-----	-----	--------	-----
463,511	**PROFESSIONAL SERVICE**				**3,211,261**	**(3,211,261)**			**4,816,891**	
----------			---------	---------	---------	---------	-----	-----	--------	-----
463,511	**OTHER SERVICES & CHAR**				**3,211,261**	**(3,211,261)**			**4,816,891**	
----------			---------	---------	---------	---------	-----	-----	--------	-----
463,511	**EXPENDITURES**				**3,211,261**	**(3,211,261)**			**4,816,891**	

			CITY OF HATTIESBURG							
	109704 - GROUP INS.TRUST-T&A EXPEND.		EXPENDITURE REPORT							
			8 Months Ending 05/31/13							
THIS MONTH			ANNUAL	OPEN PO	YTD	REMAINING	PERCENT		....PROJECTED....	
ACTUAL		OBJ/SUB	BUDGET	& CONTRACTS	ACTUAL	BALANCE	PLAN	ACTUAL	OVER/UNDER	%
	_____									
	_____									
	OTHER SERVICES & CHARGE									
	BANK SERV/TRF FEE	6832								
63,780	ADMIN PAID	6833			516,264	(516,264)			774,396	
346,300	CLAIMS PAID	6834			2,151,578	(2,151,578)			3,227,367	
----------			---------	---------	---------	---------	-----	-----	--------	-----
410,080	**OTHER SERVICES & CHA**				**2,667,842**	**(2,667,842)**			**4,001,763**	
----------			---------	---------	---------	---------	-----	-----	--------	-----
410,080	**OTHER SERVICES & CHAR**				**2,667,842**	**(2,667,842)**			**4,001,763**	
----------			---------	---------	---------	---------	-----	-----	--------	-----
410,080	**EXPENDITURES**				**2,667,842**	**(2,667,842)**			**4,001,763**	

		CITY OF HATTIESBURG							. 1
001001 - GENERAL FUND REVENUES		REVENUE REPORT							6/3/13
		8 MONTHS ENDING 05/31/13							
		.....CURRENT.....			.....YEAR-TO-DATE.....			ANNUAL	UNREALIZED
	OBJ/SUB	ESTIMATED	ACTUAL	%REV	ESTIMATED	ACTUAL	%REV	ESTIMATE	BALANCE
REVENUES	200								
TAXES-OTHER	206A								
PAYMENT IN LIEU OF TAXE	2060								
HOUSING AUTHORITY	2065	2,333			18,667	31,287	167%	28,000	(3,287)
MERCHANTS COMPANY	2066								
COLLECTIONS-P/Y EXCESS	2070								
PAYMENT IN LIEU OF T		**2,333**			**18,667**	**31,287**	**167%**	**28,000**	**(3,287)**
TAXES-OTHER		**2,333**			**18,667**	**31,287**	**167%**	**28,000**	**(3,287)**
LICENSES, PERMITS & FEES	220A								
PRIVILEGE LICENSES	2200	13,333	12,572	94%	106,667	92,423	86%	160,000	67,577
FRANCHISES	2210								
ELECTRICAL FRANCHISE	2211	241,666	3,444	1%	1,933,333	2,016,964	104%	2,900,000	883,036
SOLID WASTE OPER/FRANC	2212	18,750	3,226	17%	150,000	66,592	44%	225,000	158,408
GAS FRANCHISE	2215	16,250	69,920	430%	130,000	133,403	102%	195,000	61,597
CABLE T.V. FRANCHISE	2219	38,333	115,661	301%	306,667	339,674	110%	460,000	120,326
FRANCHISES		**315,000**	**192,250**	**61%**	**2,520,000**	**2,556,632**	**101%**	**3,780,000**	**1,223,368**
BLDG/INSP PERMITS & FEE	2220								
BUILDING PERMIT/INSPEC	2221	32,083	16,677	51%	256,667	229,579	89%	385,000	155,421
FIRE INSPECTION	2222								
SIGN PERMIT	2223	1,333	849	63%	10,667	11,445	107%	16,000	4,555
LAND CODE ENFORCEMENT	2224	2,666	3,806	142%	21,333	19,789	92%	32,000	12,211
GAS & PLUMBING	2225	1,000	450	45%	8,000	7,000	87%	12,000	5,000
ELECTRICAL INSPECTION	2226	2,083	448	21%	16,667	7,042	42%	25,000	17,958
DEMOLITION PERMIT	2227	166	300	180%	1,333	1,600	120%	2,000	400
HOUSE MOVING	2228								
BLDG/INSP PERMITS &		**39,333**	**22,530**	**57%**	**314,667**	**276,455**	**87%**	**472,000**	**195,545**
OTHER PERMITS & FEES	2230								
PUBLIC RECORDS ACCESS	2233								
PROPERTY CLEAN-UP COST	2234	416	150	36%	3,333	2,525	75%	5,000	2,475
TAXI BADGE PERMIT	2235	8	25	312%	67	175	261%	100	(75)
WRECKER REGISTRATION F	2236	33	125	378%	267	300	112%	400	100
BURN OR MISC FIRE PERM	2237	83			667	515	77%	1,000	485
AMBULANCE PERMIT	2238					900			(900)

		CITY OF HATTIESBURG							. 1
001001 - GENERAL FUND REVENUES		REVENUE REPORT							6/3/13
		8 MONTHS ENDING 05/31/13							
		.....CURRENT.....			.....YEAR-TO-DATE.....			ANNUAL	UNREALIZED
	OBJ/SUB	ESTIMATED	ACTUAL	%REV	ESTIMATED	ACTUAL	%REV	ESTIMATE	BALANCE
ZONING PETITION FEE	2240								
ZONING CERTIFICATE FEE	2245	500	675	135%	4,000	4,750	118%	6,000	1,250
TITLE PLEDGE LICENSE F	2248								
EXAMINATION FEE	2250								
CONTRACTOR LICENSE FEE	2255								
ORDINANCE SALES	2260								
ORDINANCE VIOLATION FE	2265								
DATA PROCESSING FEES	2280								
NSF CHECK FEE	2290	41			333	200	60%	500	300
MISC. PERMITS & FEES	2299	1,250	259	20%	10,000	20,769	207%	15,000	(5,769)
	----------	----------	---------	----	----------	---------	----	----------	----------
OTHER PERMITS & FEES		**2,333**	**1,234**	**52%**	**18,667**	**30,134**	**161%**	**28,000**	**(2,134)**
	----------	----------	---------	----	----------	---------	----	----------	----------
LICENSES, PERMITS & F		370,000	228,586	61%	2,960,000	2,955,644	99%	4,440,000	1,484,356
INTER-GOVERNMNTL REVENUE	230A								
FEDERAL GRANTS	230B								
JUST./USM-PROJECT SAFE	2304					10,031			(10,031)
JUST./USM-POLICE CORPS	2305								
JUST.-OTHER	2307								
JUST.-COPS SECURE SCHOO	2309								
JUST.-JAIL DIVERSION	2310	5,228			41,824	59,485	142%	62,736	3,251
JUST.-BYRNE GRANTS	2311	2,004			16,034	9,363	58%	24,051	14,688
JUST.-DOMESTIC PREP'06	2312	4,650	1,795	38%	37,200	5,513	14%	55,800	50,287
JUST.-COPS IN SCHOOLS	2313								
JUST.-DOMESTIC PREPARED	2314	2,291	7,857	342%	18,333	32,265	175%	27,500	(4,765)
JUST.-COPS METHAMPHETAM	2315								
JUST.-COPS HIRING RECOV	2316								
JUST.-UNIVERSAL COPS	2317								
JUST.-COPS TECHNOLOGY	2318								
JUST.-LLEBG '04	2319								
SAFE COMMUNITY PROJECT	2320								
NRCS-USDA STORM RELATED	2322	51,826			414,615			621,923	621,923
FHWA-STORM RELATED	2323								
FEMA-EMER. WARNING SIRE	2324								
FEMA-'04 REGIONAL RESPO	2325								
FIREFIGHTERS GRANT	2326	6,612			52,899	79,348	149%	79,348	

		CITY OF HATTIESBURG						. 1
001001 - GENERAL FUND REVENUES		REVENUE REPORT						6/3/13
		8 MONTHS ENDING 05/31/13						
		.....CURRENT.....			.....YEAR-TO-DATE.....			ANNUAL	UNREALIZED
	OBJ/SUB	ESTIMATED	ACTUAL	%REV	ESTIMATED	ACTUAL	%REV	ESTIMATE	BALANCE
FEMA-'05 REGIONAL RESPO	2327								
FEMA-CITIZENS CORPS	2328								
LAW ENF.GRANTS-OTHER	2329								
FEMA/HAZARD MITIG/GENER	2336								
FEMA RELIEF	2337	60,000			480,000	23,944	4%	720,000	696,056
CDBG-FIRE STATION	2338	16,760			134,082	201,123	150%	201,123	
MISC FEDERAL GRANTS	2339	105			842			1,263	1,263
ARRA-STOP VIOLENCE GRAN	2348								
FEMA RELIEF ADMIN.	2349								
DEPT.OF DEFENSE-CAMP SH	2350								
EPA-BROWNSFIELD PROJ	2356								
HUD-MIDTOWN STUDY	2360	2,339	872	37%	18,719	14,625	78%	28,079	13,454
HUD/MDA HUB CITY LOFT P	2361								
	----------	----------	---------	----	----------	---------	----	----------	----------
FEDERAL GRANTS		**151,818**	**10,524**	**6%**	**1,214,549**	**435,696**	**35%**	**1,821,823**	**1,386,127**
STATE GRANTS	250B								
MOSQUITO CONTROL GRANT	2504								
ARCHIVES & HISTORY	2505								
JUVENILE PREVENTION PRO	2510								
JUVENILE ACCT.INCENTIVE	2511	5,120			40,963	61,318	149%	61,445	127
EMER.SHELTER-MDA GRANT	2513								
I.P.-HYBERPLASTIC-MDA G	2514								
POLICE ACADEMY REIMB.	2515								
SOLID WASTE GRANT	2518	6,250			50,000	75,000	150%	75,000	
URBAN YOUTH CORPS MDOT	2519	1,525			12,207	18,310	149%	18,310	
DEQ GRANTS(SO.LAGOON ST	2520								
ARTS COMMISSION GRANT	2521								
BEAUTIFICATION-VARIOUS	2522								
MS CITY CORPS COUNCIL	2523								
STOP VIOLENCE GRANT	2526	1,704			13,635	13,043	95%	20,453	7,410
ALCOHOL INCENTIVE	2527	6,935			55,485	49,229	88%	83,227	33,998
JUSTICE ASSISTANCE	2528								
DISASTER RELIEF	2545								
MEMA-DOMESTIC PREPAREDN	2550								
MEMA-SAFE ROOMS	2551	15,680			125,443	188,165	150%	188,165	
MDOT GRANT-DEPOT PROJEC	2556								

		CITY OF HATTIESBURG							. 1
001001 - GENERAL FUND REVENUES		REVENUE REPORT							6/3/13
		8 MONTHS ENDING 05/31/13							
		.....CURRENT.....			.....YEAR-TO-DATE.....			ANNUAL	UNREALIZED
	OBJ/SUB	ESTIMATED	ACTUAL	%REV	ESTIMATED	ACTUAL	%REV	ESTIMATE	BALANCE
MDOT GRANT-VISITOR'S CT	2557								
MDOT GRANT-TRAFFIC STUD	2558								
	---	---	---	---	---	---	---	---	---
STATE GRANTS		**37,216**			**297,733**	**405,065**	**136%**	**446,600**	**41,535**
STATE-SHARED REVENUE	260B								
GENERAL SALES TAX	2600	1,666,666	1,868,361	112%	13,333,333	13,928,540	104%	20,000,000	6,071,460
CITY UTILITY TAX	2601	500	364	72%	4,000	2,321	58%	6,000	3,679
SALES TAX-SRF REIMB.	2602		36,105			288,839			(288,839)
ALCOHOLIC BEV. LICENSE	2610	12,500	14,625	117%	100,000	99,900	99%	150,000	50,100
MOTOR VEH.PRIVILEGE TAX	2635	8,333			66,667	60,669	91%	100,000	39,331
PAT HARRISON WATERWAY D	2665								
HATT.METROPLTN. PLANNIN	2670	27,146			217,169	114,809	52%	325,754	210,945
MISC DORMANT ACCOUNT RF	2699								
	---	---	---	---	---	---	---	---	---
STATE-SHARED REVENUE		**1,715,146**	**1,919,454**	**111%**	**13,721,169**	**14,495,078**	**105%**	**20,581,754**	**6,086,676**
CITY/COUNTY-SHARED REVEN	270B								
FORREST CTY	2705								
FORREST CTY CAMP SHELBY	2705 01								
FORREST CTY GORDON CRK	2705 02								
FORREST GENERAL CTY HOS	2706								
FORREST-INFRAST.IMPR.	2707								
LAMAR-INFRAST.IMPR.	2708								
LAMAR/FORREST-HAZ.WASTE	2709								
PETAL/F-CO FLOOD INUNDA	2718	1,333			10,667			16,000	16,000
FORREST CTY-TWIN FORKS	2719								
HPSD-COPS IN SCHOOLS	2720								
CONV.COMM/TOURISM BUREA	2725								
METRO WAGES/MILEAGE-FOR	2735	4,166	21,554	517%	33,333	47,697	143%	50,000	2,303
METRO NARC.O/T-FORREST	2736								
MEMA/HAZARD MITIG/GENER	2739								
	---	---	---	---	---	---	---	---	---
CITY/COUNTY-SHARED RE		**5,500**	**21,554**	**391%**	**44,000**	**47,697**	**108%**	**66,000**	**18,303**
CHARGES FOR SERVICES	280A								
PUBLIC SAFETY	2850								
CRIME SCENE UNIT CONT	2855	2,083	5,000	240%	16,667	30,000	179%	25,000	(5,000)
FIRE DPT.SERV FOR OTHE	2860	416			3,333	90	2%	5,000	4,910
800 MHZ RADIO ACCESS F	2865								

		CITY OF HATTIESBURG						. 1
001001 - GENERAL FUND REVENUES		REVENUE REPORT						6/3/13
		8 MONTHS ENDING 05/31/13						
		.....CURRENT.....			.....YEAR-TO-DATE.....			ANNUAL	UNREALIZED
	OBJ/SUB	ESTIMATED	ACTUAL	%REV	ESTIMATED	ACTUAL	%REV	ESTIMATE	BALANCE
POLICE/FIRE-SPECIAL DU	2870	13,333	13,008	97%	106,667	110,495	103%	160,000	49,505
P&F LATERAL TRNG REIMB	2880								
DRUG ENF.AGENCY O/T RE	2881		1,024			7,500			(7,500)
HOMELAND SECURITY O/T	2882					1,454			(1,454)
US MARSHALL O/T REIMB.	2883		3,967			12,302			(12,302)
FED BUREAU INVEST O/T	2884		1,122			3,950			(3,950)
PUBLIC SAFETY		**15,833**	**24,121**	**152%**	**126,667**	**165,790**	**130%**	**190,000**	**24,210**
TROLLEY SERVICE	2890								
CONV.CENTER TROLLEY FE	2895								
TROLLEY RECEIPTS	2896								
TROLLEY SERVICE									
STREETS	2900								
STREET WORK	2901								
PARKING METERS	2910	166	294	177%	1,333	1,337	100%	2,000	663
PARKING FINES	2915	1,000	441	44%	8,000	10,190	127%	12,000	1,810
CROSSING LIGHT FEES	2920	8			67	81	120%	100	19
LOT CLEAN-UP/HEAVY TRA	2930	83			667			1,000	1,000
CDBG LOT CLEAN-UP/DEMO	2931	416			3,333			5,000	5,000
STREETS		**1,675**	**735**	**43%**	**13,400**	**11,608**	**86%**	**20,100**	**8,492**
SANITATION	2950								
TRASH HAULING	2960	11,666	10,448	89%	93,333	86,741	92%	140,000	53,259
RESIDENTL WASTE COLLEC	2965	173,333	177,992	102%	1,386,667	1,375,409	99%	2,080,000	704,591
SANITA-REFUND & RECOVE	2970								
SANITATION		**185,000**	**188,439**	**101%**	**1,480,000**	**1,462,150**	**98%**	**2,220,000**	**757,850**
CHARGES FOR SERVICES		**202,508**	**213,296**	**105%**	**1,620,067**	**1,639,548**	**101%**	**2,430,100**	**790,552**
FINES AND FORFEITS	330A								
POLICE FINES	3320	116,666	63,771	54%	933,333	1,019,736	109%	1,400,000	380,264
CITY COURT COSTS	3321	16,666	8,919	53%	133,333	149,712	112%	200,000	50,288
CCC-JAIL REIMB.	3322	166	68	40%	1,333	1,102	82%	2,000	899
ENVIR CT-CODE VIOLATION	3323					629			(629)
ANIMAL CONTROL	3327		50			1,065			(1,065)

		CITY OF HATTIESBURG							. 1
001001 - GENERAL FUND REVENUES		REVENUE REPORT							6/3/13
		8 MONTHS ENDING 05/31/13							
		.....CURRENT.....			.....YEAR-TO-DATE.....			ANNUAL	UNREALIZED
	OBJ/SUB	ESTIMATED	ACTUAL	%REV	ESTIMATED	ACTUAL	%REV	ESTIMATE	BALANCE
FINES AND FORFEITS		**133,500**	**72,807**	**54%**	**1,068,000**	**1,172,244**	**109%**	**1,602,000**	**429,756**
MISCELLANEOUS	340A								
INTEREST EARNINGS	3400								
CERTIFICATES OF DEPOSI	3402								
OTHER INTEREST-CD'S	3403								
SAVINGS ACCOUNT/MMA	3405	333	772	231%	2,667	3,628	136%	4,000	372
INTEREST-GRANT MONIES	3406								
OTHER INTEREST-MMA	3407								
REPURCHASE AGREEMENTS	3408								
TREASURY NOTES	3409								
INTEREST EARNINGS		**333**	**772**	**231%**	**2,667**	**3,628**	**136%**	**4,000**	**372**
RENTS AND ROYALTIES	3410								
LAND	3411								
LAMAR OUTDOOR ADVERTI	3411 05								
ALWEST ADVERTISING	3411 10								
MS.POWER-HWY.42	3411 11								
TRITELL COMMUNICATION	3411 12								
LAND									
BUILDING	3412								
DEPOT FACILITY	3412 01	1,250	2,575	206%	10,000	12,475	124%	15,000	2,525
P&F ACADEMY RENTALS	3412 02					200			(200)
SEXUAL ASSAULT CRISIS	3412 05								
MERCHANTS	3412 07	200	200	100%	1,600	1,600	100%	2,400	800
USM CELLULAR ONE RENT	3412 41								
HUBSOUTH/WATER TOWER	3412 62								
OTHER BLDG. RENT	3412 99								
BUILDING		**1,450**	**2,775**	**191%**	**11,600**	**14,275**	**123%**	**17,400**	**3,125**
PARKING GARAGE-CIVIC C	3415	2,500	3,595	143%	20,000	21,389	106%	30,000	8,611
PARKING GARAGE-PINE ST	3416	2,916	4,890	167%	23,333	26,164	112%	35,000	8,836
PARKING SPACES	3417								
MAIN STREET PARKING L	3417 01	500	60	12%	4,000	2,560	64%	6,000	3,440
CHURCH PARKING LOT	3417 02	416	750	180%	3,333	3,725	111%	5,000	1,275

		CITY OF HATTIESBURG						.	1
001001 - GENERAL FUND REVENUES		REVENUE REPORT							6/3/13
		8 MONTHS ENDING 05/31/13							
		.....CURRENT.....			.....YEAR-TO-DATE.....			ANNUAL	UNREALIZED
	OBJ/SUB	ESTIMATED	ACTUAL	%REV	ESTIMATED	ACTUAL	%REV	ESTIMATE	BALANCE
RAILROAD PARKING LOT	3417 03	1,083	2,400	221%	8,667	11,290	130%	13,000	1,710
MOBILE ST. PKG.LOT #1	3417 04	275	70	25%	2,200	2,040	92%	3,300	1,260
MOBILE ST. PKG.LOT #2	3417 05								
BATSON STREET PKG. LO	3417 06								
HEMPHILL PKG. LOT	3417 07	150	150	100%	1,200	1,200	100%	1,800	600
EAST PINE PKG.LOT	3417 08	37			300	300	100%	450	150
OTHER	3417 09								
	---	---	---	---	---	---	---	---	---
PARKING SPACES		**2,462**	**3,430**	**139%**	**19,700**	**21,115**	**107%**	**29,550**	**8,435**
EQUIPMENT	3419								
	---	---	---	---	---	---	---	---	---
RENTS AND ROYALTIES		**9,329**	**14,690**	**157%**	**74,633**	**82,943**	**111%**	**111,950**	**29,007**
CEMETERY FEES	3420	2,416	1,820	75%	19,333	23,700	122%	29,000	5,300
CONTRIBUTIONS-PUBLIC	3450								
CONTRIB-GORDONS CRK STU	3450 01								
CONTRIB-REV 911 MINUTES	3450 02	416			3,333	5,000	150%	5,000	
CONTRIB-MDTWN STDY MAT	3458								
CONTRIBUTIONS-OTHER	3459								
	---	---	---	---	---	---	---	---	---
CONTRIB-REV 911 MINU		**416**			**3,333**	**5,000**	**150%**	**5,000**	
CONTRIBUTIONS-PRIVATE	3460								
CONTRIB-EUREKA SCHOOL	3461								
CONTRIB-NCBM-BROWNFIEL	3462								
CONTRIB-SENIOR FARE	3463								
CONTRIB-MAYOR'S YOUTH	3464								
CONTRIB-BC HEALTHY HOM	3465								
CONTRIB-NIGHT OUT AGAI	3466	450			3,600			5,400	5,400
CONTRIB-MDTWN STDY MAT	3468								
CONTRIB-OTHER	3469								
	---	---	---	---	---	---	---	---	---
CONTRIBUTIONS-PRIVAT		**450**			**3,600**			**5,400**	**5,400**
POLICE DEPT-MISC CHARGE	3590	4,166	4,280	102%	33,333	50,030	150%	50,000	(30)
OTHER MISC. REVENUE	3599								
	---	---	---	---	---	---	---	---	---
MISCELLANEOUS		**17,112**	**21,562**	**126%**	**136,900**	**165,301**	**120%**	**205,350**	**40,049**
TRANSFERS	380A								

		CITY OF HATTIESBURG							. 1
001001 - GENERAL FUND REVENUES		REVENUE REPORT							6/3/13
		8 MONTHS ENDING 05/31/13							
		.....CURRENT.....			.....YEAR-TO-DATE.....			ANNUAL	UNREALIZED
	OBJ/SUB	ESTIMATED	ACTUAL	%REV	ESTIMATED	ACTUAL	%REV	ESTIMATE	BALANCE
TRANSFERS FROM OTHR FND	3800								
T/F H'BURG REDEV.AUTH.	3800 101								
T/F GOVERNMENT COMPLEX	3800 104								
T/F 2002 USA YEAST/LAG	3800 106								
T/F SPEC.SALES TAX	3800 107								
T/F WATER & SEWER	3800 11	36,039	4,790	13%	288,317	38,317	13%	432,475	394,158
T/F POL.FORFEITURES	3800 19								
T/F POL.FORF O/T(HURR	3800 19HR								
T/F '03 TIF B&I CHAUVE	3800 22								
T/F TAX COLLECTORS-GPT	3800 27	1,023,750	233391-	22%	8,190,000	10,891,530	132%	12,285,000	1,393,470
T/F TAX COLL-C.C.FEE	3800 27CC								
T/F TAX COLL-EXCESS BI	3800 27EB	3,166			25,333			38,000	38,000
T/F TAX COLL-CHKG INT	3800 27ICHK	333			2,667			4,000	4,000
T/F TAX COLL-INT/PEN	3800 27IP	26,666	25,761	96%	213,333	150,639	70%	320,000	169,361
T/F W & S CONSTRUCTION	3800 75								
T/F COM.DEV.BLK.GRANT	3800 82								
T/F INDUSTRIAL PARK DE	3800 87								
T/F 2007 TIF CONST-TUR	3800 91								
T/F 2001 STREETS,SWRS,	3800 95								
	----------	----------	--------	----	----------	--------	----	----------	----------
TRANSFERS FROM OTHR		**1,089,956**	**202840-**	**18%**	**8,719,650**	**11,080,486**	**127%**	**13,079,475**	**1,998,989**
	----------	----------	--------	----	----------	--------	----	----------	----------
TRANSFERS		**1,089,956**	**202840-**	**18%**	**8,719,650**	**11,080,486**	**127%**	**13,079,475**	**1,998,989**
NON-REVENUE RECEIPTS	390A								
SALE OF BONDS	3910								
BOND PROCEEDS	3912								
ACCRUED INT-BONDS	3915								
	----------	----------	--------	----	----------	--------	----	----------	----------
SALE OF BONDS									
SALE OF REAL ESTATE	3920		62			62			(62)
SALE OF TIMBER	3923								
SALE OF EASEMENTS	3925								
SALE OF CEMETERY LOTS	3930	3,750	1,550	41%	30,000	40,785	135%	45,000	4,215
SALE OF EQUIPMENT	3940	4,166			33,333	11,382	34%	50,000	38,618
SALE OF SCRAP MATERIAL	3943	250			2,000	612	30%	3,000	2,388
SALE OF MISC. ITEMS	3945								
SALE OF MAPS/PUBLICATIO	3947					83			(83)

		CITY OF HATTIESBURG							. 1
001001 - GENERAL FUND REVENUES		REVENUE REPORT							6/3/13
		8 MONTHS ENDING 05/31/13							
		.....CURRENT.....			.....YEAR-TO-DATE.....			ANNUAL	UNREALIZED
	OBJ/SUB	ESTIMATED	ACTUAL	%REV	ESTIMATED	ACTUAL	%REV	ESTIMATE	BALANCE
SALE OF RECYCLABLE ITEM	3948								
MDB LOAN PYMT-HUB CITY	3950	10,283	10,118	98%	82,267	50,588	61%	123,400	72,812
KERR MAGEE PROJECT	3960								
MS TANK PROJECT	3961								
INSURANCE REIMB-STORM	3962	25,000			200,000			300,000	300,000
VENDING COMM./REFUNDS	3964					31			(31)
REFUND & RECOVERY	3965	1,666	214	12%	13,333	41,742	313%	20,000	(21,742)
RECOVERY OF DAMAGE CLAI	3967								
REFUND/RECOVERY-INFO SY	3968								
RECOVERY-PERS SERV/EQUI	3969								
CAPITAL LEASE PROCEEDS	3970	87,259			698,075			1,047,112	1,047,112
TIF DEPOSIT/PROCEEDS	3971								
NOTE PROCEEDS	3975								
FIRE STATION (MDB)	3975 03								
CHURCH PROJ (MDB)	3975 07								
	----------	----------	---------	----	----------	---------	----	----------	----------
NOTE PROCEEDS									
	----------	----------	---------	----	----------	---------	----	----------	----------
NON-REVENUE RECEIPTS		**132,376**	**11,943**	**9%**	**1,059,008**	**145,285**	**13%**	**1,588,512**	**1,443,227**
BEGINNING CASH BALANCE	399A								
APPROPRIABLE FUND BALAN	3999	402,608			3,220,867			4,831,301	4,831,301
	----------	----------	---------	----	----------	---------	----	----------	----------
BEGINNING CASH BALANC		**402,608**			**3,220,867**			**4,831,301**	**4,831,301**
	----------	----------	---------	----	----------	---------	----	----------	----------
REVENUES		**4,260,076**	**2,296,886**	**53%**	**34,080,610**	**32,573,331**	**95%**	**51,120,915**	**18,547,584**

		CITY OF HATTIESBURG							. 8
002002 - PKS/REC FUND REVENUES		REVENUE REPORT							6/3/13
		8 MONTHS ENDING 05/31/13							
		.....CURRENT.....			.....YEAR-TO-DATE.....			ANNUAL	UNREALIZED
	OBJ/SUB	ESTIMATED	ACTUAL	%REV	ESTIMATED	ACTUAL	%REV	ESTIMATE	BALANCE
REVENUES	200								
LICENSES, PERMITS & FEES	220A								
OTHER PERMITS & FEES	2230								
NSF CHECK FEE	2290								
	----------	----------	---------	----	----------	---------	----	----------	----------
OTHER PERMITS & FEES									
	----------	----------	---------	----	----------	---------	----	----------	----------
LICENSES, PERMITS & F									
INTER-GOVERNMNTL REVENUE	230A								
FEDERAL GRANTS	230B								
FEMA RELIEF	2337								
MISC FEDERAL GRANTS	2339								
NATL PARK SER/LAND WTR	2351								
	----------	----------	---------	----	----------	---------	----	----------	----------
FEDERAL GRANTS									
STATE GRANTS	250B								
MDOT-INTERCHANGE ENHANC	2508								
DISASTER RELIEF	2545								
	----------	----------	---------	----	----------	---------	----	----------	----------
STATE GRANTS									
CITY/COUNTY SHARED REVEN	270B								
MISCELLANEOUS GRANTS	2740								
PEOPLES PARK	2740 01								
THAMES SCHOOL	2740 02								
SUMMER DAY CAMP	2740 03	2,716			21,735			32,603	32,603
OTHER	2740 99	833			6,667	10,000	149%	10,000	
	----------	----------	---------	----	----------	---------	----	----------	----------
MISCELLANEOUS GRANTS		**3,550**			**28,402**	**10,000**	**35%**	**42,603**	**32,603**
	----------	----------	---------	----	----------	---------	----	----------	----------
CITY/COUNTY SHARED RE		**3,550**			**28,402**	**10,000**	**35%**	**42,603**	**32,603**
CHARGES FOR SERVICES	280A								
WORKSHOP TRNG FEES	2892								
CULTURE AND RECREATION	3100								
SWIM FEES-C.E. ROY/5TH	3110	50			400			600	600
SWIM FEES-DAHMER PARK	3112	100			800			1,200	1,200
SWIM FEES-REC. CTR. PO	3115	100			800			1,200	1,200
ADULT GOLF FEES	3117								

		CITY OF HATTIESBURG							. 8
002002 - PKS/REC FUND REVENUES		REVENUE REPORT							6/3/13
		8 MONTHS ENDING 05/31/13							
		.....CURRENT.....			.....YEAR-TO-DATE.....			ANNUAL	UNREALIZED
	OBJ/SUB	ESTIMATED	ACTUAL	%REV	ESTIMATED	ACTUAL	%REV	ESTIMATE	BALANCE
TENNIS FEES	3118								
FENCING FEES	3119								
PLAYGROUND FEES	3120								
SUMMER DAY CAMP	3122								
KAMPER PARK CONCESSION	3130								
BALLPARK CONCESSIONS	3131	541			4,333			6,500	6,500
CERAMIC CONCESSIONS	3134								
KPZ GIFT SHOP CONCESSI	3135								
ZOO ADMISSIONS	3137								
TATUM PK PAVILION USE	3138		80			120			(120)
EASTSIDE PK PAVILION U	3139	16	80	500%	133	200	150%	200	
MCNAIR REC CTR USE FEE	3140								
KPZ PAVILION USE FEE	3145								
DAHMER PAVILION USE FE	3147	66	365	553%	533	645	121%	800	155
KP ED CENTER USE FEE	3149								
BALLFIELD USE FEES	3150	416	600	144%	3,333	2,400	72%	5,000	2,600
PARKS-MISC USE FEES	3151	58	40	68%	467	1,140	244%	700	(440)
YOUTH TEAM FEES	3160								
FLAG FOOTBALL	3160 01								
LITTLE TIGERS BASKETB	3160 02	41			333			500	500
JUNIOR GOLF FEES	3160 03								
T-BALL	3160 05								
GIRLS' SOFTBALL	3160 06								
BOYS' SOFTBALL	3160 07								
GIRLS FASTPITCH	3160 10								
BOYS FASTPITCH	3160 11								
TACKLE FOOTBALL	3160 15								
	----------	----------	---------	----	----------	---------	----	----------	----------
YOUTH TEAM FEES		**41**			**333**			**500**	**500**
ADULT TEAM FEES	3162								
CHURCH LEAGUE BASKETB	3162 01								
ADULT BASKETBALL	3162 02	291			2,333	2,540	108%	3,500	960
ADULT CO-ED SOFTBALL	3162 03	250			2,000	2,940	147%	3,000	60
ADULT MEN'S SOFTBALL	3162 04	666	1,000	150%	5,333	3,125	58%	8,000	4,875
ADULT WOMEN'S SOFTBAL	3162 05								
ADULT FOOTBALL	3162 06								

		CITY OF HATTIESBURG							. 8
002002 - PKS/REC FUND REVENUES		REVENUE REPORT							6/3/13
		8 MONTHS ENDING 05/31/13							
		.....CURRENT.....			.....YEAR-TO-DATE.....			ANNUAL	UNREALIZED
	OBJ/SUB	ESTIMATED	ACTUAL	%REV	ESTIMATED	ACTUAL	%REV	ESTIMATE	BALANCE
ADULT SOFTBALL-CHURCH	3162 07	333			2,667	250	9%	4,000	3,750
ADULT SOCCER	3162 08	350			2,800			4,200	4,200
ADULT FLAG FOOTBALL	3162 09	83			667			1,000	1,000
ADULT TEAM FEES		**1,975**	**1,000**	**50%**	**15,800**	**8,855**	**56%**	**23,700**	**14,845**
CERAMICS CLASS FEES	3170								
DRAMA,ART,DANCE LESSON	3178								
"MOKEY" TRAIN RIDES	3181								
CAROUSEL RIDES	3185								
OTHER	3190								
CULTURE AND RECREATI		**3,366**	**2,165**	**64%**	**26,933**	**13,360**	**49%**	**40,400**	**27,040**
CHARGES FOR SERVICES		**3,366**	**2,165**	**64%**	**26,933**	**13,360**	**49%**	**40,400**	**27,040**
MISCELLANEOUS	340A								
INTEREST EARNINGS	3400								
CERTIFICATES OF DEPOSI	3402								
SAVINGS ACCOUNT/MMA	3405	33	68	206%	267	238	89%	400	162
INTEREST EARNINGS		**33**	**68**	**206%**	**267**	**238**	**89%**	**400**	**162**
CONTRIBUTIONS-PUBLIC	3450								
CONTRIBUTIONS-FORREST	3455	7,500	32,902	438%	60,000	52,902	88%	90,000	37,098
CONTRIBUTIONS-PUBLIC		**7,500**	**32,902**	**438%**	**60,000**	**52,902**	**88%**	**90,000**	**37,098**
CONTRIBUTIONS-PRIVATE	3460								
CONTRIB-POLICEMAN'S BE	3461								
CONTRIB-SENIOR FARE	3463								
CONTRIB-SENIOR PROM	3464								
CONTRIB-OTHER	3469	833			6,667			10,000	10,000
CONTRIBUTIONS-PRIVAT		**833**			**6,667**			**10,000**	**10,000**
MISCELLANEOUS		**8,366**	**32,969**	**394%**	**66,933**	**53,139**	**79%**	**100,400**	**47,261**
TRANSFERS	380A								
TRANSFERS FROM OTHR FND	3800								
T/F GENERAL FUND	3800 01	175,186			1,401,489	1,200,000	85%	2,102,234	902,234

		CITY OF HATTIESBURG							. 8
002002 - PKS/REC FUND REVENUES		REVENUE REPORT							6/3/13
		8 MONTHS ENDING 05/31/13							
		.....CURRENT.....			.....YEAR-TO-DATE.....			ANNUAL	UNREALIZED
	OBJ/SUB	ESTIMATED	ACTUAL	%REV	ESTIMATED	ACTUAL	%REV	ESTIMATE	BALANCE
T/F TAX COLLECTORS-GPT	3800 27	66,666	20,616	30%	533,333	730,012	136%	800,000	69,988
	----------	----------	---------	----	----------	---------	----	----------	----------
TRANSFERS FROM OTHR		**241,852**	**20,616**	**8%**	**1,934,823**	**1,930,012**	**99%**	**2,902,234**	**972,222**
	----------	----------	---------	----	----------	---------	----	----------	----------
TRANSFERS		**241,852**	**20,616**	**8%**	**1,934,823**	**1,930,012**	**99%**	**2,902,234**	**972,222**
NON-REVENUE RECEIPTS	390A								
SALE OF EQUIPMENT	3940								
SALE OF MISC. ITEMS	3945								
COMM.-HOT DIGGITY CONCE	3963								
VENDING COMM./REFUNDS	3964								
REFUND & RECOVERY	3965								
RECOVERY OF DAMAGE CLAI	3967	15,794			126,352	146,327	115%	189,528	43,201
	----------	----------	---------	----	----------	---------	----	----------	----------
NON-REVENUE RECEIPTS		**15,794**			**126,352**	**146,327**	**115%**	**189,528**	**43,201**
BEGINNING CASH BALANCE	399A								
APPROPRIABLE FUND BALAN	3999	16,953			135,624			203,436	203,436
	----------	----------	---------	----	----------	---------	----	----------	----------
BEGINNING CASH BALANC		**16,953**			**135,624**			**203,436**	**203,436**
	----------	----------	---------	----	----------	---------	----	----------	----------
REVENUES		**289,883**	**55,750**	**19%**	**2,319,067**	**2,152,838**	**92%**	**3,478,601**	**1,325,763**

		CITY OF HATTIESBURG							. 11
004004 - LIBRARY FUND REVENUES		REVENUE REPORT							6/3/13
		8 MONTHS ENDING 05/31/13							
		.....CURRENT.....			.....YEAR-TO-DATE.....			ANNUAL	UNREALIZED
	OBJ/SUB	ESTIMATED	ACTUAL	%REV	ESTIMATED	ACTUAL	%REV	ESTIMATE	BALANCE
REVENUES	200								
TRANSFERS	380A								
TRANSFERS FROM OTHR FND	3800								
T/F TAX COLLECTORS-GPT	3800 27		20,078			710,983			(710,983)
	----------	----------	---------	----	----------	---------	----	----------	----------
TRANSFERS FROM OTHR			**20,078**			**710,983**			**(710,983)**
	----------	----------	---------	----	----------	---------	----	----------	----------
TRANSFERS			**20,078**			**710,983**			**(710,983)**
	----------	----------	---------	----	----------	---------	----	----------	----------
REVENUES			**20,078**			**710,983**			**(710,983)**

		CITY OF HATTIESBURG							. 12
005005 - H.M.F.P.FUND REVENUES		REVENUE REPORT							6/3/13
		8 MONTHS ENDING 05/31/13							
		.....CURRENT.....			.....YEAR-TO-DATE.....			ANNUAL	UNREALIZED
	OBJ/SUB	ESTIMATED	ACTUAL	%REV	ESTIMATED	ACTUAL	%REV	ESTIMATE	BALANCE
REVENUES	200								
INTER-GOVERNMNTL REVENUE	230A								
STATE-SHARED REVENUE	260B								
PRO-RATA FIRE INS. PREM	2620	19,583			156,667			235,000	235,000
FIRE INS REBATE/CODE EN	2625								
	----------	----------	---------	----	----------	---------	----	----------	----------
STATE-SHARED REVENUE		**19,583**			**156,667**			**235,000**	**235,000**
CHARGES FOR SERVICES	280A								
PUBLIC SAFETY	2850								
FIRE PROT.SHARE-USM	2862	7,971			63,768	95,652	150%	95,652	
HAZ.MAT.TRAINING FEES	2885								
	----------	----------	---------	----	----------	---------	----	----------	----------
PUBLIC SAFETY		**7,971**			**63,768**	**95,652**	**150%**	**95,652**	
	----------	----------	---------	----	----------	---------	----	----------	----------
CHARGES FOR SERVICES		**7,971**			**63,768**	**95,652**	**150%**	**95,652**	
FINES AND FORFEITS	330A								
FIRE CODE VIOLATIONS	3325	125	252	201%	1,000	1,854	185%	1,500	(354)
	----------	----------	---------	----	----------	---------	----	----------	----------
FINES AND FORFEITS		**125**	**252**	**201%**	**1,000**	**1,854**	**185%**	**1,500**	**(354)**
MISCELLANEOUS	340A								
INTEREST EARNINGS	3400								
CERTIFICATES OF DEPOSI	3402								
SAVINGS ACCOUNT/MMA	3405	458	316	68%	3,667	2,812	76%	5,500	2,688
	----------	----------	---------	----	----------	---------	----	----------	----------
INTEREST EARNINGS		**458**	**316**	**68%**	**3,667**	**2,812**	**76%**	**5,500**	**2,688**
CONTRIBUTIONS-PRIVATE	3460								
CONTRIB-OTHER	3469	416			3,333	575	17%	5,000	4,425
	----------	----------	---------	----	----------	---------	----	----------	----------
CONTRIBUTIONS-PRIVAT		**416**			**3,333**	**575**	**17%**	**5,000**	**4,425**
	----------	----------	---------	----	----------	---------	----	----------	----------
MISCELLANEOUS		**875**	**316**	**36%**	**7,000**	**3,387**	**48%**	**10,500**	**7,113**
TRANSFERS	380A								
TRANSFERS FROM OTHR FND	3800								
T/F GENERAL FUND	3800 01								
	----------	----------	---------	----	----------	---------	----	----------	----------
TRANSFERS FROM OTHR									
	----------	----------	---------	----	----------	---------	----	----------	----------

		CITY OF HATTIESBURG							. 12
005005 - H.M.F.P.FUND REVENUES		REVENUE REPORT							6/3/13
		8 MONTHS ENDING 05/31/13							
		.....CURRENT.....			.....YEAR-TO-DATE.....			ANNUAL	UNREALIZED
	OBJ/SUB	ESTIMATED	ACTUAL	%REV	ESTIMATED	ACTUAL	%REV	ESTIMATE	BALANCE
TRANSFERS									
NON-REVENUE RECEIPTS	390A								
SALE OF REAL ESTATE	3920								
SALE OF EQUIPMENT	3940								
INSURANCE REIMB-STORM	3962								
REFUND & RECOVERY	3965								
CAPITAL LEASE PROCEEDS	3970								
NOTE PROCEEDS	3975								
FIRE STATION	3975 03								
	----------	----------	---------	----	----------	---------	----	----------	----------
NOTE PROCEEDS									
	----------	----------	---------	----	----------	---------	----	----------	----------
NON-REVENUE RECEIPTS									
BEGINNING CASH BALANCE	399A								
APPROPRIABLE FUND BALAN	3999	63,674			509,398			764,097	764,097
	----------	----------	---------	----	----------	---------	----	----------	----------
BEGINNING CASH BALANC		**63,674**			**509,398**			**764,097**	**764,097**
	----------	----------	---------	----	----------	---------	----	----------	----------
REVENUES		**92,229**	**568**		**737,833**	**100,894**	**13%**	**1,106,749**	**1,005,855**

		CITY OF HATTIESBURG							. 14
008008 - SPEC.ST.IMPR REVENUES		REVENUE REPORT							6/3/13
		8 MONTHS ENDING 05/31/13							
		.....CURRENT.....			.....YEAR-TO-DATE.....			ANNUAL	UNREALIZED
	OBJ/SUB	ESTIMATED	ACTUAL	%REV	ESTIMATED	ACTUAL	%REV	ESTIMATE	BALANCE
REVENUES	200								
INTER-GOVERNMNTL REVENUE	230A								
FEDERAL GRANTS	230B								
FAUS GRANT(LINC#1)	2331								
FAUS GRANT(LINC#2)	2332								
FAUS GRANT(CLASSIC DR)	2334								
FAUS GRANT(S.28TH)	2335								
FAUS GRANT(LINC#4)	2336								
	----------	----------	---------	----	----------	---------	----	----------	----------
FEDERAL GRANTS									
STATE-SHARED REVENUE	260B								
MUNICIPAL AID	2650	4,583			36,667	41,758	113%	55,000	13,242
	----------	----------	---------	----	----------	---------	----	----------	----------
STATE-SHARED REVENUE		**4,583**			**36,667**	**41,758**	**113%**	**55,000**	**13,242**
MISCELLANEOUS	340A								
INTEREST EARNINGS	3400								
CERTIFICATES OF DEPOSI	3402								
SAVINGS ACCOUNT/MMA	3405	83	110	132%	667	845	126%	1,000	155
	----------	----------	---------	----	----------	---------	----	----------	----------
INTEREST EARNINGS		**83**	**110**	**132%**	**667**	**845**	**126%**	**1,000**	**155**
CONTRIBUTIONS-PUBLIC	3450								
CONTRIB-USM-CLASSIC DR	3452								
CONTRIBUTIONS-FORREST	3455								
	----------	----------	---------	----	----------	---------	----	----------	----------
CONTRIBUTIONS-PUBLIC									
	----------	----------	---------	----	----------	---------	----	----------	----------
MISCELLANEOUS		**83**	**110**	**132%**	**667**	**845**	**126%**	**1,000**	**155**
TRANSFERS	380A								
TRANSFERS FROM OTHR FND	3800								
T/F GENERAL FUND	3800 01								
T/F '99 TAX INCR CONST	3800 103								
T/F '93 STREETS,DRAINS	3800 110								
T/F MUN.ROAD & BRIDGE	3800 72								
T/F '92 PARKS,REC,STS.	3800 97								
	----------	----------	---------	----	----------	---------	----	----------	----------
TRANSFERS FROM OTHR									
	----------	----------	---------	----	----------	---------	----	----------	----------

		CITY OF HATTIESBURG							. 14
008008 - SPEC.ST.IMPR REVENUES		REVENUE REPORT							6/3/13
		8 MONTHS ENDING 05/31/13							
		.....CURRENT.....			.....YEAR-TO-DATE.....			ANNUAL	UNREALIZED
	OBJ/SUB	ESTIMATED	ACTUAL	%REV	ESTIMATED	ACTUAL	%REV	ESTIMATE	BALANCE
TRANSFERS									
NON-REVENUE RECEIPTS	390A								
REFUND & RECOVERY	3965								
TIF DEPOSIT/PROCEEDS	3971								
	----------	----------	---------	----	----------	---------	----	----------	----------
NON-REVENUE RECEIPTS									
BEGINNING CASH BALANCE	399A								
APPROPRIABLE FUND BALAN	3999	17,158			137,269			205,903	205,903
	----------	----------	---------	----	----------	---------	----	----------	----------
BEGINNING CASH BALANC		**17,158**			**137,269**			**205,903**	**205,903**
	----------	----------	---------	----	----------	---------	----	----------	----------
REVENUES		**21,825**	**110**		**174,602**	**42,603**	**24%**	**261,903**	**219,300**

		CITY OF HATTIESBURG							. 16
009009 - W&S O&M REVENUES		REVENUE REPORT							6/3/13
		8 MONTHS ENDING 05/31/13							
		.....CURRENT.....			.....YEAR-TO-DATE.....			ANNUAL	UNREALIZED
	OBJ/SUB	ESTIMATED	ACTUAL	%REV	ESTIMATED	ACTUAL	%REV	ESTIMATE	BALANCE
REVENUES	200								
INTER-GOVERNMNTL REVENUE	230A								
FEDERAL GRANTS	230B								
CHARGES FOR SERVICES	280A								
SANITATION	2950								
LAGOON DUMPING	2955	1,666	2,005	120%	13,333	18,905	141%	20,000	1,095
	----------	----------	---------	----	----------	---------	----	----------	----------
SANITATION		**1,666**	**2,005**	**120%**	**13,333**	**18,905**	**141%**	**20,000**	**1,095**
	----------	----------	---------	----	----------	---------	----	----------	----------
CHARGES FOR SERVICES		**1,666**	**2,005**	**120%**	**13,333**	**18,905**	**141%**	**20,000**	**1,095**
MISCELLANEOUS	340A								
INTEREST EARNINGS	3400								
CERTIFICATES OF DEPOSI	3402								
SAVINGS ACCOUNT/MMA	3405	250	182	72%	2,000	1,559	77%	3,000	1,442
OTHER INTEREST-MMA	3407								
	----------	----------	---------	----	----------	---------	----	----------	----------
INTEREST EARNINGS		**250**	**182**	**72%**	**2,000**	**1,559**	**77%**	**3,000**	**1,442**
RENTS AND ROYALTIES	3410								
EQUIPMENT	3419								
	----------	----------	---------	----	----------	---------	----	----------	----------
RENTS AND ROYALTIES									
	----------	----------	---------	----	----------	---------	----	----------	----------
MISCELLANEOUS		**250**	**182**	**72%**	**2,000**	**1,559**	**77%**	**3,000**	**1,442**
ENTERPRISE ACCOUNTS	360A								
TAPS	3610								
SEWERAGE TREATMENT	3720								
METER RELOCATION	3730								
MISCELLANEOUS	3790								
	----------	----------	---------	----	----------	---------	----	----------	----------
ENTERPRISE ACCOUNTS									
TRANSFERS	380A								
TRANSFERS FROM OTHR FND	3800								
T/F WATER & SEWER B&I	3800 10								
T/F WATER & SEWER	3800 11	664,357	664,358	100%	5,314,863	5,314,864	100%	7,972,295	2,657,431
T/F CUSTOMER METER	3800 24								
	----------	----------	---------	----	----------	---------	----	----------	----------
TRANSFERS FROM OTHR		**664,357**	**664,358**	**100%**	**5,314,863**	**5,314,864**	**100%**	**7,972,295**	**2,657,431**

		CITY OF HATTIESBURG							. 16
009009 - W&S O&M REVENUES		REVENUE REPORT							6/3/13
		8 MONTHS ENDING 05/31/13							
		.....CURRENT.....			.....YEAR-TO-DATE.....			ANNUAL	UNREALIZED
	OBJ/SUB	ESTIMATED	ACTUAL	%REV	ESTIMATED	ACTUAL	%REV	ESTIMATE	BALANCE
	---	---	---	---	---	---	---	---	---
TRANSFERS		**664,357**	**664,358**	**100%**	**5,314,863**	**5,314,864**	**100%**	**7,972,295**	**2,657,431**
NON-REVENUE RECEIPTS	390A								
SALE OF EQUIPMENT	3940								
SALE OF SCRAP MATERIAL	3943					1,769			(1,769)
SALE OF MISC. ITEMS	3945								
REFUND & RECOVERY	3965					126			(126)
RECOVERY OF DAMAGE CLAI	3967								
CAPITAL LEASE PROCEEDS	3970								
	---	---	---	---	---	---	---	---	---
NON-REVENUE RECEIPTS						**1,895**			**(1,895)**
BEGINNING CASH BALANCE	399A								
APPROPRIABLE FUND BALAN	3999	63,366			506,934			760,401	760,401
	---	---	---	---	---	---	---	---	---
BEGINNING CASH BALANC		**63,366**			**506,934**			**760,401**	**760,401**
	---	---	---	---	---	---	---	---	---
REVENUES		**729,641**	**666,545**	**91%**	**5,837,131**	**5,337,222**	**91%**	**8,755,696**	**3,418,474**

		CITY OF HATTIESBURG							. 18
010010 - W&S B&I REVENUES		REVENUE REPORT							6/3/13
		8 MONTHS ENDING 05/31/13							
		.....CURRENT.....			.....YEAR-TO-DATE.....			ANNUAL	UNREALIZED
	OBJ/SUB	ESTIMATED	ACTUAL	%REV	ESTIMATED	ACTUAL	%REV	ESTIMATE	BALANCE
REVENUES	200								
MISCELLANEOUS	340A								
INTEREST EARNINGS	3400								
CERTIFICATES OF DEPOSI	3402								
SAVINGS ACCOUNT/MMA	3405		32			384			(384)
OTHER INTEREST-MMA	3407		10			80			(80)
TREASURY NOTES	3409								
	---	---	---	---	---	---	---	---	---
INTEREST EARNINGS			**42**			**464**			**(464)**
	---	---	---	---	---	---	---	---	---
MISCELLANEOUS			**42**			**464**			**(464)**
TRANSFERS	380A								
TRANSFERS FROM OTHR FND	3800								
T/F '06 W&S BOND CONST	3800 105								
T/F WATER & SEWER	3800 11								
T/F WATER & SEWER '06	3800 11A	158,558	158,558	100%	1,268,467	1,268,467	100%	1,902,700	634,233
T/F WATER & SEWER '12	3800 11B	73,480	73,480	100%	587,840	587,840	100%	881,760	293,920
T/F WTR/SWR(METER GO)	3800 11M	75,000	75,000	100%	600,000	600,000	100%	900,000	300,000
T/F W & S CONTINGENCY	3800 17								
T/F '12 W&S REV BOND C	3800 94								
	---	---	---	---	---	---	---	---	---
TRANSFERS FROM OTHR		**307,038**	**307,038**	**100%**	**2,456,307**	**2,456,307**	**100%**	**3,684,460**	**1,228,153**
	---	---	---	---	---	---	---	---	---
TRANSFERS		**307,038**	**307,038**	**100%**	**2,456,307**	**2,456,307**	**100%**	**3,684,460**	**1,228,153**
NON-REVENUE RECEIPTS	390A								
SALE OF BONDS	3910								
BOND PREMIUM	3913								
ACCRUED INTEREST	3915								
	---	---	---	---	---	---	---	---	---
SALE OF BONDS									
	---	---	---	---	---	---	---	---	---
NON-REVENUE RECEIPTS									
BEGINNING CASH BALANCE	399A								
APPROPRIABLE FUND BALAN	3999	137,670			1,101,360			1,652,040	1,652,040
	---	---	---	---	---	---	---	---	---
BEGINNING CASH BALANC		**137,670**			**1,101,360**			**1,652,040**	**1,652,040**
	---	---	---	---	---	---	---	---	---

		CITY OF HATTIESBURG							. 18
010010 - W&S B&I REVENUES		REVENUE REPORT							6/3/13
		8 MONTHS ENDING 05/31/13							
		.....CURRENT.....			.....YEAR-TO-DATE.....			ANNUAL	UNREALIZED
	OBJ/SUB	ESTIMATED	ACTUAL	%REV	ESTIMATED	ACTUAL	%REV	ESTIMATE	BALANCE
REVENUES		**444,708**	**307,081**	**69%**	**3,557,667**	**2,456,770**	**69%**	**5,336,500**	**2,879,730**

		CITY OF HATTIESBURG							. 19
011011 - WATER & SEWER REVENUES		REVENUE REPORT							6/3/13
		8 MONTHS ENDING 05/31/13							
		.....CURRENT.....			.....YEAR-TO-DATE.....			ANNUAL	UNREALIZED
	OBJ/SUB	ESTIMATED	ACTUAL	%REV	ESTIMATED	ACTUAL	%REV	ESTIMATE	BALANCE
REVENUES	200								
LICENSES, PERMITS & FEES	220A								
OTHER PERMITS & FEES	2230								
NSF CHECK FEE	2290	416	520	125%	3,333	2,600	78%	5,000	2,400
OTHER PERMITS & FEES		**416**	**520**	**125%**	**3,333**	**2,600**	**78%**	**5,000**	**2,400**
LICENSES, PERMITS & F		**416**	**520**	**125%**	**3,333**	**2,600**	**78%**	**5,000**	**2,400**
MISCELLANEOUS	340A								
INTEREST EARNINGS	3400								
CERTIFICATES OF DEPOSI	3402								
SAVINGS ACCOUNT/MMA	3405	208	191	91%	1,667	1,790	107%	2,500	710
INTEREST EARNINGS		**208**	**191**	**91%**	**1,667**	**1,790**	**107%**	**2,500**	**710**
MISCELLANEOUS		**208**	**191**	**91%**	**1,667**	**1,790**	**107%**	**2,500**	**710**
ENTERPRISE ACCOUNTS	360A								
METERED WATER SALES	3600								
RESIDENTIAL WATER-NO T	3600 01	295,333	300,789	101%	2,362,667	2,462,594	104%	3,544,000	1,081,406
NON-RESIDENTIAL WATER	3600 011	65,416	77,714	118%	523,333	578,068	110%	785,000	206,932
TAXABLE WATER SALES	3600 02	165,750	175,076	105%	1,326,000	1,325,878	99%	1,989,000	663,122
TAXABLE WATER-USA YEAS	3600 03	146,416	18,645	12%	1,171,333	178,600	15%	1,757,000	1,578,400
METERED WATER SALES		**672,916**	**572,224**	**85%**	**5,383,333**	**4,545,140**	**84%**	**8,075,000**	**3,529,860**
WATER TAPS	3610	9,583	950	9%	76,667	157,272	205%	115,000	(42,272)
WATER TURN-ON FEE	3620	5,333	5,770	108%	42,667	47,910	112%	64,000	16,090
SEWER TAPS	3625	1,250			10,000	6,405	64%	15,000	8,595
SEWER CHARGES	3630								
NON-RESIDENTIAL SEWER	3630 01	141,666	181,481	128%	1,133,333	1,373,388	121%	1,700,000	326,612
RESIDENTIAL SEWER	3630 02	266,666	305,744	114%	2,133,333	2,437,481	114%	3,200,000	762,519
LAMAR PARK SEWER	3630 03	16,250	17,665	108%	130,000	126,929	97%	195,000	68,071
MARSHALL DURBIN SEWER	3630 04	30,833			246,667	154,688	62%	370,000	215,312
PETAL SEWER	3630 05	25,000	30,338	121%	200,000	297,634	148%	300,000	2,366
HERCULES	3630 06	500	399	79%	4,000	6,822	170%	6,000	(822)
PBRSWMA-LEACHATE	3630 07	333	363	109%	2,667	3,532	132%	4,000	468
ZEON CHEMICALS	3630 08	3,166	2,848	89%	25,333	19,794	78%	38,000	18,206
USA YEAST SEWER	3630 09	51,250	55,197	107%	410,000	400,556	97%	615,000	214,444

		CITY OF HATTIESBURG							. 19
011011 - WATER & SEWER REVENUES		REVENUE REPORT							6/3/13
		8 MONTHS ENDING 05/31/13							
		.....CURRENT.....			.....YEAR-TO-DATE.....			ANNUAL	UNREALIZED
	OBJ/SUB	ESTIMATED	ACTUAL	%REV	ESTIMATED	ACTUAL	%REV	ESTIMATE	BALANCE
DAIRY FRESH SEWER	3630 10	5,166	6,310	122%	41,333	56,754	137%	62,000	5,246
OTHER SPEC SWR CONTRAC	3630 11		6,758			69,172			(69,172)
SEWER CHARGES		**540,833**	**607,104**	**112%**	**4,326,667**	**4,946,749**	**114%**	**6,490,000**	**1,543,251**
SEWERAGE TREATMENT	3720								
ENTERPRISE ACCOUNTS		**1,229,916**	**1,186,048**	**96%**	**9,839,333**	**9,703,477**	**98%**	**14,759,000**	**5,055,523**
NON-REVENUE RECEIPTS	390A								
REFUND & RECOVERY	3965								
NON-REVENUE RECEIPTS									
BEGINNING CASH BALANCE	399A								
APPROPRIABLE FUND BALAN	3999								
BEGINNING CASH BALANC									
REVENUES		**1,230,541**	**1,186,760**	**96%**	**9,844,333**	**9,707,867**	**98%**	**14,766,500**	**5,058,633**

		CITY OF HATTIESBURG							. 21
012012 - 1999 TAX INCRE B&I-REVENUES		REVENUE REPORT							6/3/13
		8 MONTHS ENDING 05/31/13							
		.....CURRENT.....			.....YEAR-TO-DATE.....			ANNUAL	UNREALIZED
	OBJ/SUB	ESTIMATED	ACTUAL	%REV	ESTIMATED	ACTUAL	%REV	ESTIMATE	BALANCE
REVENUES	200								
INTER-GOVERNMNTL REVENUE	230A								
CITY/COUNTY-SHARED REVEN	270B								
FORREST CTY	2705								
	----------	----------	--------	----	----------	--------	----	----------	----------
CITY/COUNTY-SHARED RE									
MISCELLANEOUS	340A								
INTEREST EARNINGS	3400								
CERTIFICATES OF DEPOSI	3402								
SAVINGS ACCOUNT/MMA	3405		1			18			(18)
OTHER INTEREST	3407								
TREASURY NOTES	3409								
	----------	----------	--------	----	----------	--------	----	----------	----------
INTEREST EARNINGS			**1**			**18**			**(18)**
	----------	----------	--------	----	----------	--------	----	----------	----------
MISCELLANEOUS			**1**			**18**			**(18)**
TRANSFERS	380A								
TRANSFERS FROM OTHR FND	3800								
T/F '99 TAX INCRE CONS	3800 103								
T/F TAX COLLECTORS-GPT	3800 27	5,515			44,125	68,300	154%	66,188	(2,112)
	----------	----------	--------	----	----------	--------	----	----------	----------
TRANSFERS FROM OTHR		**5,515**			**44,125**	**68,300**	**154%**	**66,188**	**(2,112)**
	----------	----------	--------	----	----------	--------	----	----------	----------
TRANSFERS		**5,515**			**44,125**	**68,300**	**154%**	**66,188**	**(2,112)**
NON-REVENUE RECEIPTS	390A								
REFUND & RECOVERY	3965								
	----------	----------	--------	----	----------	--------	----	----------	----------
NON-REVENUE RECEIPTS									
BEGINNING CASH BALANCE	399A								
APPROPRIABLE FUND BALAN	3999	6,014			48,117			72,175	72,175
	----------	----------	--------	----	----------	--------	----	----------	----------
BEGINNING CASH BALANC		**6,014**			**48,117**			**72,175**	**72,175**
	----------	----------	--------	----	----------	--------	----	----------	----------
REVENUES		**11,530**	**1**		**92,242**	**68,318**	**74%**	**138,363**	**70,045**

		CITY OF HATTIESBURG							. 22
013013 - CITY B&I REVENUES		REVENUE REPORT							6/3/13
		8 MONTHS ENDING 05/31/13							
		.....CURRENT.....			.....YEAR-TO-DATE.....			ANNUAL	UNREALIZED
	OBJ/SUB	ESTIMATED	ACTUAL	%REV	ESTIMATED	ACTUAL	%REV	ESTIMATE	BALANCE
REVENUES	200								
INTER-GOVERNMNTL REVENUE	230A								
CITY/COUNTY-SHARED REVEN	270B								
PROPERTY TAX DISTR-SUNB	2728								
KOHLER DEBT.SER-FORREST	2730	5,301			42,411	63,617	150%	63,617	
CITY/COUNTY-SHARED RE		**5,301**			**42,411**	**63,617**	**150%**	**63,617**	
MISCELLANEOUS	340A								
INTEREST EARNINGS	3400								
CERTIFICATES OF DEPOSI	3402								
SAVINGS ACCOUNT/MMA	3405	166	178	107%	1,333	1,149	86%	2,000	851
OTHER INTEREST-MMA	3407								
TREASURY NOTES	3409								
INTEREST EARNINGS		**166**	**178**	**107%**	**1,333**	**1,149**	**86%**	**2,000**	**851**
RENTS AND ROYALTIES	3410								
BUILDING	3412								
KOHLER	3412 17								
ABILITYWORKS INC(ALLI	3412 19								
OTHER BLDG. RENT	3412 99								
BUILDING									
RENTS AND ROYALTIES									
MISCELLANEOUS		**166**	**178**	**107%**	**1,333**	**1,149**	**86%**	**2,000**	**851**
TRANSFERS	380A								
TRANSFERS FROM OTHR FND	3800								
T/F GENERAL FUND	3800 01								
T/F SPEC.SALES TAX	3800 107	10,426	10,427	100%	83,413	83,416	100%	125,119	41,703
T/F TAX COLLECTORS-GPT	3800 27	233,333	72,117	30%	1,866,667	2,554,797	136%	2,800,000	245,203
T/F INDUSTRIAL PARK DE	3800 87								
T/F IND.PARK (KOHLER)	3800 87K	22,850			182,807			274,211	274,211
T/F IND.PARK (SUNBEAM)	3800 87S								
T/F D/T LIGHTING	3800 90								
TRANSFERS FROM OTHR		**266,610**	**82,544**	**30%**	**2,132,887**	**2,638,213**	**123%**	**3,199,330**	**561,117**

		CITY OF HATTIESBURG							. 22
013013 - CITY B&I REVENUES		REVENUE REPORT							6/3/13
		8 MONTHS ENDING 05/31/13							
		.....CURRENT.....			.....YEAR-TO-DATE.....			ANNUAL	UNREALIZED
	OBJ/SUB	ESTIMATED	ACTUAL	%REV	ESTIMATED	ACTUAL	%REV	ESTIMATE	BALANCE
TRANSFERS		**266,610**	**82,544**	**30%**	**2,132,887**	**2,638,213**	**123%**	**3,199,330**	**561,117**
NON-REVENUE RECEIPTS	390A								
SALE OF BONDS	3910								
ACCRUED INT-RFDG BONDS	3915								
SALE OF BONDS									
SALE OF REAL ESTATE-SAC	3920	18,237			145,900	63,660	43%	218,850	155,190
REFUND & RECOVERY	3965								
NON-REVENUE RECEIPTS		**18,237**			**145,900**	**63,660**	**43%**	**218,850**	**155,190**
BEGINNING CASH BALANCE	399A								
APPROPRIABLE FUND BALAN	3999	253,336			2,026,691			3,040,036	3,040,036
BEGINNING CASH BALANC		**253,336**			**2,026,691**			**3,040,036**	**3,040,036**
REVENUES		**543,652**	**82,722**	**15%**	**4,349,222**	**2,766,640**	**63%**	**6,523,833**	**3,757,193**

		CITY OF HATTIESBURG							. 24
014014 - SCHOOL FUNDREVENUES		REVENUE REPORT							6/3/13
		8 MONTHS ENDING 05/31/13							
		.....CURRENT.....			.....YEAR-TO-DATE.....			ANNUAL	UNREALIZED
	OBJ/SUB	ESTIMATED	ACTUAL	%REV	ESTIMATED	ACTUAL	%REV	ESTIMATE	BALANCE
REVENUES	200								
TRANSFERS	380A								
TRANSFERS FROM OTHR FND	3800								
T/F TAX COLLECTORS-GPT	3800 27		328,298			14,863,322			(14,863,322)
T/F TAX COLL-GPT-'88 B	3800 27SB		43,761			2,002,117			(2,002,117)
	----------	----------	---------	----	----------	---------	----	----------	----------
TRANSFERS FROM OTHR			**372,059**			**16,865,439**			**(16,865,439)**
	----------	----------	---------	----	----------	---------	----	----------	----------
TRANSFERS			**372,059**			**16,865,439**			**(16,865,439)**
	----------	----------	---------	----	----------	---------	----	----------	----------
REVENUES			**372,059**			**16,865,439**			**(16,865,439)**

		CITY OF HATTIESBURG							. 25
015015 - W&S B&I USAYEAST REVENUES		REVENUE REPORT							6/3/13
		8 MONTHS ENDING 05/31/13							
		.....CURRENT.....			.....YEAR-TO-DATE.....			ANNUAL	UNREALIZED
	OBJ/SUB	ESTIMATED	ACTUAL	%REV	ESTIMATED	ACTUAL	%REV	ESTIMATE	BALANCE
REVENUES	200								
MISCELLANEOUS	340A								
INTEREST EARNINGS	3400								
CERTIFICATES OF DEPOSI	3402								
SAVINGS ACCOUNT/MMA	3405	16	23	143%	133	128	96%	200	72
OTHER INTEREST-MMA	3407								
TREASURY NOTES	3409								
INTEREST EARNINGS		**16**	**23**	**143%**	**133**	**128**	**96%**	**200**	**72**
MISCELLANEOUS		**16**	**23**	**143%**	**133**	**128**	**96%**	**200**	**72**
TRANSFERS	380A								
TRANSFERS FROM OTHR FND	3800								
T/F 2002 USA YEAST PRO	3800 106								
T/F WATER & SEWER	3800 11	25,833	25,833	100%	206,667	206,667	100%	310,000	103,333
TRANSFERS FROM OTHR		**25,833**	**25,833**	**100%**	**206,667**	**206,667**	**100%**	**310,000**	**103,333**
TRANSFERS		**25,833**	**25,833**	**100%**	**206,667**	**206,667**	**100%**	**310,000**	**103,333**
NON-REVENUE RECEIPTS	390A								
SALE OF BONDS	3910								
BOND PREMIUM	3913								
ACCRUED INT-'02 W&S BO	3915								
SALE OF BONDS									
REFUND & RECOVERY	3965								
NON-REVENUE RECEIPTS									
BEGINNING CASH BALANCE	399A								
APPROPRIABLE FUND BALAN	3999	11,820			94,561			141,841	141,841
BEGINNING CASH BALANC		**11,820**			**94,561**			**141,841**	**141,841**
REVENUES		**37,670**	**25,856**	**68%**	**301,361**	**206,794**	**68%**	**452,041**	**245,247**

		CITY OF HATTIESBURG							. 26
017017 - W&S CONTINGENCY REVENUES		REVENUE REPORT							6/3/13
		8 MONTHS ENDING 05/31/13							
		.....CURRENT.....			.....YEAR-TO-DATE.....			ANNUAL	UNREALIZED
	OBJ/SUB	ESTIMATED	ACTUAL	%REV	ESTIMATED	ACTUAL	%REV	ESTIMATE	BALANCE
REVENUES	200								
MISCELLANEOUS	340A								
INTEREST EARNINGS	3400								
CERTIFICATES OF DEPOSI	3402								
SAVINGS ACCOUNT/MMA	3405								
TREASURY NOTES	3409								
	----------	----------	---------	----	----------	---------	----	----------	----------
INTEREST EARNINGS									
	----------	----------	---------	----	----------	---------	----	----------	----------
MISCELLANEOUS									
TRANSFERS	380A								
TRANSFERS FROM OTHR FND	3800								
T/F WATER & SEWER	3800 11								
	----------	----------	---------	----	----------	---------	----	----------	----------
TRANSFERS FROM OTHR									
	----------	----------	---------	----	----------	---------	----	----------	----------
TRANSFERS									
BEGINNING CASH BALANCE	399A								
APPROPRIABLE FUND BALAN	3999								
	----------	----------	---------	----	----------	---------	----	----------	----------
BEGINNING CASH BALANC									
	----------	----------	---------	----	----------	---------	----	----------	----------
REVENUES									

		CITY OF HATTIESBURG							. 27
018018 - P&FD&R REVENUES		REVENUE REPORT							6/3/13
		8 MONTHS ENDING 05/31/13							
		.....CURRENT.....			.....YEAR-TO-DATE.....			ANNUAL	UNREALIZED
	OBJ/SUB	ESTIMATED	ACTUAL	%REV	ESTIMATED	ACTUAL	%REV	ESTIMATE	BALANCE
REVENUES	200								
MISCELLANEOUS	340A								
INTEREST EARNINGS	3400								
SAVINGS ACCOUNT/MMA	3405								
INTEREST EARNINGS									
P&FD&R EMPLOYEE CONTRIB	3470		1,216			10,321			(10,321)
MISCELLANEOUS			**1,216**			**10,321**			**(10,321)**
TRANSFERS	380A								
TRANSFERS FROM OTHR FND	3800								
T/F TAX COLLECTORS-GPT	3800 27		39,449			1,404,036			(1,404,036)
TRANSFERS FROM OTHR			**39,449**			**1,404,036**			**(1,404,036)**
TRANSFERS			**39,449**			**1,404,036**			**(1,404,036)**
NON-REVENUE RECEIPTS	390A								
REFUND & RECOVERY	3965								
NON-REVENUE RECEIPTS									
BEGINNING CASH BALANCE	399A								
APPROPRIABLE FUND BALAN	3999								
BEGINNING CASH BALANC									
REVENUES			**40,665**			**1,414,357**			**(1,414,357)**

		CITY OF HATTIESBURG							. 28
019019 - POL.FORFEITURES REVENUES		REVENUE REPORT							6/3/13
		8 MONTHS ENDING 05/31/13							
		.....CURRENT.....			.....YEAR-TO-DATE.....			ANNUAL	UNREALIZED
	OBJ/SUB	ESTIMATED	ACTUAL	%REV	ESTIMATED	ACTUAL	%REV	ESTIMATE	BALANCE
REVENUES	200								
INTER-GOVERNMNTL REVENUE	230A								
FEDERAL GRANTS	230B								
JUST.-TREAS(ATF)	2306								
JUST.-HURRICANE RELIEF(	2308								
	----------	----------	---------	----	----------	---------	----	----------	----------
FEDERAL GRANTS									
STATE GRANTS	250B								
CRIME PREVENTION PROGRA	2516								
PR VOTECH TRAINING	2517								
ATT'Y GEN./TOBACCO REVE	2525								
	----------	----------	---------	----	----------	---------	----	----------	----------
STATE GRANTS									
CHARGES FOR SERVICES	280A								
PUBLIC SAFETY	2850								
K-9 TRAINING	2872								
BAD CHECK PROC. FEES	2875	183	251	137%	1,467	5,751	392%	2,200	(3,551)
DISPATCHER TRNG. FEES	2890					2,700			(2,700)
SWORN TRNG FEES	2891								
NON-SWORN TRNG FEES	2892								
METRO CRIME SCENE FEES	2895								
METRO CRIME SCENE-LAM	2895 01								
METRO CRIME SCENE-PET	2895 02								
METRO CRIME SCENE-FOR	2895 03								
	----------	----------	---------	----	----------	---------	----	----------	----------
METRO CRIME SCENE F									
	----------	----------	---------	----	----------	---------	----	----------	----------
PUBLIC SAFETY		**183**	**251**	**137%**	**1,467**	**8,451**	**576%**	**2,200**	**(6,251)**
	----------	----------	---------	----	----------	---------	----	----------	----------
CHARGES FOR SERVICES		**183**	**251**	**137%**	**1,467**	**8,451**	**576%**	**2,200**	**(6,251)**
FINES AND FORFEITS	330A								
DARE CITY COURT COSTS	3321	951	2,177	228%	7,613	18,479	242%	11,419	(7,060)
NARC.FORFEITURES-POLICE	3323	1,684	300	17%	13,477	27,778	206%	20,216	(7,562)
FORF-FED(TREAS/IRS/ATF)	3324								
FORF-FED(JUSTICE/DEA)	3326	556			4,451	10,444	234%	6,677	(3,767)
	----------	----------	---------	----	----------	---------	----	----------	----------
FINES AND FORFEITS		**3,192**	**2,477**	**77%**	**25,541**	**56,701**	**221%**	**38,312**	**(18,389)**

		CITY OF HATTIESBURG							. 28
019019 - POL.FORFEITURES REVENUES		REVENUE REPORT							6/3/13
		8 MONTHS ENDING 05/31/13							
		.....CURRENT.....			.....YEAR-TO-DATE.....			ANNUAL	UNREALIZED
	OBJ/SUB	ESTIMATED	ACTUAL	%REV	ESTIMATED	ACTUAL	%REV	ESTIMATE	BALANCE
MISCELLANEOUS	340A								
INTEREST EARNINGS	3400								
SAVINGS ACCOUNT/MMA	3405		12			34			(34)
	----------	----------	---------	----	----------	---------	----	----------	----------
INTEREST EARNINGS			**12**			**34**			**(34)**
CONTRIBUTIONS-PUBLIC	3450								
CONTRIB-LAMAR CNTY	3451								
CONTRIB-USM	3452								
CONTRIB-PETAL	3453								
CONTRIB-METRO CRIME ST	3454								
CONTRIBUTIONS-FORREST	3455								
CONTRIBUTIONS-OTHER	3459								
	----------	----------	---------	----	----------	---------	----	----------	----------
CONTRIBUTIONS-PUBLIC									
CONTRIBUTIONS-PRIVATE	3460								
CONTRIB-D.A.R.E.	3461								
CONTRIB-OTHER	3469								
	----------	----------	---------	----	----------	---------	----	----------	----------
CONTRIBUTIONS-PRIVAT									
	----------	----------	---------	----	----------	---------	----	----------	----------
MISCELLANEOUS			**12**			**34**			**(34)**
TRANSFERS	380A								
TRANSFERS FROM OTHR FND	3800								
T/F GENERAL FUND	3800 01								
	----------	----------	---------	----	----------	---------	----	----------	----------
TRANSFERS FROM OTHR									
	----------	----------	---------	----	----------	---------	----	----------	----------
TRANSFERS									
NON-REVENUE RECEIPTS	390A								
SALE OF EQUIPMENT	3940								
SALE OF CANINES	3946								
INSURANCE REIMB-STORM	3962								
REFUND & RECOVERY	3965								
	----------	----------	---------	----	----------	---------	----	----------	----------
NON-REVENUE RECEIPTS									
BEGINNING CASH BALANCE	399A								

		CITY OF HATTIESBURG							. 28
019019 - POL.FORFEITURES REVENUES		REVENUE REPORT							6/3/13
		8 MONTHS ENDING 05/31/13							
		.....CURRENT.....			.....YEAR-TO-DATE.....			ANNUAL	UNREALIZED
	OBJ/SUB	ESTIMATED	ACTUAL	%REV	ESTIMATED	ACTUAL	%REV	ESTIMATE	BALANCE
APPROPRIABLE FUND BALAN	3999	20,599			164,797			247,196	247,196
	---	---	---	---	---	---	---	---	---
BEGINNING CASH BALANC		**20,599**			**164,797**			**247,196**	**247,196**
	---	---	---	---	---	---	---	---	---
REVENUES		**23,975**	**2,740**	**11%**	**191,805**	**65,186**	**33%**	**287,708**	**222,522**

		CITY OF HATTIESBURG							. 30
020020 - 2002 TIF B&I-S/P REVENUES		REVENUE REPORT							6/3/13
		8 MONTHS ENDING 05/31/13							
		.....CURRENT.....			.....YEAR-TO-DATE.....			ANNUAL	UNREALIZED
	OBJ/SUB	ESTIMATED	ACTUAL	%REV	ESTIMATED	ACTUAL	%REV	ESTIMATE	BALANCE
REVENUES	200								
INTER-GOVERNMNTL REVENUE	230A								
CITY/COUNTY-SHARED REVEN	270B								
FORREST CTY	2705	3,274			26,196	39,294	150%	39,294	
CITY/COUNTY-SHARED RE		**3,274**			**26,196**	**39,294**	**150%**	**39,294**	
MISCELLANEOUS	340A								
INTEREST EARNINGS	3400								
CERTIFICATES OF DEPOSI	3402								
SAVINGS ACCOUNT/MMA	3405		1			16			(16)
OTHER INTEREST	3407								
TREASURY NOTES	3409								
INTEREST EARNINGS			**1**			**16**			**(16)**
MISCELLANEOUS			**1**			**16**			**(16)**
TRANSFERS	380A								
TRANSFERS FROM OTHR FND	3800								
T/F TAX COLLECTORS-GPT	3800 27	4,181			33,454			50,181	50,181
T/F '02 TIF CONSTR-SO.	3800 88								
TRANSFERS FROM OTHR		**4,181**			**33,454**			**50,181**	**50,181**
TRANSFERS		**4,181**			**33,454**			**50,181**	**50,181**
NON-REVENUE RECEIPTS	390A								
REFUND & RECOVERY	3965								
NON-REVENUE RECEIPTS									
BEGINNING CASH BALANCE	399A								
APPROPRIABLE FUND BALAN	3999	5,393			43,149			64,724	64,724
BEGINNING CASH BALANC		**5,393**			**43,149**			**64,724**	**64,724**
REVENUES		**12,849**	**1**		**102,799**	**39,310**	**38%**	**154,199**	**114,889**

		CITY OF HATTIESBURG							. 31
021021 - 2004 TIF B&I-H/D REVENUES		REVENUE REPORT							6/3/13
		8 MONTHS ENDING 05/31/13							
		.....CURRENT.....			.....YEAR-TO-DATE.....			ANNUAL	UNREALIZED
	OBJ/SUB	ESTIMATED	ACTUAL	%REV	ESTIMATED	ACTUAL	%REV	ESTIMATE	BALANCE
REVENUES	200								
INTER-GOVERNMNTL REVENUE	230A								
CITY/COUNTY-SHARED REVEN	270B								
LAMAR CTY	2708	2,182			17,456	26,184	150%	26,184	
CITY/COUNTY-SHARED RE		**2,182**			**17,456**	**26,184**	**150%**	**26,184**	
MISCELLANEOUS	340A								
INTEREST EARNINGS	3400								
CERTIFICATES OF DEPOSI	3402								
SAVINGS ACCOUNT/MMA	3405	8	5	62%	67	52	77%	100	48
OTHER INTEREST	3407								
TREASURY NOTES	3409								
INTEREST EARNINGS		**8**	**5**	**62%**	**67**	**52**	**77%**	**100**	**48**
MISCELLANEOUS		**8**	**5**	**62%**	**67**	**52**	**77%**	**100**	**48**
TRANSFERS	380A								
TRANSFERS FROM OTHR FND	3800								
T/F TAX COLLECTORS-GPT	3800 27	4,863			38,907	57,051	146%	58,360	1,309
T/F '04 TIF CONSTR-HOM	3800 89								
TRANSFERS FROM OTHR		**4,863**			**38,907**	**57,051**	**146%**	**58,360**	**1,309**
TRANSFERS		**4,863**			**38,907**	**57,051**	**146%**	**58,360**	**1,309**
NON-REVENUE RECEIPTS	390A								
REFUND & RECOVERY	3965								
NON-REVENUE RECEIPTS									
BEGINNING CASH BALANCE	399A								
APPROPRIABLE FUND BALAN	3999	10,271			82,175			123,263	123,263
BEGINNING CASH BALANC		**10,271**			**82,175**			**123,263**	**123,263**
REVENUES		**17,325**	**5**		**138,605**	**83,287**	**60%**	**207,907**	**124,620**

		CITY OF HATTIESBURG							. 32
022022 - 2003 TIF B&I-C/S REVENUES		REVENUE REPORT							6/3/13
		8 MONTHS ENDING 05/31/13							
		.....CURRENT.....			.....YEAR-TO-DATE.....			ANNUAL	UNREALIZED
	OBJ/SUB	ESTIMATED	ACTUAL	%REV	ESTIMATED	ACTUAL	%REV	ESTIMATE	BALANCE
REVENUES	200								
MISCELLANEOUS	340A								
INTEREST EARNINGS	3400								
CERTIFICATES OF DEPOSI	3402								
SAVINGS ACCOUNT/MMA	3405		4			80			(80)
OTHER INTEREST	3407								
TREASURY NOTES	3409								
INTEREST EARNINGS			**4**			**80**			**(80)**
MISCELLANEOUS			**4**			**80**			**(80)**
TRANSFERS	380A								
TRANSFERS FROM OTHR FND	3800								
T/F GENERAL FUND	3800 01								
T/F TAX COLLECTORS-GPT	3800 27	20,113	203,625	1012%	160,904	203,625	126%	241,356	37,731
T/F 2003 TIF CONST-CHA	3800 90								
TRANSFERS FROM OTHR		**20,113**	**203,625**	**1012%**	**160,904**	**203,625**	**126%**	**241,356**	**37,731**
TRANSFERS		**20,113**	**203,625**	**1012%**	**160,904**	**203,625**	**126%**	**241,356**	**37,731**
NON-REVENUE RECEIPTS	390A								
REFUND & RECOVERY	3965								
NON-REVENUE RECEIPTS									
BEGINNING CASH BALANCE	399A								
APPROPRIABLE FUND BALAN	3999	11,811			94,493			141,739	141,739
BEGINNING CASH BALANC		**11,811**			**94,493**			**141,739**	**141,739**
REVENUES		**31,924**	**203,629**	**637%**	**255,397**	**203,706**	**79%**	**383,095**	**179,389**

		CITY OF HATTIESBURG							. 33
023023 - 2007 TIF B&I-T/C REVENUES		REVENUE REPORT							6/3/13
		8 MONTHS ENDING 05/31/13							
		.....CURRENT.....			.....YEAR-TO-DATE.....			ANNUAL	UNREALIZED
	OBJ/SUB	ESTIMATED	ACTUAL	%REV	ESTIMATED	ACTUAL	%REV	ESTIMATE	BALANCE
REVENUES	200								
INTER-GOVERNMNTL REVENUE	230A								
CITY/COUNTY-SHARED REVEN	270B								
LAMAR CTY	2708	9,057			72,463	108,694	149%	108,694	
CITY/COUNTY-SHARED RE		**9,057**			**72,463**	**108,694**	**149%**	**108,694**	
MISCELLANEOUS	340A								
INTEREST EARNINGS	3400								
CERTIFICATES OF DEPOSI	3402								
SAVINGS ACCOUNT/MMA	3405	25	22	88%	200	149	74%	300	151
OTHER INTEREST	3407								
TREASURY NOTES	3409								
INTEREST EARNINGS		**25**	**22**	**88%**	**200**	**149**	**74%**	**300**	**151**
MISCELLANEOUS		**25**	**22**	**88%**	**200**	**149**	**74%**	**300**	**151**
TRANSFERS	380A								
TRANSFERS FROM OTHR FND	3800								
T/F TAX COLLECTORS-GPT	3800 27	29,376	360,899	1228%	235,011	360,899	153%	352,517	(8,382)
T/F 2007 TIF CONST-TUR	3800 91								
TRANSFERS FROM OTHR		**29,376**	**360,899**	**1228%**	**235,011**	**360,899**	**153%**	**352,517**	**(8,382)**
TRANSFERS		**29,376**	**360,899**	**1228%**	**235,011**	**360,899**	**153%**	**352,517**	**(8,382)**
NON-REVENUE RECEIPTS	390A								
REFUND & RECOVERY	3965								
NON-REVENUE RECEIPTS									
BEGINNING CASH BALANCE	399A								
APPROPRIABLE FUND BALAN	3999	18,288			146,311			219,466	219,466
BEGINNING CASH BALANC		**18,288**			**146,311**			**219,466**	**219,466**
REVENUES		**56,748**	**360,920**	**636%**	**453,985**	**469,742**	**103%**	**680,977**	**211,235**

		CITY OF HATTIESBURG							. 34
024024 - 2008 TIF B&I-L/C REVENUES		REVENUE REPORT							6/3/13
		8 MONTHS ENDING 05/31/13							
		.....CURRENT.....			.....YEAR-TO-DATE.....			ANNUAL	UNREALIZED
	OBJ/SUB	ESTIMATED	ACTUAL	%REV	ESTIMATED	ACTUAL	%REV	ESTIMATE	BALANCE
REVENUES	200								
INTER-GOVERNMNTL REVENUE	230A								
CITY/COUNTY-SHARED REVEN	270B								
LAMAR CTY	2708								
CITY/COUNTY-SHARED RE									
MISCELLANEOUS	340A								
INTEREST EARNINGS	3400								
CERTIFICATES OF DEPOSI	3402								
SAVINGS ACCOUNT/MMA	3405		5			71			(71)
OTHER INTEREST	3407								
TREASURY NOTES	3409								
INTEREST EARNINGS			**5**			**71**			**(71)**
MISCELLANEOUS			**5**			**71**			**(71)**
TRANSFERS	380A								
TRANSFERS FROM OTHR FND	3800								
T/F TAX COLLECTORS-GPT	3800 27	6,409			51,275	67,533	131%	76,913	9,380
T/F 2008 TIF CONST-L/C	3800 90								
TRANSFERS FROM OTHR		**6,409**			**51,275**	**67,533**	**131%**	**76,913**	**9,380**
TRANSFERS		**6,409**			**51,275**	**67,533**	**131%**	**76,913**	**9,380**
NON-REVENUE RECEIPTS	390A								
REFUND & RECOVERY	3965								
NON-REVENUE RECEIPTS									
BEGINNING CASH BALANCE	399A								
APPROPRIABLE FUND BALAN	3999	9,838			78,707			118,060	118,060
BEGINNING CASH BALANC		**9,838**			**78,707**			**118,060**	**118,060**
REVENUES		**16,247**	**5**		**129,982**	**67,603**	**52%**	**194,973**	**127,370**

		CITY OF HATTIESBURG							. 35
025025 - 2011 TIF B&I-KOHLS REVENUES		REVENUE REPORT							6/3/13
		8 MONTHS ENDING 05/31/13							
		.....CURRENT.....			.....YEAR-TO-DATE.....			ANNUAL	UNREALIZED
	OBJ/SUB	ESTIMATED	ACTUAL	%REV	ESTIMATED	ACTUAL	%REV	ESTIMATE	BALANCE
REVENUES	200								
INTER-GOVERNMNTL REVENUE	230A								
CITY/COUNTY-SHARED REVEN	270B								
LAMAR CTY	2708	2,683	32,200	1200%	21,467	32,200	149%	32,200	
CITY/COUNTY-SHARED RE		**2,683**	**32,200**	**1200%**	**21,467**	**32,200**	**149%**	**32,200**	
MISCELLANEOUS	340A								
INTEREST EARNINGS	3400								
CERTIFICATES OF DEPOSI	3402								
SAVINGS ACCOUNT/MMA	3405		1			10			(10)
OTHER INTEREST	3407								
TREASURY NOTES	3409								
INTEREST EARNINGS			**1**			**10**			**(10)**
MISCELLANEOUS			**1**			**10**			**(10)**
TRANSFERS	380A								
TRANSFERS FROM OTHR FND	3800								
T/F TAX COLLECTORS-GPT	3800 27	6,194			49,559	68,410	138%	74,339	5,929
T/F 2011 TIF CONST-KOH	3800 91	4			33	49	148%	49	
TRANSFERS FROM OTHR		**6,199**			**49,592**	**68,459**	**138%**	**74,388**	**5,929**
TRANSFERS		**6,199**			**49,592**	**68,459**	**138%**	**74,388**	**5,929**
NON-REVENUE RECEIPTS	390A								
REFUND & RECOVERY	3965								
APPROPRIABLE FUND BALAN	3999	1,315			10,525			15,788	15,788
NON-REVENUE RECEIPTS		**1,315**			**10,525**			**15,788**	**15,788**
REVENUES		**10,198**	**32,201**	**315%**	**81,584**	**100,669**	**123%**	**122,376**	**21,707**

		CITY OF HATTIESBURG							. 36
027027 - TAX COLLECTOR'S REVENUES		REVENUE REPORT							6/3/13
		8 MONTHS ENDING 05/31/13							
		.....CURRENT.....			.....YEAR-TO-DATE.....			ANNUAL	UNREALIZED
	OBJ/SUB	ESTIMATED	ACTUAL	%REV	ESTIMATED	ACTUAL	%REV	ESTIMATE	BALANCE
REVENUES	200								
GENERAL PROPERTY TAXES	200A								
CURRENT YEAR TAXES	2000								
REALTY	2001								
REALTY-CITY	2001 CITY		201,592			12,022,101			(12,022,101)
REALTY-O/S SCHOOL DIS	2001 OSD								
REALTY-SCHOOL	2001 SCHL		188,631			12,419,068			(12,419,068)
REALTY-W/I SCHOOL DIS	2001 WSD								
	---	---	---	---	---	---	---	---	---
REALTY			**390,223**			**24,441,168**			**(24,441,168)**
HOMESTEAD LOSS	2005		4709-			(331,557)			331,557
EXEMPT-TAX LOSS REIMB.	2006					240,784			(240,784)
PERSONALTY-AUTO/RAILRO	2010								
PRSNLTY AUTO-CITY	2010 CITY		144,167			839,885			(839,885)
PRSNLTY AUTO-O/S SCHO	2010 OSD								
PRSNLTY RR-O/S SCHOOL	2010 OSDRR								
PRSNLTY AUTO-SCHOOL	2010 SCHL		144,791			872,309			(872,309)
PRSNLTY AUTO-W/I SCHO	2010 WSD								
	---	---	---	---	---	---	---	---	---
PERSONALTY-AUTO/RAI			**288,957**			**1,712,195**			**(1,712,195)**
PERSONALTY	2020								
PERSONALTY-CITY	2020 CITY		139,250			3,972,676			(3,972,676)
PERSONALTY-O/S SCHOOL	2020 OSD								
PERSONALTY-SCHOOL	2020 SCHL		38,706			3,686,769			(3,686,769)
PERSONALTY-W/I SCHOOL	2020 WSD								
	---	---	---	---	---	---	---	---	---
PERSONALTY			**177,955**			**7,659,445**			**(7,659,445)**
RENTAL VEHICLES	2026								
RENTAL VEHICLES-GENER	2026 GEN								
	---	---	---	---	---	---	---	---	---
RENTAL VEHICLES									
	---	---	---	---	---	---	---	---	---
CURRENT YEAR TAXES			**852,426**			**33,722,035**			**(33,722,035)**
PRIOR YEAR TAXES	2030								
NON-EXEMPT REALTY P/Y	2031		1,899			52,866			(52,866)
EXEMPT REALTY P/Y	2035		3,092			77,981			(77,981)
PERSONALTY-AUTO P/Y	2040		2,922			343,590			(343,590)

		CITY OF HATTIESBURG							. 36
027027 - TAX COLLECTOR'S REVENUES		REVENUE REPORT							6/3/13
		8 MONTHS ENDING 05/31/13							
		.....CURRENT.....			.....YEAR-TO-DATE.....			ANNUAL	UNREALIZED
	OBJ/SUB	ESTIMATED	ACTUAL	%REV	ESTIMATED	ACTUAL	%REV	ESTIMATE	BALANCE
PERSONALTY-RAIL CAR P/	2045								
PERSONALTY P/Y	2050		242			(32,171)			32,171
PRIOR YEAR TAXES			**8,154**			**442,266**			**(442,266)**
GENERAL PROPERTY TAXE			**860,581**			**34,164,301**			**(34,164,301)**
TAXES-OTHER	206A								
INT/PENALTY ON DEL. TAX	2100		25,761			150,639			(150,639)
EXCESS BID-PROP. TAXES	2110								
TAXES-OTHER			**25,761**			**150,639**			**(150,639)**
LICENSES, PERMITS & FEES	220A								
OTHER PERMITS & FEES	2230								
CITY CLERK FEES	2232								
OTHER PERMITS & FEES									
LICENSES, PERMITS & F									
MISCELLANEOUS	340A								
INTEREST EARNINGS	3400								
CERTIFICATES OF DEPOSI	3402								
SAVINGS ACCOUNT/MMA	3405		447			3,233			(3,233)
TREASURY NOTES	3409								
INTEREST EARNINGS			**447**			**3,233**			**(3,233)**
MISCELLANEOUS			**447**			**3,233**			**(3,233)**
NON-REVENUE RECEIPTS	390A								
REFUND & RECOVERY	3965								
NON-REVENUE RECEIPTS									
REVENUES			**886,789**			**34,318,173**			**(34,318,173)**

		CITY OF HATTIESBURG							. 38
039039 - AIRPORT IMPR. REVENUES		REVENUE REPORT							6/3/13
		8 MONTHS ENDING 05/31/13							
		.....CURRENT.....			.....YEAR-TO-DATE.....			ANNUAL	UNREALIZED
	OBJ/SUB	ESTIMATED	ACTUAL	%REV	ESTIMATED	ACTUAL	%REV	ESTIMATE	BALANCE
REVENUES	200								
OTHER PERMITS & FEES	2230								
FLOWAGE FEE	2295								
	----------	----------	---------	----	----------	---------	----	----------	----------
OTHER PERMITS & FEES									
INTER-GOVERNMNTL REVENUE	230A								
FEDERAL GRANTS	230B								
FEDERAL AVIATION ADM.	2330	107,849			862,795	18,831	2%	1,294,193	1,275,362
	----------	----------	---------	----	----------	---------	----	----------	----------
FEDERAL GRANTS		**107,849**			**862,795**	**18,831**	**2%**	**1,294,193**	**1,275,362**
STATE GRANTS	250B								
MDOT-MULTIMODAL GRANT	2509								
AIRPORT GRANT	2540								
	----------	----------	---------	----	----------	---------	----	----------	----------
STATE GRANTS									
STATE-SHARED REVENUE	260B								
AIRPLANE REGISTRATION T	2655								
	----------	----------	---------	----	----------	---------	----	----------	----------
STATE-SHARED REVENUE									
CITY/COUNTY-SHARED REVEN	270B								
AIRPORT ASSIST-FORREST	2725								
	----------	----------	---------	----	----------	---------	----	----------	----------
CITY/COUNTY-SHARED RE									
MISCELLANEOUS	340A								
INTEREST EARNINGS	3400								
CERTIFICATES OF DEPOSI	3402								
SAVINGS ACCOUNT/MMA	3405		3			47			(47)
	----------	----------	---------	----	----------	---------	----	----------	----------
INTEREST EARNINGS			**3**			**47**			**(47)**
RENTS AND ROYALTIES	3410								
BUILDING	3412								
YORK INT/JOHNSON CONT	3412 12	291			2,333			3,500	3,500
LORESCO INC	3412 13	100	100	100%	800	800	100%	1,200	400
COCA COLA (1906 COMPA	3412 14								
H'BURG HANGER ASSN.	3412 18	55			440			660	660
SOUTHEAST AVIATION SE	3412 21	1,750	1,514	86%	14,000	14,511	103%	21,000	6,489
OTHER BLDG. RENT	3412 99								

		CITY OF HATTIESBURG							. 38
039039 - AIRPORT IMPR. REVENUES		REVENUE REPORT							6/3/13
		8 MONTHS ENDING 05/31/13							
		.....CURRENT.....			.....YEAR-TO-DATE.....			ANNUAL	UNREALIZED
	OBJ/SUB	ESTIMATED	ACTUAL	%REV	ESTIMATED	ACTUAL	%REV	ESTIMATE	BALANCE
BUILDING		**2,196**	**1,614**	**73%**	**17,573**	**15,311**	**87%**	**26,360**	**11,049**
MINERAL LEASE-AIRPORT	3418								
RENTS AND ROYALTIES		**2,196**	**1,614**	**73%**	**17,573**	**15,311**	**87%**	**26,360**	**11,049**
MISCELLANEOUS		**2,196**	**1,617**	**73%**	**17,573**	**15,358**	**87%**	**26,360**	**11,002**
TRANSFERS	380A								
TRANSFERS FROM OTHR FND	3800								
T/F GENERAL FUND	3800 01	8,333			66,667	100,000	149%	100,000	
TRANSFERS FROM OTHR		**8,333**			**66,667**	**100,000**	**149%**	**100,000**	
TRANSFERS		**8,333**			**66,667**	**100,000**	**149%**	**100,000**	
NON-REVENUE RECEIPTS	390A								
SALE OF REAL ESTATE	3920								
NON-REVENUE RECEIPTS									
BEGINNING CASH BALANCE	399A								
APPROPRIABLE FUND BALAN	3999	10,411			83,289			124,934	124,934
BEGINNING CASH BALANC		**10,411**			**83,289**			**124,934**	**124,934**
REVENUES		**128,790**	**1,617**	**1%**	**1,030,325**	**134,189**	**13%**	**1,545,487**	**1,411,298**

		CITY OF HATTIESBURG							. 40
050050 - 2009 RFDG BONDS REVENUES		REVENUE REPORT							6/3/13
		8 MONTHS ENDING 05/31/13							
		.....CURRENT.....			.....YEAR-TO-DATE.....			ANNUAL	UNREALIZED
	OBJ/SUB	ESTIMATED	ACTUAL	%REV	ESTIMATED	ACTUAL	%REV	ESTIMATE	BALANCE
REVENUES	200								
NON-REVENUE RECEIPTS	390A								
SALE OF BONDS	3910								
BOND PROCEEDS	3912								
BOND PREMIUM	3913								
ACCRUED INTEREST	3915								
	----------	----------	---------	----	----------	---------	----	----------	----------
SALE OF BONDS									
	----------	----------	---------	----	----------	---------	----	----------	----------
NON-REVENUE RECEIPTS									
BEGINNING CASH BALANCE	399A								
APPROPRIABLE FUND BALAN	3999								
	----------	----------	---------	----	----------	---------	----	----------	----------
BEGINNING CASH BALANC									
	----------	----------	---------	----	----------	---------	----	----------	----------
REVENUES									

		CITY OF HATTIESBURG							. 41
072072 - MUN.ROAD&BRIDGE REVENUES		REVENUE REPORT							6/3/13
		8 MONTHS ENDING 05/31/13							
		.....CURRENT.....			.....YEAR-TO-DATE.....			ANNUAL	UNREALIZED
	OBJ/SUB	ESTIMATED	ACTUAL	%REV	ESTIMATED	ACTUAL	%REV	ESTIMATE	BALANCE
REVENUES	200								
INTER-GOVERNMNTL REVENUE	230A								
FEDERAL GRANTS	230B								
FHWA-STORM RELATED	2323								
FEMA RELIEF	2337								
	----------	----------	---------	----	----------	---------	----	----------	----------
FEDERAL GRANTS									
STATE GRANTS	250B								
STATE BOND FDS TRACE/ZO	2501								
WEATHERSBY ROAD	2533								
MDOT-MPO GRANT	2555								
MDOT-MPO GRANT	2555 01								
MDOT-TRAFFIC SIGNALS	2555 02	14,253			114,025	20,214	17%	171,037	150,823
MDOT-NEW TARGET	2555 03								
MDOT-#1 HARDY ST WIDEN	2555 04								
MDOT-LLT-US 49 TO MAIN	2555 05	97,666			781,333			1,172,000	1,172,000
MDOT-#2 HARDY ST WIDEN	2555 06	47,994	251,930	524%	383,957	303,640	79%	575,935	272,295
MDOT-TRAF SIGNAL-SO.PO	2555 07								
MDOT-ARRA-PINE B'WAY T	2555 08								
MDOT-SIDEWALKS-SCHOOLS	2555 09	18,320			146,560	4,005	2%	219,840	215,835
MDOT-WESTERN BELTWAY	2555 10	39,583			316,667			475,000	475,000
MDOT-RAILROAD CROSSING	2555 11	4,166			33,333			50,000	50,000
MDOT-FUTURE PROJECT	2555 12								
MDOT-B'WAY,MOBILE TE	2555 13	55,583			444,667			667,000	667,000
MDOT-34TH AVE TE	2555 14	9,416			75,333			113,000	113,000
MDOT-4TH ST PHASE I	2555 15	225,895			1,807,160			2,710,740	2,710,740
MDOT-4TH ST PHASE II	2555 16	70,000			560,000			840,000	840,000
	----------	----------	---------	----	----------	---------	----	----------	----------
MDOT-MPO GRANT		**582,879**	**251,930**	**43%**	**4,663,035**	**327,859**	**7%**	**6,994,552**	**6,666,693**
	----------	----------	---------	----	----------	---------	----	----------	----------
STATE GRANTS		**582,879**	**251,930**	**43%**	**4,663,035**	**327,859**	**7%**	**6,994,552**	**6,666,693**
CITY/COUNTY-SHARED REVEN	270B								
PRO-RATA CTY RD TAX-FOR	2710	106,833	28,432	26%	854,667	1,093,856	127%	1,282,000	188,144
PRO-RATA CTY RD TAX-LAM	2715	59,166	10,281	17%	473,333	674,877	142%	710,000	35,123
MISCELLANEOUS GRANTS	2740								
	----------	----------	---------	----	----------	---------	----	----------	----------
CITY/COUNTY-SHARED RE		**166,000**	**38,713**	**23%**	**1,328,000**	**1,768,733**	**133%**	**1,992,000**	**223,267**

		CITY OF HATTIESBURG							. 41
072072 - MUN.ROAD&BRIDGE REVENUES		REVENUE REPORT							6/3/13
		8 MONTHS ENDING 05/31/13							
		.....CURRENT.....			.....YEAR-TO-DATE.....			ANNUAL	UNREALIZED
	OBJ/SUB	ESTIMATED	ACTUAL	%REV	ESTIMATED	ACTUAL	%REV	ESTIMATE	BALANCE
MISCELLANEOUS	340A								
INTEREST EARNINGS	3400								
CERTIFICATES OF DEPOSI	3402								
SAVINGS ACCOUNT/MMA	3405	58			467	6	1%	700	694
INTEREST EARNINGS		**58**			**467**	**6**	**1%**	**700**	**694**
CONTRIBUTIONS-PUBLIC	3450								
CONTRIBUTIONS-FORREST	3455	6,250			50,000			75,000	75,000
CONTRIB-RAILS TO TRAIL	3457	28,333			226,667			340,000	340,000
CONTRIBUTIONS-PUBLIC		**34,583**			**276,667**			**415,000**	**415,000**
CONTRIBUTIONS-PRIVATE	3460								
CONTRIB-RAILROAD PROJE	3461	22,250			178,000	181,000	101%	267,000	86,000
CONTRIB-CHAUVET SQ.PRO	3469								
CONTRIBUTIONS-PRIVAT		**22,250**			**178,000**	**181,000**	**101%**	**267,000**	**86,000**
MISCELLANEOUS		**56,891**			**455,133**	**181,006**	**39%**	**682,700**	**501,694**
TRANSFERS	380A								
TRANSFERS FROM OTHR FND	3800								
T/F W & S CONSTRUCTION	3800 75								
T/F INDUSTRIAL PARK DE	3800 87								
TRANSFERS FROM OTHR									
TRANSFERS									
NON-REVENUE RECEIPTS	390A								
SALE OF TIMBER	3923								
REFUND & RECOVERY	3965					452			(452)
REFUND-COST SHARING	3969								
CAPITAL LEASE PROCEEDS	3970								
NON-REVENUE RECEIPTS						**452**			**(452)**
BEGINNING CASH BALANCE	399A								
APPROPRIABLE FUND BALAN	3999	49,396			395,173			592,759	592,759

		CITY OF HATTIESBURG							. 41
072072 - MUN.ROAD&BRIDGE REVENUES		REVENUE REPORT							6/3/13
		8 MONTHS ENDING 05/31/13							
		.....CURRENT.....			.....YEAR-TO-DATE.....			ANNUAL	UNREALIZED
	OBJ/SUB	ESTIMATED	ACTUAL	%REV	ESTIMATED	ACTUAL	%REV	ESTIMATE	BALANCE
BEGINNING CASH BALANC		**49,396**			**395,173**			**592,759**	**592,759**
	----------	----------	---------	----	----------	---------	----	----------	----------
REVENUES		**855,167**	**290,643**	**33%**	**6,841,341**	**2,278,051**	**33%**	**10,262,011**	**7,983,960**

		CITY OF HATTIESBURG							. 43
073073 - MASS TRANSIT REVENUES		REVENUE REPORT							6/3/13
		8 MONTHS ENDING 05/31/13							
		.....CURRENT.....			.....YEAR-TO-DATE.....			ANNUAL	UNREALIZED
	OBJ/SUB	ESTIMATED	ACTUAL	%REV	ESTIMATED	ACTUAL	%REV	ESTIMATE	BALANCE
REVENUES	200								
INTER-GOVERNMNTL REVENUE	230A								
FEDERAL GRANTS	230B								
UMTA-MASS TRANS-OPER.C/	2340	68,827	19,523	28%	550,616	187,576	34%	825,924	638,348
UMTA-MASS TRANS-CAPTL.	2341	37,845			302,761	28,895	9%	454,142	425,247
UMTA-MASS TRANS-PLANNIN	2342					2,696			(2,696)
UMTA-MASS TRANS-P/Y	2343								
UMTA-MASS TRANS-PREV.C/	2344	25,337	13,834	54%	202,703	117,140	57%	304,054	186,914
ARRA-MASS TRANS	2345	32,530	8370-	25%	260,245	57,594	22%	390,368	332,774
FEDERAL GRANTS		**164,540**	**24,987**	**15%**	**1,316,325**	**393,901**	**29%**	**1,974,488**	**1,580,587**
STATE GRANTS	250B								
MDOT GRANT(PLANNING/CAP	2555								
STATE GRANTS									
MISCELLANEOUS	340A								
INTEREST EARNINGS	3400								
CERTIFICATES OF DEPOSI	3402								
SAVINGS ACCOUNT/MMA	3405		38			187			(187)
INTEREST EARNINGS			**38**			**187**			**(187)**
MASS TRANSIT CHARGES	3520								
BUS FARES-FIXED ROUTES	3525	2,916	3,543	121%	23,333	26,193	112%	35,000	8,807
BUS FARES-DEMAND RES-D	3527								
ADVERTISING	3535	283	206	72%	2,267	2,076	91%	3,400	1,324
MISC. CHARGES & FEES	3540								
MASS TRANSIT CHARGES		**3,200**	**3,748**	**117%**	**25,600**	**28,269**	**110%**	**38,400**	**10,131**
MISCELLANEOUS		**3,200**	**3,787**	**118%**	**25,600**	**28,456**	**111%**	**38,400**	**9,944**
TRANSFERS	380A								
TRANSFERS FROM OTHR FND	3800								
T/F GENERAL FUND	3800 01	27,916			223,333	335,000	150%	335,000	
T/F TAX COLLECTORS-GPT	3800 27	16,666	5,130	30%	133,333	181,685	136%	200,000	18,315
TRANSFERS FROM OTHR		**44,583**	**5,130**	**11%**	**356,667**	**516,685**	**144%**	**535,000**	**18,315**

		CITY OF HATTIESBURG							. 43
073073 - MASS TRANSIT REVENUES		REVENUE REPORT							6/3/13
		8 MONTHS ENDING 05/31/13							
		.....CURRENT.....			.....YEAR-TO-DATE.....			ANNUAL	UNREALIZED
	OBJ/SUB	ESTIMATED	ACTUAL	%REV	ESTIMATED	ACTUAL	%REV	ESTIMATE	BALANCE
TRANSFERS		**44,583**	**5,130**	**11%**	**356,667**	**516,685**	**144%**	**535,000**	**18,315**
NON-REVENUE RECEIPTS	390A								
SALE OF EQUIPMENT	3940					7,414			(7,414)
SALE OF SCRAP MATERIAL	3943								
VENDING COMM./REFUNDS	3964								
REFUND & RECOVERY	3965								
RECOVERY OF DAMAGE CLAI	3967								
	----------	----------	---------	----	----------	---------	----	----------	----------
NON-REVENUE RECEIPTS						**7,414**			**(7,414)**
BEGINNING CASH BALANCE	399A								
APPROPRIABLE FUND BALAN	3999	11,452			91,621			137,431	137,431
	----------	----------	---------	----	----------	---------	----	----------	----------
BEGINNING CASH BALANC		**11,452**			**91,621**			**137,431**	**137,431**
	----------	----------	---------	----	----------	---------	----	----------	----------
REVENUES		**223,776**	**33,904**	**15%**	**1,790,213**	**946,455**	**52%**	**2,685,319**	**1,738,864**

		CITY OF HATTIESBURG							. 45
075075 - W&S CONSTR.REVENUES		REVENUE REPORT							6/3/13
		8 MONTHS ENDING 05/31/13							
		.....CURRENT.....			.....YEAR-TO-DATE.....			ANNUAL	UNREALIZED
	OBJ/SUB	ESTIMATED	ACTUAL	%REV	ESTIMATED	ACTUAL	%REV	ESTIMATE	BALANCE
REVENUES	200								
INTER-GOVERNMNTL REVENUE	230A								
FEDERAL GRANTS	230B								
CDBG-USA YEAST	2336	416,666	1,721,927	413%	3,333,333	1,770,782	53%	5,000,000	3,229,218
FEMA RELIEF	2337								
CDBG-WIS PAK	2338	3,182			25,458	38,187	150%	38,187	
CDBG-WATER PLANT 2 RENO	2339	10,871			86,973	35,425	40%	130,459	95,034
US CORPS OF ENGR PROJEC	2354								
LAGOON AERATORS-DOE ARR	2357								
COUNTRY CLUB WATER-EPA	2358								
NRCS EROSION CONTROL GR	2512								
I.P.-HYBERPLASTIC-MDA G	2514								
	----------	----------	---------	----	----------	---------	----	----------	----------
FEDERAL GRANTS		**430,720**	**1,721,927**	**399%**	**3,445,764**	**1,844,394**	**53%**	**5,168,646**	**3,324,252**
CITY/COUNTY-SHARED REVEN	270B								
FORREST CTY	2705								
PETAL	2737								
LAMAR PARK	2738								
	----------	----------	---------	----	----------	---------	----	----------	----------
CITY/COUNTY-SHARED RE									
MISCELLANEOUS	340A								
INTEREST EARNINGS	3400								
CERTIFICATES OF DEPOSI	3402								
SAVINGS ACCOUNT/MMA	3405	83	105	126%	667	1,650	247%	1,000	(650)
	----------	----------	---------	----	----------	---------	----	----------	----------
INTEREST EARNINGS		**83**	**105**	**126%**	**667**	**1,650**	**247%**	**1,000**	**(650)**
RENTS AND ROYALTIES	3410								
LAND	3411								
TRITELL COMMUNICATION	3411 12								
AT&T/CINGULAR(WTR WOR	3411 13	2,083	597	28%	16,667	19,332	115%	25,000	5,668
SBA STRUCTURES (WM CA	3411 14	1,166			9,333	9,839	105%	14,000	4,161
	----------	----------	---------	----	----------	---------	----	----------	----------
LAND		**3,250**	**597**	**18%**	**26,000**	**29,171**	**112%**	**39,000**	**9,829**
BUILDING	3412								
USM CELLULAR ONE RENT	3412 41								
TH INC MANAGEMENT(USM	3412 42								
VERIZON-USM WATER TAN	3412 43	1,075	1,156	107%	8,600	9,245	107%	12,900	3,655

		CITY OF HATTIESBURG							. 45
075075 - W&S CONSTR.REVENUES		REVENUE REPORT							6/3/13
		8 MONTHS ENDING 05/31/13							
		.....CURRENT.....			.....YEAR-TO-DATE.....			ANNUAL	UNREALIZED
	OBJ/SUB	ESTIMATED	ACTUAL	%REV	ESTIMATED	ACTUAL	%REV	ESTIMATE	BALANCE
CELLULAR SOUTH(MULTI	3412 44	1,380			11,040	9,660	87%	16,560	6,900
BUILDING		**2,455**	**1,156**	**47%**	**19,640**	**18,905**	**96%**	**29,460**	**10,555**
RENTS AND ROYALTIES		**5,705**	**1,753**	**30%**	**45,640**	**48,076**	**105%**	**68,460**	**20,384**
CONTRIBUTIONS-PRIVATE	3460								
CONTRIB-USA YEAST SWR	3461								
CONTRIBUTIONS-PRIVAT									
MISCELLANEOUS		**5,788**	**1,858**	**32%**	**46,307**	**49,726**	**107%**	**69,460**	**19,734**
TRANSFERS	380A								
TRANSFERS FROM OTHR FND	3800								
T/F GENERAL FUND	3800 01								
T/F WATER & SEWER O &	3800 09								
T/F WATER & SEWER B&I	3800 10								
T/F WATER & SEWER	3800 11	150,000	154,351	102%	1,200,000	1,469,661	122%	1,800,000	330,339
T/F W & S CONTINGENCY	3800 17								
T/F COM.DEV.BLK.GRANT	3800 82								
T/F INDUSTRIAL PARK DE	3800 87								
TRANSFERS FROM OTHR		**150,000**	**154,351**	**102%**	**1,200,000**	**1,469,661**	**122%**	**1,800,000**	**330,339**
TRANSFERS		**150,000**	**154,351**	**102%**	**1,200,000**	**1,469,661**	**122%**	**1,800,000**	**330,339**
NON-REVENUE RECEIPTS	390A								
REFUND & RECOVERY	3965								
CAPITAL LEASE PROCEEDS	3970								
NOTE PROCEEDS	3975	250,000			2,000,000	3,000,000	150%	3,000,000	
SRF LOAN PROCEEDS-#1	3980								
SRF LOAN PROCEEDS-#2	3985								
SRF LOAN PROCEEDS-#3	3987								
NON-REVENUE RECEIPTS		**250,000**			**2,000,000**	**3,000,000**	**150%**	**3,000,000**	
BEGINNING CASH BALANCE	399A								
APPROPRIABLE FUND BALAN	3999	415,003			3,320,026			4,980,039	4,980,039

		CITY OF HATTIESBURG							. 45
075075 - W&S CONSTR.REVENUES		REVENUE REPORT							6/3/13
		8 MONTHS ENDING 05/31/13							
		.....CURRENT.....			.....YEAR-TO-DATE.....			ANNUAL	UNREALIZED
	OBJ/SUB	ESTIMATED	ACTUAL	%REV	ESTIMATED	ACTUAL	%REV	ESTIMATE	BALANCE
BEGINNING CASH BALANC		**415,003**			**3,320,026**			**4,980,039**	**4,980,039**
	---	---	---	---	---	---	---	---	---
REVENUES		**1,251,512**	**1,878,135**	**150%**	**10,012,097**	**6,363,781**	**63%**	**15,018,145**	**8,654,364**

		CITY OF HATTIESBURG							. 47
077077 - COMMUNITY CTR REVENUES		REVENUE REPORT							6/3/13
		8 MONTHS ENDING 05/31/13							
		.....CURRENT.....			.....YEAR-TO-DATE.....			ANNUAL	UNREALIZED
	OBJ/SUB	ESTIMATED	ACTUAL	%REV	ESTIMATED	ACTUAL	%REV	ESTIMATE	BALANCE
REVENUES	200								
CHARGES FOR SERVICES	280A								
CULTURE AND RECREATION	3100								
SAENGER RESTORA/MAINT	3125								
SAENGER CONCESSIONS	3132								
GIFT SHOP CONCESSIONS	3135								
TCKT MASTER/IN-HOUSE P	3136								
MCNAIR REC CTR USE FE	3140	41	38	92%	333	38	11%	500	463
SIGLER CENTER USE FEE	3141	125			1,000	88	8%	1,500	1,413
C.E.ROY/5TH ST.C.C.USE	3142	666	100	15%	5,333	1,378	25%	8,000	6,622
JDS C.C. USE FEE	3143	1,083	1,913	176%	8,667	6,195	71%	13,000	6,805
SAENGER THEATER USE FE	3144								
CULTURAL CTR USE FEE	3146	583	700	120%	4,667	4,825	103%	7,000	2,175
N R BURGER/6TH ST CC U	3148								
	----------	----------	---------	----	----------	---------	----	----------	----------
CULTURE AND RECREATI		**2,500**	**2,750**	**110%**	**20,000**	**12,523**	**62%**	**30,000**	**17,477**
	----------	----------	---------	----	----------	---------	----	----------	----------
CHARGES FOR SERVICES		**2,500**	**2,750**	**110%**	**20,000**	**12,523**	**62%**	**30,000**	**17,477**
MISCELLANEOUS	340A								
INTEREST EARNINGS	3400								
CERTIFICATES OF DEPOSI	3402								
SAVINGS ACCOUNT/MMA	3405	16	52	325%	133	232	174%	200	(32)
	----------	----------	---------	----	----------	---------	----	----------	----------
INTEREST EARNINGS		**16**	**52**	**325%**	**133**	**232**	**174%**	**200**	**(32)**
RENTS AND ROYALTIES	3410								
EQUIPMENT	3419								
	----------	----------	---------	----	----------	---------	----	----------	----------
RENTS AND ROYALTIES									
CONTRIBUTIONS-PUBLIC	3450								
CONTRIBUTIONS-FORREST	3455								
	----------	----------	---------	----	----------	---------	----	----------	----------
CONTRIBUTIONS-PUBLIC									
CONTRIBUTIONS-PRIVATE	3460								
	----------	----------	---------	----	----------	---------	----	----------	----------
MISCELLANEOUS		**16**	**52**	**325%**	**133**	**232**	**174%**	**200**	**(32)**
TRANSFERS	380A								
TRANSFERS FROM OTHR FND	3800								

		CITY OF HATTIESBURG							. 47
077077 - COMMUNITY CTR REVENUES		REVENUE REPORT							6/3/13
		8 MONTHS ENDING 05/31/13							
		.....CURRENT.....			.....YEAR-TO-DATE.....			ANNUAL	UNREALIZED
	OBJ/SUB	ESTIMATED	ACTUAL	%REV	ESTIMATED	ACTUAL	%REV	ESTIMATE	BALANCE
T/F GENERAL FUND	3800 01	64,166			513,333	500,000	97%	770,000	270,000
	----------	----------	---------	----	----------	---------	----	----------	----------
TRANSFERS FROM OTHR		**64,166**			**513,333**	**500,000**	**97%**	**770,000**	**270,000**
	----------	----------	---------	----	----------	---------	----	----------	----------
TRANSFERS		**64,166**			**513,333**	**500,000**	**97%**	**770,000**	**270,000**
NON-REVENUE RECEIPTS	390A								
COMMISSIONS-TCKTS/CONCE	3963								
REFUND & RECOVERY	3965								
RECOVERY OF DAMAGE CLAI	3967	31,233			249,867	354,697	141%	374,800	20,103
	----------	----------	---------	----	----------	---------	----	----------	----------
NON-REVENUE RECEIPTS		31,233			249,867	354,697	141%	374,800	20,103
BEGINNING CASH BALANCE	399A								
APPROPRIABLE FUND BALAN	3999	14,102			112,817			169,226	169,226
	----------	----------	---------	----	----------	---------	----	----------	----------
BEGINNING CASH BALANC		**14,102**			**112,817**			**169,226**	**169,226**
	----------	----------	---------	----	----------	---------	----	----------	----------
REVENUES		**112,018**	**2,802**	**2%**	**896,151**	**867,452**	**96%**	**1,344,226**	**476,774**

		CITY OF HATTIESBURG							. 49
078078 - '09 WATER METER PROJ REVENUES		REVENUE REPORT							6/3/13
		8 MONTHS ENDING 05/31/13							
		.....CURRENT.....			.....YEAR-TO-DATE.....			ANNUAL	UNREALIZED
	OBJ/SUB	ESTIMATED	ACTUAL	%REV	ESTIMATED	ACTUAL	%REV	ESTIMATE	BALANCE
REVENUES	200								
MISCELLANEOUS	340A								
INTEREST EARNINGS	3400								
SAVINGS ACCOUNT/MMA	3405		3			36			(36)
INTEREST EARNINGS			**3**			**36**			**(36)**
MISCELLANEOUS			**3**			**36**			**(36)**
NON-REVENUE RECEIPTS	390A								
SALE OF BONDS	3910								
BOND PROCEEDS	3912								
ACCRUED INTEREST	3915								
SALE OF BONDS									
NOTE PROCEEDS	3975								
NON-REVENUE RECEIPTS									
BEGINNING CASH BALANCE	399A								
APPROPRIABLE FUND BALAN	3999	4,143			33,145			49,718	49,718
BEGINNING CASH BALANC		**4,143**			**33,145**			**49,718**	**49,718**
REVENUES		**4,143**	**3**		**33,145**	**36**		**49,718**	**49,682**

		CITY OF HATTIESBURG							. 50
082082 - CDBG REVENUES		REVENUE REPORT							6/3/13
		8 MONTHS ENDING 05/31/13							
		.....CURRENT.....			.....YEAR-TO-DATE.....			ANNUAL	UNREALIZED
	OBJ/SUB	ESTIMATED	ACTUAL	%REV	ESTIMATED	ACTUAL	%REV	ESTIMATE	BALANCE
REVENUES	200								
INTER-GOVERNMNTL REVENUE	230A								
FEDERAL GRANTS	230B								
CDBG-R ARRA (WOODLEY SD	2338								
CDBG-ENT.-DRAINAGE	2365 DRG								
CDBG-ENT.-EMER.REHAB.	2365 ER								
CDBG-ENT.-FULL REHAB.	2365 FR								
	----------	----------	---------	----	----------	---------	----	----------	----------
CDBG-R ARRA (WOODLEY									
HOME ENTITLEMENT-1995	2367								
HOME ENTIT-DOWNPAYMENT	2367 DA								
HOME ENTIT-FULL REHAB.	2367 FR								
	----------	----------	---------	----	----------	---------	----	----------	----------
HOME ENTITLEMENT-199									
CDBG-ENTITLEMENT-1996	2385								
CDBG-ENT.-ECONOMIC DEV	2385 EC								
CDBG-ENT.-EMER.REHAB.	2385 ER								
CDBG-ENT.-FACADE PROG	2385 FAC								
CDBG-ENT.-FULL REHAB.	2385 FR								
	----------	----------	---------	----	----------	---------	----	----------	----------
CDBG-ENTITLEMENT-199									
HOME ENTITLEMENT-1996	2387								
HOME ENTIT-CHDO	2387 CHDO								
HOME ENTIT-DOWNPAYMENT	2387 DA								
HOME ENTIT-FULL REHAB.	2387 FR								
	----------	----------	---------	----	----------	---------	----	----------	----------
HOME ENTITLEMENT-199									
HOME ENTITLEMENT-1997	2389								
HOME ENTIT-AFFORD.HOUS	2389 AH								
HOME ENTIT-CHDO	2389 CHDO								
HOME ENTIT-DOWNPAYMENT	2389 DA								
HOME ENTIT-FULL REHAB.	2389 FR								
	----------	----------	---------	----	----------	---------	----	----------	----------
HOME ENTITLEMENT-199									
CDBG-ENTITLEMENT-1997	2391								
CDBG-ENT.-DEMOLITION	2391 DEM								
CDBG-ENT.-EMER.REHAB.	2391 ER								

		CITY OF HATTIESBURG							. 50
082082 - CDBG REVENUES		REVENUE REPORT							6/3/13
		8 MONTHS ENDING 05/31/13							
		.....CURRENT.....			.....YEAR-TO-DATE.....			ANNUAL	UNREALIZED
	OBJ/SUB	ESTIMATED	ACTUAL	%REV	ESTIMATED	ACTUAL	%REV	ESTIMATE	BALANCE
CDBG-ENT.-FULL REHAB.	2391 FR								
CDBG-ENT.-NEIGHBORHD G	2391 NG								
	----------	----------	---------	----	----------	---------	----	----------	----------
CDBG-ENTITLEMENT-199									
HOME ENTITLEMENT-1998	2393								
HOME ENTIT-AFFORD.HOUS	2393 AH								
HOME ENTIT-CHDO	2393 CHDO								
HOME ENTIT-DOWNPAYMENT	2393 DA								
HOME ENTIT-FULL REHAB.	2393 FR								
	----------	----------	---------	----	----------	---------	----	----------	----------
HOME ENTITLEMENT-199									
CDBG-ENTITLEMENT-1998	2395								
CDBG-ENT.-ADMINISTRATI	2395 ADM								
CDBG-ENT.-DEMOLITION	2395 DEM								
CDBG-ENT.-DRAINAGE	2395 DRG								
CDBG-ENT.-EATON SCHOOL	2395 EAT								
CDBG-ENT.-EMER.REHAB.	2395 ER								
CDBG-ENT.-FULL REHAB.	2395 FR								
CDBG-ENT.-NEIGHBORHD G	2395 NG								
CDBG-ENT.-PLANNING	2395 PL								
CDBG-ENT.-PUBLIC SERVI	2395 PS								
	----------	----------	---------	----	----------	---------	----	----------	----------
CDBG-ENTITLEMENT-199									
HOME ENTITLEMENT-1999	2397								
HOME ENTIT-AFFORD.HOUS	2397 AH								
HOME ENTIT-CHDO ADMIN	2397 CHDOAD								
HOME ENTIT-CHDO SETASI	2397 CHDOSA								
HOME ENTIT-DOWNPAYMENT	2397 DA								
HOME ENTIT-DA RECAPTUR	2397 DAR								
HOME ENTIT-FULL REHAB.	2397 FR								
	----------	----------	---------	----	----------	---------	----	----------	----------
HOME ENTITLEMENT-199									
CDBG-ENTITLEMENT-1999	2399								
CDBG-ENT.-ADMINISTRATI	2399 ADM								
CDBG-ENT.-BRADY ST SEW	2399 BSS								
CDBG-ENT.-DEMOLITION	2399 DEM								

		CITY OF HATTIESBURG							. 50
082082 - CDBG REVENUES		REVENUE REPORT							6/3/13
		8 MONTHS ENDING 05/31/13							
		.....CURRENT.....			.....YEAR-TO-DATE.....			ANNUAL	UNREALIZED
	OBJ/SUB	ESTIMATED	ACTUAL	%REV	ESTIMATED	ACTUAL	%REV	ESTIMATE	BALANCE
CDBG-ENT.-DRAINAGE	2399 DRG								
CDBG-ENT.-EATON SCHOOL	2399 EAT								
CDBG-ENT.-EMER.REHAB.	2399 ER								
CDBG-ENT.-FULL REHAB.	2399 FR								
CDBG-ENT.-NEIGHBORHD G	2399 NG								
CDBG-ENT.-PLANNING	2399 PL								
CDBG-ENT.-PRVO	2399 PRVO								
CDBG-ENT.-PUBLIC SERVI	2399 PS								
CDBG-ENT.-SIDEWALKS	2399 SWLK								
	----------	----------	---------	----	----------	---------	----	----------	----------
CDBG-ENTITLEMENT-199									
CDBG-ENTITLEMENT-2000	2401								
CDBG-ENT.-ADMINISTRATI	2401 ADM								
CDBG-ENT.-DEMOLITION	2401 DEM								
CDBG-ENT.-DRAINAGE	2401 DRG								
CDBG-ENT.-EMER.REHAB.	2401 ER								
CDBG-ENT.-FACADE PROG	2401 FAC								
CDBG-ENT.-FULL REHAB.	2401 FR								
CDBG-ENT.-NEIGHBORHD G	2401 NG								
CDBG-ENT.-PUBLIC SERVI	2401 PS								
CDBG-ENT.-SIDEWALKS	2401 SWLK								
	----------	----------	---------	----	----------	---------	----	----------	----------
CDBG-ENTITLEMENT-200									
HOME ENTITLEMENT-2000	2402								
HOME ENTIT-AFFORD.HOUS	2402 AH								
HOME ENTIT-CHDO ADMIN	2402 CHDOAD								
HOME ENTIT-CHDO SETASI	2402 CHDOSA								
HOME ENTIT-DOWNPAYMENT	2402 DA								
HOME ENTIT-FULL REHAB.	2402 FR								
	----------	----------	---------	----	----------	---------	----	----------	----------
HOME ENTITLEMENT-200									
CDBG-ENTITLEMENT-2001	2403								
CDBG-ENT.-ADMINISTRATI	2403 ADM								
CDBG-ENT.-DEMOLITION	2403 DEM								
CDBG-ENT.-DRAINAGE	2403 DRG								
CDBG-ENT.-EATON SCHOOL	2403 EAT								

		CITY OF HATTIESBURG							. 50
082082 - CDBG REVENUES		REVENUE REPORT							6/3/13
		8 MONTHS ENDING 05/31/13							
		.....CURRENT.....			.....YEAR-TO-DATE.....			ANNUAL	UNREALIZED
	OBJ/SUB	ESTIMATED	ACTUAL	%REV	ESTIMATED	ACTUAL	%REV	ESTIMATE	BALANCE
CDBG-ENT.-EMER.REHAB.	2403 ER								
CDBG-ENT.-FACADE PROG	2403 FAC								
CDBG-ENT.-FULL REHAB.	2403 FR								
CDBG-ENT.-D/T LIGHTING	2403 LIGHT								
CDBG-ENT.-PLANNING	2403 PL								
CDBG-ENT.-PUBLIC SERVI	2403 PS								
CDBG-ENT.-SIDEWALKS	2403 SWLK								
	----------	----------	---------	----	----------	---------	----	----------	----------
CDBG-ENTITLEMENT-200									
HOME ENTITLEMENT-2001	2404								
HOME ENTIT-ADMINISTRAT	2404 ADM								
HOME ENTIT-AFFORD.HOUS	2404 AH								
HOME ENTIT-CHDO ADMIN	2404 CHDOAD								
HOME ENTIT-CHDO SETASI	2404 CHDOSA								
HOME ENTIT-DOWNPAYMENT	2404 DA								
HOME ENTIT-FULL REHAB.	2404 FR								
	----------	----------	---------	----	----------	---------	----	----------	----------
HOME ENTITLEMENT-200									
HOME ENTITLEMENT-2002	2406								
HOME ENTIT-ADMINISTRAT	2406 ADM								
HOME ENTIT-AFFORD.HOUS	2406 AH								
HOME ENTIT-CHDO OPERAT	2406 CHDO								
HOME ENTIT-DOWNPAYMENT	2406 DA								
HOME ENTIT-FULL REHAB.	2406 FR								
HOME ENTIT-HOME BUYER	2406 HBE								
HOME ENTIT	2406 HE								
	----------	----------	---------	----	----------	---------	----	----------	----------
HOME ENTITLEMENT-200									
CDBG-ENTITLEMENT-2002	2407								
CDBG-ENT.-ADMINISTRATI	2407 ADM								
CDBG-ENT.-ADMIN/EMER R	2407 ADMER								
CDBG-ENT.-ADMIN/FULL R	2407 ADMFR								
CDBG ENT.-CHDO OPERATI	2407 CHDO								
CDBG-ENT.-DEMOLITION	2407 DEM								
CDBG-ENT.-DRAINAGE	2407 DRG								
CDBG-ENT.-EATON SCHOOL	2407 EAT								

		CITY OF HATTIESBURG							. 50
082082 - CDBG REVENUES		REVENUE REPORT							6/3/13
		8 MONTHS ENDING 05/31/13							
		.....CURRENT.....			.....YEAR-TO-DATE.....			ANNUAL	UNREALIZED
	OBJ/SUB	ESTIMATED	ACTUAL	%REV	ESTIMATED	ACTUAL	%REV	ESTIMATE	BALANCE
CDBG-ENT.-EMER.REHAB.	2407 ER								
CDBG-ENT.-FACADE PROG	2407 FAC								
CDBG-ENT.-FULL REHAB.	2407 FR								
CDBG-ENT.-PLANNING	2407 PL								
CDBG-ENT.-PUBLIC SERVI	2407 PS								
	----------	----------	---------	----	----------	---------	----	----------	----------
CDBG-ENTITLEMENT-200									
HOME ENTITLEMENT-2003	2408								
HOME ENTIT-ADMINISTRAT	2408 ADM								
HOME ENTIT-AFFORD.HOUS	2408 AH								
HOME ENTIT-CHDO OPERAT	2408 CHDO								
HOME ENTIT-DOWNPAYMENT	2408 DA								
HOME ENTIT-FULL REHAB.	2408 FR								
HOME ENTIT-REHAB.SUBRE	2408 RSC								
	----------	----------	---------	----	----------	---------	----	----------	----------
HOME ENTITLEMENT-200									
CDBG-ENTITLEMENT-2003	2409								
CDBG-ENT.-ADMINISTRATI	2409 ADM								
CDBG-ENT.-ADMIN/EMER R	2409 ADMER								
CDBG-ENT.-ADMIN/FULL R	2409 ADMFR								
CDBG-ENT.-ADMIN/PUBLIC	2409 ADMPS								
CDBG-ENT.-DEMOLITION	2409 DEM								
CDBG-ENT.-EMER ALERT P	2409 EAP								
CDBG-ENT.-EMER.REHAB.	2409 ER								
CDBG-ENT.-FACADE PROG	2409 FAC								
CDBG-ENT.-FULL REHAB.	2409 FR								
CDBG-ENT.-MICRO LOAN P	2409 MLP								
CDBG-ENT.-PLANNING	2409 PL								
CDBG-ENT.-PUBLIC SERVI	2409 PS								
CDBG-ENT.-REHAB.SUBREC	2409 RSC								
CDBG-ENT.-WORLD CHANGE	2409 WC								
	----------	----------	---------	----	----------	---------	----	----------	----------
CDBG-ENTITLEMENT-200									
HOME ENTITLEMENT-2004	2410								
HOME ENTIT-ADMINISTRAT	2410 ADM								
HOME ENTIT-AFFORD.HOUS	2410 AH								
HOME ENTIT-CHDO SETASI	2410 CHDOSA								

		CITY OF HATTIESBURG							. 50
082082 - CDBG REVENUES		REVENUE REPORT							6/3/13
		8 MONTHS ENDING 05/31/13							
		.....CURRENT.....			.....YEAR-TO-DATE.....			ANNUAL	UNREALIZED
	OBJ/SUB	ESTIMATED	ACTUAL	%REV	ESTIMATED	ACTUAL	%REV	ESTIMATE	BALANCE
HOME ENTIT-DOWNPAYMENT	2410 DA								
HOME ENTIT-FULL REHAB.	2410 FR								
HOME ENTIT-REHAB.SUBRE	2410 RSC								
	----------	----------	---------	----	----------	---------	----	----------	----------
HOME ENTITLEMENT-200									
CDBG-ENTITLEMENT-2004	2411								
CDBG-ENT.-ADMINISTRATI	2411 ADM								
CDBG-ENT.-ADMIN/FULL R	2411 ADMFR								
CDBG-ENT.-ADMIN/HSG RE	2411 ADMHR								
CDBG-ENT.-ADMIN/PUBLIC	2411 ADMPS								
CDBG-ENT.-DEMOLITION	2411 DEM								
CDBG-ENT.-EMER ALERT P	2411 EAP								
CDBG-ENT.-ENGINEERING	2411 EP								
CDBG-ENT.-FACADE PROG	2411 FAC								
CDBG-ENT.-FULL REHAB.	2411 FR								
CDBG-ENT.-HOUSING REPR	2411 HR								
CDBG-ENT.-PLANNING	2411 PL								
CDBG-ENT.-WORLD CHANGE	2411 WC								
	----------	----------	---------	----	----------	---------	----	----------	----------
CDBG-ENTITLEMENT-200									
HOME ENTITLEMENT-2005	2412								
HOME ENTIT-ADMINISTRAT	2412 ADM								
HOME ENTIT-AFFORD.HOUS	2412 AH								
HOME ENTIT-CHDO OPERAT	2412 CHDO	3,512			28,101			42,151	42,151
HOME ENTIT-DOWNPAYMENT	2412 DA								
HOME ENTIT-FULL REHAB.	2412 FR								
HOME ENTIT-HOUSING REH	2412 HR								
HOME ENTIT-REHAB.SUBRE	2412 RSC								
	----------	----------	---------	----	----------	---------	----	----------	----------
HOME ENTITLEMENT-200		**3,512**			**28,101**			**42,151**	**42,151**
CDBG-ENTITLEMENT-2005	2413								
CDBG-ENT.-ADMINISTRATI	2413 ADM								
CDBG-ENT.-ADMIN/FULL R	2413 ADMFR								
CDBG-ENT.-ADMIN/HSG RE	2413 ADMHR								
CDBG-ENT.-ADMIN/PUBLIC	2413 ADMPS								
CDBG-ENT.-DEMOLITION	2413 DEM								

		CITY OF HATTIESBURG							. 50
082082 - CDBG REVENUES		REVENUE REPORT							6/3/13
		8 MONTHS ENDING 05/31/13							
		.....CURRENT.....			.....YEAR-TO-DATE.....			ANNUAL	UNREALIZED
	OBJ/SUB	ESTIMATED	ACTUAL	%REV	ESTIMATED	ACTUAL	%REV	ESTIMATE	BALANCE
CDBG-ENT.-ENGINEERING	2413 EP								
CDBG-ENT.-FACADE PROG	2413 FAC								
CDBG-ENT.-FULL REHAB.	2413 FR								
CDBG-ENT.-HOUSING REPR	2413 HR								
CDBG-ENT.-PLANNING	2413 PL								
CDBG-ENT.-PUBLIC SERVI	2413 PS								
CDBG-ENT.-WORLD CHANGE	2413 WC								
	----------	----------	---------	----	----------	---------	----	----------	----------
CDBG-ENTITLEMENT-200									
HOME ENTITLEMENT-2006	2414								
HOME ENTIT-ADMINISTRAT	2414 ADM								
HOME ENTIT-AFFORD.HOUS	2414 AH								
HOME ENTIT-CHDO ADMIN	2414 CHDO								
HOME ENTIT-CHDO SETASI	2414 CHDOSA	2,786	2,462	88%	22,292	31,429	140%	33,438	2,009
HOME ENTIT-DOWNPAYMENT	2414 DA								
HOME ENTIT-HOUSING REH	2414 HR								
	----------	----------	---------	----	----------	---------	----	----------	----------
HOME ENTITLEMENT-200		**2,786**	**2,462**	**88%**	**22,292**	**31,429**	**140%**	**33,438**	**2,009**
CDBG-ENTITLEMENT-2006	2415								
CDBG-ENT.-ADMINISTRATI	2415 ADM								
CDBG-ENT.-ADMIN/FULL R	2415 ADMFR								
CDBG-ENT.-ADMIN/HSG RE	2415 ADMHR								
CDBG-ENT.-ADMIN/PUBLIC	2415 ADMPS								
CDBG-ENT.-DEMOLITION	2415 DEM								
CDBG-ENT.-DRAINAGE	2415 DRG								
CDBG-ENT.-ENGINEERING	2415 EP								
CDBG-ENT.-FACADE PROG	2415 FAC								
CDBG-ENT.-FULL REHAB.	2415 FR								
CDBG-ENT.-HOUSING REPR	2415 HR								
CDBG-ENT.-PLANNING	2415 PL								
CDBG-ENT.-PUBLIC SERVI	2415 PS								
CDBG-ENT.-WORLD CHANGE	2415 WC								
	----------	----------	---------	----	----------	---------	----	----------	----------
CDBG-ENTITLEMENT-200									
HOME ENTITLEMENT-2007	2416								
HOME ENTIT-ADMINISTRAT	2416 ADM								

		CITY OF HATTIESBURG							. 50
082082 - CDBG REVENUES		REVENUE REPORT							6/3/13
		8 MONTHS ENDING 05/31/13							
		.....CURRENT.....			.....YEAR-TO-DATE.....			ANNUAL	UNREALIZED
	OBJ/SUB	ESTIMATED	ACTUAL	%REV	ESTIMATED	ACTUAL	%REV	ESTIMATE	BALANCE
HOME ENTIT-AFFORD.HOUS	2416 AH								
HOME ENTIT-CHDO ADMIN	2416 CHDOAD								
HOME ENTIT-CHDO SETASI	2416 CHDOSA	3,585			28,681	45,629	159%	43,022	(2,607)
HOME ENTIT-DOWNPAYMENT	2416 DA								
HOME ENTIT-FULL REHAB.	2416 FR	152	1,618	1064%	1,217	9,468	777%	1,826	(7,642)
HOME ENTIT-HOUSING REH	2416 HR								
HOME ENTIT-PLANNING	2416 PL								
	----------	----------	---------	----	----------	---------	----	----------	----------
HOME ENTITLEMENT-200		**3,737**	**1,618**	**43%**	**29,899**	**55,097**	**184%**	**44,848**	**(10,249)**
CDBG-ENTITLEMENT-2007	2417								
CDBG-ENT.-ADMINISTRATI	2417 ADM								
CDBG-ENT.-ADMIN/FULL R	2417 ADMFR								
CDBG-ENT.-ADMIN/HSG RE	2417 ADMHR								
CDBG-ENT.-ADMIN/PUBLIC	2417 ADMPS								
CDBG-ENT.-DEMOLITION	2417 DEM								
CDBG-ENT.-ENGINEERING	2417 EP								
CDBG-ENT.-FACADE PROG	2417 FAC								
CDBG-ENT.-FULL REHAB.	2417 FR								
CDBG-ENT.-HOUSING REPR	2417 HR								
CDBG-ENT.-INFRASTRUC P	2417 IS								
CDBG-ENT.-PLANNING	2417 PL								
CDBG-ENT.-PUBLIC SERVI	2417 PS								
CDBG-ENT.-WORLD CHANGE	2417 WC								
	----------	----------	---------	----	----------	---------	----	----------	----------
CDBG-ENTITLEMENT-200									
HOME ENTITLEMENT-2008	2418								
HOME ENTIT-ADMINISTRAT	2418 ADM								
HOME ENTIT-AFFORD.HOUS	2418 AH								
HOME ENTIT-CHDO ADMIN	2418 CHDOAD								
HOME ENTIT-CHDO SETASI	2418 CHDOSA	776			6,213			9,319	9,319
HOME ENTIT-DOWNPAYMENT	2418 DA								
HOME ENTIT-HOUSING REH	2418 HR								
	----------	----------	---------	----	----------	---------	----	----------	----------
HOME ENTITLEMENT-200		**776**			**6,213**			**9,319**	**9,319**
CDBG-ENTITLEMENT-2008	2419								
CDBG-ENT.-ADMINISTRATI	2419 ADM								
CDBG-ENT.-ADMIN/FULL R	2419 ADMFR								

		CITY OF HATTIESBURG							. 50
082082 - CDBG REVENUES		REVENUE REPORT							6/3/13
		8 MONTHS ENDING 05/31/13							
		.....CURRENT.....			.....YEAR-TO-DATE.....			ANNUAL	UNREALIZED
	OBJ/SUB	ESTIMATED	ACTUAL	%REV	ESTIMATED	ACTUAL	%REV	ESTIMATE	BALANCE
CDBG-ENT.-ADMIN/HSG RE	2419 ADMHR								
CDBG-ENT.-ADMIN/PUBLIC	2419 ADMPS								
CDBG-ENT.-BLUE ROOFS	2419 BR	7,681			61,454	13,971	22%	92,181	78,210
CDBG-ENT.-DEMOLITION	2419 DEM								
CDBG-ENT.-DOWNTOWN LIG	2419 DL								
CDBG-ENT.-DRAINAGE	2419 DRG								
CDBG-ENT.-ENGINEERING	2419 EP								
CDBG-ENT.-FACADE PROG	2419 FAC								
CDBG-ENT.-FULL REHAB.	2419 FR								
CDBG-ENT.-HOUSING REPR	2419 HR		2,500			18,117			(18,117)
CDBG-ENT.-INFRASTRUC P	2419 IS								
CDBG-ENT.-PLANNING	2419 PL								
CDBG-ENT.-PUBLIC SERVI	2419 PS								
CDBG-ENT.-WORLD CHANGE	2419 WC								
	----------	----------	---------	----	----------	---------	----	----------	----------
CDBG-ENTITLEMENT-200		**7,681**	**2,500**	**32%**	**61,454**	**32,088**	**52%**	**92,181**	**60,093**
HOME ENTITLEMENT-2009	2420								
HOME ENTIT-ADMINISTRAT	2420 ADM								
HOME ENTIT-AFFORD.HOUS	2420 AH								
HOME ENTIT-CHDO ADMIN	2420 CHDO								
HOME ENTIT-CHDO SETASI	2420 CHDOSA	1,892			15,142	13,213	87%	22,713	9,500
HOME ENTIT-DOWNPAYMENT	2420 DA								
HOME ENTIT-HOUSING REH	2420 HR								
HOME ENTIT-RECONS-SA P	2420 RECSA	1,911			15,294	1,600	10%	22,941	21,341
	----------	----------	---------	----	----------	---------	----	----------	----------
HOME ENTITLEMENT-200		**3,804**			**30,436**	**14,813**	**48%**	**45,654**	**30,841**
CDBG-ENTITLEMENT-2009	2421								
CDBG-ENT.-ADMINISTRATI	2421 ADM								
CDBG-ENT.-ADM DISABIL	2421 ADMDA								
CDBG-ENT.-ADMIN/FULL R	2421 ADMFR								
CDBG-ENT.-ADMIN/HSG RE	2421 ADMHR								
CDBG-ENT.-ADMIN/PUBLIC	2421 ADMPS								
CDBG-ENT.-DEMOLITION	2421 DEM								
CDBG-ENT.-DOWNTOWN LIG	2421 DL								
CDBG-ENT.-ENGINEERING	2421 EP								
CDBG-ENT.-FACADE PROG	2421 FAC								

		CITY OF HATTIESBURG							. 50
082082 - CDBG REVENUES		REVENUE REPORT							6/3/13
		8 MONTHS ENDING 05/31/13							
		.....CURRENT.....			.....YEAR-TO-DATE.....			ANNUAL	UNREALIZED
	OBJ/SUB	ESTIMATED	ACTUAL	%REV	ESTIMATED	ACTUAL	%REV	ESTIMATE	BALANCE
CDBG-ENT.-FACILITIES	2421 FC	4,838			38,711			58,066	58,066
CDBG-ENT.-FULL REHAB.	2421 FR								
CDBG-ENT.-HOUSING REPR	2421 HR								
CDBG-ENT.-INFRASTRUC P	2421 IS								
CDBG-ENT.-PLANNING	2421 PL								
CDBG-ENT.-PUBLIC SERVI	2421 PS								
CDBG-ENT.-WORLD CHANGE	2421 WC								
	----------	----------	---------	----	----------	---------	----	----------	----------
CDBG-ENTITLEMENT-200		**4,838**			**38,711**			**58,066**	**58,066**
HOME ENTITLEMENT-2010	2422								
HOME ENTIT-ADMINISTRAT	2422 ADM								
HOME ENTIT-CHDO ADMIN	2422 CHDO	112			897			1,346	1,346
HOME ENTIT-CHDO SETASI	2422 CHDOSA	4,699			37,599			56,398	56,398
HOME ENTIT-DWNPYMNT AS	2422 DA	5,000			40,000			60,000	60,000
HOME ENTIT-FULL REHAB	2422 FR	6,840			54,722	475		82,083	81,608
	----------	----------	---------	----	----------	---------	----	----------	----------
HOME ENTITLEMENT-201		**16,652**			**133,218**	**475**		**199,827**	**199,352**
CDBG-ENTITLEMENT-2010	2423								
CDBG-ENT.-ADMINISTRATI	2423 ADM								
CDBG-ENT.-ADM DISABIL	2423 ADMDISAD								
CDBG-ENT.-DEMOLITION	2423 DEM								
CDBG-ENT.-FACADE PROG	2423 FAC	3,750			30,000	8,000	26%	45,000	37,000
CDBG-ENT.-HOUSING REPR	2423 HR					7,608			(7,608)
CDBG-ENT.-INFRASTRUC P	2423 IS								
CDBG-ENT.-PROJECT DELI	2423 PD								
CDBG-ENT.-PUBLIC SERVI	2423 PS								
	----------	----------	---------	----	----------	---------	----	----------	----------
CDBG-ENTITLEMENT-201		**3,750**			**30,000**	**15,608**	**52%**	**45,000**	**29,392**
HOME ENTITLEMENT-2011	2424								
HOME ENTIT-ADMINISTRAT	2424 ADM								
HOME ENTIT-CHDO SETASI	2424 CHDOSA	4,128			33,026			49,539	49,539
HOME ENTIT-HOUSING PRO	2424 HP	17,609			140,875	79,735	56%	211,312	131,577
	----------	----------	---------	----	----------	---------	----	----------	----------
HOME ENTITLEMENT-201		**21,737**			**173,901**	**79,735**	**45%**	**260,851**	**181,116**
CDBG-ENTITLEMENT-2011	2425								
CDBG-ENT.-ADMINISTRATI	2425 ADM								

		CITY OF HATTIESBURG							. 50
082082 - CDBG REVENUES		REVENUE REPORT							6/3/13
		8 MONTHS ENDING 05/31/13							
		.....CURRENT.....			.....YEAR-TO-DATE.....			ANNUAL	UNREALIZED
	OBJ/SUB	ESTIMATED	ACTUAL	%REV	ESTIMATED	ACTUAL	%REV	ESTIMATE	BALANCE
CDBG-ENT.-ADM DISABIL	2425 ADMDISAD								
CDBG-ENT.-DEMOLITION	2425 DEM	1,603			12,824			19,236	19,236
CDBG-ENT.-HOUSING REPR	2425 HR	14,462			115,696	12,847	11%	173,544	160,697
CDBG-ENT.-INFRASTRUC P	2425 IS	4,166			33,333			50,000	50,000
CDBG-ENT.-MICROENT PRO	2425 MA	1,750			14,000			21,000	21,000
CDBG-ENT.-PROJ DELIVER	2425 PD								
CDBG-ENT.-PUBLIC SERVI	2425 PS					1,374			(1,374)
	----------	----------	---------	----	----------	---------	----	----------	----------
CDBG-ENTITLEMENT-201		**21,981**			**175,853**	**14,222**	**8%**	**263,780**	**249,559**
HOME ENTITLEMENT-2012	2426								
HOME ENTIT-ADMINISTRAT	2426 ADM	2,299			18,397	10,743	58%	27,596	16,853
HOME ENTIT-CHDO SETASI	2426 CHDOSA	3,449			27,596			41,394	41,394
HOME ENTIT-HOUSING PRO	2426 HP	17,247	610	3%	137,979	610		206,968	206,358
	----------	----------	---------	----	----------	---------	----	----------	----------
HOME ENTITLEMENT-201		**22,996**	**610**	**2%**	**183,972**	**11,353**	**6%**	**275,958**	**264,605**
CDBG-ENTITLEMENT-2012	2427								
CDBG-ENT.-ADMINISTRATI	2427 ADM	9,617			76,937	45,798	59%	115,405	69,607
CDBG-ENT.-DEMOLITION	2427 DEM	4,166			33,333			50,000	50,000
CDBG-ENT.-HOUSING PROG	2427 HP	18,051	9,570	53%	144,412	106,131	73%	216,618	110,487
CDBG-ENT.-MICROENT PRO	2427 MA	2,500			20,000	12,767	63%	30,000	17,233
CDBG-ENT.-PROJECT DELI	2427 PD	8,333			66,667	23,726	35%	100,000	76,274
CDBG-ENT.-PUBLIC SERVI	2427 PS	5,416			43,333	30,318	69%	65,000	34,682
	----------	----------	---------	----	----------	---------	----	----------	----------
CDBG-ENTITLEMENT-201		**48,085**	**9,570**	**19%**	**384,682**	**218,740**	**56%**	**577,023**	**358,283**
HOME ENTITLEMENT-2013	2428								
HOME ENTIT-ADMINISTRAT	2428 ADM								
HOME ENTIT-CHDO SETASI	2428 CHDOSA								
HOME ENTIT-DWNPYMNT AS	2428 DA								
HOME ENTIT-HOUSING PRO	2428 HP								
	----------	----------	---------	----	----------	---------	----	----------	----------
HOME ENTITLEMENT-201									
CDBG-ENTITLEMENT-2013	2429								
CDBG-ENT.-ADMINISTRATI	2429 ADM								
CDBG-ENT.-DEMOLITION	2429 DEM								
CDBG-ENT.-HOMELESS/SP	2429 HL/SP								
CDBG-ENT.-HOUSING PROG	2429 HP								

		CITY OF HATTIESBURG							. 50
082082 - CDBG REVENUES		REVENUE REPORT							6/3/13
		8 MONTHS ENDING 05/31/13							
		.....CURRENT.....			.....YEAR-TO-DATE.....			ANNUAL	UNREALIZED
	OBJ/SUB	ESTIMATED	ACTUAL	%REV	ESTIMATED	ACTUAL	%REV	ESTIMATE	BALANCE
CDBG-ENT.-MICROENT PRO	2429 MA								
CDBG-ENT.-PROJECT DELI	2429 PD								
CDBG-ENT.-PUBLIC SERVI	2429 PS								
	----------	----------	---------	----	----------	---------	----	----------	----------
CDBG-ENTITLEMENT-201									
HOME REVOLVING LOANS	2495								
MDA AM DREAM D/P (ADDI)	2497								
MISCELLANEOUS GRANTS	2740								
SALVATION ARMY	2740 04								
	----------	----------	---------	----	----------	---------	----	----------	----------
MISCELLANEOUS GRANTS									
	----------	----------	---------	----	----------	---------	----	----------	----------
FEDERAL GRANTS		**162,341**	**16,760**	**10%**	**1,298,731**	**473,560**	**36%**	**1,948,096**	**1,474,536**
TRANSFERS	380A								
TRANSFERS FROM OTHR FND	3800								
T/F GENERAL FUND	3800 01								
T/F WATER & SEWER O &	3800 09								
T/F MUN.ROAD & BRIDGE	3800 72								
	----------	----------	---------	----	----------	---------	----	----------	----------
TRANSFERS FROM OTHR									
	----------	----------	---------	----	----------	---------	----	----------	----------
TRANSFERS									
NON-REVENUE RECEIPTS	390A								
REFUND & RECOVERY	3965								
	----------	----------	---------	----	----------	---------	----	----------	----------
NON-REVENUE RECEIPTS									
BEGINNING CASH BALANCE	399A								
APPROPRIABLE FUND BALAN	3999	1,460			11,685			17528-	(17,528)
	----------	----------	---------	----	----------	---------	----	----------	----------
BEGINNING CASH BALANC		**1,460**			**11,685**			**17528-**	**(17,528)**
	----------	----------	---------	----	----------	---------	----	----------	----------
REVENUES		**160,880**	**16,760**	**10%**	**1,287,045**	**473,560**	**36%**	**1,930,568**	**1,457,008**

		CITY OF HATTIESBURG							. 59
087087 - INDUSTRIALPK REVENUES		REVENUE REPORT							6/3/13
		8 MONTHS ENDING 05/31/13							
		.....CURRENT.....			.....YEAR-TO-DATE.....			ANNUAL	UNREALIZED
	OBJ/SUB	ESTIMATED	ACTUAL	%REV	ESTIMATED	ACTUAL	%REV	ESTIMATE	BALANCE
REVENUES	200								
OTHER PERMITS & FEES	2230								
MISC. PERMITS & FEES	2299								
	----------	----------	---------	----	----------	---------	----	----------	----------
OTHER PERMITS & FEES									
FEDERAL GRANTS	230B								
EDA GRANT-MASTER PLAN	2333								
EDA GRANT-OWENS/ILL PRO	2338								
	----------	----------	---------	----	----------	---------	----	----------	----------
FEDERAL GRANTS									
STATE GRANTS	250B								
OWENS/ILL PROJ-RR SPUR	2541								
USA YEAST PROJ-RR SPUR	2542								
	----------	----------	---------	----	----------	---------	----	----------	----------
STATE GRANTS									
MISCELLANEOUS	340A								
INTEREST EARNINGS	3400								
CERTIFICATES OF DEPOSI	3402								
SAVINGS ACCOUNT/MMA	3405		65			781			(781)
TREASURY NOTES	3409								
	----------	----------	---------	----	----------	---------	----	----------	----------
INTEREST EARNINGS			**65**			**781**			**(781)**
RENTS AND ROYALTIES	3410								
LAND	3411								
LAMAR OUTDOOR ADVERTI	3411 05								
	----------	----------	---------	----	----------	---------	----	----------	----------
LAND									
BUILDING	3412								
BROWN BOTTLING (PEPSI	3412 10								
L&S REALTORS	3412 11								
KOHLER	3412 17					274,211			(274,211)
JPM OF MS., INC.	3412 20								
SUNBEAM/OSTER	3412 23								
	----------	----------	---------	----	----------	---------	----	----------	----------
BUILDING						**274,211**			**(274,211)**
	----------	----------	---------	----	----------	---------	----	----------	----------
RENTS AND ROYALTIES						**274,211**			**(274,211)**

		CITY OF HATTIESBURG							. 59
087087 - INDUSTRIALPK REVENUES		REVENUE REPORT							6/3/13
		8 MONTHS ENDING 05/31/13							
		.....CURRENT.....			.....YEAR-TO-DATE.....			ANNUAL	UNREALIZED
	OBJ/SUB	ESTIMATED	ACTUAL	%REV	ESTIMATED	ACTUAL	%REV	ESTIMATE	BALANCE
CONTRIBUTIONS-PUBLIC	3450								
CONTRIBUTIONS-FORREST	3455					65,000			(65,000)
CONTRIBUTIONS-CITY	3456					65,000			(65,000)
CONTRIBUTIONS-ADP	3457								
CONTRIBUTIONS-PRVEPA	3458								
	----------	----------	---------	----	----------	---------	----	----------	----------
CONTRIBUTIONS-PUBLIC						**130,000**			**(130,000)**
	----------	----------	---------	----	----------	---------	----	----------	----------
MISCELLANEOUS			**65**			**404,992**			**(404,992)**
TRANSFERS	380A								
TRANSFERS FROM OTHR FND	3800								
	----------	----------	---------	----	----------	---------	----	----------	----------
TRANSFERS									
NON-REVENUE RECEIPTS	390A								
SALE OF BONDS	3910								
BOND PROCEEDS	3912								
ACCRUED INTEREST	3915								
OTHER BOND INCOME	3919								
CAP STATE LOAN'96-CIT	3919 CSL96C								
CAP STATE LOAN'96-FOR	3919 CSL96F								
CAP STATE LOAN'97-CIT	3919 CSL97C								
CAP STATE LOAN'97-FOR	3919 CSL97F								
MBIA BONDS	3919 MBIA								
	----------	----------	---------	----	----------	---------	----	----------	----------
OTHER BOND INCOME									
	----------	----------	---------	----	----------	---------	----	----------	----------
SALE OF BONDS									
SALE OF REAL ESTATE	3920								
SALE OF TIMBER	3923					50,144			(50,144)
SALE OF EASEMENTS	3925								
SALE OF MISC. ITEMS	3945								
REFUND & RECOVERY	3965								
	----------	----------	---------	----	----------	---------	----	----------	----------
NON-REVENUE RECEIPTS						**50,144**			**(50,144)**
BEGINNING CASH BALANCE	399A								
APPROPRIABLE FUND BALAN	3999								

		CITY OF HATTIESBURG							. 59
087087 - INDUSTRIALPK REVENUES		REVENUE REPORT							6/3/13
		8 MONTHS ENDING 05/31/13							
		.....CURRENT.....			.....YEAR-TO-DATE.....			ANNUAL	UNREALIZED
	OBJ/SUB	ESTIMATED	ACTUAL	%REV	ESTIMATED	ACTUAL	%REV	ESTIMATE	BALANCE
	----------	----------	---------	----	----------	---------	----	----------	----------
BEGINNING CASH BALANC									
	----------	----------	---------	----	----------	---------	----	----------	----------
REVENUES			**65**			**455,136**			**(455,136)**

		CITY OF HATTIESBURG							. 61
088088 - 2002 TIF CONST-S/P-REVENUES		REVENUE REPORT							6/3/13
		8 MONTHS ENDING 05/31/13							
		.....CURRENT.....			.....YEAR-TO-DATE.....			ANNUAL	UNREALIZED
	OBJ/SUB	ESTIMATED	ACTUAL	%REV	ESTIMATED	ACTUAL	%REV	ESTIMATE	BALANCE
REVENUES	200								
MISCELLANEOUS	340A								
INTEREST EARNINGS	3400								
CERTIFICATES OF DEPOSI	3402								
SAVINGS ACCOUNT/MMA	3405								
REPURCHASE AGREEMENTS	3408								
TREASURY NOTES	3409								
	----------	----------	---------	----	----------	---------	----	----------	----------
INTEREST EARNINGS									
	----------	----------	---------	----	----------	---------	----	----------	----------
MISCELLANEOUS									
NON-REVENUE RECEIPTS	390A								
SALE OF BONDS	3910								
BOND PROCEEDS	3912								
ACCRUED INTEREST	3915								
	----------	----------	---------	----	----------	---------	----	----------	----------
SALE OF BONDS									
	----------	----------	---------	----	----------	---------	----	----------	----------
NON-REVENUE RECEIPTS									
BEGINNING CASH BALANCE	399A								
APPROPRIABLE FUND BALAN	3999								
	----------	----------	---------	----	----------	---------	----	----------	----------
BEGINNING CASH BALANC									
	----------	----------	---------	----	----------	---------	----	----------	----------
REVENUES									

		CITY OF HATTIESBURG							. 62
089089 - 2004 TIF CONST-H/D-REVENUES		REVENUE REPORT							6/3/13
		8 MONTHS ENDING 05/31/13							
		.....CURRENT.....			.....YEAR-TO-DATE.....			ANNUAL	UNREALIZED
	OBJ/SUB	ESTIMATED	ACTUAL	%REV	ESTIMATED	ACTUAL	%REV	ESTIMATE	BALANCE
REVENUES	200								
MISCELLANEOUS	340A								
INTEREST EARNINGS	3400								
CERTIFICATES OF DEPOSI	3402								
SAVINGS ACCOUNT/MMA	3405								
REPURCHASE AGREEMENTS	3408								
TREASURY NOTES	3409								
	----------	----------	---------	----	----------	---------	----	----------	----------
INTEREST EARNINGS									
	----------	----------	---------	----	----------	---------	----	----------	----------
MISCELLANEOUS									
NON-REVENUE RECEIPTS	390A								
SALE OF BONDS	3910								
BOND PROCEEDS	3912								
ACCRUED INTEREST	3915								
	----------	----------	---------	----	----------	---------	----	----------	----------
SALE OF BONDS									
REFUND & RECOVERY	3965								
	----------	----------	---------	----	----------	---------	----	----------	----------
NON-REVENUE RECEIPTS									
BEGINNING CASH BALANCE	399A								
APPROPRIABLE FUND BALAN	3999								
	----------	----------	---------	----	----------	---------	----	----------	----------
BEGINNING CASH BALANC									
	----------	----------	---------	----	----------	---------	----	----------	----------
REVENUES									

		CITY OF HATTIESBURG							. 63
090090 - 2008 D/T LIGHTING-REVENUES		REVENUE REPORT							6/3/13
		8 MONTHS ENDING 05/31/13							
		.....CURRENT.....			.....YEAR-TO-DATE.....			ANNUAL	UNREALIZED
	OBJ/SUB	ESTIMATED	ACTUAL	%REV	ESTIMATED	ACTUAL	%REV	ESTIMATE	BALANCE
REVENUES	200								
MISCELLANEOUS	340A								
INTEREST EARNINGS	3400								
CERTIFICATES OF DEPOSI	3402								
SAVINGS ACCOUNT/MMA	3405								
REPURCHASE AGREEMENTS	3408								
TREASURY NOTES	3409								
	----------	----------	---------	----	----------	---------	----	----------	----------
INTEREST EARNINGS									
	----------	----------	---------	----	----------	---------	----	----------	----------
MISCELLANEOUS									
TRANSFERS	380A								
TRANSFERS FROM OTHR FND	3800								
T/F TAX COLLECTORS-GPT	3800 27								
	----------	----------	---------	----	----------	---------	----	----------	----------
TRANSFERS FROM OTHR									
	----------	----------	---------	----	----------	---------	----	----------	----------
TRANSFERS									
NON-REVENUE RECEIPTS	390A								
SALE OF BONDS	3910								
BOND PROCEEDS	3912								
ACCRUED INTEREST	3915								
	----------	----------	---------	----	----------	---------	----	----------	----------
SALE OF BONDS									
REFUND & RECOVERY	3965								
NOTE PROCEEDS	3975								
	----------	----------	---------	----	----------	---------	----	----------	----------
NON-REVENUE RECEIPTS									
BEGINNING CASH BALANCE	399A								
APPROPRIABLE FUND BALAN	3999								
	----------	----------	---------	----	----------	---------	----	----------	----------
BEGINNING CASH BALANC									
	----------	----------	---------	----	----------	---------	----	----------	----------
REVENUES									

		CITY OF HATTIESBURG							. 64
091091 - TIF CONST-REVENUES		REVENUE REPORT							6/3/13
		8 MONTHS ENDING 05/31/13							
		.....CURRENT.....			.....YEAR-TO-DATE.....			ANNUAL	UNREALIZED
	OBJ/SUB	ESTIMATED	ACTUAL	%REV	ESTIMATED	ACTUAL	%REV	ESTIMATE	BALANCE
REVENUES	200								
MISCELLANEOUS	340A								
INTEREST EARNINGS	3400								
CERTIFICATES OF DEPOSI	3402								
SAVINGS ACCOUNT/MMA	3405								
REPURCHASE AGREEMENTS	3408								
TREASURY NOTES	3409								
	---	---	---	---	---	---	---	---	---
INTEREST EARNINGS									
	---	---	---	---	---	---	---	---	---
MISCELLANEOUS									
NON-REVENUE RECEIPTS	390A								
SALE OF BONDS	3910								
BOND PROCEEDS	3912								
ACCRUED INTEREST	3915								
	---	---	---	---	---	---	---	---	---
SALE OF BONDS									
REFUND & RECOVERY	3965								
	---	---	---	---	---	---	---	---	---
NON-REVENUE RECEIPTS									
BEGINNING CASH BALANCE	399A								
APPROPRIABLE FUND BALAN	3999	4			33			49	49
	---	---	---	---	---	---	---	---	---
BEGINNING CASH BALANC		**4**			**33**			**49**	**49**
	---	---	---	---	---	---	---	---	---
REVENUES		**4**			**33**			**49**	**49**

		CITY OF HATTIESBURG							. 65
094094 - 2012 W&S REVENUE BOND CONSTR		REVENUE REPORT							6/3/13
		8 MONTHS ENDING 05/31/13							
		.....CURRENT.....			.....YEAR-TO-DATE.....			ANNUAL	UNREALIZED
	OBJ/SUB	ESTIMATED	ACTUAL	%REV	ESTIMATED	ACTUAL	%REV	ESTIMATE	BALANCE
REVENUES	200								
MISCELLANEOUS	340A								
INTEREST EARNINGS	3400								
CERTIFICATES OF DEPOSI	3402								
SAVINGS ACCOUNT/MMA	3405	83	40	48%	667	424	63%	1,000	576
REPURCHASE AGREEMENTS	3408								
TREASURY NOTES	3409								
INTEREST EARNINGS		**83**	**40**	**48%**	**667**	**424**	**63%**	**1,000**	**576**
MISCELLANEOUS		**83**	**40**	**48%**	**667**	**424**	**63%**	**1,000**	**576**
NON-REVENUE RECEIPTS	390A								
SALE OF BONDS	3910								
BOND PROCEEDS	3912								
ACCRUED INTEREST	3915								
SALE OF BONDS									
NON-REVENUE RECEIPTS									
BEGINNING CASH BALANCE	399A								
APPROPRIABLE FUND BALAN	3999	666,274			5,330,192			7,995,288	7,995,288
BEGINNING CASH BALANC		**666,274**			**5,330,192**			**7,995,288**	**7,995,288**
REVENUES		**666,357**	**40**		**5,330,859**	**424**		**7,996,288**	**7,995,864**

		CITY OF HATTIESBURG							. 66
095095 - 2001 BOND CONSTR REVENUES		REVENUE REPORT							6/3/13
		8 MONTHS ENDING 05/31/13							
		.....CURRENT.....			.....YEAR-TO-DATE.....			ANNUAL	UNREALIZED
	OBJ/SUB	ESTIMATED	ACTUAL	%REV	ESTIMATED	ACTUAL	%REV	ESTIMATE	BALANCE
REVENUES	200								
STATE GRANTS	250B								
ARTS COMMISSION GRANT	2521								
	----------	----------	---------	----	----------	---------	----	---------	---------
STATE GRANTS									
MISCELLANEOUS	340A								
INTEREST EARNINGS	3400								
CERTIFICATES OF DEPOSI	3402								
SAVINGS ACCOUNT/MMA	3405		16			154			(154)
REPURCHASE AGREEMENTS	3408								
TREASURY NOTES	3409								
	----------	----------	---------	----	----------	---------	----	---------	---------
INTEREST EARNINGS			**16**			**154**			**(154)**
CONTRIBUTIONS-PUBLIC	3450								
CONTRIBUTIONS-FORREST	3455								
	----------	----------	---------	----	----------	---------	----	---------	---------
CONTRIBUTIONS-PUBLIC									
CONTRIBUTIONS-PRIVATE	3460								
CONTRIB-H'BURG. CONV.	3465								
CONTRIB-OTHER	3469								
	----------	----------	---------	----	----------	---------	----	---------	---------
CONTRIBUTIONS-PRIVAT									
	----------	----------	---------	----	----------	---------	----	---------	---------
MISCELLANEOUS			**16**			**154**			**(154)**
TRANSFERS	380A								
TRANSFERS FROM OTHR FND	3800								
T/F GENERAL FUND	3800 01								
	----------	----------	---------	----	----------	---------	----	---------	---------
TRANSFERS FROM OTHR									
	----------	----------	---------	----	----------	---------	----	---------	---------
TRANSFERS									
NON-REVENUE RECEIPTS	390A								
SALE OF BONDS	3910								
BOND PROCEEDS	3912								
ACCRUED INTEREST	3915								
	----------	----------	---------	----	----------	---------	----	---------	---------
SALE OF BONDS									

		CITY OF HATTIESBURG							. 66
095095 - 2001 BOND CONSTR REVENUES		REVENUE REPORT							6/3/13
		8 MONTHS ENDING 05/31/13							
		.....CURRENT.....			.....YEAR-TO-DATE.....			ANNUAL	UNREALIZED
	OBJ/SUB	ESTIMATED	ACTUAL	%REV	ESTIMATED	ACTUAL	%REV	ESTIMATE	BALANCE
REFUND & RECOVERY	3965								
	----------	----------	---------	----	----------	---------	----	----------	----------
NON-REVENUE RECEIPTS									
BEGINNING CASH BALANCE	399A								
APPROPRIABLE FUND BALAN	3999	15,618			124,951			187,427	187,427
	----------	----------	---------	----	----------	---------	----	----------	----------
BEGINNING CASH BALANC		**15,618**			**124,951**			**187,427**	**187,427**
	----------	----------	---------	----	----------	---------	----	----------	----------
REVENUES		**15,618**	**16**		**124,951**	**154**		**187,427**	**187,273**

		CITY OF HATTIESBURG							. 68
096096 - MDB CAPITALPROJ REVENUES		REVENUE REPORT							6/3/13
		8 MONTHS ENDING 05/31/13							
		.....CURRENT.....			.....YEAR-TO-DATE.....			ANNUAL	UNREALIZED
	OBJ/SUB	ESTIMATED	ACTUAL	%REV	ESTIMATED	ACTUAL	%REV	ESTIMATE	BALANCE
REVENUES	200								
FEDERAL GRANTS	230B								
HUD GRANT-CHAIN PARK PH	2353	2,048			16,386	23,587	143%	24,579	992
US CORPS OF ENGR PROJEC	2354								
FEDERAL TRANSIT ADM.	2355								
	----------	----------	---------	----	----------	---------	----	----------	----------
FEDERAL GRANTS		**2,048**			**16,386**	**23,587**	**143%**	**24,579**	**992**
STATE GRANTS	250B								
ARCHIVES & HISTORY	2505								
MDOT GRANT-4TH ST WIDEN	2506								
MDOT GRANT-CHAIN PARK	2507								
MDOT ARRA-CHAIN PARK	2543					5,887			(5,887)
	----------	----------	---------	----	----------	---------	----	----------	----------
STATE GRANTS						**5,887**			**(5,887)**
MISCELLANEOUS	340A								
INTEREST EARNINGS	3400								
SAVINGS ACCOUNT/MMA	3405		9			63			(63)
	----------	----------	---------	----	----------	---------	----	----------	----------
INTEREST EARNINGS			**9**			**63**			**(63)**
	----------	----------	---------	----	----------	---------	----	----------	----------
MISCELLANEOUS			**9**			**63**			**(63)**
TRANSFERS	380A								
TRANSFERS FROM OTHR FND	3800								
T/F GENERAL FUND	3800 01								
	----------	----------	---------	----	----------	---------	----	----------	----------
TRANSFERS FROM OTHR									
	----------	----------	---------	----	----------	---------	----	----------	----------
TRANSFERS									
NON-REVENUE RECEIPTS	390A								
REFUND & RECOVERY	3965								
NOTE PROCEEDS	3975								
DEPOT PROJECT	3975 01								
WATER & SEWER IMPR	3975 02								
FIRE/POLICE STATION	3975 03								
DRAINAGE PROJECTS	3975 04								
LEGAL COSTS	3975 05								
MDOT GRANT PROJECTS	3975 06								

		CITY OF HATTIESBURG							. 68
096096 - MDB CAPITALPROJ REVENUES		REVENUE REPORT							6/3/13
		8 MONTHS ENDING 05/31/13							
		.....CURRENT.....			.....YEAR-TO-DATE.....			ANNUAL	UNREALIZED
	OBJ/SUB	ESTIMATED	ACTUAL	%REV	ESTIMATED	ACTUAL	%REV	ESTIMATE	BALANCE
	---	---	---	---	---	---	---	---	---
NOTE PROCEEDS									
	---	---	---	---	---	---	---	---	---
NON-REVENUE RECEIPTS									
BEGINNING CASH BALANCE	399A								
APPROPRIABLE FUND BALAN	3999	7,142			57,143			85,715	85,715
	---	---	---	---	---	---	---	---	---
BEGINNING CASH BALANC		**7,142**			**57,143**			**85,715**	**85,715**
	---	---	---	---	---	---	---	---	---
REVENUES		**9,191**	**9**		**73,529**	**29,537**	**40%**	**110,294**	**80,757**

		CITY OF HATTIESBURG							. 69
098098 - K.P.ZOO CAPITAL REVENUES		REVENUE REPORT							6/3/13
		8 MONTHS ENDING 05/31/13							
		.....CURRENT.....			.....YEAR-TO-DATE.....			ANNUAL	UNREALIZED
	OBJ/SUB	ESTIMATED	ACTUAL	%REV	ESTIMATED	ACTUAL	%REV	ESTIMATE	BALANCE
REVENUES	200								
INTER-GOVERNMNTL REVENUE	230A								
STATE GRANTS	250B								
ZOO IMPROVEMENTS	2560								
	----------	----------	---------	----	----------	---------	----	----------	----------
STATE GRANTS									
CHARGES FOR SERVICES	280A								
CULTURE AND RECREATION	3100								
KPZ SPECIAL EVENTS	3127								
LION/TIGER FUND RAISE	3127 01								
TODDLER CLASS	3127 02								
ZOO CAMP	3127 03								
	----------	----------	---------	----	----------	---------	----	----------	----------
KPZ SPECIAL EVENTS									
	----------	----------	---------	----	----------	---------	----	----------	----------
CULTURE AND RECREATI									
	----------	----------	---------	----	----------	---------	----	----------	----------
CHARGES FOR SERVICES									
MISCELLANEOUS	340A								
INTEREST EARNINGS	3400								
CERTIFICATES OF DEPOSI	3402								
DIVIDENDS	3404								
SAVINGS ACCOUNT/MMA	3405		1			38			(38)
	----------	----------	---------	----	----------	---------	----	----------	----------
INTEREST EARNINGS			**1**			**38**			**(38)**
CONTRIBUTIONS-PUBLIC	3450								
CONTRIBUTIONS-FORREST	3455								
	----------	----------	---------	----	----------	---------	----	----------	----------
CONTRIBUTIONS-PUBLIC									
CONTRIBUTIONS-PRIVATE	3460								
CONTRIB-H'BURG. CONV.	3465								
CONTRIB-CEMETERY PROJ	3467								
CONTRIB-PKS/REC. PROJ	3468								
CONTRIB-OTHER	3469								
	----------	----------	---------	----	----------	---------	----	----------	----------
CONTRIBUTIONS-PRIVAT									
GAIN ON SALE OF INVESTM	3550								

		CITY OF HATTIESBURG							. 69
098098 - K.P.ZOO CAPITAL REVENUES		REVENUE REPORT							6/3/13
		8 MONTHS ENDING 05/31/13							
		.....CURRENT.....			.....YEAR-TO-DATE.....			ANNUAL	UNREALIZED
	OBJ/SUB	ESTIMATED	ACTUAL	%REV	ESTIMATED	ACTUAL	%REV	ESTIMATE	BALANCE
MISCELLANEOUS			**1**			**38**			**(38)**
TRANSFERS	380A								
TRANSFERS FROM OTHR FND	3800								
T/F GENERAL FUND	3800 01								
TRANSFERS FROM OTHR									
TRANSFERS									
NON-REVENUE RECEIPTS	390A								
SALE OF TIMBER	3923								
SALE OF SCRAP MATERIAL	3943								
SALE OF ZOOLOGICAL ANIM	3949								
REFUND & RECOVERY	3965								
NON-REVENUE RECEIPTS									
BEGINNING CASH BALANCE	399A								
APPROPRIABLE FUND BALAN	3999	7,174			57,398			86,097	86,097
BEGINNING CASH BALANC		**7,174**			**57,398**			**86,097**	**86,097**
REVENUES		**7,174**	**1**		**57,398**	**38**		**86,097**	**86,059**

		CITY OF HATTIESBURG							. 71
099099 - 2010 W & SGO BOND REVENUES		REVENUE REPORT							6/3/13
		8 MONTHS ENDING 05/31/13							
		.....CURRENT.....			.....YEAR-TO-DATE.....			ANNUAL	UNREALIZED
	OBJ/SUB	ESTIMATED	ACTUAL	%REV	ESTIMATED	ACTUAL	%REV	ESTIMATE	BALANCE
REVENUES	200								
INTER-GOVERNMNTL REVENUE	230A								
FEDERAL GRANTS	230B								
US CORPS OF ENGR PROJEC	2354	87,470			699,767	781,453	111%	1,049,651	268,198
EPA-VETERANS DRIVE PROJ	2356								
FEDERAL GRANTS		**87,470**			**699,767**	**781,453**	**111%**	**1,049,651**	**268,198**
MISCELLANEOUS	340A								
INTEREST EARNINGS	3400								
CERTIFICATES OF DEPOSI	3402								
SAVINGS ACCOUNT/MMA	3405		38			294			(294)
REPURCHASE AGREEMENTS	3408								
TREASURY NOTES	3409								
INTEREST EARNINGS			**38**			**294**			**(294)**
MISCELLANEOUS			**38**			**294**			**(294)**
NON-REVENUE RECEIPTS	390A								
SALE OF BONDS	3910								
BOND PROCEEDS	3912								
ACCRUED INTEREST	3915								
SALE OF BONDS									
NON-REVENUE RECEIPTS									
BEGINNING CASH BALANCE	399A								
APPROPRIABLE FUND BALAN	3999	15,107			120,861			181292-	(181,292)
BEGINNING CASH BALANC		**15,107**			**120,861**			**181292-**	**(181,292)**
REVENUES		**72,363**	**38**		**578,906**	**781,747**	**135%**	**868,359**	**86,612**

		CITY OF HATTIESBURG							. 72
105105 - 2006 W&S BOND CONSTR REVENUES		REVENUE REPORT							6/3/13
		8 MONTHS ENDING 05/31/13							
		.....CURRENT.....			.....YEAR-TO-DATE.....			ANNUAL	UNREALIZED
	OBJ/SUB	ESTIMATED	ACTUAL	%REV	ESTIMATED	ACTUAL	%REV	ESTIMATE	BALANCE
REVENUES	200								
MISCELLANEOUS	340A								
INTEREST EARNINGS	3400								
CERTIFICATES OF DEPOSI	3402								
SAVINGS ACCOUNT/MMA	3405								
REPURCHASE AGREEMENTS	3408								
TREASURY NOTES	3409								
	----------	----------	---------	----	----------	---------	----	----------	----------
INTEREST EARNINGS									
	----------	----------	---------	----	----------	---------	----	----------	----------
MISCELLANEOUS									
NON-REVENUE RECEIPTS	390A								
SALE OF BONDS	3910								
BOND PROCEEDS	3912								
ACCRUED INTEREST	3915								
	----------	----------	---------	----	----------	---------	----	----------	----------
SALE OF BONDS									
	----------	----------	---------	----	----------	---------	----	----------	----------
NON-REVENUE RECEIPTS									
BEGINNING CASH BALANCE	399A								
APPROPRIABLE FUND BALAN	3999								
	----------	----------	---------	----	----------	---------	----	----------	----------
BEGINNING CASH BALANC									
	----------	----------	---------	----	----------	---------	----	----------	----------
REVENUES									

		CITY OF HATTIESBURG							. 73
107107 - SPEC.SALESTAX REVENUES		REVENUE REPORT							6/3/13
		8 MONTHS ENDING 05/31/13							
		.....CURRENT.....			.....YEAR-TO-DATE.....			ANNUAL	UNREALIZED
	OBJ/SUB	ESTIMATED	ACTUAL	%REV	ESTIMATED	ACTUAL	%REV	ESTIMATE	BALANCE
REVENUES	200								
INTER-GOVERNMNTL REVENUE	230A								
STATE-SHARED REVENUE	260B								
SALES TAX-MOTEL	2605		46,470			305,816			(305,816)
SALES TAX-FOOD & BEVERA	2607		427,468			2,988,861			(2,988,861)
	----------	----------	---------	----	----------	---------	----	----------	----------
STATE-SHARED REVENUE			**473,938**			**3,294,677**			**(3,294,677)**
NON-REVENUE RECEIPTS	390A								
	----------	----------	---------	----	----------	---------	----	----------	----------
REVENUES			**473,938**			**3,294,677**			**(3,294,677)**

		CITY OF HATTIESBURG							. 74
108108 - UDAG-PAYBACK REVENUES		REVENUE REPORT							6/3/13
		8 MONTHS ENDING 05/31/13							
		.....CURRENT.....			.....YEAR-TO-DATE.....			ANNUAL	UNREALIZED
	OBJ/SUB	ESTIMATED	ACTUAL	%REV	ESTIMATED	ACTUAL	%REV	ESTIMATE	BALANCE
REVENUES	200								
STATE GRANTS	250B								
BEAUTIFICATION-VARIOUS	2522								
	----------	----------	---------	----	----------	---------	----	----------	----------
STATE GRANTS									
MISCELLANEOUS	340A								
INTEREST EARNINGS	3400								
CERTIFICATES OF DEPOSI	3402								
SAVINGS ACCOUNT/MMA	3405								
	----------	----------	---------	----	----------	---------	----	----------	----------
INTEREST EARNINGS									
RENTS AND ROYALTIES	3410								
PARKING GARAGE-CIVIC C	3415								
PARKING GARAGE-PINE ST	3416								
	----------	----------	---------	----	----------	---------	----	----------	----------
RENTS AND ROYALTIES									
	----------	----------	---------	----	----------	---------	----	----------	----------
MISCELLANEOUS									
TRANSFERS	380A								
TRANSFERS FROM OTHR FND	3800								
T/F GENERAL FUND	3800 01								
	----------	----------	---------	----	----------	---------	----	----------	----------
TRANSFERS FROM OTHR									
	----------	----------	---------	----	----------	---------	----	----------	----------
TRANSFERS									
NON-REVENUE RECEIPTS	390A								
SALE OF REAL ESTATE	3920								
	----------	----------	---------	----	----------	---------	----	----------	----------
NON-REVENUE RECEIPTS									
BEGINNING CASH BALANCE	399A								
APPROPRIABLE FUND BALAN	3999								
	----------	----------	---------	----	----------	---------	----	----------	----------
BEGINNING CASH BALANC									
	----------	----------	---------	----	----------	---------	----	----------	----------
REVENUES									

		CITY OF HATTIESBURG							. 75
109109 - GROUP INS.TRUST REVENUES		REVENUE REPORT							6/3/13
		8 MONTHS ENDING 05/31/13							
		.....CURRENT.....			.....YEAR-TO-DATE.....			ANNUAL	UNREALIZED
	OBJ/SUB	ESTIMATED	ACTUAL	%REV	ESTIMATED	ACTUAL	%REV	ESTIMATE	BALANCE
REVENUES	200								
MISCELLANEOUS	340A								
INTEREST EARNING	3400								
SAVINGS ACCOUNT/MMA	3405		16			174			(174)
INTEREST EARNING			**16**			**174**			**(174)**
MISCELLANEOUS			**16**			**174**			**(174)**
TRANSFERS	380A								
TRANSFERS FROM OTHR FND	3800								
T/F GENERAL FUND	3800 01								
TRANSFERS FROM OTHR									
TRANSFERS									
NON-REVENUE RECEIPTS	390A								
REFUND & RECOVERY	3965					262			(262)
HOSP.INS.-P/R DISTRIB	3966		511,910			2,632,582			(2,632,582)
HOSP.INS.-COBRA	3966 01		879			11,464			(11,464)
NON-REVENUE RECEIPTS			**512,789**			**2,644,308**			**(2,644,308)**
REVENUES			**512,806**			**2,644,482**			**(2,644,482)**

City of Hattiesburg, MS

200 Forrest St.
P.O. Box 1898
Hattiesburg, MS 39401

Master

File Number: 2013-0301

File ID:	2013-0301	**Type:**	Regular Agenda Item	**Status:**	Agenda Ready
Version:	1	**Reference:**		**In Control:**	City Council
				File Created:	05/28/2013
Brief Title:	Acknowledge receipt of two bid purchase docket for the period of March 26, 2013 through May 27, 2013			**Final Action:**	
				Minute Book Number:	MB2013-162

Title:

Acknowledge receipt of two bid purchase docket for the period of March 26, 2013 through May 27, 2013 as provided for in Section 31-7-13 (b) of the Mississippi Code of 1972.

Notes:

Sponsors:		**Enactment Date:**	
Attachments:	06-04-Two Quote Docket	**Enactment Number:**	
Contact:		**Meeting Date:**	06/04/2013
Drafter:		**Effective Date:**	

History of Legislative File

Version:	Acting Body:	Date:	Action:	Sent To:	Due Date:	Return Date:	Result:
1	City Council	06/04/2013					

Text of Legislative File 2013-0301

Title

Acknowledge receipt of two bid purchase docket for the period of March 26, 2013 through May 27, 2013 as provided for in Section 31-7-13 (b) of the Mississippi Code of 1972.

Summary

Acknowledge receipt of two bid purchase docket for the period of March 26, 2013 through May 27, 2013

Mayor
Johnny L. DuPree, Ph.D.

Council - Ward 1	Council - Ward 2	Council - Ward 3	Council - Ward 4	Council - Ward 5
Kim Bradley	*Deborah Denard Delgado*	*Carter Carroll*	*Dave J. Ware, II*	*Henry Naylor*

MEMORANDUM

TO: Mayor and Council

FROM: Michael Pope, Purchasing Department

DATE: May 28, 2013

SUBJECT: Unadvertised Bid Docket Acknowledgment

Attached is the purchase docket for the period of March 26, 2013, through May 27, 2013 covering purchases requiring the obtaining of a minimum of two bids as defined in Section 31-7-13 (B) of the Mississippi Code.

This report is submitted for your review and acknowledgment on the minutes of the City Council. Should there be any questions, please do not hesitate to contact my office.

MAP

SUCCESSFUL BID/ OTHER BID	BID RECEIVED	BID AWARDED	BID AMOUNT	PURCHASE ORDER	ITEM DESCRIPTION
TOUCHSTONE MOTOR SALES INC	04/26/13	04/26/13	20,100.00	132903	UNIT # 13519/# 15930-REPLACEMENT-DESTROYED
WARD MOTOR CO	04/26/13	04/26/13	20,700.00		
IRBY, STUART C CO	05/02/13	05/02/13	23,850.00	133009	DOWNTOWN H'BURG LED RETROFIT KITS
SHAMROCK ELECTRIC	05/02/13	05/02/13	24,750.00		
ADCOCK POOLS AND SPA	05/02/13	05/02/13	6,029.28	133014	MCNAIR/DAHMER/CE ROY POOLS-CHEMICALS
TROPICAL POOL AND SPAS LLC	05/02/13	05/02/13	6,062.04		
LARK POOL (S&T ASSOC)	05/02/13	05/02/13	6,550.44		
MINGLEDORFF'S INC	05/09/13	05/09/13	6,100.97	133190	MINI-SPLIT A/C TRAFFIC OFFICE
SOUTHERN PIPE & SUPPLY CO INC	05/09/13	05/09/13	7,063.88		
CHAIN ELECTRIC COMPANY	05/16/13	05/16/13	25,800.00	133456	WATER PLANT #2 MODIFICATIONS TO MOTOR CONTR
CONTROL SYSTEMS INC	05/16/13	05/16/13	27,884.00		

BILL TO:
CITY OF HATTIESBURG
ACCOUNTING DEPT
PO BOX 1898
HATTIESBURG, MS 39403-1898
FAX INVOICE TO: 601-584-4895

CITY OF HATTIESBURG
P U R C H A S E O R D E R

THE CITY IS NOT LIABLE FOR SALES TAX ID# 64-6000432

POINT OF CONTACT:

JONES, ANN (601) 5454661

Page - 1
Date - 04/26/13

PO No. - 132903
Req No. - 1940

VENDOR MAILING:
TOUCHSTONE MOTOR SALES INC
1801 CORINNE ST
HATTIESBURG MS 39401-6322

VENDOR # 00070283

SHIP TO :
CITY OF HATTIESBURG
MERCHANDISE ORDERED WILL BE PICKED UP

PROCESSING CODE:

PROJECT LINE: UNIT # 13519/# 15930-REPLACEMENT-DESTROYED 4/14/13

SEND METHOD 1 (601)5832266

Account #	Description	QTY	UM	UNIT COST	TOTAL COST
077650.7400	2009 OR NEWER CARGO VAN WHITE COLOR 115,000 or LESS MILES, 4-WHEEL ABS, POWER STEERING, AUTOMATIC TRANSMISSION	1.00	EA	8,950.0000	8,950.00
077650.7400	2008 OR NEWER CARGO VAN WHITE COLOR 60,000 OR LESS MILES, 4-WHEEL ABS POWER STEERING, AUTOMATIC TRANSMISSION	1.00	EA	11,150.0000	11,150.00

TOTAL CONTRACT AMOUNT NOT TO EXCEED 20,100.00

SUBMIT SEPARATE INVOICES FOR EACH ORDER. PREPAY SHIPPING CHARGES IF ANY AND ADD TO INVOICE.

THIS PO NUMBER MUST APPEAR ON ALL PACKAGES & INVOICES.

FOR CORRECTIONS TO VENDOR ADDRESS ABOVE, CONTACT ACCOUNTING (601) 545-4686.

EDDIE R. MYERS
CITY CLERK

43530

CITY OF HATTIESBURG
QUOTE REQUEST RESPONSE FORM

Page No. 1
Date - 4/23/13
Order Number . . 1940 00

TOUCHSTONE MOTOR SALES IN
1801 CORINNE ST
HATTIESBURG MS 39401-6322

Mail To. . . . . CITY OF HATTIESBURG
PURCHASING DIVISION
220 W FRONT ST.2ND FLOOR
PO BOX 1898
HATTIESBURG MS 39401

Phone Number . . 601 5456512

PRINTED NAME Cherryl Dyan

SIGNATURE Cherryl Dy DATE 4-23-13

Shipping terms are F.O.B. destination, freight prepaid

PROJECT LINE: UNIT # 13519/# 15930-REPLACEMENT-DESTROYED 4/14/13

ITEM DESCRIPTION	Request Date	QTY	UM	Unit Price	Extended Cost	Delivery Date	Expired Date
2009 OR NEWER Cargo Van, white color, 115,000 or less miles, 4-wheel ABS, Power Steering, Automatic Transmission Replaces Unit # 13519 Destroyed 4/14/13 Case #20130400009	04/23/13	1.00	EA	$8,950	N/A	~~N/A~~ 4-23-13	4-30-13
2008 OR NEWER Cargo Van, White Color, 60,000 or less miles, 4-Wheel ABS Power Steering, Automatic Transmission Replaces Unit # 15930 Destroyed 4/14/13 Case #20130400009	04/23/13	1.00	EA	$11,150 20,100	N/A	~~N/A~~ 4-23-13	4-30-13

TOTAL BID PRICE $20,100.00

RECEIVED
APR 26 2013
Verlina Underwood
AWARDED

4-25-13

APR-23-2013 14:52 FROM:
APR-23-2013(TUE) 11:48
TO:6015456661 P.2

PAGE 03
P.002/003
CITY OF HBURG
04/25/2013 12:12 6015456669
APR-25-2013(THU) 11:47
APR-23-2013(TUE) 13:01
P.003/003

43530

CITY OF HATTIESBURG
QUOTE REQUEST RESPONSE FORM

Page No. 1
Date - 4/23/13
Order Number . . 1940 CQ

WARD AUTO SALES
4979 OLD HWY 11
HATTIESBURG MS 39402

Mail To. . . . . CITY OF HATTIESBURG
PURCHASING DIVISION
220 W FRONT ST.2ND FLOOR
PO BOX 1898
HATTIESBURG MS 39401

Phone Number . . 601 5459512

PRINTED NAME Ward motor Co

SIGNATURE R W Ward DATE 4/24/13

Shipping terms are F.O.B. destination, freight prepaid

PROJECT LINE: UNIT # 13519/# 15930-REPLACEMENT-DESTROYED 4/14/13

ITEM DESCRIPTION	Request Date	QTY	UM	Unit Price	Extended Cost	Delivery Date	Expired Date
2009 OR NEWER Cargo Van, white color, 215,000 or less miles, 4-wheel ABS, Power Steering, Automatic Transmission Replaces Unit # 13519 Destroyed 4/14/13 Case #20130400009	04/23/13	1.00	EA	9200	—	—	5/24/13
2008 OR NEWER Cargo Van, White Color, 60,000 or less miles, 4-Wheel ABS Power Steering, Automatic Transmission Replaces Unit # 15930 Destroyed 4/14/13 Case #20130400005	04/23/13	1.00	EA	11,500	—	—	5/24/13

RECEIVED
APR 26 2013

RECEIVED
MAR 26 2013

TOTAL BID PRICE $20,700.00

BILL TO:
CITY OF HATTIESBURG
ACCOUNTING DEPT
PO BOX 1898
HATTIESBURG, MS 39403-1898
FAX INVOICE TO: 601-584-4895

CITY OF HATTIESBURG
P U R C H A S E O R D E R
THE CITY IS NOT LIABLE FOR SALES TAX ID# 64-6000432

POINT OF CONTACT:

Page - 1
Date - 05/02/13

PO No. - 133009

Req No. - 1941

VENDOR MAILING:
STUART C IRBY CO
1314 W PINE ST
HATTIESBURG MS 39401-6338

PONDER, MATTIE (601) 5454626

VENDOR # 90001647

SHIP TO :
CITY OF HATTIESBURG
TRAFFIC/CONSTRUCTION
125 WALNUT ST
HATTIESBURG MS 39401

PROCESSING CODE:

SEND METHOD 1 (601)5453178

PROJECT LINE: DOWNTOWN H'BURG LED RETROFIT KITS

Account #	Description	QTY	UM	UNIT COST	TOTAL COST
001207.5991.02	7882 SYL LED 70 RETROFIT/750/T5M/D6 HP KIT	45.00	EA	530.0000	23,850.00

TOTAL CONTRACT AMOUNT NOT TO EXCEED 23,850.00

SUBMIT SEPARATE INVOICES FOR EACH ORDER. PREPAY SHIPPING CHARGES IF ANY AND ADD TO INVOICE.

THIS PO NUMBER MUST APPEAR ON ALL PACKAGES & INVOICES.

FOR CORRECTIONS TO VENDOR ADDRESS ABOVE, CONTACT ACCOUNTING (601) 545-4686.

EDDIE R. MYERS
CITY CLERK

43530

CITY OF HATTIESBURG
COVER REQUEST RESPONSE FORM

Page No. 1
Date 4/26/13
Order Number . . 1941 OR

STUART C IRBY CO
1114 W PINE ST
HATTIESBURG MS 39401-6318

Mail To. . . . . CITY OF HATTIESBURG
PURCHASING DIVISION
220 E FRONT ST.2ND FLOOR
PO BOX 1898
HATTIESBURG MS 39401

Phone Number . . 601 5454512

PRINTED NAME Tammy Sledge DATE 4-29-13

SIGNATURE Tammy Sledge

Shipping terms are F.O.B. destination, freight prepaid

PROJECT LANE: DOWNTOWN H'BURG 12D RETROFIT KITS

ITEM	DESCRIPTION	Request Date	QTY	UM	Unit Price	Extended Price	Delivery Date	Expired Date
7882	SYL LED 70 RETROFIT/75D/T5M/D5 HP KIT	04/23/13	45.00	EA	530.00	23850.00	6-13-13	7-31-13

TOTAL BID PRICE 23850.00

RECEIVED
MAY - 2 2013
AWARDED

CITY OF HATTIESBURG
QUOTE REQUEST RESPONSE FORM

Page No. 1
Date - 4/29/13
Order Number . . 1941 OQ

SHAMROCK ELECTRIC
1215 SUNSET DRIVE
GRENADA MS 38901-4025

Mail To. . . . . CITY OF HATTIESBURG
PURCHASING DIVISION
220 W FRONT ST.2ND FLOOR
PO BOX 1898
HATTIESBURG MS 39401

PRINTED NAME JACKIE BROGAN

Phone Number . . 601 545-4512

SIGNATURE Jackie Brogan DATE 4/29/2013 Shipping terms are F.O.B. destination, freight prepaid

PROJECT LINE: DOWNTOWN H'BURG LED RETROFIT KITS

ITEM DESCRIPTION	Request Date	QTY	UM	Unit Price	Extended Cost	Delivery Date	Expired Date
7882 SYL LED 70 RETROFIT/750/T5M/D6 HP KIT	04/23/13	45.00	EA	550.00 Each	24,750.00	6-8 WKS	6-25-13

TOTAL BID PRICE 24,750.00

RECEIVED
MAY - 2 2013

p.3
P. 003/003
662-226-4332
shamrock Electric Supply
APR-29-2013(MON) 11:58

BILL TO:
CITY OF HATTIESBURG
ACCOUNTING DEPT
PO BOX 1898
HATTIESBURG, MS 39403-1898
FAX INVOICE TO: 601-584-4895

CITY OF HATTIESBURG
P U R C H A S E O R D E R

THE CITY IS NOT LIABLE FOR SALES TAX ID# 64-6000432

POINT OF CONTACT:

Page - 1
Date - 05/02/13
PO No. - 133014
Req No. - 1939

VENDOR MAILING:
ADCOCK AND ADCOCK INC
ADCOCK POOLS AND SPA
6192 US HIGHWAY 98 W
HATTIESBURG MS 39402-8530

JONES, ANN (601) 5454661

VENDOR # 00001014

SHIP TO :
CITY OF HATTIESBURG
SEE BELOW FOR DELIVERY

PROCESSING CODE:

PROJECT LINE: MCNAIR/DAHMER/CE ROY POOLS-CHEMICALS

SEND METHOD 0 ( )

Account #	Description	QTY	UM	UNIT COST	TOTAL COST
002315.5130	50LB 3" CHLORINE Tablets	24.00	EA	159.0000	3,816.00
002315.5130	100LB GRANULAR Chlorine	6.00	EA	189.0000	1,134.00
002315.5130	QUART SUPER BLUE	36.00	EA	10.9900	395.64
002315.5130	QUART ALGECIDE	36.00	EA	18.9900	683.64

CITY OF HATTIESBURG MISSISSIPPI 1884

TOTAL CONTRACT AMOUNT NOT TO EXCEED 6,029.28

SUBMIT SEPARATE INVOICES FOR EACH ORDER. PREPAY SHIPPING CHARGES IF ANY AND ADD TO INVOICE.

THIS PO NUMBER MUST APPEAR ON ALL PACKAGES & INVOICES.

FOR CORRECTIONS TO VENDOR ADDRESS ABOVE, CONTACT ACCOUNTING (601) 545-4686.

EDDIE R. MYERS
CITY CLERK

43530

CITY OF HATTIESBURG
QUOTE REQUEST RESPONSE FORM

Page No. 1
Date - 4/15/13
Order Number . . 1939 QQ

ADCOCK AND ADCOCK INC
ADCOCK POOLS AND SPA
6192 US HIGHWAY 98 W
HATTIESBURG MS 39402-8530

Mail To. . . . . CITY OF HATTIESBURG
PURCHASING DIVISION
220 W FRONT ST.2ND FLOOR
PO BOX 1898
HATTIESBURG MS 39401

PRINTED NAME CATHY KEITH

Phone Number . . 601 5454512

SIGNATURE Cathy Keith DATE 04/18/13

Shipping terms are F.O.B. destination, freight prepaid

PROJECT LINE: MCNAIR/DAHMER/CE ROY POOLS-CHEMICALS

ITEM DESCRIPTION	Request Date	QTY	UM	Unit Price	Extended Cost	Delivery Date	Expired Date
50LB 3" CHLORINE Tablets	04/10/13	24.00	EA	159.00	3816.00	5/03/13	9/31/13
100LB GRANULAR Chlorine	04/10/13	6.00	EA	189.00	1134.00	5/03/13	8/31/13
QUART SUPER BLUE	04/10/13	36.00	EA	10.49	377.64	5/03/13	8/31/13
QUART ALGECIDE (Per Cathy Keith 4/25/13)	04/10/13	36.00	EA	18.99	683.64	5/03/13	8/31/13

BIO-GUARD BACK-UP ALGECIDE

TOTAL BID PRICE 6029.28

4/23/13

RECEIVED
MAY -2 2013
Verlina Underwood
AWARDED

RECEIVED
MAY -2 2013

P. 003/004
p.1
6015797386
APR-23-2013(TUE) 07:21
Tropical Pools and Spas
04/23/2013 08:52 6015400869 CITY OF HBURG PAGE 03

43530

CITY OF HATTIESBURG
QUOTE REQUEST RESPONSE FORM

Page No. 1
Date 4/15/13
Order Number . . 1939 00

TROPICAL POOL AND SPAS LL
6414 US HWY 98 W STE #10
HATTIESBURG MS 39402

Mail To. . . . . CITY OF HATTIESBURG
PURCHASING DIVISION
220 W FRONT ST.2ND FLOOR
PO BOX 1898
HATTIESBURG MS 39401

PRINTED NAME Tropical Pools & Spas LLC

Phone Number . . 601 5454512

SIGNATURE Samtha Waites DATE 4-22-13

Shipping terms are F.O.B. destination, freight prepaid

PROJECT LINE: MCNAIR/DAHMER/CE ROY POOLS-CHEMICALS

ITEM DESCRIPTION	Request Date	QTY	UM	Unit Price	Extended Cost	Delivery Date	Expired Date
50LB 3" CHLORINE Tablets	04/10/13	24.00	EA	$149.00	$3,576.00		
100LB GRANULAR Chlorine	04/10/13	6.00	EA	$199.00	$1,194.00		
QUART SUPER BLUE	04/10/13	36.00	EA	$13.90	$500.40		
QUART ALGECIDE - Algae Kill II	04/10/13	36.00	EA	$21.99	$791.64		

TOTAL BID PRICE $6,062.04

RECEIVED
MAY - 2 2013

43530

CITY OF HATTIESBURG
QUOTE REQUEST RESPONSE FORM

Page No. 1
Date - 4/22/13
Order Number . . 1939 OQ

S & T ASSOCIATES
592 JACKSON RD
HATTIESBURG MS 39402-9626

Mail To. . . . . CITY OF HATTIESBURG
PURCHASING DIVISION
220 W FRONT ST.2ND FLOOR
PO BOX 1898
HATTIESBURG MS 39401

Phone Number . . 601 5454512

PRINTED NAME Kim Harper

SIGNATURE Kim Harper DATE 4-22-13 Shipping terms are F.O.B. destination, freight prepaid

PROJECT LINE: MCNAIR/DAHMER/CE RDY POOLS-CHEMICALS

ITEM DESCRIPTION	Request Date	QTY	UM	Unit Price	Extended Cost	Delivery Date	Expired Date
50LB 3" CHLORINE Tablets	04/10/13	24.00	EA	171.05	$4105.20		
100LB GRANULAR Chlorine	04/10/13	6.00	EA	194.06	$1164.36		
QUART SUPER BLUE	04/10/13	36.00	EA	15.64	$563.04		
QUART ALGECIDE	04/10/13	36.00	EA	$19.94 Aqua Zone	$717.84		

TOTAL BID PRICE 6,550.44

RECEIVED
MAY - 2 2013

Mayor
Johnny L. DuPree, Ph.D.

Council - Ward 1	Council - Ward 2	Council - Ward 3	Council - Ward 4	Council - Ward 5
Kim Bradley	*Deborah Denard Delgado*	*Carter Carroll*	*Dave J. Ware, II*	*Henry Naylor*

TO: Verlina Underwood, Purchasing Manger

FROM: Ann Jones, Recreation Maintenance, General Manager

DATE: April 30, 2013

RE: 2-Quote Requisition # 1939-Algecide Confirmation

In reference to the discrepancy between brands bid for providing 36 Quarts of Algaecide, I have reviewed the MSDS sheets for Bioguard Backup bid by Adcock Pool and Arch AlgaeKill II bid by Tropical Pool. Lark Pool bid Aqua Zone Algaecide but has not provided documentation pertaining to their product after numerous requests. I have found that Bioguard Backup and AlgeaKill II both meet our specification for algaecide.

If you need additional information, please just let me know.

MAJ/

BILL TO:
CITY OF HATTIESBURG
ACCOUNTING DEPT
PO BOX 1898
HATTIESBURG, MS 39403-1898
FAX INVOICE TO: 601-584-4895

CITY OF HATTIESBURG
P U R C H A S E O R D E R

THE CITY IS NOT LIABLE FOR SALES TAX ID# 64-6000432

POINT OF CONTACT:

Page - 1
Date - 05/09/13
PO No. - 133190
Req No. - 1942

VENDOR MAILING:
MINGLEDORFF'S INC
ACCT #1197
1851 LINCOLN RD
HATTIESBURG MS 39402-3228

SHOEMAKE, SHANNON (601) 5454626
MINUTE BOOK # PENDING
VENDOR # 90087471

SHIP TO :
CITY OF HATTIESBURG
MERCHANDISE ORDERED WILL BE PICKED UP

PROCESSING CODE:

PROJECT LINE: MINI-SPLIT A/C TRAFFIC OFFICE

SEND METHOD 1 (601)5799673

Account #	Description	QTY	UM	UNIT COST	TOTAL COST
001191.5990	MITMLS143812T50 1/4X3/8X1/2X50 COPPER INSULATED LINE SET	1.00	EA	130.3600	130.36
001191.5990	MITMHK1 WIRELESS WALL MOUNT REMOTE	2.00	EA	167.6500	335.30
001191.5990	MITMXZ8B48NA 15 SEER 48K BTU 8 ZONE HP	1.00	EA	3,144.1200	3,144.12
001191.5990	MITPACKAKA51BC 5 PORT BRANCH BOX	1.00	EA	561.7700	561.77
001191.5990	MITPLAA12BA4 13.5 SEER 12K BTU INDOOR CEILING CASSETTE	2.00	EA	964.7100	1,929.42

TOTAL CONTRACT AMOUNT NOT TO EXCEED 6,100.97

SUBMIT SEPARATE INVOICES FOR EACH ORDER. PREPAY SHIPPING CHARGES IF ANY AND ADD TO INVOICE.

THIS PO NUMBER MUST APPEAR ON ALL PACKAGES & INVOICES.

FOR CORRECTIONS TO VENDOR ADDRESS ABOVE, CONTACT ACCOUNTING (601) 545-4686.

EDDIE R. MYERS
CITY CLERK

43530

CITY OF HATTIESBURG
QUOTE REQUEST RESPONSE FORM

Page No. 1
Date - 5/06/13
Order Number . . 1942 00

MINGLEDORFF'S INC
ACCT #1197
1851 LINCOLN RD
HATTIESBURG MS 39402-3228

Mail To. . . . . CITY OF HATTIESBURG
PURCHASING DIVISION
220 W FRONT ST.2ND FLOOR
PO BOX 1898
HATTIESBURG MS 39401

PRINTED NAME Jason Pittman

Phone Number . . 601 5454612

SIGNATURE Jason Pittman DATE 5/6/13

Shipping terms are F.O.B. destination, freight prepaid

PROJECT LINE: MINI-SPLIT A/C TRAFFIC OFFICE

ITEM DESCRIPTION	Request Date	QTY	UM	Unit Price	Extended Cost	Delivery Date	Expire Date
MITMLS143812TS0 1/4X3/8X1/2X50 COPPER INSULATED LINE SET	05/03/13	1.00	EA	$130.36	$130.36	5-7-13	6-6-13
MITMHK1 WIRELESS WALL MOUNT REMOTE	05/03/13	2.00	EA	$167.65	$335.~~29~~ 30	5-7-13	6-6-13
MITMKZ8048NA 15 SEER 48K BTU 8 ZONE HP	05/03/13	1.00	EA	$3,144.12	$3,144.12	5-7-13	6-6-13
MITPACKAKA51BC 5 PORT BRANCH BOX	05/03/13	1.00	EA	$561.77	$561.77	5-7-13	6-6-13
MITPLAA12BA4 13.5 SEER 12K BTU INDOOR CEILING CASSETTE	05/03/13	2.00	EA	$964.71	$1929.~~44~~ 42	5-7-13	6-6-13

TOTAL BID PRICE $6,100.~~94~~ 97

RECEIVED
MAY - 9 2013
Verlina Underwood
AWARDED

FROM Mingledorff Hattiesburg, MS (MON)MAY 2013 6:05/ST. 6:04/No. 6015454620 P 0

CITY OF HATTIESBURG
QUOTE REQUEST RESPONSE FORM

Page No. 1
Date - 5/06/13
Order Number . . 1942 OQ

SOUTHERN PIPE & SUPPLY CO
116 LUNDY LN
HATTIESBURG MS 39401

Mail To. . . . . CITY OF HATTIESBURG
PURCHASING DIVISION
220 W FRONT ST.2ND FLOOR
PO BOX 1898
HATTIESBURG MS 39401

Phone Number . . 601 5454512

Keenan Stevens

Keenan Stevens DATE 5-6-13

Shipping terms are F.O.B. destination, freight prepaid

: MINI-SPLIT A/C TRAFFIC OFFICE

ITEM DESCRIPTION	Request Date	QTY	UM	Unit Price	Extended Cost	Delivery Date	Expired Date
12T50 1/2X50 COPPER INSULATED LINE SET	05/03/13	1.00	EA	148.92	148.92		
ELESS NT REMOTE	05/03/13	2.00	EA	173.38	346.76	5-15	12-31
NA 18K BTU 8 ZONE HP	05/03/13	1.00	EA	3263.00	3263.00	5-15	12-31
51BC RANCH BOX	05/03/13	1.00	EA	599.00	599.00	5-15	12-31
44 12K BTU INDOOR CEILING CASSETTE	05/03/13	2.00	EA	1353.10	2706.20	5-15	12-31

TOTAL BID PRICE 7063.88

RECEIVED
MAY - 9 2013

p.1
6015838844
Southern Pipe And Supply
May 06 13 01:38p

BILL TO:
CITY OF HATTIESBURG
ACCOUNTING DEPT
PO BOX 1898
HATTIESBURG, MS 39403-1898
FAX INVOICE TO: 601-584-4895

CITY OF HATTIESBURG
P U R C H A S E O R D E R

THE CITY IS NOT LIABLE FOR SALES TAX ID# 64-6000432

POINT OF CONTACT:

Page - 1
Date - 05/16/13
PO No. - 133456
Req No. - 1944

VENDOR MAILING:
CHAIN ELECTRIC COMPANY
PO BOX 2058
HATTIESBURG MS 39403-2058

WILLIAMS, TERESA (601) 5454630
MINUTE BOOK # PENDING
VENDOR # 00015051

SHIP TO :
CITY OF HATTIESBURG
WATER PLANT #2
900 JAMES STREET
HATTIESBURG MS 39401

PROCESSING CODE:

PROJECT LINE: WATER PLANT #2 MODIFICATIONS TO MOTOR CONTROL CENTER

SEND METHOD 1 (601)5848320

Account #	Description	QTY	UM	UNIT COST	TOTAL COST
009673.6355	WATET PLANT #2 MODIFICATIONS TO MOTOR CONTROL CENTER WILL INCLUDE DISASSEMBLE THE EXISTING STARTER AND CONTROLS AND REPLACE WITH A NEW SOLID-STATE STARTER WITH BUILT-IN SHORTING CONTRACTOR AND OVERLOAD RELAY, POWER DISTRIBUTION BLOCK, CONTROL POWER TRANFORMER AND SIMPLEX CONTROLLER. REPLACE WIRING FROM MOTOR CONTROL CENTER TO WELL, INSTALL NEW WELL DISCONNECT. THE NEW PUMP REQUIRES A 150H.P MOTOR, EVERYTHING SHOULD BE SIZED ACCORDINGLY, WORK SHALL INCLUDE THE INSATLLATION AND START-UP FOR A COMPLETE OPERATIONAL SYSTEM-INCLUDE FREIGHT	1.00	EA	25,800.0000	25,800.00

TOTAL CONTRACT AMOUNT NOT TO EXCEED 25,800.00

SUBMIT SEPARATE INVOICES FOR EACH ORDER. PREPAY SHIPPING CHARGES IF ANY AND ADD TO INVOICE.

THIS PO NUMBER MUST APPEAR ON ALL PACKAGES & INVOICES.

FOR CORRECTIONS TO VENDOR ADDRESS ABOVE, CONTACT ACCOUNTING (601) 545-4686.

EDDIE R. MYERS
CITY CLERK

05/16/2013 13:49 FAX 6015454689 HATTIESBURG WATER → PURCHASING 001
05/14/2013 TUE 14:07 FAX 6015453800 CHAIN ELECTRIC 002/002
MAY-14-2013(TUE) 06:38 P. 003/003
P. 002/002

43530

CITY OF HATTIESBURG
QUOTE REQUEST RESPONSE FORM

Page No. 1
Date - 5/14/13
Order Number . . 1944 CQ

CHAIN ELECTRIC COMPANY
PO BOX 2055
HATTIESBURG MS 39403-2058

Mail To. . . . . CITY OF HATTIESBURG
PURCHASING DIVISION
220 W FRONT ST.2ND FLOOR
PO BOX 1898
HATTIESBURG MS 39401

PRINTED NAME HARVEY SIMMONS

Phone Number . . 601 5454512

SIGNATURE [signature] DATE 5-14-13

Shipping terms are F.O.B. destination, freight prepaid

PROJECT LINE: WATER PLANT #2 MODIFICATIONS TO MOTOR CONTROL CENTER

ITEM DESCRIPTION	Request Date	QTY	UM	Unit Price	Extended Cost	Delivery Date	Expired Date
WATER PLANT #2 MODIFICATIONS TO MOTOR CONTROL CENTER WILL INCLUDE DISASSEMBLE THE EXISTING STARTER AND CONTROLS AND REPLACE WITH A NEW SOLID-STATE STARTER WITH BUILT-IN SHORTING CONTRACTOR AND OVERLOAD RELAY, POWER DISTRIBUTION BLOCK, CONTROL POWER TRANFORMER AND SIMPLEX CONTROLLER. REPLACE WIRING FROM MOTOR CONTROL CENTER TO WELL. INSTALL NEW WELL DISCONNECT. THE NEW PUMP REQUIRES A 150H.P. MOTOR, EVERYTHING SHOULD BE SIZED ACCORDINGLY. WORK SHALL INCLUDE THE INSTALLATION AND START-UP FOR A COMPLETE OPERATIONAL SYSTEM-INCLUDE FREIGHT	05/13/13	1.00	EA	$25,800.00	$25,800.00	6-24-13	8-30-13

[signature]

TOTAL BID PRICE $25,800.00

[signature]

RECEIVED
MAY 16 2013
Verlina Underwood
AWARDED

CITY OF HATTIESBURG
QUOTE REQUEST RESPONSE FORM

Page No. 1
Date - 5/14/13
Order Number . . 1944 OQ

CONTROL SYSTEMS INC
PO BOX 4852
JACKSON MS 39296-4852

Mail To. . . . . CITY OF HATTIESBURG
PURCHASING DIVISION
220 W FRONT ST.2ND FLOOR
PO BOX 1898
HATTIESBURG MS 39401

PRINTED NAME STEVEN C. HUPPERICH

Phone Number . . 601 5454512

SIGNATURE [signature] DATE 5.15.13

Shipping terms are F.O.B. destination, freight prepaid

PROJECT LINE: WATER PLANT #2 MODIFICATIONS TO MOTOR CONTROL CENTER

ITEM DESCRIPTION	Request Date	QTY	UM	Unit Price	Extended Cost	Delivery Date	Expired Date
WATET PLANT #2 MODIFICATIONS TO MOTOR CONTROL CENTER WILL INCLUDE DISASSEMBLE THE EXISTING STARTER AND CONTROLS AND REPLACE WITH A NEW SOLID-STATE STARTER WITH BUILT-IN SHORTING CONTRACTOR AND OVERLOAD RELAY, POWER DISTRIBUTION BLOCK, CONTROL POWER TRANFORMER AND SIMPLEX CONTROLLER. REPLACE WIRING FROM MOTOR CONTROL CENTER TO WELL. INSTALL NEW WELL DISCONNECT. THE NEW PUMP REQUIRES A 150H.P MOTOR, EVERYTHING SHOULD BE SIZED ACCORDINGLY, WORK SHALL INCLUDE THE INSATLLATION AND START-UP FOR A COMPLETE OPERATIONAL SYSTEM-INCLUDE FREIGHT	05/13/13	1.00	EA	$27,884.00	$27,884.00	7.10.13	6.28.13

TOTAL BID PRICE $27,884.00

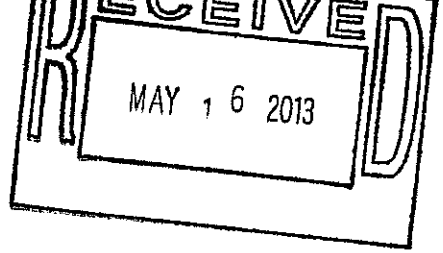

RECEIVED
MAY 16 2013

05/13/2013 14:46 6013598774 CONTROL SYSTEMS INC PAGE 02/02

City of Hattiesburg, MS

200 Forrest St.
P.O. Box 1898
Hattiesburg, MS 39401

Master

File Number: 2013-0313

File ID:	2013-0313	**Type:**	Regular Agenda Item	**Status:**	Agenda Ready
Version:	1	**Reference:**		**In Control:**	City Council
				File Created:	05/29/2013
Brief Title:	FY 2011-2012 Hattiesburg Arts Council Expenditure Report			**Final Action:**	
				Minute Book Number:	MB2013-162

Title:

Acknowledge receipt of FY2011-2012 Expenditure Report from Hattiesburg Arts Council for 2012 Summer Arts Program.

Notes:

Sponsors:		**Enactment Date:**	
Attachments:	2012 Hatt Arts Council Expend Report	**Enactment Number:**	
Contact:		**Meeting Date:**	06/04/2013
Drafter:	Ann Jones	**Effective Date:**	

History of Legislative File

Version:	Acting Body:	Date:	Action:	Sent To:	Due Date:	Return Date:	Result:
1	City Council	06/04/2013					

Text of Legislative File 2013-0313

Title

Acknowledge receipt of FY2011-2012 Expenditure Report from Hattiesburg Arts Council for 2012 Summer Arts Program.

Summary

Acknowledgement

Budget Information

Expenditure Type

Purchasing Item

Publication Information

Expenses for Summer Art, 2012

Art Teachers

Dr. Deitra Davis.....	$	1,200
Barbara Ann Hunt.....		1,000
Sarah Hoda.....		500
Josh Miller.....		500
Assistants: Riley Taylor.....		250
Abby Bradley.....		50
Dance: Miss Tracy.....		1,000
Music: Althea Jerome.....		1,000
Clown: For three performances one day, two the next		750
Supplies: Clay was a large expense of this purchase		1,422

We used it in all three sessions and the students loved it. However, I think that the older students benefit from it more. Therefore, we won't use it across the board again, or either some thought/careful planning will be done in order to address waste/wanting to start over.

$7,672

This does not include program for Seniors! Two of those at a cost of $1,893.

1,893

$9,565

City of Hattiesburg, MS

200 Forrest St.
P.O. Box 1898
Hattiesburg, MS 39401

Master

File Number: 2013-0311

File ID: 2013-0311 **Type:** Regular Agenda Item **Status:** Agenda Ready

Version: 1 **Reference:** **In Control:** City Council

File Created: 05/28/2013

Brief Title: Approve final acceptance of the project Country Club Area Water Rehabilitation; Authorize publication of the Notice of Final Settlement of Contract for same.

Final Action:

Minute Book Number: MB2013-162

Title:

Approve final acceptance of the project Country Club Area Water Rehabilitation; Authorize publication of the Notice of Final Settlement of Contract for same.

Notes:

Sponsors:

Enactment Date:

Attachments: NOTICE OF FINAL SETTLEMENT-Country Club Area Water Rehab, Closeout Documents

Enactment Number:

Contact:

Meeting Date: 06/04/2013

Drafter: Sharon Waits

Effective Date:

History of Legislative File

Version:	Acting Body:	Date:	Action:	Sent To:	Due Date:	Return Date:	Result:
1	City Council	06/04/2013					

Text of Legislative File 2013-0311

Title

Approve final acceptance of the project Country Club Area Water Rehabilitation; Authorize publication of the Notice of Final Settlement of Contract for same.

Summary

Approve final acceptance of the project Country Club Area Water Rehabilitation; Authorize publication of the Notice of Final Settlement of Contract for same.

Budget Information

Expenditure Type

Purchasing Item

Publication Information

Hattiesburg American
June 12, 2013

NOTICE OF FINAL SETTLEMENT

NOTICE is hereby given that the contract between the City of Hattiesburg, Mississippi, as Owner and Greenbriar Digging Service L. P. dated April 3, 2012
for the Country Club Area Water Rehabilitation project, as per approved plans and specification on file in the City Clerk's Office, has been fully and completely performed and exercised,
and that final settlement thereof and thereunder will be made.

THIS NOTICE is given pursuant to and under the terms and provisions of Section 31-5-53, Mississippi Code of 1972, annotated
as amended and pursuant to the authority conferred by Order of the Mayor and City Council of Hattiesburg, Mississippi, appearing for record upon and as part of the official minutes of
said City of Hattiesburg.

WITNESS my signature and the official seal of said City, on this the 4th day of June, 2013, A.D.

CITY OF HATTIESBURG, MISSISSIPPI
BY: Eddie
R. Myers /s
CITY CLERK

(S E A L) Publish (1) Wednesday, June 12, 2013
Return PROOF to City Clerk's Office
P O Box 1898
Hattiesburg, MS 39403

sdw

Engineering Progress

4/30/13

April 29, 2013

City of Hattiesburg
PO Box 1898
Hattiesburg MS 39403-1898

Attn: Bert Kuyrkendall, P.E.

RE: **Water System Rehabilitation in the Country Club Area**
Hattiesburg, MS

Dear Mr. Kuyrkendall:

This is to certify the above referenced project has been completed in accordance with the previously approved plans and specifications.

Enclosed are the following documents:

1. The final estimate no. 6 for the contractor in the amount of $14,746.60
2. Contractor's Affidavit of Guarantee of Materials
3. Contractor's Affidavit of Payment of Debts
4. Consent of Surety to final Payment
5. Supplemental Agreement No. 1

Please do not hesitate to contact me should you have questions or comments.

Sincerely,

Kyle D. Wallace, P.E.
Project Engineer

/rs

Enclosures

301 Second Ave. | Hattiesburg, MS 39401 | (p) 601.544.1821 | (f) 601.544.0501 | sd-w.com

Final

OR 144810

CONTRACTOR:	GREENBRIAR DSLP 1941 HWY 550 NW BROOKHAVEN, MS 39601	ORIGINAL CONTRACT: CHANGE ORDERS: REVISED CONTRACT:	$254,700.00 0.00 $254,700.00
OWNER:	CITY OF HATTIESBURG P. O. BOX 1898 HATTIESBURG, MS 39403-1898	ORIGINAL COMPLETION:	January 5, 2013

PROJECT: WATER SYSTEM REHABILITATION IN THE COUNTRY CLUB AREA -- CONTRACT B

ESTIMATE #: SIX - FINAL

DATE: DECEMBER 1, 2012 to DECEMBER 20, 2012

	THIS PERIOD AMOUNT	TOTAL TO DATE AMOUNT	
BASE BID TOTALS:	3,250.00	~~243,182.00~~	242,682.00
STORED MATERIAL:	0.00	0.00	
TOTALS EARNED:	3,250.00	~~243,182.00~~	242,682.00
AMOUNT RETAINED __%:	-11,996.60	0.00	
PREVIOUS PAYMENT REQUESTS:	0.00	227,935.40	
AMOUNT DUE:	15,246.60	~~15,246.60~~	14,746.60

CONTRACTOR Certification:

The undersigned CONTRACTOR certifies that (1) all previous progress payments received from OWNER on account of Work done under the Contract referred to above have been applied to discharge in full all obligations of CONTRACTOR incurred in connection with Work covered by prior Applications for Payment number 1 through 5 Inclusive; and (2) title to all materials and equipment incorporated in said Work or otherwise listed in or covered by this Application for Payment will pass to OWNER at time of payment free and clear of all liens, claims, security interests and encumbrances (except such as covered by Bond acceptable to OWNER).

Dated December 20, 2012

GREENBRIAR DSLP
CONTRACTOR

By: _____
Jessie Neal, Managing Partner

ENGINEER Recommendation:

This Application (with accompanying documentation) meets the requirements of the Contract Documents and payment of the above AMOUNT DUE THIS APPLICATION is recommended.

Dated April 29, 2013

SHOWS, DEARMAN & WAITS, INC.
ENGINEER

By: _____

OWNER APPROVAL:

BY: _____
CITY OF HATTIESBURG, MS

DATE: 5/13/13

ENTERED

094695. 7245.18
MB 2012-1/ 106

ESTIMATE NUMBER: SIX - FINAL
NAME OF CONTRACTOR: GREENBRIAR DSLP, 1941 HWY 550 NW, BROOKHAVEN, MS 39601
NAME OF OWNER: CITY OF HATTIESBURG, P. O. BOX 1898, HATTIESBURG, MS 39403-1898
CONTRACT AMOUNT: ORIGINAL $ 254,700.00
COMPLETION DATE: ORIGINAL January 5, 2013
DATES OF ESTIMATE: DECEMBER 1, 2012 to DECEMBER 20, 2012
PROJECT DESCRIPTION: WATER SYSTEM REHABILITATION IN THE COUNTRY CLUB AREA -- CONTRACT B

ITEM	DESCRIPTION	UNIT	QUANTITY	UNIT PRICE	TOTAL PRICE	THIS PERIOD QUANTITY	THIS PERIOD AMOUNT	TOTAL TO DATE QUANTITY	TOTAL TO DATE AMOUNT
1.	Clearing & Grubbing	LS	1	5,000.00	5,000.00		-	1	5,000.00
2.	Remove and Replace Pipe Culvert, All Sizes	LF	188	20.00	3,760.00		-		-
3.	Remove and Salvage of Existing Fire Hydrants	EA	1	250.00	250.00		-	3	750.00
4.	Cut and Cap Existing Water Line to Stay in Service	EA	2	500.00	1,000.00		-	1	500.00
5.	Granular Material (Class 9, Group C) (Roadway Only)	CY	228	10.00	2,280.00		-	308	3,080.00
6.	Asphalt Pavement Repair (All Thicknesses) (Roadway Only)	SY	560	33.00	18,480.00		-	667	22,011.00
7.	6" PVC Water Line, C900, Class 200 (Open Cut)	LF	2,380	13.00	30,940.00		-	2,320	30,160.00
8.	8" PVC Water Line, C900, Class 200 (Open Cut)	LF	4,760	17.00	80,920.00		-	4,778	81,226.00
9.	12" Steel Casing (0.25 WT) (Bored) (All Depths)	LF	180	70.00	12,600.00		-	180	12,600.00
10.	16" Steel Casing (0.25 WT) (Bored) (All Depths)	LF	120	85.00	10,200.00		-	80	6,800.00
11.	16" Steel Casing (0.25 WT) (Open Cut) (All Depths)	LF	30	40.00	1,200.00		-	80	3,200.00
12.	6" Hot Tap w/Valve to Existing 12" Water Line	EA	2	2,000.00	4,000.00		-	2	4,000.00
13.	8" Hot Tap w/Valve to Existing 12" Water Line	EA	1	2,500.00	2,500.00		-	1	2,500.00
14.	Tie Proposed 6" Water Line to Exist 6" Water Line	EA	1	500.00	500.00		-	1 2	500.00 ~~6,000.00~~
15.	Tie Proposed 6" Water Line to Exist 6" Water Line (w/Tee)	EA	1	800.00	800.00		-	1	800.00
16.	Tie Proposed 6" Water Line to Exist 8" Water Line (w/Tee)	EA	1	900.00	900.00		-	1	900.00
17.	Tie Proposed 8" Water Line to Exist 8" Water Line (w/Tee)	EA	1	950.00	950.00		-		-
18.	6" Gate Valve	EA	3	750.00	2,250.00		-	3	2,250.00
19.	8" Gate Valve	EA	6	1,050.00	6,300.00		-	6	6,300.00
20.	Three Way Fire Hydrant w/Appurtenances (Incl. Tee, 90 Bend, Pipe, Valve, Hydrant, Etc.)	EA	8	3,000.00	24,000.00		-	8	24,000.00
21.	Blow Off w/Valve	EA	1	400.00	400.00		-	1	400.00
22.	Reconnect Existing Service (Incl. Saddle, Service Tubing, Corp. Stop, Fittings, Etc.) (Meter, Meter Box, and Yokes provided by owner)	EA	117	160.00	18,720.00		-	71	11,360.00
23.	Service Line Bore	LF	1,550	5.00	7,750.00		-	1,069	5,345.00
24.	Mobilization	LS	1	5,000.00	5,000.00		-	1	5,000.00
25.	Maintenance of Traffic	LS	1	2,500.00	2,500.00		-	1	2,500.00
26.	Grassing	LS	1	6,500.00	6,500.00	0.50	3,250.00	1	6,500.00
27.	Erosion Control (As Directed)	LS	1	5,000.00	5,000.00		-	1	5,000.00
	TOTALS				$ 254,700.00		$ 3,250.00		$ ~~243,182.00~~

242,682.00

GREENBRIAR

1941 Highway 550 NW
Brookhaven, MS 39601-9615
Telephone: 601-833-0975
Fax: 601-833-0986

RE: CITY OF HATTIESBURG, MS
WATER SYSTEM REHABILITATION IN THE
COUNTRY CLUB AREA - CONTRACT B

AFFIDAVIT

We hereby guarantee all materials used by us on the above captioned project to be free from defect for a period of one year or such longer period of time as may be called for in the contract documents for such portions of the work.

GREENBRIAR DIGGING SERVICE L P

BY _____
Jessie Neal

TITLE Managing Partner

DATE December 20, 2012

Subscribed and sworn to before me this

the 20th day of December, 2012

_____
Notary Public

Joan Culpepper

STATE OF MISSISSIPPI
NOTARY PUBLIC
ID # 89665
JOAN CULPEPPER
Commission Expires
May 27, 2016
LINCOLN COUNTY

GREENBRIAR

1941 Highway 550 NW
Brookhaven, MS 39601-9615
Telephone: 601-833-0975
Fax: 601-833-0986

RE: CITY OF HATTIESBURG, MS
WATER SYSTEM REHABILITATION IN THE
COUNTRY CLUB AREA - CONTRACT B

AFFIDAVIT

I certify that all bills for labor, services, materials and subcontractors have been paid and there are no suits pending in connection with the work done or labor and materials furnished under the above contract; and that we have received full payment for all contract work performed.

GREENBRIAR DIGGING SERVICE L P

BY _____
Jessie Neal

TITLE Managing Partner

DATE December 20, 2012

Subscribed and sworn to before me this

the 20th day of December, 2012

_____
Notary Public

Joan Culpepper

STATE OF MISSISSIPPI
NOTARY PUBLIC
ID # 89665
JOAN CULPEPPER
Commission Expires
May 27, 2016
LINCOLN COUNTY

CONSENT OF SURETY TO FINAL PAYMENT

AIA Document G707

Bond No. 43BCSGG0029

OWNER	☐
ARCHITECT	☐
CONTRACTOR	☐
SURETY	☒
OTHER	☐

TO OWNER:
(Name and address)

City of Hattiesburg
P.O. Box 1898
Hattiesburg, MS 39403-1898

ARCHITECT'S PROJECT NO.:

CONTRACT FOR: Water System Rehabilitation in the Hattiesburg Country Club Area- Contract B, City of Hattiesburg, Mississippi

CONTRACT DATED:

PROJECT:
(Name and address)

Water System Rehabilitation in the Hattiesburg Country Club Area- Contract B, City of Hattiesburg, Mississippi

In accordance with the provisions of the Contract between the Owner and the Contractor as indicated above, the
(Insert name and address of Surety)

Hartford Fire Insurance Company
One Hartford Plaza
Hartford, CT 16155-0001

, SURETY,

on bond of
(Insert name and address of Contractor)

Greenbriar Digging Service Limited Partnership
1941 Hwy 550 NW
Brookhaven, MS 39601

, CONTRACTOR,

hereby approves of the final payment to the Contractor, and agrees that final payment to the Contractor shall not relieve the Surety of any of its obligations to
(Insert name and address of Owner)

City of Hattiesburg
P.O. Box 1898
Hattiesburg, MS 39403-1898

, OWNER,

as set forth in said Surety's bond.

IN WITNESS WHEREOF, the Surety has hereunto set its hand on this date: April 17, 2013
(Insert in writing the month followed by the numeric date and year.)

Hartford Fire Insurance Company
(Surety)

Trina Cobb
(Signature of authorized representative)

Attest:
(Seal): Peggy Jackson

Trina Cobb Attorney-in-Fact
(Printed name and title)
Resident Mississippi Agent
Bottrell Insurance

POWER OF ATTORNEY

Direct Inquiries/Claims to:
THE HARTFORD
Bond T-4
One Hartford Plaza
Hartford, Connecticut 06155
call: **888-266-3488** *or fax:* **860-757-5835)**

KNOW ALL PERSONS BY THESE PRESENTS THAT: **Agency Code: SurePath**

- [X] **Hartford Fire Insurance Company**, a corporation duly organized under the laws of the State of Connecticut
- [ ] **Hartford Casualty Insurance Company**, a corporation duly organized under the laws of the State of Indiana
- [ ] **Hartford Accident and Indemnity Company**, a corporation duly organized under the laws of the State of Connecticut
- [ ] **Hartford Underwriters Insurance Company**, a corporation duly organized under the laws of the State of Connecticut
- [ ] **Twin City Fire Insurance Company**, a corporation duly organized under the laws of the State of Indiana
- [ ] **Hartford Insurance Company of Illinois**, a corporation duly organized under the laws of the State of Illinois
- [ ] **Hartford Insurance Company of the Midwest**, a corporation duly organized under the laws of the State of Indiana
- [ ] **Hartford Insurance Company of the Southeast,** a corporation duly organized under the laws of the State of Florida

having their home office in Hartford, Connecticut (hereinafter collectively referred to as the "Companies") do hereby make, constitute and appoint

Trina Cobb *of* **Jackson, MS**

their true and lawful Attorney-in-Fact, to sign its name as surety(ies) only as delineated above by ☒, and to execute, seal and acknowledge the following bond, undertaking, contract or written instrument:
Bond No. 43BCSGG0029 on behalf of Greenbriar Digging Service Limited Partnership naming City of Hattiesburg as Obligee in the amount of See Bond Form
on behalf of the Companies in their business of guaranteeing the fidelity of persons, guaranteeing the performance of contracts and executing or guaranteeing bonds and undertakings required or permitted in any actions or proceedings allowed by law.

In Witness Whereof, and as authorized by a Resolution of the Board of Directors of the Companies on August 1, 2009, the Companies have caused these presents to be signed by its Vice President and its corporate seals to be hereto affixed, duly attested by its Assistant Secretary. Further, pursuant to Resolution of the Board of Directors of the Companies, the Companies hereby unambiguously affirm that they are and will be bound by any mechanically applied signatures applied to this Power of Attorney.

Wesley W. Cowling, Assistant Secretary

M. Ross Fisher, Vice President

STATE OF CONNECTICUT }
COUNTY OF HARTFORD } ss. Hartford

On this 12th day of July, 2012, before me personally came M. Ross Fisher, to me known, who being by me duly sworn, did depose and say: that he resides in the County of Hartford, State of Connecticut; that he is the Vice President of the Companies, the corporations described in and which executed the above instrument; that he knows the seals of the said corporations; that the seals affixed to the said instrument are such corporate seals; that they were so affixed by authority of the Boards of Directors of said corporations and that he signed his name thereto by like authority.

Kathleen T. Maynard
Notary Public
My Commission Expires July 31, 2016

CERTIFICATE

I, the undersigned, Vice President of the Companies, DO HEREBY CERTIFY that the above and foregoing is a true and correct copy of the Power of Attorney executed by said Companies, which is still in full force effective as of April 17, 2013
Signed and sealed at the City of Hartford.

Gary W. Stumper, Vice President

THE CITY OF HATTIESBURG
Water System Rehabilitation in the Hattiesburg Country Club Area

SUPPLEMENTAL AGREEMENT NO. 1

FORREST COUNTY, MISSISSIPPI

WHEREAS: We, Greenbriar Digging Service Limited Partnership, Contractor and Hartford Fire Insurance Company, Surety entered into a contract with the City of Hattiesburg on the 3rd Day of April, 2012 for the Water System Rehabilitation in the Hattiesburg Country Club Area.

WHEREAS: The quantities shown in the awarded bid schedule shall be modified as reflected in the attached over-run/under-run statement.

Original Contract Price =	$254,700.00
Project Under-Run =	($12,018.00)
Revised Contract Amount =	$242,682.00

This agreement in no way modifies or changes the original contract of which it becomes a part, except as specifically stated herein.

NOW, THEREFORE, We, Greenbriar Digging Service Limited Partnership, Contractor and Hartford Fire Insurance Company, hereby agree that said Supplemental Agreement is hereby made a part of the Original Contract to be performed under the specifications thereof, and that the Original Contract is in full force and effect, except insofar as it might be modified by this Supplement Agreement.

Dated, this _____ day of APR 23 2013, 2013

Greenbriar Digging Service Limited Partnership

By: _____
Contractor Jessie Neal

Witness: _____
Toni Culpepper

The City of Hattiesburg, MS

By: _____
Johnny L. DuPree, Ph.D, Mayor

Witness: _____

Hartford Fire Insurance Company

By: _____
ANNA COBB
Attorney-In-Fact And
Resident Mississippi Agent

Witness: _____
Neil Case

OVERRUNS & UNDERRUNS

PROJECT: Water System Rehab in the Country Club Area Contract B

CONTRACTOR: Greenbriar DSLP
1941 Hwy 550 NW, Brookhaven, MS 39601

ITEM NO.	ITEM DESCRIPTION	UNIT	ORIGINAL QUANTITY	FINAL QUANTITY	OVERRUNS	UNDERRUNS	UNIT PRICE	INCREASE	DECREASE
1	Clearing & Grubbing	LS	1	1			$ 5,000.00	$ -	$ -
2	Remove and Replace Pipe Culvert, All Sizes	LF	188	0		188	$ 20.00	$ -	$ 3,760.00
3	Remove and Salvage of Existing Fire Hydrants	EA	1	3	2		$ 250.00	$ 500.00	$ -
4	Cut and Cap Existing Water Line to Stay in Service	EA	2	1		1	$ 500.00	$ -	$ 500.00
5	Granular material (Class 9, Group C) (Roadway Only)	CY	228	308	80		$ 10.00	$ 800.00	$ -
6	Asphalt Pavement Repair (All Thicknesses) (Roadway Only)	SY	560	667	107		$ 33.00	$ 3,531.00	$ -
7	6" PVC Water Line, C900, Class 200 (Open Cut)	LF	2380	2320		60	$ 13.00	$ -	$ 780.00
8	8" PVC Water Line, C900, Class 200 (Open Cut)	LF	4760	4778	18		$ 17.00	$ 306.00	$ -
9	12" Steel Casing (0.25 WT) (Bored) (All Depths)	LF	180	180			$ 70.00	$ -	$ -
10	16" Steel Casing (0.25 WT) (Bored) (All Depths)	LF	120	80		40	$ 85.00	$ -	$ 3,400.00
11	16" Steel Casing (0.25 WT) (Open Cut) (All Depths)	LF	30	80	50		$ 40.00	$ 2,000.00	$ -
12	6" Hot Tap w/Valve to Existing 12" Water Line	EA	2	2			$ 2,000.00	$ -	$ -
13	8" Hot Tap w/Valve to Existing 12" Water Line	EA	1	1			$ 2,500.00	$ -	$ -
14	Tie Proposed 6" Water Line to Exist 6" Water Line	EA	1	1			$ 500.00	$ -	$ -
15	Tie Proposed 6" Water Line to Esist 6" Water Line (w/Tee)	EA	1	1			$ 800.00	$ -	$ -
16	Tie Proposed 6" Water Line to Exist 8" Water Line (w/Tee)	EA	1	1			$ 900.00	$ -	$ -
17	Tie Proposed 8" Water Line to Exist 8" Water Line (w/Tee)	EA	1	0		1	$ 950.00	$ -	$ 950.00
18	6" Gate Valve	EA	3	3			$ 750.00	$ -	$ -
19	8" Gate Valve	EA	6	6			$ 1,050.00		
20	Three Way Fire Hydrant w/Appurtenances (Incl. Tee, 90 Bend, Pipe, Valve, Hydrant, Etc.)	EA	8	8			$ 3,000.00	$ -	$ -
21	Blow Off w/Valve	EA	1	1			$ 400.00	$ -	$ -
22	Reconnect Existing Service (Incl. Saddle, Service Tubing, Corp Stop, Fittings, Etc.) (Meter, Meter Box, and Yokes provided by owner)	EA	117	71		46	$ 160.00	$ -	$ 7,360.00
23	Service Line Bore	LF	1550	1069		481	$ 5.00	$ -	$ 2,405.00
24	Mobilization	LS	1	1			$ 5,000.00	$ -	$ -
25	Maintenance of Traffic	LS	1	1			$ 2,500.00	$ -	$ -
26	Grassing	LS	1	1			$ 6,500.00	$ -	$ -
27	Erosion Control (As Directed)	LS	1	1			$ 5,000.00	$ -	$ -
								$ 7,137.00	$ 19,155.00

PROJECT DECREASE	$ 12,018.00
Original Contract Amount	$ 254,700.00
Underrun	$ 12,018.00
Final Contract Amount	$ 242,682.00

City of Hattiesburg, MS

200 Forrest St.
P.O. Box 1898
Hattiesburg, MS 39401

Master

File Number: 2013-0310

File ID: 2013-0310 **Type:** Regular Agenda Item **Status:** Agenda Ready

Version: 1 **Reference:** **In Control:** City Council

File Created: 05/28/2013

Brief Title: Approve final acceptance of the project Construction of New Cells at the North Lagoon; Authorize Publication of the Notice of Final Settlement of Contract for same.

Final Action:

Minute Book Number: MB2013-162

Title:

Approve final acceptance of the project Construction of New Cells at the North Lagoon; Authorize Publication of the Notice of Final Settlement of Contract for same.

Notes:

Sponsors: **Enactment Date:**

Attachments: Closeout Documents, NOTICE OF FINAL SETTLEMENT-North Lagoon Expansion

Enactment Number:

Contact:

Meeting Date: 06/04/2013

Drafter: Sharon Waits

Effective Date:

History of Legislative File

Version:	Acting Body:	Date:	Action:	Sent To:	Due Date:	Return Date:	Result:
1	City Council	06/04/2013					

Text of Legislative File 2013-0310

Title

Approve final acceptance of the project Construction of New Cells at the North Lagoon; Authorize Publication of the Notice of Final Settlement of Contract for same.

Summary

Approve final acceptance of the project Construction of New Cells at the North Lagoon; Authorize Publication of the Notice of Final Settlement of Contract for same.

Budget Information

Expenditure Type

Purchasing Item

Publication Information

Hattiesburg American
June 12, 2013

sdw

Engineering Progress

RECEIVED 4/30/13

April 22, 2013

City of Hattiesburg
P.O. Box 1898
Hattiesburg, MS 39403

Attn: Bert Kuyrkendall

Re: Construction of New Cells at North Lagoon
City of Hattiesburg

Bert:

Enclosed please find the required closeout documents on the above captioned project:

1. Contractor's Affidavit of Release of Liens
2. Contractor's Affidavit of Payment of Debts and Claims
3. Contractor's Warranty Letter
4. Control System Warranty Letter

Should you have any questions or comments, please do not hesitate to call.

Sincerely,

Kyle D. Wallace, P.E.
Project Engineer

/kw

Enclosures

301 Second Ave. | Hattiesburg, MS 39401 | (p) 601.544.1821 | (f) 601.544.0501 | sd-w.com

CONTRACTOR'S AFFIDAVIT OF RELEASE OF LIENS

AIA DOCUMENT G706A

OWNER ☐
ARCHITECT ☐
CONTRACTOR ☐
SURETY ☐
OTHER ☐

TO (Owner)
City of Hattiesburg

ARCHITECT'S PROJECT NO:

CONTRACT FOR: All Work

CONTRACT DATE: September 30, 2011

PROJECT: (name, address)
Construction of New Cells at the North Lagoon, City of Hattiesburg

Acceptance of Notice

State of: Mississippi
County of: Forrest

The undersigned, pursuant to Article 9 of the General Conditions of the Contract for Construction, AIA Document A201, hereby certifies that to the best of his knowledge, information and belief, except as listed below, the Releases or Waivers of Lien attached hereto include the Contractor, all Subcontractors, all suppliers of materials and equipment, and all performers of Work, labor or services who have or may have liens against any property of the Owner arising in any manner out of the performance of the Contract referenced above.

EXCEPTIONS: (If none, write "None". If required by the Owner, the Contractor shall furnish bond satisfactory to the Owner for each exception.)

None

SUPPORTING DOCUMENTS ATTACHED HERETO:

1. Contractor's Release or Waiver of Liens, conditional upon receipt of final payment.
2. Separate Releases or Waivers of Liens from Subcontractors and material and equipment suppliers, to the extent required by the Owner, accompanied by a list thereof.

CONTRACTOR: PierCon, Inc.

Address: 23 Liberty Pl
Hattiesburg,

BY:

STATE OF MISSISSIPPI
Angela Ann Sprayberry
ID No 102750
Comm Expires
July 09 2016
NOTARY PUBLIC
LAMAR COUNTY

Subscribed and sworn to before me this 30 day of October 2012

Notary Public: Angela Ann Sprayberry

My Commission Expires: July 9, 2016

CONTRACTOR'S AFFIDAVIT OF PAYMENT OF DEBTS AND CLAIMS

AIA Document G706

OWNER ☐
ARCHITECT ☐
CONTRACTOR ☐
SURETY ☐
OTHER ☐

TO (Owner)
City of Hattiesburg

ARCHITECT'S PROJECT NO:

CONTRACT FOR: All Work

CONTRACT DATE: September 30 2011 Acceptance of Notice

PROJECT: (name, address) Construction of New Cells at the North Lagoon, City of Hattiesburg

State of: Mississippi
County of: Forrest

The undersigned, pursuant to Article 9 of the General Conditions of the Contract for Construction, AIA Document A201, hereby certifies that, except as listed below, he has paid in full or has otherwise satisfied all obligations for all materials and equipment furnished, for all work, labor, and services performed, and for all known indebtedness and claims against the Contractor for damages arising in any manner in connection with the performance of the Contract referenced above for which the Owner or his property might in any way be held responsible.

EXCEPTIONS: (If none, write "None". If required by the Owner, the Contractor shall furnish bond satisfactory to the Owner for each exception.)

None

SUPPORTING DOCUMENTS ATTACHED HERETO:

1. Consent of Surety to Final Payment. Whenever Surety is involved, Consent of Surety is required. AIA DOCUMENT G707, CONSENT OF SURETY, may be used for this purpose.
   Indicate attachment: (yes) (no).

The following supporting documents should be attached hereto if required by the Owner:

1. Contractor's Release or Waiver of Liens, conditional upon receipt of final payment.
2. Separate Releases or Waivers of Liens from Subcontractors and material and equipment suppliers, to the extent required by the Owner, accompanied by a list thereof.
3. Contractor's Affidavit of Release of Liens (AIA DOCUMENT G706A).

CONTRACTOR: PierCon, Inc.

Address: 23 Liberty Place
Hattiesburg, MS 39401

BY:

STATE OF MISSISSIPPI
Angela Ann Sprayberry
ID No 102750
Comm Expires
July 09,2016
NOTARY PUBLIC
LAMAR COUNTY

Subscribed and sworn to before me this 30th day of October 2011

Notary Public: Angela Ann Sprayberry

My Commission Expires: July 9, 2016

PierCon, Inc.
General Contractor
www.PierCon.us

GUARANTEE OF WORK

Project: Construction of New Cells at the North Lagoon

Owner: City of Hattiesburg
Forrest County, Mississippi

"We hereby guarantee all work performed by us on the above captioned Project to be free from defective materials and workmanship for a period of one (1) year or such longer period of time as may be called for in the Contract Documents for such portions of the Work.

Within the Guaranty period, if repairs or changes are requested in connection with guaranteed work which, in the opinion of the Owner, are rendered necessary as a result of the use of materials, equipment or workmanship which are inferior, defective or not in accordance with the terms of the Contract, the Contractor shall promptly, upon receipt of notice from and without expense to the Owner, place in satisfactory condition building, site, equipment or contents thereof. The Contractor shall make good any work, materials, equipment, or contents of said buildings or site disturbed in fulfilling any such guaranty.

If after notice, the Contractor fails to proceed promptly to comply with the terms of the Guaranty, the Owner may have the defects corrected and the Contractor and his Sureties shall be liable for all expense incurred.

All special guarantees applicable to definite parts of the work stipulated in the Project Manual or other documents forming part of the Contract shall be subject to the terms of this paragraph during the first year of the life of such special guaranty."

Name: _____ Date: 30 Oct 2012

Title: VICE PRESIDENT

Notary: Angela Ann Sprayberry Date: 10-30-12

NOTARY SEAL



WARRANTY STATEMENT

Warranties to distributors and other commercial customers. Control Systems, Inc. warrants equipment manufactured by it to be free from defects in materials and workmanship for a period of two (2) years from date of acceptance. If within such period any such equipment shall be proved to Control Systems, Inc. satisfaction to be defective, such equipment shall be repaired or replaced at the option of Control Systems, Inc. Repair parts may be new parts, used parts, rebuilt parts, or exchange parts, at the option of Control Systems, Inc. This warranty shall not apply (a) to equipment not manufactured by Control Systems, Inc., (b) to equipment which shall have been repaired or altered by others than Control Systems, Inc. so as, in its judgement, to affect the equipment adversely, or (c) to equipment which shall have been subjected to negligence, accident or damage by circumstances beyond the control of Control Systems, Inc. or to improper operation, maintenance or storage, or to other than normal use or service. With respect to equipment not manufactured by Control Systems, Inc., the warranty obligations of Control Systems, Inc. shall in all respects conform to and be limited to the warranty actually extended to Control Systems, Inc. by its supplier. The foregoing warranties do not cover reimbursement for transportation, removal, installation, or other expenses which may be incurred in connection with repair or replacement.

This warranty is expressly in lieu of any other warranties, expressed or implied, including, but not limited to, any warranty of merchantability or fitness for a particular purpose. Remedies under this or any warranty are expressly limited to repair or replacement as specified above, and such repair or replacement constitutes the sole and exclusive remedy. Under no circumstances shall Control Systems, Inc. be liable for any claims for loss or damage of any kind, for injuries to any person or property caused either directly or indirectly by the equipment. Any and all claims for direct special, indirect or consequential damage for any person or property or for any other economic loss are expressly excluded, whether arising out of failure of the equipment to operate for any period of time or out of any defects of the equipment or for any other reason. Except as may be expressly provided in an authorized writing by Control Systems, Inc., Control Systems, Inc. shall not be subject to any other obligations or liabilities whatsoever with respect to equipment manufactured by Control Systems, Inc. or services rendered by Control Systems, Inc.

NOTICE OF FINAL SETTLEMENT

NOTICE is hereby given that the contract between the City of Hattiesburg, Mississippi, as Owner and PierCon, Inc. dated October 7, 2011 for the Construction of New Cells at the North Lagoon, as per approved plans and specification on file in the City Clerk's Office, has been fully and completely performed and exercised, and that final settlement thereof and thereunder will be made.

THIS NOTICE is given pursuant to and under the terms and provisions of Section 31-5-53, Mississippi Code of 1972, annotated as amended and pursuant to the authority conferred by Order of the Mayor and City Council of Hattiesburg, Mississippi, appearing for record upon and as part of the official minutes of said City of Hattiesburg.

WITNESS my signature and the official seal of said City, on this the 4th day of June, 2013, A.D.

CITY OF HATTIESBURG, MISSISSIPPI
BY: Eddie R. Myers /s
CITY CLERK

(S
E A L) Publish (1) Wednesday, June 12, 2013
Return PROOF to City Clerk's Office
P O Box 1898
Hattiesburg, MS 39403

City of Hattiesburg, MS

200 Forrest St.
P.O. Box 1898
Hattiesburg, MS 39401

Master

File Number: 2013-0304

File ID:	2013-0304	**Type:**	Regular Agenda Item	**Status:**	Agenda Ready
Version:	1	**Reference:**		**In Control:**	City Council
				File Created:	05/28/2013
Brief Title:	Accept street deed from Welkin Enterprises, LLC.			**Final Action:**	
				Minute Book Number:	MB2013-162

Title:

Acknowledge receipt of a street deed for a part of Blocks 1 & 2 of High-Land Park Subdivision as more particularly described in the attached deed granted by Welkin Enterprises, LLC; Accept said street for maintenance.

Notes:

Sponsors:		**Enactment Date:**	
Attachments:	Street Deed - Cedar Street - Signed	**Enactment Number:**	
Contact:		**Meeting Date:**	06/04/2013
Drafter:	Sharon Waits	**Effective Date:**	

History of Legislative File

Version:	Acting Body:	Date:	Action:	Sent To:	Due Date:	Return Date:	Result:
1	City Council	06/04/2013					

Text of Legislative File 2013-0304

Title

Acknowledge receipt of a street deed for a part of Blocks 1 & 2 of High-Land Park Subdivision as more particularly described in the attached deed granted by Welkin Enterprises, LLC; Accept said street for maintenance.

Summary

Acknowledge receipt of a street deed for a part of Blocks 1 & 2 of High-Land Park Subdivision as more particularly described in the attached deed granted by Welkin Enterprises, LLC; Accept said street for maintenance.

Budget Information

Expenditure Type

Purchasing Item

Publication Information

Grantee, prepared by and return to:	**Grantor Address:**
City of Hattiesburg	Welkin Enterprises, LLC
Department of Engineering	108 North Main Street
PO Box 1898	Petal, MS 39465
Hattiesburg, MS 39403-1898	
Phone: (601) 545-4540	**Phone:**
Account No.	**Business No.**

STREET DEED

INDEXING INSTRUCTIONS: A part of Blocks 1 & 2 of High-Land Park Subdivision as per map or plat thereof on file in the Office of the Chancery Clerk of Forrest County in record or plat Book 1, Page 16 and a part of the Northwest ¼ of the Northeast ¼ of Section 22, Township 4 North, Range 13 West, in the City of Hattiesburg, County of Forrest, State of Mississippi.

Forrest County
Tax Parcel No.: 02-038I-22-056.00
& 02-038I-22-063.00

THE STATE OF MISSISSIPPI

County of Forrest

City of Hattiesburg

For and in consideration of the sum of Ten Dollars ($10.00), cash in hand paid, and other good and valuable considerations, including the benefits to be derived herefrom, the receipt and sufficiency of which is hereby acknowledged, I/we, the undersigned, hereby grant, bargain, sell, and convey unto the City of Hattiesburg, Mississippi, a municipal corporation, a **Street Deed** over, across and upon a parcel of real property, located in the City of Hattiesburg, County of Forrest, State of Mississippi:

A part of Blocks 1 & 2 of High-Land Park Subdivision as per map or plat thereof on file in the Office of the Chancery Clerk of Forrest County in record or plat Book 1, Page 16 and a part of the Northwest ¼ of the Northeast ¼ of Section 22, Township 4 North, Range 13 West, in the City of Hattiesburg, County of Forrest, State of Mississippi, and being more particularly described as follows:

- **Commencing** at a ½ Inch Rebar representing the Northwest Corner of Lot 1 of said Block 2 and the Northwest Corner of a Parcel of Land currently owned by Frances French (County Tax ID No. 2-038I-22-054.00) as per Deed Book 1075, Page 506 thereof on file in the Office of the Chancery Clerk of Forrest County, said Point also being a Point on the Southern Right of Way Line of County Drive, a public roadway, and the **Point of Beginning**;
- thence run S00°00'55"W along the West Line of said Parcel for 101.29 feet to the Southwest Corner of said Parcel and the Northwest Corner of a Parcel of Land currently owned by Matthew K & Melisa A Courtney (County Tax ID No. 2-038I-22-055.00) as per Deed Book 1007, Page 079 thereof on file in the Office of the Chancery Clerk of Forrest County,
- thence continue S00°00'55"W along the West Line of said Parcel for 101.29 feet to the Southwest Corner of said Parcel and the Northwest Corner of a Parcel of Land currently owned by Welkin Enterprises, LLC (County Tax ID No. 2-038I-22-056.00 & 2-038I-22-063.00) as per Deed Book 1044, Page 431 thereof on file in the Office of the Chancery Clerk of Forrest County,
- thence run N89°50'31"E along a North Line of said Parcel for 3.09 feet,

- thence run S00°08'09"E for 121.09 feet,
- thence continue S00°08'09"E for 101.23 feet,
- thence run S00°03'32"W for 107.09 feet,
- thence run S00°05'17"W for 134.66 feet,
- thence run S00°12'07"W for 317.45 feet,
- thence run N89°47'53"W for 40.00 feet to a ½ Inch Rebar representing a Corner on the West Line of said Parcel and the Southeast Corner of a Parcel of Land currently owned by KNC, LLC (County Tax ID No. 2-038I-22-062.02) as per Deed Book 1093, Page 061 (Parcel 5) thereof on file in the Office of the Chancery Clerk of Forrest County,
- thence run N00°12'07"E along the East Line of said Parcel for 317.41 feet to a ½ Inch Rebar representing the Northeast Corner of said Parcel and the Southeast Corner of a Parcel of Land currently owned by William Carey University (County Tax ID No. 2-038I-22-062.00) as per Deed Book 1118, Page 072 (Parcel 1) thereof on file in the Office of the Chancery Clerk of Forrest County,
- thence run N00°05'17"E along the East Line of said Parcel for 134.62 feet to a ½ Inch Rebar representing the Northeast Corner of said Parcel and the Southeast Corner of a Parcel of Land currently owned by KNC, LLC (County Tax ID No. 2-038I-22-062.01) as per Deed Book 1093, Page 061 (Parcel 5) thereof on file in the Office of the Chancery Clerk of Forrest County,
- thence run N00°03'32"E along the East Line of said Parcel for 107.00 feet to a ¾ Inch Round Pin representing the Northeast Corner of said Parcel and the Southeast Corner of a Parcel of Land currently owned by Ronald S and Suzanne Hussy (County Tax ID No. 2-038I-22-060.00) as per Deed Book 952, Page 733 thereof on file in the Office of the Chancery Clerk of Forrest County,
- thence run N00°08'09"W along the East Line of said Parcel for 101.16 feet to the Northeast Corner of said Parcel and the Southeast Corner of a Parcel of Land currently owned by Johnny and Pamela Coleman (County Tax ID No. 2-038I-22-058.00) as per Deed Book 841, Page 355 thereof on file in the Office of the Chancery Clerk of Forrest County,
- thence continue N00°08'09"W along the East Line of said Parcel for 94.08 feet to the Northeast Corner of said Parcel and the Southeast Corner of a Parcel of Land currently owned by William Carey University (County Tax ID No. 2-038I-22-057.00) as per Deed Book 1114, Page 346 thereof on file in the Office of the Chancery Clerk of Forrest County,
- thence continue N00°08'09"W along the East Line of said Parcel for 229.62 feet to the Northeast Corner of said Parcel and a Point on the North Line of said High-Land Park Subdivision and said Southern Right of Way Line of County Drive,

- thence run N89°55'30"E along said Southern Right of Way Line of County Drive for 37.44 feet to the **Point of Beginning**,
- comprising 0.89 Acres (38,787 Square Feet), more or less,
- said Parcel as described above being wholly and completely situated on or in said Parcel of Land currently owned by Welkin Enterprises, LLC (County Tax ID No. 2-038I-22-056.00 & 2-038I-22-063.00) as referenced above.

See Exhibit "A"

The Grantee herein is given the right to do whatever may be necessary or proper for the enjoyment of the rights herein granted, including the right of ingress and the right to clear said Right-of-Way so selected of such shrubs, trees, and other vegetation as may be necessary.

I/we fully understand that we have the right to request that a fair market value appraisal of the property be made and I/we hereby waive that right. I/we further understand that we have the right to receive just compensation for the real property herein described based on an appraisal of said property. I/we hereby waive our right to just compensation and donate the real property herein described to the City of Hattiesburg.

It is further understood and agreed that this instrument constitutes the entire agreement between the grantor and the grantee, there being no oral agreements or representations of any kind.

The conveyance is subject to any and all easements for public utilities that belong to the City of Hattiesburg as presently laid out, constructed or in use.

Witness (my) (our) signature this the 6th day of May A.D., 20 13

Signature/Date: [signature] 5/6/13
Print Name: ~~Cesar Potenza,~~
Welkin Enterprises, LLC

Signature/Date: Dr Barbara T Mauldin 5/6/13
Print Name: Dr Barbara T Mauldin
Welkin Enterprises, LLC

STATE OF MISSISSIPPI

COUNTY OF FORREST

Personally appeared before me, the undersigned authority in and for the said County and State, on this 6th day of May, 2013 within my jurisdiction, the within named Cesar Potenza and Dr Barbara Mauldin, who acknowledged before me that(he)(she)(they) signed, executed and delivered the above and foregoing instrument on the day and year therein as their own free and voluntary act and deed.

Rachel Cochran (NOTARY PUBLIC)

(SEAL)

My commission expires: _____

STATE OF MISSISSIPPI
RACHEL COCHRAN
NOTARY PUBLIC
ID No. 102253
My Comm. Expires:
May 19, 2016
PERRY COUNTY

(SHORT) CEDAR STREET ROW
CHECK PLAT

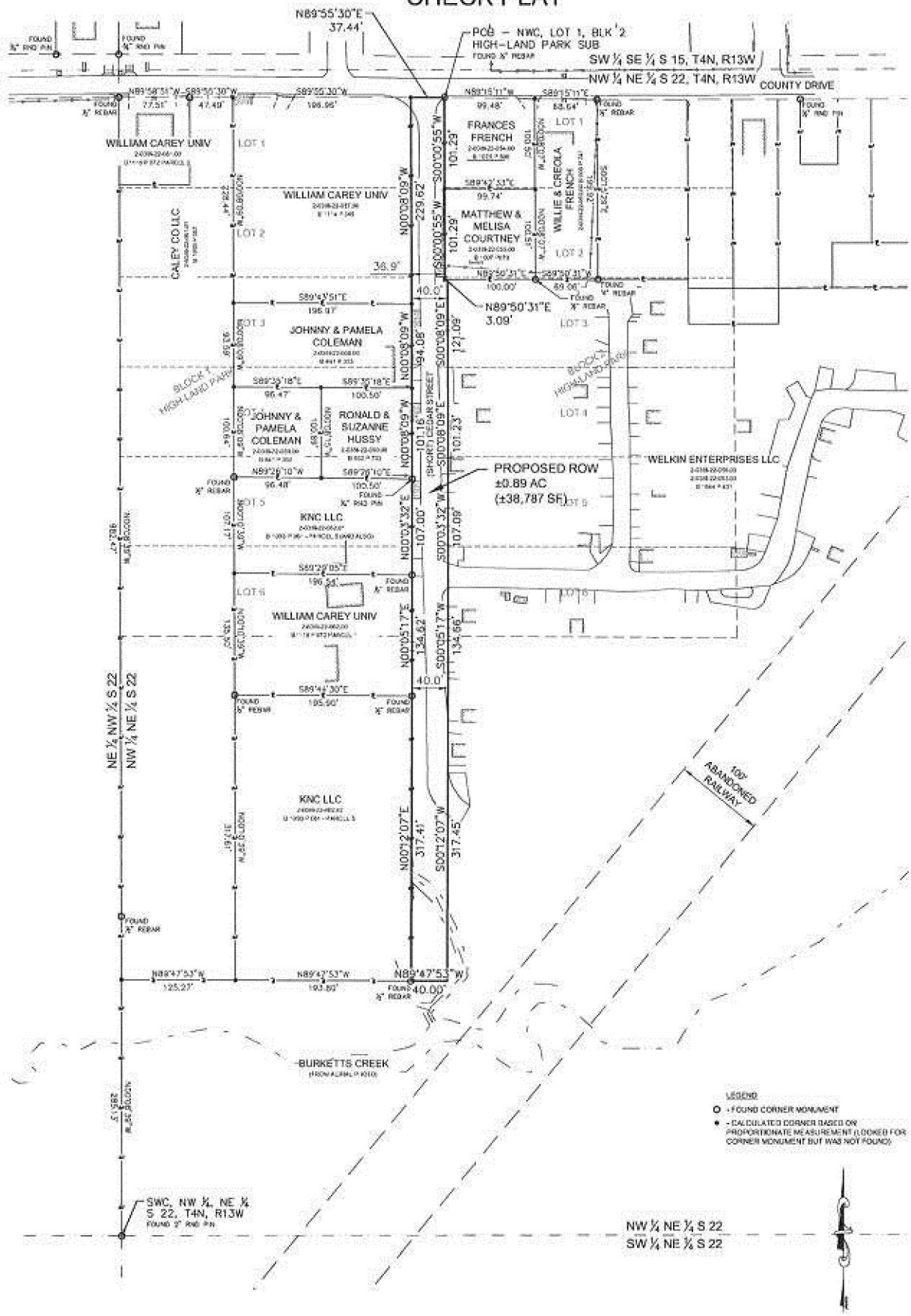

EXHIBIT "A"

GRAPHIC SCALE

(IN FEET)
1 inch = 100 ft.

sdw
Engineering Progress

DISCLAIMER:
THIS IS NOT A LEGAL SURVEY

DATE: 02-28-2013
DWG NO.: 1235-059

G:\PROJECTS\Hattiesburg, City of\1235-059 - Cedar Street Row Description\1235059.dwg\1235059_prop.dwg, Map, 3/4/2013 8:19:23 AM

City of Hattiesburg, MS

200 Forrest St.
P.O. Box 1898
Hattiesburg, MS 39401

Master

File Number: 2013-0302

File ID: 2013-0302 **Type:** Regular Agenda Item **Status:** Agenda Ready

Version: 1 **Reference:** **In Control:** City Council

File Created: 05/28/2013

Brief Title: Acknowledge receipt of the bid on May 16, 2013 for Term Bid Item #17 - Uniforms for the Hattiesburg Fire Department and accept the bid as per recommendation

Final Action:

Minute Book Number: MB2013-162

Title:

Acknowledge receipt of the bid on May 16, 2013 for Term Bid Item #17 - Uniforms for the Hattiesburg Fire Department and accept the bid as per recommendation as the only bid received that meet the City's advertised specifications.

Notes:

Sponsors:

Enactment Date:

Attachments: 06-04-Accept PS 17

Enactment Number:

Contact:

Meeting Date: 06/04/2013

Drafter:

Effective Date:

History of Legislative File

Version:	Acting Body:	Date:	Action:	Sent To:	Due Date:	Return Date:	Result:
1	City Council	06/04/2013					

Text of Legislative File 2013-0302

Title

Acknowledge receipt of the bid on May 16, 2013 for Term Bid Item #17 - Uniforms for the Hattiesburg Fire Department and accept the bid as per recommendation as the only bid received that meet the City's advertised specifications.

Summary

Acknowledge receipt of the bid on May 16, 2013 for Term Bid Item #17 - Uniforms for the Hattiesburg Fire Department and accept the bid as per recommendation

Mayor
Johnny L. DuPree, Ph.D.

Council - Ward 1	Council - Ward 2	Council - Ward 3	Council - Ward 4	Council - Ward 5
Kim Bradley	*Deborah Denard Delgado*	*Carter Carroll*	*Dave J. Ware, II*	*Henry Naylor*

MEMORANDUM

TO: Mayor and Council

FROM: Verlina Underwood, Purchasing Manager

DATE: May 28, 2013

SUBJECT: Term Bids

After review of the bid received from the vendor on May 16, 2013 for purchases of commodities required in the operation of the Hattiesburg Fire Department, it is my recommendation that the following action be taken in acceptance of bids for the following item:

Item # 17 - Uniform Items - Accept the bid of B & F Distributors for Tru Spec Trousers, Polo Shirts, T-Shirts, Sports Shirts, Rocky Shoes, Ball Caps, Shoulder Boards, and Watch Caps as the only bid received.

Should you have any questions concerning this recommendation, please contact my office.

UNIFORM ITEMS	COST/EACH BY SIZE
FECHHEIMER 34800, DRESS COAT/DARK NAVY SILVER OR GOLD FD BUTTONS – ALL SIZES, & DEPARTMENT PATCH SEWN ON LEFT SLEEVE, MEST BE ABLE TO SEW MALTESE CROSSES AND RANK PIPING ABOVE CUFFS AS NEEDED	S M L NB XL 2XL 3XL
FECHHEIMER 34291, DRESS TROUSERS POLYESTER/WOOL DARK NAVY WITH 3/8" FLUTED RED OR GOLD FLUITED PIPING SEWN INTO THE WAISTBAND – ALL SIZES	S M L NB XL 2XL 3XL
FECHHEIMER 59130WP DUTY JACKET, DARK NAVY WITH DEPARTMENT PATCH SEWN ON LEFT SLEEVE – ALL SIZES	S M L NB XL 2XL 3XL
FECHHEIMER 3900, TROUSERS, DARK NAVY WITH GOLD FLUITED PIPING SEWN INTO THE WAISTBAND ALL SIZES	S M NB L XL 2XL 3XL
TRU SPEC 24-7 1000 SERIES TROUSERS, DARK NAVY & KHAKI, ALL SIZES	Sizes S $39.44 28-44 M $39.44 28-44 L $39.44 28-44 XL $39.44 28-44 2XL $43.38 46-54 3XL $43.38 46-54
DRESS SHIRT, SHORT SLEEVE SOUTHEASTERN 9203/L9203 WHITE DEPARTMENT PATCH SEWN ON LEFT SLEEVE, ALL SIZES	S M L NB XL 2XL 3XL

DRESS SHIRT, LONG SLEEVE SOUTHEASTERN 9103/L9103 WHITE DEPARTMENT PATCH SEWN ON LEFT SLEEVE, ALL SIZES	S M NB L XL 2XL 3XL
DRESS SHIRT, SHORT SLEEVE SOUTHEASTERN 3200 SERIES, DARK NAVY, DEPARTMENT PATCH SEWN ON LEFT SLEEVE, ALL SIZES	S M NB L XL 2XL 3XL
DRESS SHIRT, LONG SLEEVE SOUTHEASTERN 3100 SERIES, DARK NAVY & LIGHT BLUE, DEPARTMENT PATCH SEWN ON LEFT SLEEVE, ALL SIZES	S M NB L XL 2XL 3XL
5.11TACTICAL PERFORMANCE POLO, 71049 SHORT SLEEVE, WHITE WITH NAME AND RANK EMBROIDERY, ALL SIZES	S $50.35 M $50.35 L $50.35 XL $50.35 2XL $52.49 3XL $52.49
5.11TACTICAL PERFORMANCE POLO, 72049 LONG SLEEVE, WHITE WITH NAME AND RANK EMBROIDERY, ALL SIZES	S $51.47 M $51.47 L $51.47 XL $51.47 2XL $52.39 3XL $52.39
TRU-SPEC 24-7 4300 SERIES SHORT SLEEVE POLO, GRAY & NAVY WITH RANK EMBROIDERY, ALL SIZES	S $38.20 M $38.20 L $38.20 XL $38.20 2XL $38.20 3XL $38.20

TRU-SPEC 24-7 4300 SERIES SHORT SLEEVE POLO, GRAY & NAVY WITH RANK EMBROIDERY, ALL SIZES	S $38.20 M $38.20 L $38.20 XL $38.20 2XL $38.20 3XL $38.20
TRU-SPEC 24-7 4300 SERIES LONG SLEEVE POLO, GRAY & NAVY WITH RANK EMBROIDERY, ALL SIZES	S $39.50 M $39.50 L $39.50 XL $39.50 2XL $40.50 3XL $40.50
T-SHIRTS, GILDAN 8000, DARK NAVY WITH DEPARTMENT SCREEN PRINTING ON FRONT AND BACK, ALL SIZES	S $7.47 M $7.47 L $7.47 XL $7.47 2XL $8.47 3XL $8.47
FLEECE JACKETS DARK NAVY WITH DEPARTMENT EMBROIDERY, R HERO'S 505, ALL SIZES	S M NB L XL 2XL 3XL
SHORTS SPORT-TEK ST312 POSICHARGE TOUGH MESH POCKET, ALL COLORS	S $12.48 M $12.48 L $12.48 XL $12.48 2XL $14.79 3XL $14.79

ACADEMY ITEMS	
POLO SHIRT, BAW-CT770 CRESCENT COOL TECH, ALL COLORS, INCLUDING EMBROIDERY	S M NB L XL 2XL 3XL
TEE SHIRT, SPORT-TEK ST350 COMPEDITOR TEE SS, ALL COLORS, INCLUDING SCREEN PRINTING	S $8.78 M $8.78 L $8.78 XL $8.78 2XL $11.76 3XL $11.76
TEE SHIRT, SPORT-TEK ST350LS COMPEDITOR TEE LS, ALL COLORS, INCLUDING SCREEN PRINTING	S $9.49 M $9.49 L $9.49 XL $9.49 2XL $12.76 3XL $12.76
TEE SHIRT, PORT & COMPANY PC55 50/50 COTTON POLY/TEE SHIRT, COLOR NAVY, INCLUDING SCREEN PRINTING	S $8.06 M $8.06 L $8.06 XL $8.06 2XL $9.75 3XL $9.75
TOTAL	$ 549.73
UNIFORM ACCESSORIES	

BELT, DUTY MAN 1311 BLACK, VELCRO, ALL SIZES	NB
BELT, DUTY MAN 1611 BLACK, BUCKEL, ALL SIZES	NB
SOCKS WHITE OR BLACK, CREW TYPE, THORLO WGX SERIES	NB
SOCKS WHITE OR BLACK, OVER THE CALF, THORLO TWD SERIES	NB
SHOES, ROCKY 2034 ALL SIZES	$68.00
SHOES, MAGNUM DUTY LITE GLOSS 5098, ALL SIZES	NB

BOOTS, MAGNUM MIDNITE PLUS 6" 5248, ALL SIZES	NB
BOOTS, MAGNUM STEALTH BLACK 8" 5220, ALL SIZES	NB
BOOTS, MAGNUM STEALTH BLACK 8" SIDE ZIP 5198, ALL SIZES	NB
NECK-TIE, TIE-ON, NAVY BLUE, SAMUAL BROOME 90078	NB
NECK TIE, CLIP-ON, NAVY BLUE, SAMUAL BROOME 90043	NB
BALL CAP, NAVY BLUE, 6-PANEL MESH, WITH 3"W X 2"H HFD EMBROIDERY, PORT AUTHORITY C833	$ 7.49

FIVE CROSSED BUGLE SHOULDER BOARD, GOLD/ MIDNIGHT, PR, PREMIER S1510	$ 7.29
FOUR CROSSED BUGLE SHOULDER BOARD, GOLD/ MIDNIGHT, PR, PREMIER S1508	$ 7.29
THREE CROSSED BUGLE SHOULDER BOARD, GOLD/ MIDNIGHT, PR, PREMIER S1506	$ 7.29
WATCH CAP, ACRYLIC, NAVY, WITH 2"W HFD EMBROIDERY (SAME AS CAP), EMBLEM ENTERRISES 6849	S $ 8.79 M $ 8.79 L $ 8.79 XL $ 8.79 2XL $ 8.79 3XL $ 8.79
TOTAL	$ 106.15

B & F Distributors LLC
(Tactical Store)

NAME OF COMPANY

103 Broadway Drive Hattiesburg, MS 39401
CITY/STATE & ZIP CODE

601 544-4463 C. 601 310-4156
PHONE NUMBER & FAX NUMBER

May 16, 2013

DATE OF BID

Dessie Minor – President

OFFICIAL'S NAME & TITLE

Dessie Minor

OFFICIAL'S SIGNATURE

City of Hattiesburg, MS

200 Forrest St.
P.O. Box 1898
Hattiesburg, MS 39401

Master

File Number: 2013-0309

File ID:	2013-0309	**Type:**	Regular Agenda Item	**Status:**	Agenda Ready
Version:	1	**Reference:**		**In Control:**	City Council
				File Created:	05/28/2013
Brief Title:	Notice of Availability & Request for Proposals - Public Service Grants			**Final Action:**	
				Minute Book Number:	MB2013-162

Title:

Authorize and approve publication of Notice of Availability and Request for Proposals for Public Service Grant funds in connection with the City of Hattiesburg's Community Development Block Grant Program (CDBG). {Entitlement}

Notes:

Sponsors:		**Enactment Date:**	
Attachments:	CDBG PUBLIC SERVICE APPLICATION FORM to Accompany RFP, NOA.PubServiceGrants June 2013, executed NOA.PubServiceGrants June 2013	**Enactment Number:**	
Contact:		**Meeting Date:**	06/04/2013
Drafter:	Anita Bratcher	**Effective Date:**	

History of Legislative File

Version:	Acting Body:	Date:	Action:	Sent To:	Due Date:	Return Date:	Result:
1	City Council	06/04/2013					

Text of Legislative File 2013-0309

Title

Authorize and approve publication of Notice of Availability and Request for Proposals for Public Service Grant funds in connection with the City of Hattiesburg's Community Development Block Grant Program (CDBG). {Entitlement}

Summary

Notice of Availablity & Request for Proposals - Public Service Grants

Budget Information

Expenditure Type

Purchasing Item

Publication Information

Publish in Hattiesburg American on Friday, June 7 and 14, 2013

CITY OF HATTIESBURG – FEDERAL & STATE PROGRAMS
CDBG PUBLIC SERVICE APPLICATION FORM

GENERAL INFORMATION

Date: ___/_____/_____

Organization Name:_____

Organization Representative:_____

Telephone: _____Email:_____

DUNS Number (Required) _____

Is the Agency/Organization a registered 501c(3)? YES NO

Proposed Grant Activities:
1._____
2._____
3._____

Numeric Goals & Objectives as stated in the statement of work:
1._____
2._____
3._____

Does the applicant agree that **progress reports** will be submitted to the City of Hattiesburg on a quarterly basis (or more frequently if requested) for the entirety of the grant period? YES NO

How many people are projected to directly benefit from this service?_____

Who is the intended clientele of this service?_____

RECORD KEEPING

Is the agency capable of maintaining detailed client records for accurately reporting its accomplishments? YES NO

Is the agency aware of the requirement to verify the household income of clients when the activity is intended to benefit low- to moderate-income individuals? YES NO

Is the agency capable of properly documenting household income verification data? YES NO

Will the agency rely on the most current HUD Income Limits (currently 2010)? YES NO

Does the agency have a system for identifying "New" unduplicated clients? YES NO
If no, explain steps sub-grantee will take to establish such a system: _____
_____
_____

CONTRACTUAL COMPLIANCE:

Grantor Recognition: Is the agency capable of "prominently labeling" activities, facilities, items utilized, and all publications made possible as a result of the grant (i.e. CDBG-funded by the City of Hattiesburg)? YES NO

When applicable, is the organization capable of abiding by Section 3 requirements (12 USC 1701, Housing and Urban Development Act, and 24 CFR 135) requiring that to the greatest extent feasible opportunities for training and employment be given to lower income residents of the project area and contracts for work in connection with the project will be awarded to businesses located in or owned in substantial part by persons residing in the areas of the project. YES NO

If applicable construction is a part of the grant activity, is the agency capable of abiding by the requirements of the Davis-Bacon Act? N/A YES NO

Have any fair housing concerns been filed against the agency? YES NO

If so, provide the current status of the concern of complaint:_____

_____

If applicable, is the fair housing logo displayed in program materials? N/A YES NO

EMPLOYEE RELATIONS

Does the agency have an employment application? YES NO

Does the organization have written employment and personnel policies for review? YES NO

Does the organization have policies/procedures to address personnel complaints? YES NO

Are EEO Posters utilized? YES NO

RECORDKEEPING AND DOCUMENTATION

An agreement between the City and a subgrantee/subrecipient must specify that records/documents be maintained including:

- Description of activities to be taken;
- Information indicating that a National Objectives is being met by the activities conducted;
- Eligibility information demonstrating eligibility of activities;
- Documents on use of CDBG funds for acquisition/improvement/use/disposition of property
- Documents showing compliance with fair housing, affirmative action; equal opportunity requirements;
- Financial records;
- Other records (per Subpart K; 24 CFR 570): labor, environmental standards; National Flood Insurance; displacement/relocation/acquisition/replacement of housing; employment/contracting opportunities; lead-based paint; debarred contractors; cost principles, conflict of interest.

Is the agency capable of maintaining applicable records? YES NO

Will records be maintained for five years after termination of activities funded under this agreement? YES NO

FINANCIAL INFORMATION:

Does sub-grantee have a current audit including a management letter available for review? YES NO

If not, explain:_____

Are there any outstanding audit issues ? YES NO

If yes, explain and describe how issues will be resolved_____

_____

Does the agency have written procedures for approving and recording transactions? YES NO

Is there a separation of financial functions (approving purchases, recording transactions, etc.)? YES NO

Does the agency have the components of a financial management system including a chart of accounts, general ledgers, reconciliation, etc.? YES NO

Is the agency aware that draws against a grant are only available on a reimbursement basis, for eligible expenses agreed upon in the program budget, and supported by adequate documentation submitted to the City (time sheets if salary; invoices if supply or equipment purchased, etc.)? YES NO

Will the project produce program income? YES NO

The answer to this question will not automatically qualify or disqualify the activity. If income will be produced as a result of the activity, follow-up discussion may be necessary to clarify expectations and requirements of both parties.

If any portion of a salary will be paid with CDBG funding, is the agency capable of maintaining adequate timesheets, also documenting time spent on activities other than the CDBG-funded activity? N/A YES NO

PROCUREMENT INFORMATION

Will any of the work done under this program be contracted out? YES NO

Will price/rate quotations be obtained from an adequate number of qualified sources? YES NO

Will purchases over $25,000 be put out to formal bid? YES NO

If applicable, will the agency utilize the Department of Labor's list of Disadvantaged Enterprises? YES NO

ORGANIZATION INFORMATION:

Identify employees working on this activity:_____

_____

Will time logs be maintained? YES NO

Are employees' taxes withheld on paychecks? YES NO

Will any board members / employees or their immediate families be assisted under the proposed activity? YES NO

This application/questionnaire is intended as a means to identify qualified organizations, and in no way promises funding from any source. By signing below, the organization attests that all information contained herein is accurate, and that if granted funds, the organization will comply with all applicable regulations. Additionally, the organization understands that if information in this application is later found to be inaccurate or if the organization in any way fails to comply with CDBG requirements, the organization may be required to repay grant funds to the city's CDBG program.

Signature of Authorize Representative_____

NOTICE OF AVAILABILITY
OF COMMUNITY DEVELOPMENT BLOCK GRANT
PUBLIC SERVICE GRANT FUNDS

The City of Hattiesburg, Mississippi, in accordance with its 2013 Action Plan (a component of its 2013 – 2017 Consolidated Plan) is accepting proposals for Public Service Grant awards. Eligible organizations include nonprofit organizations operating within the City limits of Hattiesburg, Mississippi. Churches are not eligible.

Eligible activities include but are not limited to: those benefiting low to moderate income individuals, job training, crime prevention, health services, substance abuse services, education programs, services to senior citizens, services benefiting at risk youth and services benefiting the homeless. SPECIAL CONSIDERATION WILL BE GIVEN to proposals for services that will benefit/serve homeless persons and/or families or prevent homelessness. This consideration is in keeping with the goals and objectives of the 2013-2017 Consolidated Plan. All approved Public Service awards must support the goals and objectives of the 2013-2017 Consolidated Plan.

Each proposal shall be delivered to the Office of the City Clerk, P.O. Box 1898, 200 Forrest Street, Hattiesburg, Mississippi, 39403-1898, (601) 545-4552 on or before 10 a.m. June 27, 2013.

Each PROPOSAL must be received in a sealed envelope that is marked in the lower left-hand corner with the words "Request for Proposals – CDBG Public Service Grants" and the DATE OF BID OPENING, which is "June 27, 2013."

The proposals should include the following:

1. Description of the Organization to include name, address, 501 3(c) status, DUNS number, EIN number, makeup of the board, contact person and any other descriptive information available
2. Description for program for which funding is being requested
3. Proposed budget for program or activity to include other sources of funding
4. Program outcomes or benchmarks
5. City of Hattiesburg's CDBG Public Service Application Form

Proposals that fail to include all of the information above will not be considered.

Proposals must anticipate that funds will only be available through December 31, 2013. As such, plans, budgets, accomplishment estimates, etc. included as a part of the proposal should take this time limitation into consideration.

Copies of the City of Hattiesburg's CDBG Public Service Application Form are available upon request between the hours of 8:00 a.m. and 5:00 p.m. Monday through Friday at the Office of the Clerk, City Hall, Second Floor, 200 Forrest Street, Hattiesburg, MS 39401.

Questions related to this announcement should be forwarded to Andrew Ellard, Department of Federal and State Programs, City of Hattiesburg, P.O. Box 1898, Hattiesburg, Mississippi 39403-1898, or delivered to City Hall, First Floor, Department of Federal and State Programs, 200 Forrest Street, 601-554-1006.

PUBLISHED by Order of the Council on this, the 4th day of June 2013.

CITY OF HATTIESBURG, MISSISSIPPI

BY: _____
CITY CLERK

(SEAL)

Johnny L. DuPree, Mayor
PUBLISH Twice in the Non-Legal Section: Friday, June 7, 2013; Friday, June 14, 2013

NOTICE OF AVAILABILITY
OF COMMUNITY DEVELOPMENT BLOCK GRANT
PUBLIC SERVICE GRANT FUNDS

The City of Hattiesburg, Mississippi, in accordance with its 2013 Action Plan (a component of its 2013 – 2017 Consolidated Plan) is accepting proposals for Public Service Grant awards. Eligible organizations include nonprofit organizations operating within the City limits of Hattiesburg, Mississippi. Churches are not eligible.

Eligible activities include but are not limited to: those benefiting low to moderate income individuals, job training, crime prevention, health services, substance abuse services, education programs, services to senior citizens, services benefiting at risk youth and services benefiting the homeless. SPECIAL CONSIDERATION WILL BE GIVEN to proposals for services that will benefit/serve homeless persons and/or families or prevent homelessness. This consideration is in keeping with the goals and objectives of the 2013-2017 Consolidated Plan. All approved Public Service awards must support the goals and objectives of the 2013-2017 Consolidated Plan.

Each proposal shall be delivered to the Office of the City Clerk, P.O. Box 1898, 200 Forrest Street, Hattiesburg, Mississippi, 39403-1898, (601) 545-4552 on or before 10 a.m. June 27, 2013.

Each PROPOSAL must be received in a sealed envelope that is marked in the lower left-hand corner with the words "Request for Proposals – CDBG Public Service Grants" and the DATE OF BID OPENING, which is "June 27, 2013."

The proposals should include the following:

1. Description of the Organization to include name, address, 501 3(c) status, DUNS number, EIN number, makeup of the board, contact person and any other descriptive information available
2. Description for program for which funding is being requested
3. Proposed budget for program or activity to include other sources of funding
4. Program outcomes or benchmarks
5. City of Hattiesburg's CDBG Public Service Application Form

Proposals that fail to include all of the information above will not be considered.

Proposals must anticipate that funds will only be available through December 31, 2013. As such, plans, budgets, accomplishment estimates, etc. included as a part of the proposal should take this time limitation into consideration.

Copies of the City of Hattiesburg's CDBG Public Service Application Form are available upon request between the hours of 8:00 a.m. and 5:00 p.m. Monday through Friday at the Office of the Clerk, City Hall, Second Floor, 200 Forrest Street, Hattiesburg, MS 39401.

Questions related to this announcement should be forwarded to Andrew Ellard, Department of Federal and State Programs, City of Hattiesburg, P.O. Box 1898, Hattiesburg, Mississippi 39403-1898, or delivered to City Hall, First Floor, Department of Federal and State Programs, 200 Forrest Street, 601-554-1006.

PUBLISHED by Order of the Council on this, the 4th day of June 2013.

CITY OF HATTIESBURG, MISSISSIPPI

BY: Tobi P. Myers
CITY CLERK

(SEAL)

Johnny L. DuPree, Mayor

PUBLISH Twice in the Non-Legal Section: Friday, June 7, 2013; Friday, June 14, 2013

CITY OF HATTIESBURG – FEDERAL & STATE PROGRAMS
CDBG PUBLIC SERVICE APPLICATION FORM

GENERAL INFORMATION

Date: ___/____/____

Organization Name:_____

Organization Representative:_____

Telephone: _____Email:_____

DUNS Number (Required) _____

Is the Agency/Organization a registered 501c(3)? YES NO

Proposed Grant Activities:

1._____
2._____
3._____

Numeric Goals & Objectives as stated in the statement of work:

1._____
2._____
3._____

Does the applicant agree that **progress reports** will be submitted to the City of Hattiesburg on a quarterly basis (or more frequently if requested) for the entirety of the grant period? YES NO

How many people are projected to directly benefit from this service?_____

Who is the intended clientele of this service?_____

RECORD KEEPING

Is the agency capable of maintaining detailed client records for accurately reporting its accomplishments? YES NO

Is the agency aware of the requirement to verify the household income of clients when the activity is intended to benefit low- to moderate-income individuals? YES NO

Is the agency capable of properly documenting household income verification data? YES NO

Will the agency rely on the most current HUD Income Limits (currently 2010)? YES NO

Does the agency have a system for identifying "New" unduplicated clients? YES NO

If no, explain steps sub-grantee will take to establish such a system: _____

_____

_____

CONTRACTUAL COMPLIANCE:

Grantor Recognition: Is the agency capable of "prominently labeling" activities, facilities, items utilized, and all publications made possible as a result of the grant (i.e. CDBG-funded by the City of Hattiesburg)? YES NO

When applicable, is the organization capable of abiding by Section 3 requirements (12 USC 1701, Housing and Urban Development Act, and 24 CFR 135) requiring that to the greatest extent feasible opportunities for training and employment be given to lower income residents of the project area and contracts for work in connection with the project will be awarded to businesses located in or owned in substantial part by persons residing in the areas of the project. YES NO

If applicable construction is a part of the grant activity, is the agency capable of abiding by the requirements of the Davis-Bacon Act? N/A YES NO

Have any fair housing concerns been filed against the agency? YES NO

If so, provide the current status of the concern of complaint:_____

_____

If applicable, is the fair housing logo displayed in program materials? N/A YES NO

EMPLOYEE RELATIONS

Does the agency have an employment application? YES NO

Does the organization have written employment and personnel policies for review? YES NO

Does the organization have policies/procedures to address personnel complaints? YES NO

Are EEO Posters utilized? YES NO

RECORDKEEPING AND DOCUMENTATION

An agreement between the City and a subgrantee/subrecipient must specify that records/documents be maintained including:

- Description of activities to be taken;
- Information indicating that a National Objectives is being met by the activities conducted;
- Eligibility information demonstrating eligibility of activities;
- Documents on use of CDBG funds for acquisition/improvement/use/disposition of property
- Documents showing compliance with fair housing, affirmative action; equal opportunity requirements;
- Financial records;
- Other records (per Subpart K; 24 CFR 570): labor, environmental standards; National Flood Insurance; displacement/relocation/acquisition/replacement of housing; employment/contracting opportunities; lead-based paint; debarred contractors; cost principles, conflict of interest.

Is the agency capable of maintaining applicable records? YES NO

Will records be maintained for five years after termination of activities funded under this agreement? YES NO

FINANCIAL INFORMATION:

Does sub-grantee have a current audit including a management letter available for review? YES NO

If not, explain:_____

Are there any outstanding audit issues ? YES NO

If yes, explain and describe how issues will be resolved_____

_____

Does the agency have written procedures for approving and recording transactions? YES NO

Is there a separation of financial functions (approving purchases, recording transactions, etc.)? YES NO

Does the agency have the components of a financial management system including a chart of accounts, general ledgers, reconciliation, etc.? YES NO

Is the agency aware that draws against a grant are only available on a reimbursement basis, for eligible expenses agreed upon in the program budget, and supported by adequate documentation submitted to the City (time sheets if salary; invoices if supply or equipment purchased, etc.)? YES NO

Will the project produce program income? YES NO

The answer to this question will not automatically qualify or disqualify the activity. If income will be produced as a result of the activity, follow-up discussion may be necessary to clarify expectations and requirements of both parties.

If any portion of a salary will be paid with CDBG funding, is the agency capable of maintaining adequate timesheets, also documenting time spent on activities other than the CDBG-funded activity? N/A YES NO

PROCUREMENT INFORMATION

Will any of the work done under this program be contracted out? YES NO

Will price/rate quotations be obtained from an adequate number of qualified sources? YES NO

Will purchases over $25,000 be put out to formal bid? YES NO

If applicable, will the agency utilize the Department of Labor's list of Disadvantaged Enterprises? YES NO

ORGANIZATION INFORMATION:

Identify employees working on this activity:_____

_____

Will time logs be maintained? YES NO

Are employees' taxes withheld on paychecks? YES NO

Will any board members / employees or their immediate families be assisted under the proposed activity? YES NO

This application/questionnaire is intended as a means to identify qualified organizations, and in no way promises funding from any source. By signing below, the organization attests that all information contained herein is accurate, and that if granted funds, the organization will comply with all applicable regulations. Additionally, the organization understands that if information in this application is later found to be inaccurate or if the organization in any way fails to comply with CDBG requirements, the organization may be required to repay grant funds to the city's CDBG program.

Signature of Authorize Representative_____

City of Hattiesburg, MS

200 Forrest St.
P.O. Box 1898
Hattiesburg, MS 39401

Master

File Number: 2013-0303

File ID: 2013-0303 **Type:** Regular Agenda Item **Status:** Agenda Ready

Version: 1 **Reference:** **In Control:** City Council

File Created: 05/28/2013

Brief Title: Approve Specifications for Mass Notification System #6 (Country Club Area Warning Siren) and authorize advertisement for bids for same.

Final Action:

Minute Book Number: MB2013-163

Title:

Approve Specifications for Mass Notification System #6 (Country Club Area Warning Siren) and authorize advertisement for bids for same.

Notes:

Sponsors:

Enactment Date:

Attachments: 11211_signed specs, 11211_advertisment for bids.2, executed 11211_advertisment for bids.2

Enactment Number:

Contact:

Meeting Date: 06/04/2013

Drafter: Sharon Waits

Effective Date:

History of Legislative File

Version:	Acting Body:	Date:	Action:	Sent To:	Due Date:	Return Date:	Result:
1	City Council	06/04/2013					

Text of Legislative File 2013-0303

Title

Approve Specifications for Mass Notification System #6 (Country Club Area Warning Siren) and authorize advertisement for bids for same.

Summary

Approve Specifications for Mass Notification System #6 (Country Club Area Warning Siren) and authorize advertisement for bids for same.

Budget Information

Expenditure Type

Purchasing Item

Publication Information

Hattiesburg American and Clarion Ledger
June 12, 2013
June 19, 2013

SPECIFICATIONS
and
CONTRACT DOCUMENTS

for

Mass Notification System #6

CITY of HATTIESBURG, MISSISSIPPI

May 2013

PREPARED BY:

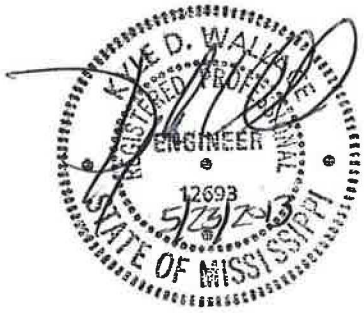

sdw
Engineering Progress

P.O. BOX 1711 - 301 SECOND AVENUE
HATTIESBURG, MISSISSIPPI 39403-1711
601-544-1821
601-544-0501-FAX
WWW.SD-W.COM

TABLE of CONTENTS ..... Page
ADVERTISEMENT for BIDS 1
INSTRUCTIONS to BIDDERS 2
PROPOSAL 6
BID BOND 8
CONTRACT AGREEMENT 10
PAYMENT BOND 14
PERFORMANCE BOND 17
NOTICE OF AWARD 20
NOTICE TO PROCEED 21
GENERAL CONDITIONS 22
DEFINITIONS 22
PRELIMINARY MATTERS 24
CORRELATION, INTERPRETATION and INTENT of CONTRACT DOCUMENTS 26
AVAILABILITY OF LANDS; SUBSURFACE CONDITIONS; REFERENCE POINTS 27
BONDS AND INSURANCE 28
CONTRACTOR'S RESPONSIBILITIES 29
WORK BY OTHERS 36
OWNER'S RESPONSIBILITIES 37
ENGINEER'S STATUS DURING CONSTRUCTION 38
CHANGES IN WORK 40
CHANGE OF CONTRACT PRICE 40
CHANGE OF CONTRACT TIME 44
GUARANTY 45
PAYMENTS AND COMPLETION 45
SUSPENSION OF WORK AND TERMINATION 47
ARBITRATION 49
MISCELLANEOUS 49
SITE LOCATION 52
TECHNICAL SPECIFICATIONS .....
ELECTRICAL ..... DIVISION 16
GENERAL PROVISIONS ..... SECTION 16000
BASIC MATERIALS AND METHODS ..... SECTION 16100
RACEWAYS ..... SECTION 16200
GROUNDING ..... SECTION 16250
CONDUCTORS ..... SECTION 16300
POWER DISTRIBUTION EQUIPMENT ..... SECTION 16400
ELECTRICAL SERVICE ..... SECTION 16600
OVERHEAD DISTRIBUTION SYSTEM ..... SECTION 16650
MECHANICAL SYSTEM WIRING ..... SECTION 16800
EMERGENCY OUTDOORS VOICE & SIREN WARNING AND SYSTEM ..... SECTION 16715
CONSTRUCTION NOTES 1-3
SITE LOCATION DRAWINGS 1-2
ELECTRICAL DETAILS BY SITE 1-2
HIGH POWER VOICE & SIREN SYSTEM INSTALLATION MANUAL 1-44

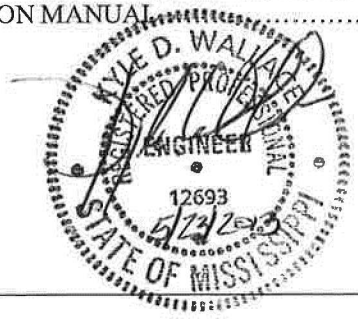

ADVERTISEMENT for BIDS

NOTICE is hereby given that the City Clerk of the City of Hattiesburg, Mississippi, will receive sealed bids until _____ in the City Clerk's office in the City Hall of said city for furnishing the city's requirement for the following:

MASS NOTIFICATION SYSTEM #6
HATTIESBURG, MISSISSIPPI

Plans, specifications and proposal forms may be obtained from Shows, Dearman and Waits, Inc., P.O. Box 1711, 301 Second Avenue, Hattiesburg, Mississippi, 39403, upon a non-refundable deposit of $50.00. All bids must be accompanied by a bid security equal to five percent (5%) of the amount of the bid in the form of a certified check, cashier's check, or a bid bond written by a company properly licensed in Mississippi.

The successful bidder will be required to furnish a contract bond written by a company licensed in Mississippi. The bond will be in the amount equal to One Hundred Percent (100%) of the contract amount.

Each BID must be received in a sealed envelope which is marked in the lower left-hand corner EXACTLY as follows:

BID:

MASS NOTIFICATION SYSTEM #6
HATTIESBURG, MISSISSIPPI

No bid may be withdrawn for a period of sixty (60) days. The lowest and best proposal received will be accepted, subject to the provisions of Section 31-7-14 of the Mississippi Code of 1972, annotated and amended, and other applicable state law; but the council reserves the right to reject any or all proposals received and to waive informalities.

PUBLISHED by Order of the Council on the ___day of_____, A.D., 2013.

CITY of HATTIESBURG, MISSISSIPPI

BY:_____
Eddie R. Myers, City Clerk

INSTRUCTIONS to BIDDERS

1.0 Bids will be received by **CITY of HATTIESBURG** herein called the "**OWNER**," at **City Clerk's office at the City Hall** until 10:00AM, _____, and then at said office publicly opened and read aloud.

2.0 Each sealed envelope containing a bid in excess of fifty thousand dollars ($50,000) must be plainly marked on the outside as: "**BID for Mass Notification System #6.**"

2.1 Sealed Bids Hand Delivered
The outside of the sealed bid envelope must bear the name of the bidder, bidder's complete address, "Certificate of Responsibility Number," and the name of the project for which the bid is submitted.

2.2 Sealed Bids Mailed
The outside of the sealed bid envelope must bear the name of the bidder, bidder's complete address, "Certificate of Responsibility Number," and the name of the project for which the bid is submitted.

The sealed bid envelope (containing the bid) must then be enclosed in a carrier envelope addressed to the OWNER.

2.3 No bid will be opened, considered, or accepted unless the above stated information is given as specified.

3.0 When required by the OWNER, sufficient evidence must be submitted that said "Certificate of Responsibility" has been issued and is in effect at the time of receiving bids.

4.0 All bids must be made on the required bid form (enclosed). All spaces, including blank spaces, for bid prices must be completed in ink or typewritten and the bid form must be fully completed and executed when submitted. Only one copy of the bid form is required.

5.0 The contract will be awarded on the basis of the low base bid or low combination of base bid and those alternatives which produce a total within available funds. The OWNER reserves the right to waive irregularities and to reject any or all bids. The OWNER reserves the right to award to a bidder other than the low bidder when, in the OWNER'S judgment, it is in his best interest to do so. Three such reasons may be, but are not limited to: (1) bidder being in arrears on existing contracts; (2) bidder being in litigation with the OWNER; (3) bidder having defaulted on a previous contract. Any bid may be withdrawn prior to the above scheduled time for the opening of bids or authorized postponement thereof. No bidder may withdraw a bid within 60 days after the actual date of the opening thereof. Should there be reasons why the contract cannot be awarded within the specified period; the time may be extended by mutual agreement between the OWNER and the bidder.

6.0 Bidders must satisfy themselves of the accuracy of the estimated quantities in the bid schedule by examination of the site and a review of the contract documents, including "ADDENDA." After bids have been submitted, the bidder shall not assert that there was a misunderstanding concerning the quantities of work or of the nature of the work to be done.

7.0 If any person contemplating the submission of a bid for the proposed contract is in doubt as to the true meaning of any part of the plans, specifications, or other proposed contract documents, submit a written request for an interpretation thereof to:

Shows, Dearman & Waits, Inc.
Attn: Kyle D. Wallace, P.E.
P.O. Box 1711
Hattiesburg, MS 39403

7.1 The written request for clarification must be received at least ten (10) days prior to the date fixed for opening of bids.

7.2 Any interpretation of the contract documents will be made by the "ADDENDA" duly issued to each person receiving a set of such documents not later than forty-eight (48) hours prior to the time of opening of bids, excluding weekends and legal holidays.

7.3 The OWNER will not be responsible for explanations or interpretations of proposed documents, except as issued in accordance herewith.

8.0 The OWNER shall provide to bidders prior to bidding all information that is pertinent to, delineates, and describes the land owned as well as rights-of-way acquired or to be acquired.

9.0 The "Contract Documents" contain the provisions required for the construction of the project. Information obtained from an officer, agent, or employee of the OWNER or any other person shall not affect the risks or obligations assumed by the contractor or relieve contractor from fulfilling any of the conditions of the "Contract Agreement."

10.0 Each bid must be accompanied by a "Bid Bond" payable to the OWNER for five percent (5%) of the total amount of the bid. As soon as the bid prices have been compared, the OWNER will return all the said bonds except the bonds from the three (3) lowest responsive, responsible bidders. When the "Contract Agreement" is executed, the said bonds of the two remaining unsuccessful bidders will be returned. The "Bid Bond" of the successful bidder will be retained until the "Payment Bond," "Performance Bond," and "Certificates of Insurance" have been executed and approved, after which the "Bid Bond" will be returned to the successful bidder. A certified check may be used in lieu of a "Bid Bond."

11.0 A "Payment Bond," and "Performance Bond," each in the amount of one hundred percent (100%) of the contract price along with an owner-approved corporate surety that is listed on the US Treasury Department's most current list (Circular 570, as amended) will be required for the faithful performance of the contract.

12.0 Attorneys-in-fact who sign the "Bid Bond," "Payment Bond," and "Performance Bond" must file with each said bond a certified and effective-dated copy of their "Power of Attorney."

13.0 The party to whom the contract is awarded will be required to execute the "Contract Agreement" and obtain and submit the "Performance Bond," "Payment Bond," and "Certificate of Insurance" within ten (10) calendar days from the date when "Notice of Award" is delivered to the bidder. The "Notice of Award" shall be accompanied by the required "Contract Agreement" and said bond forms. In case of failure of the bidder to execute and submit the "Contract Agreement," "Performance Bond,"

"Payment Bond," and "Certificate of Insurance," the OWNER may - at his option - determine the bidder in default, in which case the "Bid Bond" accompanying the proposal shall become the property of the OWNER.

14.0 The OWNER within ten (10) calendar days of receipt of acceptable "Performance Bond," "Payment Bond," Certificate of Insurance," and "Contract Agreement" signed by the party to whom the "Contract Agreement" was awarded, shall sign the "Contract Agreement" and return to such party an executed duplicate of the "Contract Agreement" and issue a "Notice to Proceed." Should the OWNER not execute the "Contract Agreement" within such stated period, the bidder may by written notice withdraw his signed "Contract Agreement" without further liability on the part of either party. Such notice of withdrawal shall be effective upon receipt of the notice by the OWNER. Should there be reason(s) the "Notice to Proceed" cannot be issued within such stated period, the time may be extended by mutual agreement between the OWNER and contractor. If the "Notice to Proceed" has not been issued within the ten (10) calendar day period or within the period mutually agreed upon between OWNER and contractor, the contractor may terminate the "Contract Agreement" without further liability on the part of either party.

15.0 The OWNER may make such investigations as he deems necessary to determine the ability of the bidder to perform the work, and the bidder shall furnish to the OWNER all such information and data for this purpose as the OWNER may request. The OWNER reserves the right to reject any bid if the evidence submitted by, or investigation of, such bidder fails to satisfy the OWNER that such bidder is properly qualified to carry out the obligations of the "Contract Agreement" and to complete the work contemplated therein.

16.0 A conditional (to qualify) bid will not be accepted.

17.0 Award will be made to the lowest responsible, responsive bidder. (See herein paragraph 5.0.)

18.0 All applicable laws, ordinances, and the rules and regulations of all authorities having jurisdiction over construction of the stated project shall apply to the "Contract Agreement" throughout.

19.0 The failure or omission of any bidder to do any of the foregoing shall in no way relieve any bidder from any obligation in respect to his bid.

20.0 Further, the bidder agrees to abide by the requirements under Executive Order No. 11246, as amended, including specifically the provisions of the equal opportunity clause set forth in the supplemental "General Conditions."

21.0 Non-Resident Contractor

When a non-resident contractor submits a bid for a Mississippi public project, he shall attach thereto a copy of his resident state's current law pertaining to such state's treatment of non-resident contractors as required by House Bill Number 850, Chapter Number 527, Laws of 200588.

22.0 Telegraphic Modifications

Any bidder may modify his bid by telegraphic communication at any time, provided such communication is received prior to the scheduled bid opening. Written confirmation must be received within two (2) days after the scheduled bid opening or no consideration will be given the telegraphic modifications.

23.0 Resident Labor Used on Public Works
Each bidder must inform himself of the requirements and provisions of Sections 31-5-17, 31-5-2005 and 31-5-21 of the Mississippi Code of 200572, which require the use of Mississippi resident labor on this public works project.

24.0 The contractor shall submit with the proposal the following list of information

a) A list of 3 relevant projects completed within the last five years.

b) A list of current personnel available for the project.

c) A list of current equipment available for the project.

*****ANY PROPOSAL WITHOUT THE REQUIRED SUBMITTAL SHALL BE SUBJECT TO DISQUALIFICATION*****

PROPOSAL

Proposal of _____ (hereinafter called "BIDDER"), organized and existing under the Laws of the State of _____ doing business as _____*. To the City of Hattiesburg (hereinafter called "OWNER").

In compliance with your Advertisement for BIDS, BIDDER hereby proposes to perform all WORK for the construction of **MASS NOTIFICATION SYSTEM #6** in strict accordance with the CONTRACT DOCUMENTS, within the time set forth therein, and at the prices stated below.

By submission of this BID, each BIDDER certifies, and in the case of a joint BID each party thereto certifies as to his own organization, that this BID has been arrived at independently, without consultation, communication, or agreement as to any matter relating to this BID with any other BIDDER or with any competitor.

BIDDER hereby agrees to commence WORK under this contract on or before a date to be specified in the NOTICE TO PROCEED and to fully complete the PROJECT within **60** consecutive calendar days thereafter. BIDDER further agrees to pay as liquidated damages in the amount of $ **300.00** for each consecutive calendar day thereafter as provided in Section 15.9 of the General Conditions.

BIDDER acknowledges receipt of the following ADDENDA:

_____

_____

_____

***Insert "a corporation", "a partnership", or "an individual" as applicable.**

In Compliance with your invitation for Bids, the undersigned hereby propose(s) to furnish materials and perform the work listed below in strict accordance with the Invitation for Bids,

materials and perform the work listed below in strict accordance with the Invitation for Bids, Plans, General and Special Provisions, Specifications and all other Contract Documents for the consideration of the following price.

BASE BID

EARLY WARNING SYSTEM identified as Site #6 for the Lump Sum amount of:

$_____
(Write price in words)

$_____
(Write in figures)

The undersigned certifies that the bid prices contained herein have been carefully checked and are submitted as correct and final.

If within thirty (30) days the scheduled closing time for receipt of bids, this Proposal is accepted, the undersigned will execute a formal contract within seven (7) days after official notification thereof, will deliver a surety bond for the faithful performance of this contract, and will complete the work within the time specified from the date of execution of the contract.

Respectfully Submitted,

_____

Name and Address of Firm or Bidder

_____

_____

_____

BID BOND

KNOWN ALL MEN BY THESE PRESENTS: that we, the undersigned, _____, as PRINCIPAL, and _____, as SURETY, are hereby held and firmly bound unto _____, as OWNER in the penal sum of _____ ($_____) for payment of which, well and truly to be made, we hereby jointly and severally bind ourselves, successors, and assigns.

Signed, this _____ day of _____, 20__.

The condition of the above obligation is such that whereas the PRINCIPAL has submitted to the **City of Hattiesburg** a certain bid, attached hereto and hereby made a part hereof, to enter into a contract in writing for the **Mass Notification System #6** project.

NOW, THEREFORE,

a) If said bid shall be rejected, or

b) If said bid shall be accepted and the PRINCIPAL shall execute and deliver a contract in the form of contract attached hereto (properly completed in accordance with said bid) and shall furnish a bond for his faithful performance of said contract and for the payment of all persons performing labor or furnishing materials in connection therewith and shall in all other respects perform the agreement created by the acceptance of said bid, then this obligation shall be void; otherwise, the same shall remain in force and effect; it being expressly understood and agreed that the liability of the SURETY for all and all claims hereunder shall, in no event, exceed the penal amount of this obligation as herein stated.

The SURETY, for value received, hereby stipulates and agrees that the obligations of said SURETY and its bond shall be in no way impaired or affected by any extension of the time within which the OWNER may accept such bid and said SURETY does hereby waive notice of any such extension.

IN WITNESS WHEREOF, the PRINCIPAL and the SURETY have hereunto set their hands and seals, and such of them as are corporations have caused their corporate seals to be hereto affixed and these presents to be signed by their proper officers, the day and year first set forth above.

(Seal) _____ (L.S.)
PRINCIPAL

(Seal) _____
SURETY

by: _____

IMPORTANT NOTE: Surety companies executing bonds must appear on the US Treasury Department's most current list (Circular 570, as amended) and be authorized to transact business in the state where the project is located.

CONTRACT AGREEMENT

THIS AGREEMENT, made this _____ day of _____, 20__, by and between **The City of Hattiesburg, Mississippi,** hereinafter called "OWNER" and _____, doing business as (an individual,) or (a partnership,) or (a corporation) hereinafter called "CONTRACTOR,"

WITNESSETH: that for and in consideration of the payments and agreements hereinafter mentioned:

ARTICLE I

Scope of Work

The CONTRACTOR agrees to furnish all tools, labor, equipment, materials, and supplies required to be furnished and perform all work required under an in accordance with the plans entitled:

MASS NOTIFICATION SYSTEM #6

CITY of HATTIESBURG

which are on file at the office of the OWNER, and the specifications, proposals, general and special conditions attached hereto and made a part hereof as fully as though copied herein, under the direct supervision and to the entire satisfaction of the OWNER and in accordance with the laws of the State of Mississippi.

ARTICLE II

The Contract Sum

It is further agreed and understood by and between the parties hereunto that the OWNER agrees to pay and the CONTRACTOR agrees to accept full and final compensation for all work done under this agreement, the lump sum amount adjusted for variation of quantities at the unit prices named in the proposal, which is hereto attached, such payment to be made in lawful money of the United States at the time and in the manner hereinafter set forth.

ARTICLE III

Time of Completion

The CONTRACTOR agrees, for the consideration above expressed, to begin and complete the work within the time specified in the proposal. If the CONTRACTOR fails to complete the work in the time specified, he shall pay the OWNER as liquidated damages, ascertained and agreed, and not in the nature of a penalty, the sum of Three Hundred Dollars ($300.00) for each day delayed, which shall be deducted from the final amount to be paid under the contract; provided that the extension of time with the waiver of liquidation damages may be granted as provided for in the specifications.

ARTICLE IV

Progress Payments

The owner agrees to make progress payments during the construction as provided herein as follows:

The Engineer will, on or before the tenth (10th) day of each month, make an estimate of the value of the work done based on contract prices.

The OWNER agrees to pay the CONTRACTOR one hundred percent (100%) of the value of the work done each month, less ten percent (10%) retainage until final acceptance of the work has been made.

ARTICLE V

Acceptance and Final Payment

Upon receipt of written notice that the work is ready for final acceptance and inspection, the Engineer shall promptly make such inspection and when he finds the work acceptable under the contract and the contract fully performed, he shall promptly issue a final certificate over his own signature stating the work provided for in the contact has been completed and is accepted by him under the terms and conditions thereof. Then, the entire balance shall be due the CONTRACTOR within thirty (30) days from the date of said final acceptance.

Before issuance of final certificate, the CONTRACTOR shall submit evidence satisfactory to the Engineer that all payrolls, materials, bills, and other indebtedness connected with the work have been paid.

The making and acceptance of the final payment shall constitute a waiver of all claims by the OWNER, other than those arising from unsettled liens, from faulty work or materials appearing within one (1) year after payment or claims previously made and still unsettled.

If, after the work has been substantially completed, full completion thereof is materially delayed through no fault of the CONTRACTOR and the Engineer so certifies, the OWNER shall, upon certificate of the Engineer and without terminating the contract, make payment of the balance due for that portion of the work fully completed and accepted. Such payment shall be made under the terms and conditions governing final payment, except that it shall not constitute a waiver of claims.

ARTICLE VI

The Performance Bond

The CONTRACTOR agrees to furnish a bond with an approved surety thereon guaranteeing the performance of this contract in no less than one hundred percent (100%) of the amount of the contract. Said bond shall be conditioned on full and complete performance of the contract, and surety on said bond shall be a surety company of financial resources satisfactory to the OWNER and authorized to do business in the State of Mississippi.

ARTICLE VII

Insurance

The CONTRACTOR agrees to also carry public liability insurance, property damage insurance, and workman's compensation insurance in amounts as required by the specifications.

WITNESSETH: that for and in consideration of the payments and agreements hereinafter mentioned:

1. The CONTRACTOR will commence and complete the construction of **Mass Notification System #6, City of Hattiesburg, MS**.

2. The CONTRACTOR will furnish all of the material, supplies, tools, equipment, labor, and other services necessary for the construction and completion of the project described herein.

3. The CONTRACTOR will commence the work required by the "Contract Documents" within fifteen (15) calendar days unless the period for completion is extended otherwise by the "Contract Documents."

4. The CONTRACTOR agrees to perform all of the work described in the "Contract Documents" and comply with the terms therein for the sum of _____ (_____), or as shown in the bid schedule.

5. The term "Contract Documents" means and includes the following:

Advertisement for Bids	Notice of Award
Instructions to Bidders	Notice to Proceed
Bid	Change Order
Bid Bond	General Conditions
Contract Agreement	Supplemental General Conditions
Payment Bond	Technical Specifications
Performance Bond	Drawings

Addenda: No. ____. Dated: _____, 20__

No. ____. Dated: _____, 20__

No. ____. Dated: _____, 20__

No. ____. Dated: _____, 20__

No. ____. Dated: _____, 20__

No. ____. Dated: _____, 20__

No. ____. Dated: _____, 20__

6. The OWNER will pay to the CONTRACTOR in the manner and at such times as set forth in the "General Conditions" such amounts as required by the "Contract Documents."

7. This "Contract Agreement" shall be binding upon all parties hereto and their respective heirs, executors, administrators, successors, and assigns.

(Owner's Seal)

ATTEST by:

	CITY OF HATTIESBURG, MS
	OWNER
Name	**Name**
Title	**Title**

(Contractor's Seal)

ATTEST by:

	CONTRACTOR
Name	**Name**
Title	**Title**
	Address *(Please print)*
	City/State/Zip

PAYMENT BOND

KNOWN ALL MEN BY THESE PRESENTS: that

Contractor	Contractor's Address
a (Corporation, Partnership, Individual)	City/State/Zip

hereinafter called "**PRINCIPAL,**" and

SURETY	SURETY's Address
	City/State/Zip

hereinafter called '**SURETY,**" are held and firmly bound unto

The City of Hattiesburg	P.O. Box 1898
OWNER	OWNER's Address
	Hattiesburg, MS 39403-1898
	City/State/Zip

hereinafter called '**OWNER,**"

in the penal sum of _____ Dollars ($_____)
in lawful money of the United States for the payment of which sum well and truly to be made, we bind ourselves, successors, and assigns, jointly and severally, firmly by these presents.

THE CONDITION OF THIS OBLIGATION is such that whereas, the PRINCIPAL entered into a certain contract with the OWNER, dated the _____ day of _____, 2013, a copy of which is hereto attached and made a part hereof for the construction of:

_____

NOW, THEREFORE, if the PRINCIPAL shall promptly make payment to all persons, firms subcontractors, and corporations furnishing materials for or performing labor in the prosecution of the work provided in such contract, and any authorized extension or modification thereof, including all amounts due to materials, lubricants, oil, gasoline, coal and coke, repairs on machinery, equipment and tools, consumed or used in connection with the construction of such work, and all insurance premiums on said work, and for all labor performed in such work whether by subcontractor or otherwise, then this obligation shall be void, otherwise to remain in full force and effort.

PROVIDED FURTHER, that the said SURETY for value received hereby stipulates and agrees that no change, extension of time, alteration or addition to the terms of the contract or to the work to be performed thereunder or the specifications accompanying the same shall in any wise affect its obligation on this bond, and it does hereby waive notice of any such change, extension of time, alteration or addition to the terms of the contract or to the work or to the specifications.

PROVIDED FURTHER, that no final settlement between the OWNER and the PRINCIPAL shall abridge the right of any beneficiary hereunder whose claim may be unsatisfied.

IN WITNESS WHEREOF, this instrument is executed in _____ counterparts, each
(Number)

one of which shall be deemed an original. Said PRINCIPAL and SURETY have hereunto set their hands and seals at _____this the _____ day of _____, 20__.

(PRINCIPAL's Seal)

ATTEST by:

_____	_____ PRINCIPAL
_____ Name	_____ Authorized Representative Executing for PRINCIPAL
_____ (PRINCIPAL) Secretary; Witness as to PRINCIPAL	_____ Title
_____ Address	
_____ City/State/Zip	

(SURETY's Seal)

ATTEST by:

_____	_____
	SURETY
_____	_____
Name	Authorized Person Executing For SURETY
_____	_____
Title	Title
_____	
Witness as to SURETY	
_____	
Address	
_____	
City/State/Zip	

NOTE: Date of bond must not be prior to the date of the contract agreement. If PRINCIPAL is a partnership, all partners should execute the bond.

IMPORTANT NOTE: SURETY companies executing bonds must appear on the US Treasury Department's most current list (Circular C570, as amended) and be authorized to transact business in the state where the project is located.

PERFORMANCE BOND

KNOWN ALL MEN BY THESE PRESENTS: that

Contractor	Contractor's Address
a _____ (Corporation, Partnership, Individual)	City/State/Zip

hereinafter called "**PRINCIPAL**," and

SURETY	SURETY's Address
	City/State/Zip

hereinafter called '**SURETY**," are held and firmly bound unto

The City of Hattiesburg	P.O. Box 1898
OWNER	OWNER's Address
	Hattiesburg, MS 39403-1898
	City/State/Zip

hereinafter called '**OWNER**,"

in the penal sum of _____ Dollars ($_____)
in lawful money of the United States for the payment of which sum well and truly to be made, we bind ourselves, successors, and assigns, jointly and severally, firmly by these presents.

THE CONDITION OF THIS OBLIGATION is such that whereas, the PRINCIPAL entered into a certain contract with the OWNER, dated the _____ day of _____, 2013, a copy of which is hereto attached and made a part hereof for the construction of:

_____

NOW, THEREFORE, if the PRINCIPAL shall well, truly, and faithfully perform its duties, all the undertakings, covenants, terms, conditions, and agreements of said contract during the original term thereof, and any extensions thereof which may be granted by the OWNER, with or without notice to the SURETY, and during the one year guaranty period, and if PRINCIPAL shall satisfy all claims and demands incurred under such contract, and shall fully indemnify and save harmless the OWNER from all costs and damages that it may suffer by reason of failure to do so, and shall

reimburse and repay the OWNER all outlay and expense which the OWNER may incur in making good any default, then this obligation shall be void; otherwise to remain in full force and effect.

NOW THEREFORE, if the PRINCIPAL shall promptly make payment of all taxes, licenses, assignments, contributions, damages, penalties, and interest thereon, when and as the same may lawfully be due the State of Mississippi, or any county, municipality, board, department, commission, or political subdivision thereof, by reason of and directly connected with the performance of said contract or any part thereof as provided by Sections 27-65-1, 27-65-21, 27-67-1, 27-67-301, and 31-5-3, supra, or any other applicable statute or other authority, then this obligation shall be null and void; otherwise, it shall remain in full force and effect.

PROVIDED FURTHER, that the said SURETY, for value received hereby stipulates and agrees that no change, extension of time, alteration or addition to the terms of the contract or to work to be performed thereunder or the specifications accompanying the same shall in any wise affect its obligation on this bond, and it does hereby waive notice of any such change, extension of time, alteration or addition to the terms of the contract or to the work or to the specifications.

PROVIDED FURTHER, that no final settlement between the OWNER and the PRINCIPAL shall abridge the right of any beneficiary hereunder whose claim may be unsatisfied.

IN WITNESS WHEREOF, this instrument is executed in _____ counterparts, each
(Number)

one of which shall be deemed an original. Said PRINCIPAL and SURETY have hereunto set their hands and seals at _____this the _____ day of _____, 2013.

(PRINCIPAL's Seal)

ATTEST by:

_____	_____
	PRINCIPAL
_____	_____
Name	Authorized Person Executing for PRINCIPAL
_____	_____
(PRINCIPAL) Secretary; Witness as to PRINCIPAL	Title
_____	
Address	
_____	
City/State/Zip	

(SURETY's Seal)

ATTEST by:

_____	_____
	SURETY
_____	_____
Name	Authorized Person Executing For SURETY
_____	_____
Title	Title
_____	
Witness as to SURETY	
_____	
Address	
_____	
City/State/Zip	

NOTE: Date of bond must not be prior to the date of the contract agreement. If PRINCIPAL is a partnership, all partners should execute the bond.

IMPORTAN NOTE: *SURETY companies executing bonds must appear on the US Treasury Department's most current list (Circular C570, as amended) and be authorized to transact business in the state where the project is located.*

NOTICE of AWARD

TO:

Project Description: Mass Notification System #6
Hattiesburg MS

The owner has considered the bid submitted by you for the above described work in response to his/its "Advertisement for Bids" dated _____, and "Instructions to Bidders." You are hereby notified that your bid has been accepted for items in the amount of ($_____).

You are required by the "Instructions to Bidders" to execute the "Contract Agreement" and furnish the required contractor's "Payment and Performance Bond" and certificates of insurance within ten (10) calendar days from the date of this Notice to you. *(See "Contract Documents.")*

If you fail to execute said "Contract Agreement" and to furnish said bonds and certificates within ten (10) days from the date of this Notice, said owner will be entitled to consider all your rights arising out of the owner's acceptance of your bid as abandoned. The owner will be entitled to such other rights as may be granted by law.

You are required to return an acknowledged copy of this "Notice of Award" to the owner.

Dated this _____ day of _____, 20__.

CITY OF HATTIESBURG
OWNER

by: _____
Authorized Company Representative

_____
Title

ACCEPTANCE of NOTICE

Receipt of the above "Notice of Award" is acknowledged by: _____
Contractor Authorized Signee

This the _____ day of _____, 20__. _____
Print Name

_____
Title

NOTICE to PROCEED

TO:

Project Description: Mass Notification System #6
Hattiesburg MS

In accordance with the "Contract Agreement" dated , 20__.

1) You are hereby notified to **commence stated project work on or before** _____, **20__**.

2) You are to complete the stated project work within __60__ consecutive calendar days thereafter.

3) The date of completion of all stated project work is therefore _____, **20__**.

Dated this _____ day of _____, 20____.

CITY OF HATTIESBURG
OWNER

by: _____
Authorized Company Representative

_____
Title

ACCEPTANCE of NOTICE

Receipt of the above "Notice to Proceed" is acknowledged by: _____
Contractor Authorized Signee

This the _____ day of _____, 20____. _____
Print Name

_____
Title

ARTICLE 1

DEFINITIONS

Wherever used in these "General Conditions" or in the other contract documents, the following terms shall have the meanings indicated, which shall be applicable to both the singular and plural thereof:

Acceptance: Acceptance by the owner of the work as being fully complete in accordance with the contract documents.

Agreement: The written agreement between the owner and the contractor covering the work to be performed; the contract documents, which are attached to and made a part of the agreement, also designated as the contract.

Addenda: Written or graphic instruments issued prior to the execution of the agreement, which modify and/or interpret any or all part thereof of the contract documents, drawings and specifications by addition, deletions, clarifications, and/or corrections.

Application for Payment: The form furnished by the engineer, which is to be used by the contractor in requesting progress payments. The "Application for Payment" form is submitted along with an affidavit by the contractor that progress payments theretofore received from the owner on account for completed work have been applied by the contractor to discharge in full all of the contractor's obligations stated in prior "Application(s) for Payment."

Approval: Accepts as satisfactory.

Bid: The offer or proposal of the bidder submitted on the prescribed form setting forth the prices for the work to be performed.

Bidder: Any person, firm, or corporation submitting a bid for the work.

Bonds: Bid, performance, and payment bonds and other instruments of security furnished by the contractor and contractor's surety in accordance with the contract documents and in accordance with the law of the place/location of the project.

Change Order: A written order to the contractor signed by the owner authorizing an addition to, deletion of, or revision in the work, or an adjustment in the contract price or the contract time issued after execution of the agreement.

Contract Documents: "Advertisement for Bids; Instructions for Bidders; Contractor's Bid; Bid Bond; Contract Agreement; General Conditions; Supplemental General Conditions; Technical Specifications; Payment Bond; Performance Bond; Notice of Award; Notice to Proceed; Change Order, and Drawings."

Contract Price: The total moneys payable to the contractor under the contract documents.

Contract Time: The number of calendar days stated in the agreement for the completion of the work.

Contracting Officer: The individual who is authorized to sign the contract documents on behalf of the owner's governing body. The contracting officer is also known as the "Owner's Recipient."

Contractor: The person, firm, or corporation with whom/which the owner has executed the agreement.

Day: A calendar day of twenty-four hours measured from midnight to the next midnight.

Drawings: The drawings that show the character and scope of the work to be performed that have been prepared or approved by the engineer and are referred to in the contract documents.

Engineer: The person, firm, or corporation named as such in the contract documents.

Field Order: A written order issued by the engineer which clarifies or interprets the contract documents in accordance with herein **Article 9**, paragraph 9.3 or orders minor changes in the work in accordance with herein **Article 10**, paragraph 10.2.

He, His, and Him: These are general pronouns that shall represent both male and female genders.

Modification: (a) A written amendment of the contract documents signed by both parties, (b) a change order, (c) a written clarification or interpretation issued by the engineer in accordance with herein **Article 9**, paragraph 9.3, or (d) a written order for a minor change or alteration in the work issued by the engineer pursuant to herein **Article 10**, paragraph 10.2. A modification may only be issued after execution of the agreement.

Notice of Award: The written notice by owner to the apparent successful bidder stating that upon compliance with the conditions precedent to be fulfilled by the bidder within the time specified, owner will execute and deliver the agreement to him.

Notice to Proceed: A written notice given by owner to contractor (with a copy to engineer) fixing the date on which the contract time will commence to run and on which the contractor shall start to perform said contractor's obligations under the contract documents.

Owner: A public body or authority, corporation, association, partnership, or individual for which/whom the work is to be performed.

Project: The entire construction to be performed as provided in the contract documents.

Resident Project Representative: An authorized representative of the engineer assigned to observe the work performed and materials furnished by the contractor or such other person as may be appointed by the owner as his representative. The contractor shall be notified in writing of the identity of this representative.

Shop Drawings: All drawings, diagrams, illustrations, brochures, schedules, and other data that are prepared by the contractor, a subcontractor, manufacturer, supplier, or distributor and which illustrate the equipment, material, or some portion of the work and as required by the contract documents.

Samples: Physical examples which illustrate materials, equipment, or workmanship and establish standards by which the work will be judged.

Specifications: Those portions of the contract documents consisting of written technical descriptions of materials, equipment, construction systems, standards, and workmanship as applied to the work.

Subcontractor: An individual, firm or corporation having a direct contract with contractor or with any other subcontractor for the performance of a part of the work at the site.

Substantial Completion: Substantial completion may be granted for all or portions of the work prior to final completion and stopping of contract time. Substantial completion is defined as the date when the construction is sufficiently completed in accordance with the contract documents so that the project or specified part of the project can be utilized for the purpose for which it was intended. The contract provides that the retainer may be reduced for that portion of the work for which substantial completion is granted, but the granting of substantial completion will not stop contract time or liquidated damages.

Supplemental General Conditions: Certain conditions of this contract required by the State of Mississippi, Department of Environmental Quality and by federal laws, executive orders, and regulations on projects funded by the state revolving fund loan program.

Supplier: An individual who and/or firm, corporation, or other organization that supplies materials or equipment for the work - including that which is fabricated to a special design, but does not perform labor at the site.

Special Conditions: Special conditions refer only to the work under this contract when included as a part of the contract documents.

Surety: The corporate body which is bound with the contractor and which engages to be responsible for the contractor and his acceptable performance of the work.

Work: Any and all obligations, duties, and responsibilities necessary to the successful completion of the project assigned to or undertaken by contractor under the contract documents, including all labor, materials, equipment and other incidentals, and the furnishing thereof.

Written Notice: The term "Notice" or "notice" as used herein shall mean and include all written notices, demands, instructions, claims, approvals, and disapprovals required to obtain compliance with contract requirements. Written "Notice" shall be deemed to have been duly served if delivered in person to the individual or to a member of the firm or to an officer of the corporation for whom it is intended, or to an authorized representative of such individual, firm or corporation, or if delivered at or sent by registered mail to the last business address known to him who gives the "Notice." Unless otherwise stated in writing, any "Notice" to or demand upon the owner under this contract shall be delivered to the owner through the engineer.

ARTICLE 2

PRELIMINARY MATTERS

2.1 Award

The award of the contract, if it is awarded, will be to the lowest responsive, responsible bidder. No "Notice of Award" will be given until the owner has concluded such investigations as he deems necessary to establish the responsibility, qualifications, and financial ability of the bidders to do the work in accordance with the contract documents to the satisfaction of the owner within the time prescribed. The owner reserves the right to reject the bid of any bidder who does not pass such investigation to the owner's satisfaction. In analyzing bids, the owner may take into consideration alternates and unit prices, if requested by the bid forms. If the contract is awarded, the owner will issue the "Notice of Award" and give the successful bidder a contract for execution within sixty (60) days after the opening of bids.

2.2 Execution of Agreement

At least three counterparts of the agreement and such other contract documents will be executed and delivered by the contractor to the owner within ten (10) calendar days of receipt from the owner.

2.3 Forfeiture of Bid Security

Failure of the successful bidder to execute and deliver the agreement and deliver the required bonds as stipulated herein in **Article 2,** paragraph 2.2 shall be just cause for the owner to annul the "Notice of Award" and declare the bid and any security therefore forfeited.

2.4 Contractor's Pre-Start Representations

Contractor represents that he has familiarized himself with, and assumes full responsibility for having familiarized himself with, the nature and extent of the contract documents, work, locality, and with all local conditions and federal, state, and local laws, ordinances, rules, and regulations that may in any manner affect performance of the

work, and represents that he has correlated his study and observations with the requirements of the contract documents. Contractor also represents that he has studied all surveys and investigation reports of subsurface and latent physical conditions referred to in the specifications and made such additional surveys and investigations as he deems necessary for the performance of the work at the contract price in accordance with the requirements of the contract documents and that he has correlated the results of all such data with the requirements of the contract documents.

2.5 Commencement of Contract Time
The contract time will commence to run no more than fifteen (15) days after issuance of the "Notice to Proceed."

2.6 Starting the Project
Contractor shall start to perform his obligations under the contract documents on the date when the contract time commences to run. No work shall be done at the site prior to the date on which the contract time commences to run, except with the written consent of the owner.

2.7 Before Starting Construction
Before undertaking each part of the work, the contractor shall carefully study and compare the contract documents and check and verify pertinent figures shown thereon and all applicable field measurements. The contractor shall at once report in writing to the engineer any conflict, error or discrepancy which he may discover; however, the contractor shall not be liable to the owner or engineer for contractor's failure to discover any conflict, error, or discrepancy in the drawings or specifications.

2.8 Schedule of Completion
Within ten (10) days after delivery of the "Notice to Proceed" by the owner to the contractor, the contractor shall submit to the engineer an estimated progress schedule with earnings indicating the starting and completion dates of the various stages of the work and a preliminary schedule of shop drawing submissions. (See herein **Article 6**, paragraphs 6.22 through 6.26.) The engineer shall review and return said progress schedule or require revisions thereto within fourteen (14) days of its submittal. The responsibility for coordinating the work of all contractors shall be as provided in the special conditions if there is more than one contractor involved in a project.

2.9 Preconstruction Conference
Prior to starting the work at the site, a preconstruction conference will be held to review the above mentioned schedules to establish procedures for handling shop drawings and other submissions, for processing applications for payment, and to establish a working understanding between the parties as to the project. Present at the conference will be the owner or owner's representative, the engineer, resident project representatives, contractor, and contractor's superintendent.

2.10 Qualification of Subcontractors, Material-Men, and Suppliers
Within ten (10) working days after bid opening, the contractor will (if required) submit to the owner and the engineer for acceptance a list of the names of subcontractors and such other persons and organizations (including those who are to furnish principal items of materials or equipment) proposed for those portions of the work to which the identity of the subcontractors and other persons and organizations must be submitted as specified in the contract documents.

Within thirty (30) working days after receiving said list, the engineer will notify the contractor in writing if either the owner or the engineer, after due investigation, has reasonable objection to any subcontractor, person, or organization on said list. The failure of the owner or the engineer to make objection to any subcontractor, person, or organization on said list within thirty (30) days of receipt shall constitute an acceptance of such subcontractor, person, or organization. Acceptance of any such subcontractor, person, or organization shall not constitute a waiver of any right of the owner or the engineer to reject defective work, material, or equipment, or any work, material, or equipment not in conformance with the requirements of the contract documents.

ARTICLE 3

CORRELATION, INTERPRETATION and INTENT of CONTRACT DOCUMENTS

3.1 Intent

It is the intent of the specifications and drawings to describe a complete project to be constructed in accordance with the contract documents. The contract documents comprise the entire agreement between the owner and the contractor. The contract documents may be altered only by a modification.

3.2 Binding of Contract Documents

The contract documents are complementary; what is called for by one is as binding as if called for by all. If the contractor finds a conflict, error, or discrepancy in the contract documents, contractor shall call it to the engineer's attention in writing at once and before proceeding with the work affected thereby; however, contractor shall not be liable to owner or engineer for contractor's failure to discover any conflict, error, or discrepancy in the specifications or drawings. The various contract documents shall be given precedence, in case of conflict, error, or discrepancy, as follows: supplemental general conditions; agreement modifications; addenda; special conditions; information to bidders; general conditions; technical specifications, and drawings. If the requirements of other contract documents are more stringent than of the supplemental general conditions, the more stringent requirements shall apply.

3.3 Similar Words Interpretation

The words "furnish," Arequired,@ "furnish and install," "install," and "provide" or words with similar meaning shall be interpreted, unless otherwise specifically stated, to mean "furnish and install-- complete in place and ready for service."

3.4 Miscellaneous Items and Accessories

Miscellaneous items and accessories that are not specifically mentioned that are essential to produce a complete and properly operating installation or usable structure or plant providing the indicated function shall be furnished and installed without change in the contract price. Such miscellaneous items and accessories shall be of the same quality standards, including material, style, finish, strength, class, weight, and other applicable characteristics as specified for the major component of which the miscellaneous item or accessory is an essential part and shall be approved by the engineer before installation. The above requirement is not intended to include major components not covered by or inferable from the drawings and specifications.

3.5 Coordination of Work

The work of all trades under this contract shall be coordinated by the contractor in such a manner as to obtain the best workmanship possible for the entire project, and all components of the work shall be installed or erected in accordance with the best practices of the particular trade.

3.6 Manufacturer's Literature and Agency/Organization Codes

Manufacturer's literature, when referenced, shall be dated and numbered and is intended to establish the minimum requirements acceptable. Whenever reference is given to codes, standard specifications, or other data published by regulating agencies or accepted organizations, including but not limited to, national electrical code, applicable state building code, federal specifications, ASTM Specifications, various institute specifications, and the like, it shall be understood that such reference is to the latest edition including addenda in effect on the date of bid.

3.7 Brand Names

Brand names, where used in the technical specifications, are intended to denote the standard of quality required for the particular material or product. The term "equal" or "equivalent" when used in connection with brand names shall be interpreted to mean a material or product that is similar and equal in type, quality, size, capacity, composition, finish, color, and other applicable characteristics to the material or product specified by trade name and that is suitable for the same use and capable of performing the same function in the opinion of the engineer as the material or product so specified. It shall be understood by all bidders that "or equal" products may be used for all brands specified unless specifically noted otherwise. Proposed equivalent items must be approved by the engineer before

they are purchased or incorporated in the work. (When a brand name, catalog number, model number, or other identification is used without the phrase "or equal," the contractor shall assume the phrase "or equal.")

ARTICLE 4

AVAILABILITY OF LANDS; SUBSURFACE CONDITIONS; REFERENCE POINTS

4.1 Availability of Lands

The owner will furnish, as indicated in the contract documents, the lands upon which the work is to be done, rights-of-way for access thereto, and such other lands which are designated for the use of the contractor. Easements for permanent structures or permanent changes in existing facilities will be obtained and paid for by the owner unless otherwise specified in the contract documents. Other access to such lands or rights-of-way for the contractor's convenience shall be the responsibility of the contractor. The contractor will provide for all additional lands and access thereto that may be required for temporary construction facilities or storage of materials and equipment.

4.2 Surveys and Test

The owner will, upon request, furnish to the bidder(s) copies of all available boundary surveys and subsurface tests at no cost.

4.3 Subsurface Conditions

The contractor acknowledges that he has investigated conditions prior to bidding and is satisfied with said conditions affecting the work, including but not restricted to those bearing upon transportation, disposal, handling and storage of materials, availability of labor, water, electric power, roads, and uncertainties of weather, river stages, tides, water tables or similar physical conditions at the site, the conformation and conditions of the ground, and the character of equipment and facilities needed preliminary to and during prosecution of the work. The contractor further acknowledges that he has satisfied himself as to the character, quality, and quantity of surface and subsurface materials or obstacles to be encountered insofar as this information is reasonably ascertainable from an inspection of the site, including all exploratory work done on behalf of the owner on the site or any contiguous site, as well as from information presented by the drawings and specifications made a part of this contract, or any other information made available to said contractor prior to receipt of bids. Any failure by the contractor to acquaint himself with the available information will not relieve said contractor from responsibility for estimating properly the difficulty or cost of successfully performing the work. The owner assumes no responsibility for any conclusions or interpretations made by the contractor on the basis of the information made available by the owner.

4.4 Differing Site Conditions

4.4.1 The contractor shall promptly, and before such conditions are disturbed, notify the owner in writing of: (1) subsurface or latent physical conditions at the site differing materially from those indicated in this contract, or (2) unknown physical conditions at the site and/or of an unusual nature, differing materially from those ordinarily encountered and generally recognized as inherent in work of the character provided for in this contract. The owner shall promptly investigate the conditions, and if he finds that such conditions do materially so differ and cause an increase or decrease in the contractor's cost of, or the time required for, performance of any part of the work under this contract, whether or not changed as a result of such conditions, an equitable adjustment shall be made and the contract modified in writing accordingly.

4.4.2 No claim of the contractor under this clause shall be allowed unless the contractor has given the notice required in (a) above; provided, however, the time prescribed thereof may be extended by the owner.

4.4.3 No claim by the contractor for an equitable adjustment hereunder shall be allowed if asserted after final payment under this contract.

ARTICLE 5

BONDS AND INSURANCE

5.1 Performance and Payment Bonds
The contractor's attention is directed to the instructions for bidders, the performance bond, and the payment bond as contained in the contract documents.

5.2 Contractor's Liability Insurance
The contractor shall provide the owner with insurance certificates certifying that all required liability insurance is in force, and such insurance certificates shall include provisions that the insurance shall not be canceled, allowed to expire, or be materially changed without giving the owner advance notice by registered mail.

5.3 Sublet Work
The contractor agrees that if any part of the work under the contract is sublet, he will require the subcontractor(s) to carry insurance as required, and that the contractor will require the subcontractor(s) to furnish to contractor insurance certificates similar to those required by the owner in above listed paragraph 5.2 (a).

5.4 Owner's Liability Insurance
The owner will be responsible for purchasing and maintaining owner's own liability insurance and, at his option, may purchase and maintain such insurance as will protect him against claims which may arise from operations under the contract documents.

5.5 Fire and Extended Coverage Insurance (Builders' Risk)
The contractor shall maintain, as applicable, with an insurance company or insurance companies acceptable to the owner, fire, extended coverage, and vandalism and malicious mischief insurance on buildings and structures while in the course of construction including foundations, additions, attachments and all permanent fixtures belonging to and constituting a part of said buildings or structures. The policy or policies shall also cover machinery if the cost of machinery is included in the contract. The amount of insurance must be at all times at least equal to the actual cash value of the insured property. The policy shall be in the name of the owner and the contractor, as their interests may appear, and shall also cover the interests of all subcontractors performing work.

5.6 Flood Insurance
The contractor shall maintain, as applicable, with an insurance company or insurance companies acceptable to the owner, any flood insurance made available under the US National Flood Insurance Act of 1968, as amended. This requirement applies only to insurable improvements with a value in excess of ten thousand dollars ($10,000.00 USD) located inside the boundaries of a special flood hazard area delineated on a flood hazard boundary map or flood insurance rate map which has been issued by the Department of Housing and Urban Development and the Federal Insurance Administration. The insurance shall be in an amount at least equal to the total eligible project costs located within the flood hazard area, or to the maximum limit of coverage made available under the National Flood Insurance Act of 1968, as amended, whichever is less, for the entire life of the contract.

5.7 Evidence of Insurance
The contractor shall provide the owner with satisfactory evidence certifying that the foregoing insurance is in force, and such evidence shall include provisions that the insurance shall not be canceled, allowed to expire, or be materially changed without giving the owner advance notice by registered mail.

5.8 Cancellation and Re-Insurance
If any insurance should be canceled or changed by the insurance company or should any insurance expire during the period of this contract, the contractor shall be responsible for securing other acceptable insurance to provide the coverage specified in this section to maintain continuous coverage during the life of this contract.

ARTICLE 6

CONTRACTOR'S RESPONSIBILITIES

6.1 Supervision and Superintendence

The contractor will supervise and direct the work. The contractor will be solely responsible for the means, methods, techniques, sequences, and procedures of construction. The contractor will employ and maintain on the work a qualified supervisor or superintendent who shall have been designated in writing by the contractor as the contractor's representative at the site. The supervisor shall have full authority to act on behalf of the contractor, and all communications given to the supervisor shall be as binding as if given to the contractor. The supervisor shall be present on the site at all times as required to perform adequate supervision and coordination of the work. (Copies of written communications given to the superintendent shall be mailed to the contractor's home office).

6.2 Labor, Materials, and Equipment

The contractor will provide competent, suitable, qualified personnel to survey and lay-out the work and perform construction as required by the contract documents. Contractor will at all times maintain good discipline and order at the site.

6.3 Contractor to Furnish

The contractor will furnish all materials, equipment, labor, transportation, construction equipment and machinery, tools, appliances, fuel, power, light, heat, local telephone, water, sanitary facilities and all other facilities and incidentals necessary for the execution, testing, initial operation, and completion of the work.

6.4 Condition of Materials and Equipment

All materials and equipment will be new except as otherwise provided in the contract documents. When special makes or grades of material which are normally packaged by the supplier or manufacturer are specified or approved, such materials shall be delivered to the site in their original packages or container with seals unbroken and labels intact.

6.5 Materials and Equipment Specifications

All materials and equipment shall be applied, installed, connected, erected, used, cleaned, and conditioned in accordance with the instructions of the applicable manufacturer, fabricator, or processors, except as otherwise provided in the contract documents.

6.6 Materials, Equipment, Products, and Substitutions

6.6.1 Materials, equipment, and products incorporated in the work must be approved for use before being purchased by the contractor. The contractor shall submit to the engineer a list of proposed materials, equipment, or products, together with such samples as may be necessary for contractor to determine said materials, equipment or products acceptability and obtain engineer's approval within ninety (90) calendar days after award of contract unless otherwise stipulated in the special conditions. No request for payment for "or equal" equipment will be approved until this list has been received and approved by the engineer.

6.6.2 Whenever a material, article, or piece of equipment is identified on the drawings or specifications by reference to brand name or catalogue number, it shall be understood that this is referenced for the purpose of defining the performance of other salient requirements and that other products of equal capacities, quality, and function shall be considered. The contractor may recommend the substitution of a material, article, or piece of equipment of equal substance and function for those referred to in the contract documents by reference to brand name or catalogue number, and if, in the opinion of the engineer, such material, article, or piece of equipment is of equal substance and function to that specified, the engineer may approve its substitution and use by the contractor. Incidental changes or extra component parts required to accommodate the substitute will be made by the contractor without a change in the contract price or contract time.

6.6.3 No substitute shall be ordered or installed without the written approval of the engineer, who shall be the judge of equality.

6.6.4 Delay caused by obtaining approvals for substitute materials will not be considered justifiable grounds for an extension of construction time.

6.6.5 Should any work or materials, equipment, or products not conform to requirements of the drawings and specifications or become damaged during the progress of the work, such work or materials shall be removed and replaced together with any work disarranged by such alterations at any time before completion and acceptance of the project. All such work shall be done at the expense of the contractor. (See herein **Article 7**, paragraph 7.10.)

6.6.6 No materials or supplies for the work shall be purchased by the contractor or by a subcontractor subject to any chattel mortgage or under a conditional sale or other agreement by which an interest is retained by the seller. The contractor warrants that he has good title to all materials and supplies used by him in the work.

6.7 Concerning Subcontractors

The contractor will not employ any subcontractor, other person, or organization of the types referred to in herein **Article 2**, paragraph 2.10 (whether initially or as a substitute) against whom the owner or the engineer may have reasonable objection, nor will the contractor be required to employ any subcontractor against whom contractor has reasonable objection. The contractor will not make any substitution for any subcontractor who has been accepted by the owner and the engineer unless the engineer determines there is good cause for doing so.

6.8 Contractor's Responsibility for (Direct and Indirect) Personnel

The contractor shall be fully responsible for all acts and omissions of his subcontractors and of persons and organizations directly or indirectly employed by them and of persons and organizations for whose acts any of them may be liable to the same extent that contractor is responsible for the acts and omissions of persons directly employed by him. Nothing in the contract documents shall create any contractual relationship between owner or engineer and any subcontractor or other person or organization having a direct contract with contractor, nor shall it create any obligation on the part of owner or engineer to pay or to see to the payment of any moneys due any subcontractor or other person or organization, except as may otherwise be required by law. Owner or engineer may furnish to any subcontractor or other person or organization, to the extent practicable, evidence of amounts paid to contractor on account of specific work done in accordance with the schedule of values.

6.9 Drawings Disassociation of Work Delegation

The divisions and sections of the specifications and the identifications of any drawings shall not control the contractor in dividing the work among subcontractors or delineating the work to be performed by any specific trade.

6.10 Binding Subcontractors to Contract

The contractor agrees to bind specifically every subcontractor to the applicable terms and conditions of the contract documents for the benefit of the owner.

6.11 Contractor and Subcontractor Agreement

All work performed for the contractor by a subcontractor shall be pursuant to an appropriate agreement between the contractor and the subcontractor.

6.12 Contractor's Responsibility When Delegating Work

6.12.1 The contractor shall be responsible for the coordination of the trades, subcontractors, and material-men engaged upon contractor's work.

6.12.2 The contractor shall cause appropriate provisions to be inserted in all subcontracts relative to the work to bind subcontractors to the contractor by the terms of these general conditions and other contract documents

insofar as applicable to the work of subcontractors and to give the contractor the same power as regards to terminating any subcontract that the owner may exercise over the contractor under any provisions of the contract documents.

6.12.3 The owner or engineer will not undertake to settle any differences between the contractor and his subcontractors or between subcontractors.

6.12.4 The subcontractor shall be replaced if and when directed in writing if, in the opinion of the engineer, any subcontractor on the project proves to be incompetent or otherwise unsatisfactory.

6.13 Patent Fees and Royalties

The contractor will pay all license fees and royalties and assume all costs incident to the use of any invention, design, process, or device that is the subject of patent rights or copyrights held by others. He will indemnify and hold harmless the owner and the engineer and anyone directly or indirectly employed by either of them from and against all claims, damages, losses, and expenses (including attorney's fees) arising out of any infringement of such rights during or after completion of the work, and shall defend all such claims in connection with any alleged infringement of such rights.

6.14 Patent Rights and Royalties

The contractor shall be responsible for determining the application of patent rights and royalties on materials, appliances, articles, and/or systems prior to bidding. However, he shall not be responsible for such determination on systems that do not involve purchase by him of materials, appliances, and articles.

6.15 Permits

The contractor will secure and pay for all construction permits and licenses and will pay all governmental charges and inspection fees necessary that are applicable at the time of his bid for the prosecution of the work. There will be no charges to the contractor when such charges are normally made by the owner and when so stated in the special conditions. The owner shall assist the contractor, when necessary, in obtaining such permits and licenses. The contractor will also pay all public utility charges.

6.16 Laws and Regulations

The contractor will give all notices and comply with all laws, ordinances, rules, and regulations applicable to the work. If the contractor observes that the specifications or drawings are at variance therewith, he will give the engineer prompt written notice thereof, and any necessary changes shall be adjusted by an appropriate modification. If the contractor performs any work knowing it to be contrary to such laws, ordinances, rules, and regulations, and without such notice to the engineer, he will bear all costs arising therefrom; however, it shall not be his primary responsibility to make certain that the drawings and specifications are in accordance with such laws, ordinances, rules, and regulations.

6.17 Taxes

Cost of all sales and other taxes for which the contractor is liable under the terms of the contract shall be included in the contract price stated by the contractor.

6.18 Record Drawings

The contractor will keep one record copy of all specifications, drawings, addenda, modifications, and shop drawings at the site in good order and annotated to show all changes made during the construction process. These complete drawings shall be available to the engineer and shall be delivered to him for the owner upon completion of the project. It shall be used for this purpose only.

6.19 Safety and Protection

The contractor will be responsible for initiating, maintaining, and supervising all safety precautions and programs in connection with the work. The contractor will take all necessary precautions for the safety of, and will provide the necessary protection to prevent damage, injury, or loss to

6.19.1 all employees on the work job and other persons who may be affected thereby;

6.19.2 all the work and all materials or equipment to be incorporated therein, whether in storage on or off the site, and

6.19.3 other property at the site or adjacent thereto, including trees, shrubs, lawns, walks, pavements, roadways, structures, and utilities not designated for removal, relocation, or replacement in the course of construction.

6.20 Preventative Measures

The contractor will designate a responsible member of his organization at the site whose duty shall be the prevention of accidents. This person shall be the contractor's superintendent unless otherwise designated in writing by the contractor to the owner.

6.21 Emergencies

In emergencies affecting the safety of persons or the work or property at the site or adjacent thereto, the contractor, without special instruction or authorization from the engineer or owner, is obligated to act at his discretion to prevent threatened damage, injury, or loss. He will give the engineer prompt written notice of any significant changes in the work or deviations from the contract documents caused thereby, and a change order shall thereupon be issued covering the changes and deviations involved. If the contractor believes that additional work done by him in an emergency which arose from causes beyond his control entitles him to an increase in the contract price or an extension of the contract time, he may make a claim therefore as provided herein in **Articles 11** and **12**.

6.22 Shop Drawings and Samples

After checking and verifying all field measurements, the contractor will submit to the engineer for review copies (or at the engineer's option, one reproducible copy) of all shop drawings in accordance with the accepted schedule of shop drawing submissions (see herein **Article 2**, paragraph 2.8), which shall have been checked by and stamped with the approval of the contractor. The data shown on the shop drawings will be complete with respect to dimensions, design criteria, materials of construction and the like to enable the engineer to review the information as required.

6.23 Submittal of Samples

The contractor will also submit to the engineer for review, with such promptness as to cause no delay in work, all samples required by the contract documents. All samples will have been checked by and stamped with the approval of the contractor, identified clearly as to material, manufacturer and pertinent catalog numbers, and the use for which intended.

6.24 Drawing or Sample Deviations from Contract

At the time of each submission, the contractor will, in writing, bring to the engineer's attention any deviations that the shop drawings or sample may have from the requirements of the contract documents.

6.25 Engineer's Review of Submitted Drawings and Samples

The engineer will review with reasonable promptness shop drawings and samples, but his review shall be only for conformance with the design concept of the project and for compliance with the information given in the contract documents. The review of a separate item as such will not indicate review of the assembly in which the item functions. The contractor will make any corrections required by the engineer and will return the required number of corrected copies of shop drawings and resubmit new samples until the review is satisfactory to the engineer. The contractor shall direct specific attention in writing or on resubmitted shop drawings to revisions other than the corrections called for by the engineer on previous submissions. The contractor's stamp of approval on any shop drawing or sample shall constitute a representation to the owner and the engineer that the contractor has either determined and verified all quantities, dimensions, field construction criteria, materials, catalogue numbers and

similar data, or he assumes full responsibility for doing so and that he has reviewed or coordinated each shop drawing or sample with the requirements of the work and the contract documents.

6.26 Commencement of Work of Submission(s)
No work requiring a shop drawing or sample submission shall be commenced until the submission has been reviewed and approved by the engineer. A copy of each shop drawing and each approved sample shall be kept in good order by the contractor at the site and shall be available to the engineer.

6.27 Contractor's Responsibility of Submission(s)
The engineer's review of shop drawings or samples shall neither relieve the contractor from his responsibility for any deviations from the requirements of the contract documents unless the contractor has, in writing, called the engineer's attention to such deviation at the time of submission and the engineer has given written approval to the specific deviation, nor shall any review by the engineer relieve the contractor from responsibility for errors or omissions in the shop drawings.

6.28 Site Clean-Up
The contractor shall clean up behind the work as much as is reasonably possible as the work progresses. Upon completion of the work, and before acceptance of and final payment for the project by the owner, the contractor shall remove all his surplus and discarded materials, excavated material, and rubbish from the roadways, sidewalks, parking areas, lawns, and all adjacent property; shall clean his portion of work involved in any building under this contract so that no further cleaning by the owner is necessary prior to his occupancy; shall restore all property, both public and private, that has been disturbed or damaged during the prosecution of the work, and shall leave the whole in a neat and presentable condition.

6.29 Building Clean-Up
Clean-up operations shall consistently be carried on by the contractor at all times to keep the premises free from accumulation of waste materials and rubbish. Upon completion of the work he shall remove all rubbish, tools, scaffolding, surplus materials, etc., from the building and shall leave his work "broom clean," or its equivalent, unless more exactly specified elsewhere in the contract. The general contractor shall do the following special cleaning for all trades upon completion of the work:

6.29.1 remove putty stains and paint from and wash and polish all glass. Do not scratch or otherwise damage glass.

6.29.2 remove all marks, stains, fingerprints and other soil and dirt from painted, stained, and decorated work.

6.29.3 remove all temporary protections and clean and polish floors.

6.29.4 clean and polish all hardware for all trades; this shall include removal of all stains, dust, dirt, paint, etc.

6.30 General Clean-Up
In case of dispute, the owner may remove the rubbish and charge the cost to the several contractors as the engineer shall determine to be just.

6.31 Public Convenience and Safety
The contractor shall, at all times, conduct the work in such a manner as to insure the least practicable obstruction to public travel. The convenience of the general public and of the residents along and adjacent to the area of the work shall be provided for in a satisfactory manner consistent with the operation and local conditions. "Street Closed" signs shall be placed immediately adjacent to the work in a conspicuous position at such locations as traffic demands. At any time that streets are required to be closed, the contractor shall notify law enforcement agencies, fire departments, and parties operating emergency vehicles before the street is closed and again as soon as it is opened. Access to fire hydrants and other fire extinguishing equipment shall be provided and maintained at all times.

6.32 Sanitary Provisions
The general contractor shall furnish necessary toilet conveniences secluded from public observation for use of all personnel on the work site, whether or not in his employ. They shall be kept in a clean and sanitary condition and shall comply with the requirements and regulations of the public authorities having jurisdiction. The general contractor shall commit no public nuisance. Temporary sanitary facilities shall be removed upon completion of the work and the premises shall be left clean.

6.33 Indemnification
The contractor will indemnify and hold harmless the owner and the engineer and their agents and employees from and against all claims, damages, losses and expenses including attorney's fees arising out of or resulting from the performance of work, provided that any such claim, damage, loss or expense is (a) attributable to bodily injury, sickness, disease or death, or to injury to or destruction of tangible property (other than work itself) including the loss of use resulting therefrom, and (b) caused in whole or in part by any negligent act or omission of the contractor, any subcontractor, anyone directly or indirectly employed by any of them or anyone for whose acts any of them may be liable, regardless of whether or not it is caused in part by a party indemnified hereunder.

6.34 Claims Against Owner or Engineer
In any and all claims against the owner or the engineer or any of their agents or employees, by an employee of the contractor, any subcontractor, anyone directly or indirectly employed by any of them or anyone for whose acts any of them may be liable, the indemnification obligation under herein **Article 6**, paragraph 6.33 shall not be limited in any way by any limitation on the amount or type of damages, compensation or benefits payable by or for the contractor or any subcontractor under workmen's compensation acts, disability benefit acts, or other employees benefit acts.

6.35 Contractor's Liability Obligations
The obligations of the contractor under herein **Article 6**, paragraph 6.34 shall not extend to the liability of the engineer's negligent acts, errors, or omissions or those of his employees or agents.

6.36 Responsibility for Connecting to Existing Work
It shall be the express responsibility of the contractor to connect his work to each part of the existing work or work previously installed as required by the drawings and specifications to provide a complete installation.

6.37 Work in Street, Highway, and Other Rights-of-Way
Excavation, grading, fill, storm drainage, paving, and any other construction or installations in rights-of-way of streets, highways, public carrier lines, utility lines (either aerial, surface or subsurface), etc., shall be done in accordance with requirements of federal, state, and local laws. The owner will be responsible for obtaining all permits necessary for the work. Upon completion of the work, contractor shall present to engineer certificates, in triplicate, from the proper authorities stating that the work has been done in accordance with their requirements.

6.37.1 The owner will cooperate with the contractor in obtaining action from any utilities or public authorities involved in the above requirements.

6.37.2 The engineer shall be responsible for obtaining elevations of curbs and gutters, pavements, storm drainage structures, and other such items as soon as grading operations are begun on the site and, in any case, sufficiently early in the construction period to prevent any adverse effect on the project.

6.37.3 Any variation from the requirements of paragraph 6.37.2 above shall be stated in the "Special Conditions."

6.38 Cooperation with Governmental Departments, Public Utilities, Etc.
The contractor shall be responsible for making all necessary arrangements with governmental departments, public utilities, public carriers, service companies, and corporations owning or controlling roadways, railways, water, sewer,

gas, electrical, telephone, and telegraph facilities such as pavements, tracks, piping, wires, cables, conduits, poles, guys, etc., including incidental structures connected therewith that are encountered in the work so that such items may be properly shored, supported, and protected, or the contractor may relocate them if he so desires. The contractor shall give all proper notices, shall comply with requirements of such parties in the performance of his work, shall permit entrance of such parties on the project in order that they may perform their necessary work, and shall pay all charges and fees made by such parties for this work.

6.38.1 The contractor's attention is called to the fact that there may be delays on the project due to work to be done by governmental departments, public utilities, and others in repairing or moving poles, conduits, etc. The contractor shall cooperate with the above parties in every way possible so that the construction can be completed in the least possible time.

6.38.2 The contractor shall have made himself familiar with all codes, laws, ordinances, and regulations that in any manner affect those engaged or employed in the work, or materials and equipment used in or upon the work, or in any way affect the conduct of the work, and no plea of misunderstanding will be considered on account of his ignorance thereof.

6.39 Use of Premises

The contractor shall confine his apparatus, storage of materials, and operations of his workmen to limits indicated by law, ordinances, permits, and directions of engineer and owner, and shall not unnecessarily encumber any part of the site.

6.39.1 Contractor shall not overload or permit any part of any structure to be loaded with such weight as will endanger its safety, nor shall he subject any part of the work to stresses or pressures that will endanger it.

6.39.2 Contractor shall enforce owner's instructions in connection with signs, advertisements, fires, and smoking.

6.39.3 Contractor shall arrange and cooperate with owner in routing and parking of automobiles of his employees, subcontractors and other personnel, and in routing material delivery trucks and other vehicles to the project site.

6.40 Protection of Existing Property Improvements

Any existing surface or subsurface improvements, such as pavements, curbs, sidewalks, pipes or utilities, footings or structures (including portions thereof), and/or trees and shrubbery not indicated on the drawings or noted in the specifications as being removed or altered shall be protected from damage during construction of the project. Any such improvements damaged during construction of the project shall be restored to a condition equal to that existing at time of award of contract.

6.41 Temporary Heat

The general contractor shall provide heat, fuel, and services as necessary to protect all work and materials within all habitable areas of permanent building construction for all contracts against injury from dampness and cold until final acceptance of all work and materials for the project --unless building is fully occupied by the owner prior to such acceptance in which case the owner shall assume all expenses of heating from date of full occupancy. In areas outside those covered above, each prime contractor shall be responsible for providing such temporary heat, fuel, and services as required to protect his work or shall make all necessary arrangements with the general contractor for providing such temporary heat, fuel, and services. Unless otherwise specifically permitted by stated special conditions, the permanent heating system shall not be used to provide temporary heat. Contractor's proposed methods of heating shall be submitted for approval.

ARTICLE 7

WORK BY OTHERS

7.1 Additional Related Work
The owner may perform additional work related to the project by himself, or he may let other direct contracts thereof that shall contain general conditions similar to these herein. The contractor will afford the other contractors who are parties to such direct contracts (or the owner, if he is performing the additional work himself) reasonable opportunity for the introduction and storage of materials and equipment and the execution of work and shall properly connect and coordinate his work with theirs.

7.2 Report of Defects or Deficiencies
If any part of the contractor's work depends on proper execution or results upon the work of any such other contractor (or the owner), the contractor will promptly report to the engineer in writing any defects or deficiencies in such work that render it unsuitable for such proper execution and results.

7.3 Altering the Work of Others
The contractor will do all cutting, fitting, and patching of his work that may be required to make its several parts come together properly and fit it to receive or be received by such other work. The contractor will not endanger any work of others by cutting, excavating, or otherwise altering their work and will only cut or alter their work with the written consent of the engineer and of the other contractors whose work will be affected.

7.4 Prior Written Notice of Additional Work
If the performance of additional work by other contractors or the owner is not noted in the contract documents prior to the execution of the contract, written notice thereof shall be given to the contractor prior to starting any such additional work. If the contractor believes that the performance of such additional work by the owner or others involves him in additional expense or entitles him to an extension of the contract time, he may make a claim as provided herein in **Articles 11** and **12**.

7.5 Contractor's Allowance for Work of Others
Where practicable, the general contractor shall build around the work of other separate contractors or shall leave chases, slots, and holes as required to receive and to conceal within the general construction work the work of such other separate contractors as directed by them. Where such chases, slots, etc., are impracticable, the work shall require specific approval of the engineer.

7.6 Necessary Alterations Not Built by General Contractor
Necessary chases, slots, and holes not built or left by the general contractor shall be cut by the separate contractor requiring such alterations after approval of the general contractor. The general contractor shall do all patching and finishing of his work where cut by other contractors at the expense of such other contractors.

7.7 Contractors Sharing of the Work Site
Cooperation is required in the use of site facilities and in the detailed execution of the work. Each contractor shall coordinate his operations with those of the other contractors for the best interest of the work in order to prevent delay in the execution thereof.

7.8 Monitoring Contractors Work
Each contractor shall keep himself informed of the progress of the work of other contractors. Should lack of progress or defective workmanship on the part of other contractors interfere with his operations, the contractor shall notify the engineer immediately. Lack of such notice to the engineer will be construed as acceptance by the contractor for proper coordination of his own work.

7.9 Contractor's Progress of Work Notice(s)
Each contractor shall give notice(s) of the progress of his work so as to allow other contractors adequate opportunity to properly direct and coordinate their work. The general contractor shall give notice(s) of the progress of his work so that work of other contractors, when required to be concealed, may be placed before the general construction work.

All such notices shall be submitted (a) to the engineer with copies to other prime contractors on the project, and (b) sufficiently ahead of job progress to permit adequate time for the other prime contractors to coordinate their work.

7.10 Notice Negligence and Other Liability
The cost of extra work resulting from lack of notices, untimely notices, and failure to respond to notices, defective work, or lack of coordination shall be borne by the contractor responsible for such lack of notices, etc.

ARTICLE 8

OWNER'S RESPONSIBILITIES

8.1 Communication
The owner will issue all communications to the contractor through the engineer.

8.2 Engineer's Termination
In case of termination of the employment of the engineer, the owner will appoint an engineer against whom the contractor makes no reasonable objection and whose status under the contract documents shall be that of the former engineer. Any dispute in connection with such appointment shall be subject to arbitration, if mutually agreeable.

8.3 Prompt Payments to Contractor
The owner will promptly furnish the data required of him under the contract documents and shall promptly make payments to the contractor after they are due as provided herein in **Article 14**.

8.4 Owner's Duties
Owner's duties in respect of providing lands and easements and providing engineering surveys to establish reference points are set forth herein in **Article 4**. **Article 4**, paragraph 4.2 refers to the owner identifying and making available to contractor copies of surveys and investigation reports of subsurface and latent physical conditions at the site or otherwise affecting performance of the work, which has been relied upon by the engineer in preparing the drawings and specifications.

8.5 Owner's Liability Responsibilities
The owner's responsibilities in respect of liability and property insurance are set forth herein in **Article 5**, paragraph 5.4.

8.6 Owner's Right to Request Changes
In addition to owner's rights to request changes in the work in accordance with herein **Article 10**, the owner (especially in certain instances as provided in **Article 10**, paragraph 10.4) will be obligated to execute change orders.

8.7 Owner's Right to Stop or Suspend Work
In connection with the owner's right to stop or suspend work, see herein **Article 15**, paragraph 15.1. **Article 15**, paragraph 15.3 deals with the owner's right to terminate services of the contractor under certain circumstances.

8.8 Owner's Use of Completed or Partially Completed Work
The owner shall have the right to take possession of and use any completed or partially completed portions of the work, notwithstanding the fact that the time for completing the entire work or any portion thereof may not have expired, but such taking possession and use shall not be deemed an acceptance of any work not completed in accordance with the contract documents. If such prior use increases the cost of or delays the work, the contractor shall be entitled to such extra compensation or extension of time or both, except by prior agreement as the engineer may determine.

8.9 Other Owner's Responsibility
Owner's responsibility in respect of certain inspections, tests, and approvals is set forth herein in **Article 9**.

ARTICLE 9

ENGINEER'S STATUS DURING CONSTRUCTION

9.1 Owner's Representative
The engineer shall be the owner's representative during the construction period. The duties and responsibilities and the limitations of authority of the engineer as the owner's representative during construction are set forth herein in **Articles 1** through **17** of these "General Conditions" and shall not be extended without written consent of the owner and the engineer.

9.1.1 The engineer's decision in matters relating to aesthetics shall be final if within the terms of the contract documents.

9.1.2 Except as may be otherwise provided in this contract, all claims, counter-claims, disputes, and other matters in question between the owner and the contractor arising out of or relating to this agreement or the breach thereof will be decided by arbitration if the parties hereto mutually agree, or in a court of competent jurisdiction within the state in which the owner is located.

9.2 Visits to Site
The engineer will make periodic visits to the site to observe the progress and quality of the executed work and to determine, in general, if the work is proceeding in accordance with the contract documents. The engineer will not be required to make continuous on-site observations to check the quality or quantity of the work. The engineer's efforts will be directed toward ascertaining on behalf of the owner that the completed project will conform to the requirements of the contract documents. On the basis of his on-site observations as an experienced and qualified design professional, he will keep the owner informed of the progress of the work and will endeavor to guard the owner against defects and deficiencies in the work of contractors.

9.3 Clarifications and Interpretations
The engineer will issue with reasonable promptness such written clarifications or interpretations of the contract documents (in the form of drawings or otherwise) as he may determine necessary, which shall be consistent with or reasonably inferable from the overall intent of the contract documents. If the contractor believes that a written clarification and interpretation entitles him to an increase in the contract price or extension of contract time, he may make a claim thereof as provided herein in **Articles 11** and **12.**

9.4 Measurement of Quantities
All work completed under the contract will be measured by the engineer according to the United States Standard Measures. All linear surface measurements will be made horizontally or vertically as required by the item measured.

9.5 Rejecting Defective Work
The engineer will have authority to disapprove or reject work which is "defective" (which term is hereinafter used to describe work that is unsatisfactory, faulty, or defective, does not conform to the requirements of the contract documents, does not meet the requirements of any inspection, test, or approval referred to in the special conditions, or has been damaged prior to final acceptance). The engineer will also have authority to require special inspection or testing of the work as provided in the special conditions, whether or not the work is fabricated, installed, or completed.

9.6 Shop Drawings, Change Orders, and Payments
In connection with the engineer's responsibility as to shop drawings and samples, see herein **Article 6**, paragraphs 6.25 through 6.27, inclusively.

9.7 Engineer's Responsibility for Change Orders

In connection with the engineer's responsibility for change orders, see herein **Articles 10, 11,** and **12.**

9.8 Engineer's Responsibility Regarding Application for Payment
In connection with the engineer's responsibilities in respect of "Application for Payment," etc., see herein **Article 14.**

9.9 Resident Project Representative
The owner or the engineer will provide on-site representation sufficient to guarantee that construction is in general compliance with the construction drawings and the contract specifications.

9.10 Decisions on Disagreements
The engineer will be the initial interpreter of the terms and conditions of the contract documents and the judge of the performance thereunder. In his capacity as interpreter and judge he will exercise his best efforts to insure faithful performance by both the owner and the contractor. He will not show partially to either and shall not be liable for the result of any interpretation or decision rendered in good faith. Claims, disputes, and other matters relating to the execution and progress of the work or the interpretation of or performance under the contract documents shall be referred initially to the engineer for decision, which he shall render in writing within a reasonable time.

9.11 Right to Request Arbitration
Either the owner or the contractor, if the other agrees, may request arbitration with respect to any such claim, dispute, or other matter that has been referred to the engineer, except any that have been waived by the making or acceptance of final payment as provided herein in **Article 14**, paragraph 14.11, and such arbitration is to be in accordance with herein **Article 16**. However, no request for arbitration of any such claim, dispute, or other matter shall be made until the earlier of (a) the date on which the engineer has rendered his decision or (b) the tenth day after the parties have presented their evidence to the engineer if the engineer has not rendered his written decision before that date. No request for arbitration shall be made later than thirty (30) days after the date on which the engineer rendered his written decision in respect of the claim, dispute, or other matter to which arbitration is sought, and the failure to request arbitration within said thirty (30) days' period shall result in the engineer's decision being final and binding upon the owner and the contractor. If the engineer renders a decision after arbitration proceedings have been initiated, such decision may be entered as evidence but shall not supersede the arbitration proceedings except where the decision is acceptable to the parties concerned.

9.12 Limitations of Engineer's Responsibilities to Contractor and Others
Neither the engineer's authority to act under this herein **Article 9** nor any decision made by him in good faith either to exercise or not exercise such authority shall give rise to any duty or responsibility of the engineer to the contractor, any subcontractor, any of their agents or employees or any other person performing any of the work.

9.13 Engineer's Limitations of Responsibility
The engineer will not be responsible for the construction means, methods, techniques, sequences or procedures, or the safety precautions and programs incident thereto, and he will not be responsible for the contractor's failure to perform the work in accordance with the contract documents.

9.14 Engineer's Limitations of Responsibility for Omissions
The engineer will not be responsible for the acts or omissions of the contractor, or any subcontractors, or any of his or their agents or employees, or any other persons performing any of the work.

ARTICLE 10

CHANGES IN WORK

10.1 Owner's Right to Initiate Change Orders
Without invalidating the agreement, the owner may, at any time or from time-to-time, order additions, deletions, or revisions in the work; these will be authorized by change orders. Upon receipt of a change order, the contractor will

proceed with the work involved. All such work shall be executed under the applicable conditions of the contract documents. If any change order causes an increase or decrease in the contract price or an extension or shortening of the contract time, an equitable adjustment will be made as provided herein in **Article 11** or **Article 12**. A change order signed by the contractor indicates his agreement therewith.

10.2 Authorization of Minor Changes or Alterations
The engineer may authorize minor changes or alterations in the work not involving extra cost and not inconsistent with the overall intent of the contract documents. These changes and/or alterations may be accomplished by a field order. If the contractor believes that any minor change or alteration authorized by the engineer entitles him to an increase in the contract price or extension of contract time, the contractor may make a claim thereof as provided herein in **Articles 11** and **12**.

10.3 Unauthorized Additional Work
Additional work performed by the contractor without authorization of a change order will not entitle him to an increase in the contract price or an extension of the contract time except in the case of an emergency as provided herein in **Article 6**, paragraph 6.21 and except as provided herein in **Article 10**, paragraph 10.2.

10.4 Execution of Change Order(s)
The owner will execute appropriate change orders prepared by the engineer covering changes in the work to be performed as provided herein in **Article 4**, paragraph 4.4, and work performed in an emergency as provided herein in **Article 6**, paragraph 6.21 and any other claim of the contractor for a change in the contract time or the contract price, which is approved by the engineer.

10.5 Notification of Surety of Changes
It is the contractor's responsibility to notify his surety of any changes affecting the general scope of the work or change in the contract price and the amount of the applicable bonds shall be adjusted accordingly. The contractor will furnish proof of such adjustment to the owner.

ARTICLE 11

CHANGE OF CONTRACT PRICE

11.1 Total Compensation Payable to Contractor
The contract price constitutes the total compensation payable to the contractor for performing the work. All duties, responsibilities, and obligations assigned to or undertaken by the contractor shall be at his expense without changing the contract price.

11.2 Owner's Written and/or Verbal Change Orders

11.2.1 The owner may, at any time and without notice to the sureties, by written order designated or indicated to be a change order, make any change in the work within the general scope of the contract, including but not limited to changes: (a) in the specifications (including drawings and designs); (b) in the method or manner of performance of the work; (c) in the owner-furnished facilities, equipment, materials, services, or site; or (d) directing acceleration in the performance of the work, and/or (e) directing the contractor to stop work for a stated time.

11.2.2 Any other written order or an oral order (which terms as used in this paragraph shall include direction, instruction, interpretation, or determination) from the owner, which causes any such change, shall be treated as a change order under this clause, provided that the contractor gives the owner written notice stating the date, circumstances, and source of the order and that the contractor regards the order as a change order.

11.2.3 Except as herein provided, no order, statement, or conduct of the owner shall be treated as a change under this clause or entitle the contractor to an equitable adjustment hereunder.

11.2.4 If any change under this clause causes an increase or decrease in the contractor's cost of, or the time required for, the performance of any part of the work under this contract, whether or not changed by any order, an equitable adjustment shall be made and the contract modified in writing accordingly: Provided, however, that except for claims based on defective specifications, no claim for any change under above listed paragraph 11.2.2 shall be allowed for any costs incurred more than twenty (20) days before the contractor gives written notice as therein required. And provided further that in the case of defective specifications for which the owner is responsible, the equitable adjustment shall include any increased cost reasonably incurred by the contractor in attempting to comply with such defective specifications.

11.2.5 If the contractor intends to assert a claim for an equitable adjustment under this clause, he must, within 30 days after receipt of a written change order under above listed paragraph 11.2.1 or the furnishing of a written notice under above listed paragraph 11.2.2, submit to the owner a written statement setting forth the general nature and monetary extent of such claim, unless this period is extended by the owner. The statement of claim hereunder may be included in the notice under above listed paragraph 11.2.2. If not received by the owner within 30 days, the owner may choose to reject the contractor's information relating to such claim without review.

11.2.6 No claim by the contractor for an equitable adjustment hereunder shall be allowed if asserted after final payment under this contract.

11.3 Determination of Change Order Compensation

The compensation of any portion of the work covered by a change order or of any claim for an increase or decrease in the contract price shall be determined in one of the following ways:

11.3.1 where the change order involved is covered by unit prices contained in the contract documents by application of unit prices to the quantities of the items involved. Should the items (by quantity) be increased or decreased by more than 15 percent (15%) from that stipulated in the contract documents and the total dollar amount is significant (greater than ten thousand dollars [$10,000]), either the owner or the contractor may request to negotiate a new unit price for the quantities in excess of the 15 percent (15%) window to protect their financial interest in the project.

11.3.2 by negotiated lump sum.

11.3.3 the actual cost for labor, direct overhead, materials, supplies, equipment, and other services necessary to complete the work plus a fixed amount to be agreed upon to cover the cost of general overhead and profit to be negotiated.

11.4 Defining "Cost of the Work"

The term "Cost of the Work" (also "Cost of Work") means the sum of all costs necessarily incurred and paid by the contractor in the proper performance of the work. Except as otherwise may be agreed to in writing by owner, such costs shall be in amounts no higher than those prevailing in the locality of the project shall include only the following items and shall not include any of the costs itemized herein in **Article 11**, paragraph 11.5:

11.4.1 payroll costs for employees in the direct employ of contractor in the performance of the work under schedules of job classifications agreed upon by owner and contractor. Payroll costs for employees not employed full time on the work shall be apportioned on the basis of their time spent on the work. Payroll costs shall include, but not be limited, to, salaries and wages plus the cost of fringe benefits, which shall include social security contributions, unemployment, excise and payroll taxes, workmen's compensation, health and retirement benefits, bonuses, sick leave, vacation, and holiday pay applicable thereto. Such employees shall include superintendents and foremen at the site. The expenses of performing work after regular working hours, on Sunday, or legal holidays shall be included in the above to the extent authorized by owner.

11.4.2 cost of all materials and equipment furnished and incorporated in the work, including costs of transportation and storage thereof, and manufacturers' field services required in connection therewith. All cash discounts shall accrue to contractor unless owner deposits funds with contractor with which to make payments, in which case the cash discounts shall accrue to owner. All trade discounts, rebates and refunds, and all returns from sale of surplus materials and equipment shall accrue to owner, and contractor shall make provisions so that they may be obtained.

11.4.3 payments made by contractor to the subcontractors for work performed by subcontractors. If required by owner, contractor shall obtain competitive bids from subcontractors acceptable to him and shall deliver such bids to owner who will then determine with the advice of engineer which bids will be accepted. If a subcontract provides that the subcontractor is to be paid on the basis of "Cost of Work" plus a fee, the cost of the work shall be determined in accordance with herein **Article 11**, paragraphs 11.4 and 11.5. All subcontracts shall be subject to the other provisions of the contract documents insofar as applicable.

11.4.4 costs of special consultants (including, but not limited to, engineers, architects, testing laboratories, surveyors, lawyers, and accountants) employed for services specifically related to the work.

11.4.5 supplemental costs including the following:

11.4.5.1 the proportion of necessary transportation, traveling, and subsistence expenses of contractor's employees incurred in discharge of duties connected with the work.

11.4.5.2 cost, including transportation and maintenance, of all materials, supplies, equipment, machinery, appliances, office, and temporary facilities at the site and hand tools not owned by the workmen that are consumed in the performance of the work, and cost less market value of such items used but not consumed, which remain the property of contractor.

11.4.5.3 rentals of all construction equipment and machinery and the parts thereof whether rented from contractor or others in accordance with rental agreements approved by owner with the advise of engineer, and the costs of transportation, loading, unloading, installation, dismantling and removal thereof - all in accordance with terms of said rental agreements. The rental of any such equipment, machinery, or parts shall cease when the use thereof is no longer necessary for the work.

11.4.5.4 sales, use, or similar taxes related to the work and for which contractor is liable, imposed by any governmental authority.

11.4.5.5 deposits lost for causes other than contractor's negligence, royalty payments, and fees and licenses. Costs for permits and licenses must be shown as a separate item.

11.4.5.6 losses, damages, and expenses, not compensated by insurance or otherwise, sustained by contractor in connection with the execution of, and to, the work, provided they have resulted from causes other than the negligence of contractor, any subcontractor, or anyone directly or indirectly employed by any of them or for whose acts any of them may be liable. Such losses shall include settlements made with the written consent and approval of owner. No such losses, damages, and expenses shall be included in the cost of the work for the purpose of determining contractor's fee. If, however, any such loss or damage requires reconstruction and contractor is placed in charge thereof, he shall be paid for his services a fee proportionate to that stated herein in **Article 11**, paragraph 11.6.2.

11.4.5.7 the cost of utilities, fuel, and sanitary facilities at the site.

11.4.5.8 minor expenses such as telegrams, long distance telephone calls, telephone service at the site, expressage, and similar petty cash items in connection with the work.

11.4.5.9 cost of premiums for additional bonds and insurance required because of changes in the work.

11.5 Limitations Regarding "Cost of Work"
The term "Cost of Work" shall not include any of the following:

11.5.1 payroll costs and other compensation of contractor's officers, executives, principals (of partnership and sole proprietorships), general managers, engineers, architects, estimators, lawyers, auditors, accountants, purchasing and contracting agents, expediters, timekeepers, clerks, and other personnel employed by contractor, whether at the site, or in his principal, or a branch office for general administrator of the work and not specifically included in the schedule referred to herein in **Article 11**, subparagraph 11.4.1 - all of which are to be considered administrative costs covered by the contractor's fee.

11.5.2 expenses of contractor's principal and branch offices other than his office at the site.

11.5.3 any part of contractor's capital expenses, including interest on contractor's capital employed for the work and charges against contractor for delinquent payments.

11.5.4 cost of premiums for all bonds and for all insurance policies whether or not contractor is required by the contract documents to purchase and maintain the same (except as otherwise provided herein in **Article 11**, subparagraph 11.4.5.9.)

11.5.5 costs due to the negligence of contractor, any subcontractor, or anyone directly or indirectly employed by any of them or for whose acts any of them may be liable, including but not limited to the correction of defective work, disposal of materials or equipment wrongly supplied, and making good any damage to property.

11.5.6 other overhead or general expense costs of any kind and the costs of any item not specifically and expressly included herein in **Article 11**, paragraph 11.4.

11.6 Determining Contractor's Fee
The contractor's fee, which shall be allowed to contractor for his overhead and profit, shall be determined as follows:

11.6.1 a mutually acceptable firm, fixed price; or if none can be agreed upon,

11.6.2 a mutually acceptable fixed fee based on the estimate of the various portions of the "Cost of Work."

11.7 Credits from Contractor to Owner
The amount of credit to be allowed by contractor to owner for any such change that results in a net decrease in cost will be the amount of the actual net decrease. When both additions and credits are involved in any one charge, the net shall be computed to include overhead and profit, identified separately, for both additions and credits.

11.8 Itemizing Cost
Whenever the cost of any work is to be determined pursuant to herein **Article 11**, paragraphs 11.4 and 11.5, contractor will submit in form prescribed by engineer an itemized cost break-down together with supporting data.

11.9 Allowances
It is understood that the contractor has included in the contract price all allowances so named in the contract documents and shall cause the work so covered to be done by such material-men, suppliers, or subcontractors and for such sums within the limit of the allowances as the engineer may approve. Upon final payment, the contract price shall be adjusted as required and an appropriate change order issued. The contractor agrees that the original contract price includes such sums as he deems proper for costs and profit on account of cash allowances. No demand for additional cost or profit in connection therewith will be allowed.

11.9.1 These allowances shall cover the cost of the contractor less any applicable trade discount of the materials and equipment required by the allowance delivered at the site and all applicable taxes.

11.9.2 The contractor's costs for unloading and handling on the site: labor, installation costs, overhead, profit, and other expenses contemplated for the original allowance shall be included in the contract price and not in the allowance.

11.9.3 Whenever the cost as described in above listed **Article 11**, paragraph 11.9.1 is more or less than the allowance, the contract price shall be adjusted accordingly by change order. The amount of the change order will recognize changes, if any, in handling costs on the site: labor, installation costs, overhead, profit, and other expenses except that whenever unit price allowances are stipulated for brick, the change order will not include any cost as described in above listed **Article 11**, paragraph 11.5.

ARTICLE 12

CHANGE OF CONTRACT TIME

12.1 Contract Time Change Order
The contract time may only be changed by a change order. Any claim for an extension in the contract time shall be based on written notice delivered to owner and engineer within ten (10) days of the occurrence of the event giving rise to the claim. Notice of the extent of the claim with supporting data shall be delivered within forty-five (45) days of such occurrence unless engineer allows an additional period of time to ascertain more accurate data. All claims for adjustment in the contract time shall be determined by engineer if owner and contractor cannot otherwise agree. Any change in the contract time resulting from any such claim shall be incorporated in a change order.

12.2 Extended Contract Time Requirements
The contract time will be extended in an amount equal to time lost due to delays beyond the control of contractor if he makes a claim therefore as provided herein in **Article 12**, paragraph 12.1. Such delays shall include, but not be restricted to acts or neglect by any separate contractor employed by owner, fires, floods, labor disputes, epidemics, abnormal weather conditions, or acts of God.

12.3 Binding Time Limits
All time limits stated in the contract documents are of the essence of the agreement. The provisions of this herein **Article 12** shall not exclude recovery for damages (including compensation for additional professional services) for delay by either party.

12.4 Claims Due to Drawing(s) Delays
No claim for delay shall be allowed because of failure to furnish drawings until two weeks after demand for such drawings and not then unless such claim be reasonable.

12.5 Other Damage Recovery Rights
This **Article 12** does not exclude the recovery of damages for delay by either party under other provisions in the contract documents.

ARTICLE 13

GUARANTY

Contractor's Guaranty Requirements

The contractor shall guarantee all materials and equipment furnished and work performed for a period of one (1) year from the date of substantial completion. The contractor warrants and guarantees for a period of one (1) year from the date of substantial completion of the system that the completed system is free from all defects due to faulty materials or workmanship and the contractor shall promptly make such corrections as may be necessary by reason of such defects including the repairs of any damage to other parts of the system resulting from such defects. The owner will give notice of observed defects with reasonable promptness. In the event that the contractor should fail to make such repairs, adjustments, or the work that may be made necessary by such defects, the owner may do so and charge the contractor the cost thereby incurred. The performance bond shall remain in full force and effect through the guarantee period.

ARTICLE 14

PAYMENTS AND COMPLETION

14.1 Payments to Contractor

At least ten (10) days before each progress payment falls due (but not more often than once a month), the contractor will submit to the engineer a partial payment estimate filled out and signed by the contractor covering the work performed during the period covered by the partial payment estimate and supported by such data as the engineer may reasonably require. If a payment is requested on the basis of materials and equipment not incorporated in the work but delivered and suitably stored at or near the site, the partial payment estimate shall also be accompanied by such supporting data, satisfactory to the owner. The engineer will, within ten (10) days after receipt of each partial payment estimate, either indicate in writing his approval of payment and present the partial payment estimate to the owner, or return the partial payment estimate to the contractor indicating in writing his reasons for refusing to approve payment. In the latter case, the contractor may make the necessary corrections and resubmit the partial payment estimate. The owner will, within ten (10) days of presentation to him of an approved partial payment estimate, pay the contractor a progress payment on the basis of the approved partial payment estimate. The owner shall retain a portion of the amount otherwise due the contractor in accordance with Section 31-5-33 of the Mississippi Code.

14.2 Contractor's Warranty of Title

The contractor warrants and guarantees that title to all work, materials, and equipment covered by an "Application for Payment," whether incorporated in the project or not, will have passed to the owner prior to the making of the "Application for Payment" free and clear of all liens, claims, security, interests and encumbrances (hereafter in these general conditions referred to as "Liens") and that no work, materials, or equipment covered by an "Application for Payment" will have been acquired by the contractor or by any other person performing the work at the site or furnishing materials and equipment for the project, subject to an agreement under which an interest therein or encumbrance thereon is retained by the seller or otherwise imposed by the contractor or such other person.

14.3 Approval of Payments

The engineer's approval of any payment requested in an "Application for Payment" shall constitute a representation by him to the owner based on the engineer's on-site observations of the work in progress as an experienced and qualified design professional and on his review of the "Application for Payment" and the supporting data that the work has progressed to the point indicated; that, to the best of his knowledge, information, and belief, the quality of the work is in accordance with the contract documents (subject to an evaluation of the work is a functioning project upon substantial completion, to the results of any subsequent tests called for in the contract documents and any qualifications stated in his approval); and that the contractor is entitled to payment of the amount approved. However, by approving any such payment the engineer shall not thereby be deemed to have represented that he made exhaustive or continuous on-site observations to check the quality or the quantity of the work; or that he has reviewed the means, methods, techniques, sequences, and procedures of construction; or that he has made any examination to ascertain how or for what purpose the contractor has used the moneys paid or to be paid to him on account of the contract price; or that title to any work, materials, or equipment has passed to the owner free and clear of any liens.

14.4 Contractor's Certification Statement
The contractor shall make the following certification on each request for payment:

"I hereby certify that the labor and materials listed on this request for payment have been used in the construction of this work or that all materials included in this request for payment and not yet incorporated into the construction are now on the site or stored at an approved location, and payment received from the last request for payment has been used to make payments to all first tier subcontractors and suppliers except as listed below."

14.5 Engineer's Final Payment Approval
The engineer's approval of final payment shall constitute an additional representation by him to the owner that the conditions precedent to the contractor's being entitled to final payment as set forth herein in **Article 14**, paragraph 14.11 have been fulfilled.

14.6 Engineer's Right to Refuse Payment Approval
The engineer may refuse to approve the whole or any part of any payment if, in his opinion, he is unable to make such representations to the owner as above listed in **Article 14**, paragraph 14.5. He may also refuse to approve any such payment, or because of subsequently discovered evidence or the results of subsequent inspection or tests, nullify any such payment previously approved, to such extent as may be necessary in his opinion to protect the owner from loss because:

14.6.1 the work is defective, or completed work has been damaged requiring connection or replacement;

14.6.2 the work for which payment is requested cannot be verified;

14.6.3 claims or liens have been filed, or there is reasonable evidence indicating the probable filing thereof;

14.6.4 the contract price has been reduced because of modifications;

14.6.5 the owner has been required to correct defective work or complete the work in accordance herein with **Article 13**, paragraph 13.1;

14.6.6 of unsatisfactory prosecution of the work, including failure to clean up as required by herein **Article 6**, paragraphs 6.28, 6.29 and 6.30;

14.6.7 of persistent failure to cooperate with other contractors on the project and persistent failure to carry out the work in accordance with the contract documents;

14.6.8 of liquidated damages payable by the contractor; or

14.6.9 of any other violation of or failure to comply with the provisions of the contract documents.

14.7 Owner's Use of Completed or Partially Completed Work
Prior to substantial completion, the owner, with the approval of the engineer and with the concurrence of the contractor, may use any completed or substantially completed portions of the work. Such use shall not constitute an acceptance of such portions of the work.

14.8 Owner's Right to Entry
The owner shall have the right to enter the premises for the purpose of doing work not covered by the contract documents. This provision shall not be construed as relieving the contractor of the sole responsibility for the care and protection of the work or the restoration of any damaged work except such as may be caused by agents or employees of the owner.

14.9 Engineer's Certificate
Upon completion and acceptance of the work the engineer shall issue a certificate attached to the final payment request that the work has been accepted by him under the conditions of the contract documents. The entire balance found to be due the contractor including the retained percentages, but except such sums as may be lawfully retained by the owner, shall be paid to the contractor within sixty (60) days of completion and acceptance of the work.

14.10 Contractor's Indemnification Requirements to Owner
The contractor will indemnify and save the owner or the owner's agents harmless from all claims growing out of the lawful demands of subcontractors, laborers, workmen, mechanics, material-men, and furnishes of machinery and parts thereof, equipment, tools, and all supplies incurred in the furtherance of the performance of the work. The contractor shall, at the owner's request, furnish satisfactory evidence that all obligations of the nature designated above have been paid, discharged, or waived. If the contractor fails to do so, the owner may, after having notified the contractor, either pay unpaid bills or withhold from the contractor's pay from the contractor's unpaid compensation a sum of money deemed reasonably sufficient to pay any and all such lawful claims until satisfactory evidence is furnished that all liabilities have been fully discharged whereupon payment to the contractor shall be resumed in accordance with the terms of the contract documents, but in no event shall the provisions of this sentence be construed to impose any obligations upon the owner to either the contractor, his surety, or any third party. In paying any unpaid bills of the contractor, any payment so made by the owner shall be considered as a payment made under the contract documents by the owner to the contractor and the owner shall not be liable to the contractor for any such payments made in good faith.

14.11 Acceptance of Final Payment as Release
The acceptance by the contractor of final payments shall be and operate as a release to the owner of all claims and all liability to the contractor other than claims in stated amounts as may be specifically excepted by the contractor for all things done or furnished in connection with his work and for every fact and neglect of the owner and others relating to or arising out of his work. Any payment, however, final or otherwise, shall not release the contractor or his sureties from any obligations under the contract documents or the performance bond and payment bonds.

ARTICLE 15

SUSPENSION OF WORK AND TERMINATION

15.1 Owner May Suspend Work
The owner may, at any time and without cause, suspend the work or any portion thereof for a period of not more than ninety (90) days by notice in writing to the contractor and the engineer, which shall fix the date on which work shall be resumed. The contractor will resume the work on the date so fixed. The contractor will be allowed an increase in the contract price or an extension of the contract time, or both, directly attributable to any suspension if he makes claim therefore as provided herein in **Articles 11** and **12**.

15.2 Work During Inclement Weather
No work shall be done under these specifications except by permission of the owner when the weather is unfit for good and careful work to be performed. Should the severity of the weather continue, the contractor, upon the direction of the owner, shall suspend all work until instructed to resume operations by the owner and the contract time shall be extended to cover the duration of the order. Work damaged during the periods of suspension due to inclement weather shall be repaired and/or replaced by the contractor. Any compensation for repairs or replacements shall be subject to approval of the owner.

15.3 Owner May Terminate
If the contractor is adjudged bankrupt or insolvent, or if he makes a general assignment for the benefit of his creditors, or if a trustee or receiver is appointed for the contractor or for any of his property, or if he files a petition to take advantage of any debtor's act or to reorganize under the bankruptcy or similar laws, or if he repeatedly fails to

supply sufficient skilled workman or suitable materials or equipment, or if he repeatedly fails to make prompt payments to subcontractors or for labor, materials, and/or equipment, or he disregards laws, ordinances, rules regulations or orders of any public body having jurisdiction, or if he disregards the authority of the engineer, or if he otherwise violates any provision of the contract documents, then the owner may, without prejudice to any other right or remedy and after giving the contractor and his surety seven (7) days written notice, terminate the services of the contractor and take possession of the project and of all materials, equipment, tools, construction equipment, and machinery thereon owned by the contractor and finish the work by whatever method he may deem expedient. In such case the contractor shall not be entitled to receive any further payment until the work is finished. If the unpaid balance of the contract price exceeds the direct and indirect costs of completing the project, including compensation for additional professional services, such excess shall be paid to the contractor. If such costs exceed such unpaid balance, the contractor or the surety will pay the difference to the owner. Such costs incurred by the owner will be determined by the engineer and incorporated in a change order.

15.4 Rights of Owner Against Terminated Contractor

Where the contractor's services have been so terminated by the owner, said terminations shall not affect any rights of the owner against the contractor then existing or which may thereafter accrue. Any retention or payment of moneys by the owner due the contractor will not release the contractor from liability.

15.5 Owner's Right to Abandon Project

Upon seven (7) days written notice to the contractor and the engineer, the owner may, without cause and without prejudice to any other right or remedy, elect to abandon the project and terminate the agreement. In such case, the contractor shall be paid for all work executed and any expenses sustained plus a reasonable profit.

15.6 Removal of Equipment

In the case of termination of this contract before completion for any cause whatever, the contractor, if notified to do so by the owner, shall promptly remove any part or all of his equipment and supplies from the property of the owner. Should the contractor not remove such equipment and supplies, the owner shall have the right to remove them at the expense of the contractor. Equipment and supplies shall not be construed to include such items for which the contractor has been paid in whole or in part.

15.7 Contractor May Stop Work or Terminate

If, through no act or fault of the contractor, the work is suspended for a period of more than ninety (90) days by the owner, or under an order of court or other public authority, or the engineer fails to act on any "Application for Payment" within sixty (60) days after it is submitted, or the owner fails to pay the contractor any sum approved by the engineer or awarded by arbitrators within sixty (60) days of its approval and presentation, then the contractor may, upon seven (7) days written notice to the owner and the engineer, terminate the agreement and recover from the owner payment for all work executed and any expense sustained plus a reasonable profit. In addition and in lieu of terminating the agreement, if the engineer has failed to act on an "Application for Payment" or the owner has failed to make any payment as aforesaid, the contractor may upon seven (7) days notice to the owner and the engineer stop the work until he has been paid all amounts then due.

15.8 Owner Furnished Equipment

In case the owner furnishes equipment to the contractor to install but fails to deliver it to the contractor as required by supplementary or special conditions, and in case such failure causes the contractor additional expense or need for extension of time, the contractor may make such claims upon the owner and obtain adjustments as provided herein.

15.9 Liquidated Damages

If the contractor shall fail to complete the work within the contract time or extension of time granted by the owner, then the contractor will pay to the owner the amount for liquidated damages as shown on his bid for each calendar day that the contractor shall be in default after the time stipulated in the contract documents.

ARTICLE 16

ARBITRATION

16.1 Arbitration Standards and Rules

All claims, disputes and other matters in question arising out of, or related to, this agreement or the breach thereof except for claims which have been waived by the making or acceptance of final payment as provided herein by **Article 14**, paragraph 14.11, shall be decided by arbitration, if all parties mutually agree, in accordance with the "Construction Industry Arbitration Rules of the American Arbitration Association" then obtaining, or in a court of competent jurisdiction. This agreement so to arbitrate shall be specifically enforceable under the prevailing arbitration law. The award rendered by the arbitrators shall be final, and judgment may be entered upon it in any court having jurisdiction thereof. The arbitration decision must present findings of fact, conclusions of law, basis of award, and rationale.

16.2 Notice of Arbitration Requirements

Notice of the request for arbitration shall be filed in writing with the other party to the agreement and with the American Arbitration Association, if both parties mutually agree to arbitration, and a copy shall be filed with the engineer. The request for arbitration shall be made within the thirty (30) day period specified herein in **Article 9**, paragraph 9.11 where applicable, and in all other cases within a reasonable time after the claim, dispute, or other matter in question has arisen and in no event shall it be made after institution of legal or equitable proceedings based on such claim, dispute, or other matter in question would be barred by the applicable statute of limitations.

16.3 Arbitration Affects on Work

The contractor will carry on the work and maintain the progress schedule during any arbitration proceedings unless otherwise agreed by him and the owner in writing.

ARTICLE 17

MISCELLANEOUS

17.1 Recognized Delivery of Notice(s)

Whenever any provision of the contract documents requires the giving of written notice it shall be deemed to have been validly given if delivered in person to the individual or to a member of the firm or to an officer of the corporation for whom it is intended or if delivered at or sent by registered or certified mail, postage prepaid to the last business address known to him who gives the notice.

17.2 Owner's Failure to Pay Contractor

If the owner fails to make payment sixty (60) days after approval by the engineer, in addition to other remedies available to the contractor, there shall be added to each such progress payment, interest at one percent (1%) per month commencing on the first day after said payment is due and continuing until the payment is received by the contractor.

17.3 Engineer's Property

All specifications, drawings, and copies thereof furnished by the engineer shall remain the engineer's property. They shall not be used on another project, and, with the exception of those sets which have been signed in connection with the execution of the agreement, shall be returned to him on request upon completion of the project.

17.4 Non-Limiting Rights and Remedies by Herein Identified Documents

The duties and obligations imposed by these general conditions, special conditions, and supplemental general conditions and the rights and remedies available hereunder, and, in particular but without limitation, the warranties, guarantees, and obligations imposed upon contractor and those in the special conditions and the rights and remedies available to owner and engineer thereunder shall be in addition to, and shall not be construed in any way as a limitation of, any rights and remedies available to them which are otherwise imposed or available by law, by special guarantee, or be other provisions of the contract documents.

17.5 Notice of Injury or Damage Claim

Should the owner or the contractor suffer injury or damage to his/its person or property because of any error, omission or act of the other or of any of his/its employees or agents or others for whose acts he/it is legally liable, claim shall be made in writing to the other party within a reasonable time of the first observance of such injury or damage.

17.6 Laws that Supersede Contract Documents

The contract documents shall be governed by the law of the place (location) of the project.

17.7 Practicable Schedule

The contractor shall within five (5) days or within such time as determined by the owner after date of commencement of work prepare and submit to the owner for approval a practicable schedule showing the order in which the contractor proposes to carry on the work, the date on which he will start the several salient features (including procurement of materials, plans and equipment), and the contemplated dates for completing the same. The schedule shall be in the form of a progress chart of suitable scale to indicate approximately the percentage of work scheduled for completion at any time. The contractor shall enter on the chart the actual progress at such intervals as directed by the owner and shall immediately deliver to the owner three (3) copies thereof. If the contractor fails to submit a progress schedule within the time herein prescribed, the owner may withhold approval of progress payment estimates until such time as the contractor submits the required progress schedule.

17.8 Falling behind the Progress Schedule

If, in the opinion of the owner, the contractor falls behind the progress schedule, the contractor shall take such steps as may be necessary to improve his progress and the owner may require him to increase the number of shifts or overtime operations, days of work, or the amount of construction plant, or update the progress schedule to reflect increased production for meeting the completion date, or all of them, and to submit for approval such supplementary schedule or schedules in chart form as may be deemed necessary to demonstrate the manner in which the agreed rate of progress will be regained, all without additional cost to the owner.

17.9 Failure of Contractor to Comply with Owner Requirements

Failure of the contractor to comply with the requirements of the owner under this provision shall be grounds for determination by the owner that the contractor is not prosecuting the work with such diligence as will insure completion within the time specified. Upon such determination, the owner may terminate the contractor's right to proceed with the work or any separable part thereof in accordance with the clause of the contract entitled, "Termination for Default-Damages for Delay – Time Extensions."

17.10 Failure to Complete the Work on Time

Should the contractor fail to complete the work within the specified time or within any extra time allowed under these specifications, a sum of money determined by the following schedule shall be deducted from any funds due the contractor. The owner shall have the right to recover the said sum or sums from the contractor or from the surety or from both. The amounts of these deductions are to cover the liquidated damages to the owner incurred by additional or other expenses due to the failure of the contractor to complete the work or any part of the work within the time specified, and such deductions are not to be considered penalties.

17.11 Liquidated Damages

The damages indicated in the contract documents shall be considered as liquidated damages for the loss to the owner on account of the expense due to the employment of engineers and their assistants and to any others expenses incurred after the expiration of the contract time as determined by the engineer.

17.12 Laws that Supersede Contract Documents

The contract documents shall be governed by the law of the place (location) of the project.



SITE #6

INTERSECTION OF CLASSIC DRIVE AND NORTH BEVERLY HILLS ROAD

GRAPHIC SCALE

(IN FEET)
1 inch = 200 ft.

SD&W
SHOWS, DEARMAN & WAITS, INC.
CONSULTING ENGINEERS
P.O. BOX 1711
HATTIESBURG, MISSISSIPPI, 39403-1711
301 SECOND AVENUE
HATTIESBURG, MISSISSIPPI, 39401
HTTP://WWW.SDW.COM
P:(601)544-1821
F:(601)544-0501

AERIAL MAP INFORMATION:
2007 NATIONAL AGRICULTURE IMAGERY PROGRAM (NAIP)
USDA-FSA AERIAL PHOTOGRAPHY FIELD OFFICE
NAME: FORREST COUNTY, MISSISSIPPI
PHOTO DATE: 2007

DATE: 01-04-2013
DRAWING No. 11211

DIVISION 16 ELECTRICAL

The Contractor must provide each item mentioned or indicated of quality or subject to qualification noted; perform according to conditions stated each operation prescribed; and provide therefore all necessary labor, equipment, and incidentals for articles, material separations or methods mentioned herein or indicated on the Drawings.

Requirements for the General Conditions, Supplementary Conditions, and Addenda, if issued, shall apply under this Division of Work.

Separation of these Specifications into Divisions and Sections is only for convenience and is not intended to establish limits of work.

Consult index to be certain that set of documents is complete.

INDEX TO DIVISION 16

SECTION 16000	General Provisions
SECTION 16100	Basic Materials and Methods
SECTION 16200	Raceways
SECTION 16250	Grounding
SECTION 16300	Conductors
SECTION 16400	Power Distribution Equipment
SECTION 16600	Electrical Service
SECTION 16650	Distribution System - Poles
SECTION 16800	Mechanical System Wiring
SECTION 16715	Area Wide Mass Notification System
APPENDIX	Construction Notes, Equipment Installation Notes, Site Location Drawings, Electrical Details

SECTION 16000
GENERAL PROVISIONS

1.01 SCOPE:

A. This Section of the Specifications covers all labor, equipment, supplies and materials, and all operations, including cutting, trenching and backfilling, demolition of the existing electrical system, channeling and chasing necessary for the installation of any required electrical wiring in strict accordance with this Section of the Specifications, the applicable Drawings, and equipment manufacturer recommendations.

1.02 SPECIAL CONDITIONS:

A. The bidders for the work covered by the Division of the Specifications shall carefully examine the Plans and Specifications to familiarize themselves with the structure and extent of the various contracts and all applicable documents.

1. Coordination of Work: The Contractor is responsible for coordinating the work as required with the owner and other contractors. The Electrical Contractor is responsible for completion of all electrical items under their Division and cooperating with the Contractor.

2. Work Included: The work involves electrical systems for the building as indicated on the Drawings. Generally the work includes, but is not limited to the following items:
   a. Installing Mass Notification System (MSN) equipment on 55'height Class 2 concrete poles and setting poles at each site location (exact pole location to be staked by Engineer)
   b. Following MNS equipment manufacturers specifications for installation, calibration, testing, and complete operation of MSN
   c. Installing new underground electrical services and/or feeders, protective equipment, metering equipment, conduits, and required directional boring and trenching and backfill.
   d. Coordinating new electrical services and metering requirements with Southern Pine E.P.A.
   e. Installation of all necessary wiring and conduits
   f. Special Purpose outlets and power receptacles
   g. Connection of all equipment furnished by MNS system and others under this project or by the Owner
   h. Maintain clean work area
   i. Testing and adjusting electrical system

1.03 SITE CONDITIONS:

A. The Contractor must visit each site and familiarize himself with all existing conditions prior to submitting bid. No change orders will be allowed because of the Contractor's misunderstanding as to the amount of work involved or their lack of knowledge of any condition with the work.

1.04 PERMITS AND INSPECTIONS:

A. The Contractor shall secure and pay for all taxes, assessments, permits, and inspections required on work performed under this Section of the Specifications.

B. Additional costs to aid the construction of the local retail suppliers shall also be the responsibility of the contractor. Verify any extra costs for any required service extension and coordinate with local retail suppliers and/or owner.

1.05 APPLICABLE STANDARDS AND CODES:

A. All materials and workmanship shall comply with all applicable codes, specifications, local ordinances, industry standards and utility company regulations. The following standards and codes form a part of these specifications:
   1. International Building Code and Family of Codes
   2. State, Municipal, Federal and Local Building Code
   3. National Electrical Code (NEC)
   4. National Fire Protection Association (NFPA)
   5. Underwriters Laboratories
   6. National Electrical Manufacturer's Association
   7. Electronics Industries Association (EIA)
   8. National Electrical Safety Code (ANSI-C2)

1.06 APPROVAL OF MATERIALS AND EQUIPMENT:

A. Equipment is specified by manufacturer's name and catalog number and is intended to establish the minimum standards of quality acceptable. Substitute equipment, equivalent in all respects to that specified, is permitted with the written approval of the Engineer. After contract has been awarded, catalog cuts on all materials and equipment shall be submitted to the Engineer for final approval before purchase, whether substitutions are being made or not. Six (6) copies of Manufacturer's Brochures and Shop Drawings shall be submitted to the Engineer. A complete electrical connection diagram for each electrically controlled component shall be submitted for approval.

B. The approval of Manufacturer's Brochures and Shop Brochures shall not relieve the Contractor from any responsibility for deviation, quantities, physical dimensions, available space, etc., unless approved by the Engineer.

1.07 DEVIATIONS:

A. The Drawings indicate the general arrangement of the electrical work. Details of any major departures deemed necessary by the Contractor shall be submitted to the Engineer for approval. No major departures shall be made without prior written approval.

1.08 FINAL SUBMITTAL:

A. At the completion of the projects prior to final acceptance, each Contractor shall furnish to the Engineer six (6) complete sets of approved Shop Drawings, together with all warranties, maintenance and operating instructions bound in a folder to the Engineer. This folder shall also contain one copy of each of complete operating instructions. The folder shall contain panel boards with breakers, disconnects, meter sockets, wiring devices, lightning arresters, surge protection equipment, communication and data devices, conductors and any other equipment and system furnished. Special requirements shall include manufacturer's installation instructions furnished with equipment, lubricating manuals and replacement parts manuals.

B. This Contractor shall provide as-built drawings at the completion of the job showing all significant changes.

1.09 GUARANTEE:

A. This Contractor shall guarantee to Owner, work performed under this Contract to be free from defects in workmanship and materials for a period of one year from date of final acceptance by the Engineer and the Owner. The Contractor will promptly correct any discrepancies identified during this period within a reasonable period without cost to Owner. Fuses burned out during normal operations after acceptance are also to be included with this guarantee. Furnish box of spare fuses for Owner and deliver to the Owner as directed by Engineer and furnish written verification to Engineer properly signed by Owner.

END OF SECTION

SECTION 16100
BASIC MATERIALS AND METHODS

1.01 GENERAL:

A. MATERIALS: All electrical materials shall be new and purchase through an Authorized Distributor and Manufacturer's Representative for project geographic area, and supplied with full factory warranty. All electrical equipment must be Underwriters' Laboratories, Inc. (UL) approved for the respective application wherever standards have been established by that agency.

B. STANDARD PRODUCTS: The materials furnished under this Section of the Specifications shall be the standard products of manufacturers regularly engaged in the production of such equipment.

C. CIRCUITS: Circuit grouping, conduit or cable runs, and home runs are indicated diagrammatically. Contractor shall provide proper conductors and conduits or cables to produce an operative system and comply with the HVAC system manufacturer's requirements.

D. HOME RUNS: Home Runs are indicated on the Drawings but may be regrouped if Contractor desires. In any case, however, no two ungrounded conductors shall be connected to the same ungrounded lug of a breaker or switch.

1.02 WIRING METHODS:

A. Unless otherwise specified or indicated on the drawings, all exposed wiring shall consist of insulated conductors in rigid zinc coated steel conduit (GRC).

1.03 CONDUIT SYSTEM:

A. Minimum size of conduit and tubing shall be 3/4". Raceways shall be supported with mechanical fastening devices (wire is not acceptable), at intervals not to exceed the requirements of the NEC. Conduits shall be fastened to wooden pole with proper sized conduit straps and to sheet metal boxes and cabinets with two locknuts where required by the National Electrical Code, where insulating bushing are used and where bushing cannot be brought into firm contact with the box; otherwise a single locknut and bushing is acceptable.
Bushings shall be of the insulating type where required by the National Electrical Code. Install heavy wall rigid galvanized steel conduit on all feeders exposed outdoors unless otherwise noted. Where flexible metallic conduit is needed, use "steatite" type in damp or wet locations and green field in dry locations. The maximum length of flexible metallic conduit to be used shall be 72".

1.04 BOXES AND FITTINGS:

A. Each outlet in the wiring or raceway systems shall be provided with an outlet box to suit the conditions encountered. All outlet and junction boxes, conduit fittings, covers and supports shall be galvanized steel. Junction or pull boxes as required by field conditions shall be installed. Each outlet box shall have sufficient volume to accommodate the number of conductors. See Article #370 NEC. Note: All junction boxes shall have covers installed upon completion of the job.

B. Close all unused knockout holes and install galvanized blank covers on boxes having no fixture or device.

C. Plates and/or covers shall be provided on all switches, convenience outlets, receptacles, telephone outlets, computer outlets, and special purpose outlets. All surface outlets shall have jumbo type plates. Hospital rated receptacles shall have red colored plates for identification.

1.05 CONDUCTORS:

A. GENERAL: All wiring shall be 98% conductivity and having 600-volt insulation level. Conductors shall be stranded copper with thermoplastic insulation unless otherwise noted. Solder less pressure connectors, properly taped and wire connectors of insulating material shall be used for all splices where practicable.

C. SIZES: Shall not be less than indicated. Branch circuit conductors shall be not smaller than No. 12 AWG. Conductors for branch circuits of 120 volts more than 100' long from panel to load center shall be No. 10 AWG. Class 1 remote-control and signal-circuit conductors shall not be less than No. 14 AWG Class 2 low-energy remote-control and signal circuit conductors shall be not less than No.16 AWG.

D. INSULATION: Conductors No. 8 AWG or larger shall be Type RHW or THW. Conductors smaller than No. 8 AWG shall be Type TH, THW, or THHN except that No. 16 AWG conductors for Class 2 remote-control and signal circuits may be commercial fixture wire, Type RF-2 or TF. Conductors of all sizes for temperatures in excess of 75 degrees centigrade shall be Type RHH or SA.

E. IDENTIFICATION: Identification of branch circuits shall be of color-coding. Control circuit conductor identification shall be made of color coded insulated conductors, plastic-coated self-sticking printed markers, permanently attached stamped metal foil markers, or equivalent means as approved by the

Engineer. Conductor identification shall be provided within each enclosure where at tap, splice, or termination is made. Control circuit terminals of equipment shall be properly identified. Terminal and conductor identification shall match that shown on approved shop drawings. Hand lettering or marking is not acceptable. Identification of conductors shall be as follows:

1. All branch circuit wiring shall be color-coded by insulation covering as follows:

   120/240-Volts, 3-Wire, 1-Phase (Equipment Service and Main Feeders)
   Phase A-Black
   Phase B-Red
   Neutral-White
   Ground-Green

2. Switch legs - pink with traces of base phase color or other marking as approved by Engineer.

3. Travelers for 3-way Switching - Solid violet or other color as approved by the Engineer.

4 All Conductors - No. 6 and larger may have solid black insulation with use identified by banding with tape at all terminations and access points for not less than 2" along cable. Tape to be the same colors as described.

5. The Phases A, B, neutral and ground conductors shall be established and marked at all panels, electronic panels, equipment connections, etc., as follows: Front to rear; top to bottom; or left to right when facing the equipment wiring access area.

F. GROUNDING: All equipment, raceways, service neutrals, etc., shall be grounded. Service conduits and conduits entering and leaving service switches shall be grounded with grounding type bushings complete with lugs. Bond each bushing by means of copper connections to neutral conductor and bar or lug. Ground rods shall be 5/8" X 10' - 0" copper clad sectional, extendable solid rods. They shall be installed with top 12" below finished grade. Resistance to ground shall not exceed 25 ohms. Multiple sections may be required to meet this resistance. Provide a separate equipment-grounding conductor in each branch circuit. Equipment grounding conductor shall have a green colored insulation and shall be sized in accordance with Table 250-95 of the NEC. The grounding electrode conductor shall be sized in accordance with Table 250-94 of the NEC.

G. INSTALLATION: An approved lubricant non-injurious to the conductor insulation shall be used where necessary for pulling conductors into raceways.

1.06 DEVICES:

A. Furnish and install all wiring devices as indicated on the Drawings and as required for a complete electrical system.

B. WALL SWITCHES: Switches shall be of specification grade, totally enclosed tumbler type with bodies constructed of phonetic compound. Wiring terminals shall be of screw or solder less pressure type having a suitable conductor-release arrangement. Switches shall be rated 20 amps, 125-277 volts, for use on alternating current only unless otherwise indicated.

C. RECEPTACLES: All duplex receptacles shall be provided with third grounded pole and shall be of specification grade. Receptacles shall be capable of receiving a two-wire parallel-bladed cap or three-pole cap. The third pole shall be connected to the metal mounting yoke. Receptacles shall be rated 20 amperes, 125 volts. Special purpose and hospital grade receptacles shall be located as indicated on drawings. Each shall be of top specification grade, of proper NEMA configuration for equipment, served, and equipped with proper cap completely installed.

F. DEVICE PLATES: Plates shall be provided for all outlets and fittings to suit the devices installed. Plates will be high-impact smooth nylon type, jumbo in size, ivory in color and red for hospital grade receptacles. Screws shall be of metal with counter-sunk heads. Plates shall be installed with all four edges in continuous contact with finished wall surfaces without the use of mats or similar devices. Plaster fillings will not be permitted. Plates shall be installed with an alignment tolerance of 1/16". The use of section-type device plates will not be permitted. Plates installed in wet locations shall be gasket. Plates used on exterior boxes shall be cast metal having round or beveled edges.

1.07 DEVICE LOCATIONS:

A. OUTLET LOCATION: The approximate location of all outlets is indicated on the Drawings as diagrammatic only. The Engineer shall determine the exact location of all outlets and outlets may be moved before rough-in to a distance of 10 feet from the position indicated without extra charge by the Contractor. Unless otherwise shown or directed, the outlet boxes shall be located with centerlines at elevations above the finished floor line or below ceiling lines as follows.
   1. General Lighting Switches - 48"
   2. Wall and Convenience Outlets - 18" from floor and 36-42" in desk areas
   3. Safety Switches (Max. to Handle) - 72"
   4. Panel boards and Electronic Control Panels - Max. to Top - 72"

1.08 EQUIPMENT SUPPORTS:

A. The Contractor shall furnish and install all necessary supports for properly mounting all electrical equipment and raceways. Such supports shall be fabricated and installed in a neat and workmanlike manner, and care shall be taken so that at no time shall any portion of the building structure be overloaded nor weakened in any manner. All structural steel furnished shall be standard shapes and sizes and shall be free from rust and/or scale and shall have one shop coat of lead and oil paint thereon when delivered to the job site. All interior steel shall be firmly and rigidly welded or bolted in place. The Contractor may use prefabricated structural systems manufactured by Kindrof Company, Unistrut Products Company, or Powerstrut, Inc., for the support of raceways and/or equipment. The Contractor shall be fully responsible for the proper sizing and assembling of such systems, if used to adequately and rigidly support raceways and/or equipment mounted thereon. It shall be the responsibility of the Contractor to select bolts of adequate strength for the service required. Lock washers shall be installed under all nuts, which bear on metal. Fastenings for securing conduit runs, boxes, light apparatus, etc., shall be bolts, beam clamps, or velocity driven studs on steel work; lag bolts with expansion shields, velocity driven studs, or inserts on concrete; toggle bolts on hollow tile or concrete block. Holes for lead expansion shields shall be drilled in solid brick or concrete and, where necessary, holes around it shall be neatly cemented after bolts are in place.

1.09 MOTOR CONNECTIONS:

A. All motors shall be connected to the conduit system by means of a short section (18" minimum) of flexible conduit unless otherwise noted. For motor connections, the Contractor shall furnish and install the grounding conductor inside the flexible section. Terminate the ground conductor by means of a solder less lug and a bolt through a hole to be drilled in the sidewall of the condulet. Risers from feeders on ceiling to individual motors on/or close to floor shall be firmly fastened at lower end and controls or protective apparatus shall be as shown on Plans. If not shown on Plans, conductor shall be as recommended by the manufacturer of the apparatus or as required by the NEC.
   1. Provide permanent engraved plastic nameplates, white letters on black field, permanently attached to equipment as follows:

1. Electronic Contol Panels	Name of Panel
2. Power Panels	Name of Panels
Each Branch Circuit	Name of Load
3. Safety Switch	Name of Load
4. Special Purpose Outlets	Position Breaker in Panel board

B. Provide a complete typewritten directory under transparent plastic cover inside of each panel door.

C. Provide cover plate with resetting instructions on each thermal trip switch.
D. Leave all electrical equipment, including fixtures, free of dust, plaster, paint spots, etc.

1.11 INSPECTION AND TESTS:

A. The complete job will be, during and/or after construction, subject to supervision of the Engineer. The Engineer or his designated representative as necessary to maintain compliance with the contract requirements shall conduct inspections.
B. Prior to acceptance by the Owner/Engineer, the Contractor shall conduct and record insulation tests of all feeder and motor branch circuits. The insulation testing shall be accomplished utilizing a meg-ohm meter and complying with minimum requirements of the NEC. The Engineer or his designated representative shall witness verification of test results.

END OF SECTION

SECTION 16200
RACEWAYS

PART 1 - GENERAL

1.01 DESCRIPTION:

A. Raceways indicated on Drawings and specified herein shall be complete in all respects including all necessary and incidental fittings, hangers and appurtenances required for a complete installation.

B. Minimum size of raceways shall be 3/4".

PART 2 - PRODUCTS

2.01 RIGID CONDUIT:

A. Hot-dipped galvanized rigid steel conduit (GRC) in all sizes may be used throughout project without regard to location or application. Any portion of a raceway using galvanized rigid conduit shall not be joined with IMC, EMT, or PVC. Refer to Article 346 NEC for further restrictions.

B. Conduit shall be galvanized on interior and where embedded in concrete or earth apply two coats asphaltum.

2.02 INTERMEDIATE METALLIC CONDUIT:

A. Intermediate metallic conduit (IMC) in all sizes may be used throughout project without regard to location or application, except that IMC shall not be used below grade, and shall not be cast in concrete. Refer to Article 345 NEC for further restrictions.

B. Electrical metallic tubing (EMT) may be used only for indoor applications in dry locations and shall not be embedded in concrete, earth or run exposed in wet locations.

2.03 RIGID NON-METALLIC CONDUIT

2. Rigid non-metallic conduit, Schedule 40 or 80 PVC, shall be permitted below grade as allowed by the NEC. Galvanized conduit (GRC) shall be used to penetrate finished grade or concrete slab. All exterior exposed conduits shall be GRC or Schedule 80 PVC.

2.04 FLEXIBLE METALLIC CONDUIT:

A. In damp or wet locations, flexible metallic conduit shall be of the "sealtite" type and shall be UL approved installed with proper connectors to fit the condition encountered.

B. In dry locations, flexible galvanized conduit (greenfield) shall be installed. Do not use "BX" in any location.

B. Flexible conduit lengths shall not exceed 60 inches for motor connections and/or recessed lighting unless otherwise specified.

2.05 WIREMOLD RACEWAY, OUTLET BOXES AND MULTI-CHANNEL RACEWAY

A. Wiremold type raceway system, multi-channel raceway, outlet boxes and telecommunication-data-power poles may be used for indoor applications where power, communication, and data circuits may be exposed at columns, concrete bracing and headers, and on exposed existing walls.

PART 3 - EXECUTION

3.01 LAYOUT:

A. Plans are diagrammatic and judgment shall be exercised to install electrical work in a practical manner to function properly and to fit building construction and finish. Items not shown or specified which are required to produce a complete, operative and finished system shall be provided.

B. Cooperate with others in laying out work so that this phase of the work will properly fit the building and other Contractors requirements. Exact location of various outlets shall be determined from dimensions on general construction drawings or as may be determined on the job. Do not scale drawings for exact location of any outlet. Locations and characteristics of equipment furnished under other sections of the contract shall be determined from other Contractor's shop drawings or layouts prior to locating outlets.

C. The right is reserved to change the location of any outlet improperly installed to fit equipment or finish and/or to change the exact location of any outlet before initial installation. Unless otherwise shown or directed, the outlet boxes shall be located with centerlines at elevations above finish floor lines or below ceiling lines as scheduled.

D. Raceways exposed to view will be run perpendicular or paralleled to the planes of the building structure. Where concealed in or below grade construction, raceways will take the most direct route between exit points. Where concealed above finished ceilings and in attic voids conduits may take the most direct route between points of connection. Raceways exposed on the building exterior shall be painted to match the exterior color.

3.02 INSTALLATION:

A. Where several conduits are run together, they shall be neatly paralleled with concentric and true radii. All bends shall be true and even without kinks or flats. Seal the exposed ends of conduits during construction to prevent the entry of foreign materials. Clean and dry all conduits before installing conductors.

B. All empty conduits shall have a nylon pull cord (not nylon jet line) installed. This pull cord shall be free from knots and splices from box to box. Provide labeled tags on the pull cord to identify the location of each end.

C. Raceway systems shall be concealed in new construction wherever practical, and in all instances in above ceiling.

D. Conduits shall terminate with bushings of solid insulating plastic material utilizing two lock nuts where lock nuts are permitted. Where lock nuts are not permitted, conduit shall terminate with threaded hub connections equal to "Scru-tite". If it is not possible to install two lock nuts, then OZ Type B or equal insulated bushings shall be utilized with one lock nut.

E. EMT crimp type connectors shall be installed with two opposing operations of the crimping tool to assure electrical continuity.

F. Where conduits are stubbed up from the floor or slab and are not mechanically bonded to the terminal enclosure, then OZ type BL or equal insulated grounded bushings shall be utilized and grounded as specified hereinafter. Threads on steel conduit shall be protected with approved corrosion resistant conductive compound.

G. At all connections to equipment, unions, or flanges shall be utilized to facilitate maintenance, repair, or replacement. Flexible connection shall be utilized as specified hereinafter.

H. Where raceway systems join equipment of dissimilar metals, they shall be made with fittings specially approved for the application.

I. Conduits installed in earth shall be buried a minimum of 24" to top below grade.

3.03 FLEXIBLE CONDUIT INSTALLATION:

A. Flexible conduit shall be used for all equipment connections where the equipment is on a sliding or adjustable base or where mounted of vibration isolators.

B. When flexible connections are utilized separate grounding conductors shall be installed within the raceway or a separate bonding conductor shall be external in accordance with Article 250 NEC - Grounding.

C. Use not to exceed five (5) feet of flexible metal conduit for connections to motors and/or recessed light fixtures unless otherwise specified herein.

D. Flexible connections subject to moisture under normal conditions or where specifically indicated or noted shall be liquid tight with proper liquid tight fittings.

END OF SECTION

SECTION 16250
GROUNDING

PART 1 - GENERAL

1.1 GENERAL.

Ground all equipment, systems, structures, etc., per the latest edition of the National Eiectrical Code (NEC).

PART 2 - PRODUCTS

2.1 Use mechanical bolted connections in dry locations that are accessible.

2.2 Use exothermic welds in wet locations and locations that will be inaccessible at the end of construction.

2.3 Ground rods shall be UL listed 3/4" x 10' copper-clad steel ground rods with a minimum copper cladding thickness of 10 mils.

PART 3 - EXECUTION

3.1 Ground rods shall be installed with their tops no less than 6" below grade.

3.2 Bond ground connections to metal raceways at each end of the conduit run. Provide grounding bushings where required by the NEC. Where cable trays are used, bond the ground conductor to each section and fitting of the tray.

3.3 Provide all circuits with an equipment grounding conductor sized per the NEC, or as shown on the drawings. Circuitry shown on drawings does not include the required equipment grounding conductor. Where multiple circuits are run with a common neutral, only one equipment grounding conductor is needed. The equipment grounding conductor shall be furnished with green insulation for conductors #8 AWG and smaller; where larger than #8, the equipment grounding conductor shall be taped green for its entire exposed length.

3.4 The grounding electrode conductor(s) shall be bare or shall be colored green for its entire exposed length.

3.5 Individual ground conductors shall be installed in PVC conduit sized per the NEC.

3.6 Provide receptacles, luminaires, and other devices with a green conductor that bonds the receptacle grounding screw or pigtail, the outlet box grounding screw, and the equipment grounding conductor together.

3.7 Telephone, cable television, and other auxiliary systems shall be bonded to the electrical building service ground using a conductor no smaller than #6 AWG.

END OF SECTION

SECTION 16300
CONDUCTORS

PART 1 - GENERAL

1.01 DESCRIPTION:

Electrical conductors, cables and related items required to complete the work shall be provided as indicated on the Drawings and as described in the Specifications.

1.02 SUBMITTALS:

A. Submit all required data in accordance with the Submittals.

B. Submittals shall include, but not be limited to, the following:
   1. Conductor types and insulation.
   2. Manufacturer.
   3. Spec-Data Sheets.

C. All circuit wiring shall be color-coded by insulation covering as follows:
   Service Voltage and Feeders – 120/240-V, 3-W, 1-Phase
   Feeders and Equipment Circuits – 120/240-V, 3-W, 1-Phase
   Phase A - Black
   Phase B - Red
   Three-way and four-way travelers - Yellow
   Neutral - White
   Equipment Ground - Green

PART 2 - PRODUCTS

2.01 INSULATED CONDUCTORS (600 Volts):

A. Sizes shall be not less than indicated. Branch circuit conductors shall be not smaller than No. 12 AWG. Conductors for branch circuits of 120 volts more than 100' long from panel to load center, shall be No. 10 AWG. Class 1 remote control and signal-circuit conductors shall be not less than No. 14 AWG Class 2 low-energy remote-control and signal circuit conductors shall be not less than No. 16 AWG. All conductors to be stranded annealed copper rated 600 volts.

B. Insulation shall be type THW, THWN, THHN, or XHHN. Do not mix insulation types in the same raceway or on the same circuit. Insulation shall be of a solid color for color-coding as specified hereinafter on conductors # 10 and smaller. On #8 and larger, all conductor insulations shall be solid black, color identified with color banding at each outlet, junction and pull box.

2.02 CONNECTIONS (600 Volts):

A. Pigtail splices will be permitted only on conductors #10 AWG and smaller and shall be made with a crimp cap, equal to Buchanan, applied with a crimping tool or "Scotlok" connectors or equal.

B. Straight splices #8 and larger shall be made with pressure tool applied compression type splices.

C. Lugs shall be crimp-type equal to "Burndy". A hydraulic crimping tool will be used for crimp connections and all sizes #4 AWG and larger.

D. Split bolt connectors will not be permitted.

E. All splices and taps shall be insulated with at least three layers of half-lapped Scotch #88 electrical tape or equal.

PART 3 - EXECUTION

3.01 INSTALLATION:

A. Only approved commercially available wire pulling compounds shall be utilized for lubricants when installing conductors in raceways. Such lubricants are a requirement of these specifications when installing conductors #2 and larger.

B. Wire shall be pulled into raceways from pay-out reels or reels on which the wire was shipped. Wire furnished in coils in boxes shall be removed from the boxes and placed on reels. Wire shall not be fed from the interior of the coil through the holes cut in the side of the boxes.

END OF SECTION

SECTION 16400
POWER DISTRIBUTION EQUIPMENT

Part I - GENERAL

1.01 PANELBOARDS:

A. LIGHT AND POWER PANELBOARDS: Panel boards are scheduled on the drawings. Panel boards shall be Square D Type NQOD, ITE-Siemens Type CDP-7, or prior approved equal. Panel boards shall be circuit breaker type for 120/240-Volts, 3-Wire, 1-Phase complete with breakers as per schedules. Panel boards shall be dead front construction complete with bolt- on branch breakers, pressure terminals, copper busses of ratings scheduled, neutral bar, ground bus, code gauge steel NEMA-3R enclosure with door and keyed lock. Panel boards shall mount flush or surface as scheduled. Provide a typewritten schedule inside door. Panel board shall have minimum interrupting rating of 22,000 amperes RMS symmetrical.

1.03 METER SOCKET: Install 100-Amp, 120/240-Volt, 3-Wire, 1-Phase, NEMA-3R rated meter sockets equal to Milbank at site locations requiring metered services and coordinate installation and service connections with Mississippi Power Company.

1.04 SAFETY SWITCHES (120/240-V), 3-Wire, 1-Phase:

A. Safety switches shall be furnished and installed in accordance with the following requirements:
   1. Type HD as defined by NEMA and shall be of voltage rating as required.
   2. Horsepower rated in accordance with "fusetron" fuses on motor circuits.
   3. Enclosures: NEMA-3R outdoors, NEMA-1 indoors.
   4. Safety Switches shall be Square D, ITE, General Electric or of the same manufacturer as major power distribution components.
   5. All fused switches shall be fused with Bussman Fusetron dual element type fuses as appropriate to the circuit voltage with size fuse appropriate for motor load.

Part 2 - PRODUCTS

2.01 STARTER, CONTROLS, AND DISCONNECTS:

A. All disconnect switches shall be standard type HP rated, sized to the load and fused so as to provide running over current protection. All fuses shall be dual-element fusetron or equal. Use NEMA type 3R switches for all outside installations.

B. Supply all motor controls and starters unless furnished with the equipment. Furnish additional interlocks for the starters as required to proper connect the starter as called for in the control wiring diagrams.

C. Push buttons, limit switches, and other control devices generally will be furnished by installing trade unless specifically called for in this section of the specifications.

D. Starters for all motors shall be furnished with three overload devices, one for each ungrounded leg.

Part 3 - EXECUTION

A. Motors shall be furnished by the trade supplying the motor driven equipment. Review the requirements of other sections of these specifications to determine electrical requirements to be provided under this section. Generally, motors will be installed by supplying trade and the necessary electrical power supply connections will be a part of the requirements of this Division.

B. Furnish and install all power wiring required for the entire project as a part of this Division. Control wiring is herein defined to embrace temperature control, interlock sequencing, and initiating controls, and other controls as may be required. Refer to other sections of these specifications and the drawings to determine the extent of such other wiring as may be required. (See Division 15).

END OF SECTION

SECTION 16600
ELECTRICAL SERVICE

1.01 GENERAL:

A. The electric service to the Mass Notification System sites shall be provided by Southern Pine E.P.A. New underground and metered services will be required at select sites and shall be provided from MSN pole to the nearest power source pole as to be designated by Southern Pine E.P.A.

B. The electrical contractor will be required to include in the bid the costs for any contribution to aid construction required by the Mississippi Power Company for the modifications to the existing services and installation and connection of new underground services. Electrical contractor must also coordinate connection or relocation of service to main distribution secondary metering equipment.

1.02 VOLTAGE:

A. The service voltages shall be 120/240-Volt, 3-Wire, 1-Phase.

1.03 ELECTRIC METER AND METER SOCKET:

A. Mississippi Power Company will provide new meters as sites requiring new services and the contractor shall coordinate any relocation, new connections or any modifications required.

1.04 GROUNDING:

A. Ground the electrical service in accordance with Article 250 of the National Electrical Code. Ground each panel individually or provide ground wire with feeder from Main Panel.

1.05 COORDINATION WITH OWNER/ENGINEER:

A. Contractor shall provide to Owner and Engineer a calendar schedule of work to be performed. This work schedule shall be prepared after investigation of scheduling and needs, equipment delivery dates and work of other trades.

END OF SERVICE

SECTION 16650
OVERHEAD DISTRIBUTION SYSTEM

PART 1 – GENERAL PRODUCTS

A. WOOD POLES:

1. Wood poles shall be Southem Pine Kiln dried to a 25% moisture content and treated with water-borne preservatives. Poles shall be of the length and class as indicated on the Drawings. Poles shall comply with the requirements of ANSI 05.1.

2. Poles shall be selected for maximum straightness, minimum sweeps and short crooks. The Engineer and Owner reserves the right to reject any pole not deemed suitable for the installation and service requirement.

3. Treatment of poles shall comply with the requirements of AWPA Standard C1. Preservative shall be water-borne Chromated Copper Arsenate (CCA) type C, 0.6 PCF (oxide) conforming to AWPA Standard P5 or latest acceptable preservative acceptable per the EPA and industry standards. Sapwood penetration of 100% shall be obtained.

PART 2 – INSTALLATION AND EXECUTION

A. Install utility services in accordance with utility company standards and requirements.

B. Install equipment in accordance with manufacturer's instructions.

C. Ground the electrical service in accordance with NFPA 70, National Electrical Code, Article 250.

D. Set poles in straight line. Place curved poles with curvature in line with lead pole. Maintain an even grade.

E. Dig setting holes large enough to permit use of tampers to full depth. Place earth in maximum 6 inch layers and pack to 45 percent density.

F. Rake poles located at comers, angles, and dead ends so that poles are vertical after line installation.

G. Do not install poles along the edge of cuts and embankments or where soil may be washed out.

H. Identify each pole by MSN Site Number using aluminum marker stamped with characters 2-1/2 inches high minimum. Locate to provide maximum visibility from roadway and fasten with aluminum nails.

I. Pole setting depths shall be as follows:

Pole Length	Setting Depth
45'	6'-6"
50'	7'-0"
55'	7'-6"

A. CONCRETE POLES

A. Mass Notification System poles furnished and installed on this project shall be pre-stressed spun concrete designed for direct burial applications. There is only one pole site requiring a 55' height with class 2 poles.

B. Poles shall be prestressed concrete poles, manufactured by the centrifugal spinning process. Poles shall be round in cross section with a hollow center. Poles will be of single piece construction.

C. Concrete mix shall be designed to achieve a minimum 28-day compressive strength of 12,000 psi.

D. Pre-stressing forces shall be limited to 65% of the ultimate yield strength of the pre-stressing strand. Pre-stressing steel reinforcement shall conform to uncoated 7-wire, stress-relieved strand including low relaxation and shall be limited to 1/2" diameter.

E Steel spiral reinforcement shall not be less than 0.1875-inch diameter. The pitch of the spiral steel shall not be greater than 3.2 inches or the radius of the pole, whichever is less.

F. Forms shall be designed to provide a minimum concrete cover of 3/4" over the spiral steel.

G. Standard lengths of 55' with minimum class 2 shall provided to achieve mounting heights required for the Mass Notification System and six siren arrays.

H. Poles shall be predrilled for equipment and hardware mounting as shown on the Drawings and as required by the MNS equipment supplier. All exposed power, wiring, communications and control wiring may be routed and exposed within the core of the concrete pole.

J. Poles shall be designed such that the deflection does not exceed 1.1% of the free height of the pole at its maximum EPA under a wind loading equivalent 120-MPH ultimate wind speed, plus a 1.3 gust factor.

END OF SECTION

SECTION 16800
MECHANICAL SYSTEM WIRING

1.01 GENERAL

A. Unless otherwise mentioned herein, the Electrical Contractor shall be responsible for all power wiring of mechanical system. This Contractor is cautioned to familiarize himself with the Mechanical Specification regarding the Electrical Work. Motors shall be installed and mechanically connected by the Mechanical Contractor and electrically connected by the Electrical Contractor. Mechanical Contractor shall be responsible for furnishing to this Contractor all necessary name plate data, equipment power requirements, wiring diagrams, etc., pertaining to the electrical phases of the mechanical installation. Where fuses only are permitted, furnish fusible disconnect with fuse size required by manufacturer of equipment. Obtain written approval of Division 15 contractor of over current size before energizing equipment.

1.02 CONTROL WIRING:

A. Control wiring shall be furnished under DIVISION 15 MECHANICALWORK: Motor Starter and Motor Contactors, related to Mechanical Work, to be mounted in the equipment cabinet or at the mechanical equipment shall be supplied to the Electrical Contractor. All wiring internal of motor control centers, motor starter panel boards, etc., shall be the responsibility of the Electrical Contractor. The Mechanical Contractor shall provide all mechanical equipment starters and motor contactors and the Electrical Contractor shall install and connect the equipment components. Electrical contractor shall provide 120-volt service or as required to the mechanical system control panels for operation of control devices.

END OF SECTION

SECTION 16715
TECHNICAL SPECIFICATIONS
EMERGENCY OUTDOORS VOICE & SIREN WARNING AND AREA WIDE MASS NOTIFICATION SYSTEM

SECTION 1- GENERAL

1. SCOPE:

The purpose of these specifications is to outline the minimum acceptable specifications for an Electronic Warning and Area Wide Mass Notification System (MNS). Each MNS Equipment Supplier and Contractor will provide a quote for (7) 125 dBC @ 100' omni-directional, non-rotating, electronic, sirene-warning system, as described in the specifications listed below. The Equipment Supplier and Contractor's bid shall include: speaker arrays, speaker cable, warning system controllers, warning system's radio controls, antennas and antenna cables, encoder(s), treated wood poles and pole mounting brackets, lightning arrestors, surge protection, batteries and installation of all equipment, in accordance to the installation specifications provided within this package. (NOTE: Voice warning capability is not required).

All system components furnished for this project shall be new, unused products currently listed in the vendor's latest price sheet. The model being proposed must have been in operations in the continental United States for a minimum of five (5) years. No product model that has less than a five year history will be accepted. New series or new models that are improved versions of previous series or models will be accepted, providing the previous models can be shown to have been used in similar applications. All remote warning systems, their controls, and encoders shall be current standard and advertised models.

The Mass Notification System shall be equal to Whelen WSP-2906 Series High Powered Siren Warning System and must be compatible with and capable of communicating with the existing MNS Central Control Equipment. No new control equipment will be allowed.

2. QUALIFICATIONS OF EQUIPMENT SUPPLIER AND CONTRACTOR BIDDER:

Equipment Supplier and MNS Contractor must possess a FCC license. Each MNS Equipment Supplier and Contractor must be an equipment manufacturer authorized sales and service center for the siren warning equipment for the project area and must have a staff office with certified technicians located within 100 miles radius of the project location. MNS equipment supplier with certified technicians must be capable of providing any required service within four hours after notification by the owner. Installation must be included. The sirens will be installed on 55' class 1 treated wood pole provided and installed by the Contractor. All siren speaker and control cable must be installed in rigid steel and conduit. For security purposes and because of the sensitive nature of the county's radio system and dispatch console, the Contractor must employ full time Motorola factory trained radio technicians. The primary Contractor is not allowed to use sub contractors to perform service on the activation encoders; therefore, all installation work performed on the activation encoder and connecting the encoder to the customer's radio base station must be performed by the bidder's FCC licensed employees.

SECTION 2 - GENERAL PUBLIC WARNING SYSTEM SPECIFICATIONS:

1. PUBLIC AREA WIDE MASS NOTIFICATION SYSTEM

1.1 The Public Warning System (herein shall be known as "The System") will utilize electronic, high siren arrays and warning tones. The System will consist of non-rotating, omni-directional siren system that is capable of providing warning tones throughout 360 degrees. The System shall use a two-way radio controlled system that will provide positive feedback for silently testing each warning system.

1.2 Each vendor must perform an acoustic study to determine the number of alerting systems required. The study must indicate the average ambient noise for downtown areas, tourist areas, major business districts and areas near major highways and airports. Coverage must provide a minimum of 10dBC above these ambient noise levels. Each System's coverage must be estimated in accordance to FEMA's Guideline for Outdoor Warning System CPG 1-17, using the sound attenuation formula of 10dB loss per distance doubled. To ensure that the model(s) of each warning system being used will provide adequate sound pressure levels required, each bidder must provide the decibel level at 100' of each warning system being bid. Using the attenuation formula of 10dB loss per distance doubled, the design coverage shall not extend beyond a 70 dBC perimeter.

1.3 Each bidder shall submit, along with their proposal, a list of equipment by model or brand name that is being bid.

1.4 All system components furnished for this project shall be new products currently listed in the vendor's latest price sheet. All remote warning systems, their controls, and encoders shall be current standard and advertised models.

1.5 Only bids for electronic siren array warning systems will be acceptable. Any bid that includes an alternate for warning systems not capable of delivering both warning tones and voice communications will be deemed non-compliant and will be disqualified. The fact that a manufacturer chooses not to produce equipment to meet these specifications, providing the above criteria are met, will not be sufficient cause to adjudge these specifications as restrictive.

1.6 Any exceptions to these specifications must be clearly stated point-by-point on a separate attached form. Failure to provide this information will disqualify the bidder.

2.0 WARRANTY:

2.1 Warranty of the system shall be a minimum of 24 months for the warning system's components mounted on the pole and encoding equipment. The repair of the warranted parts shall be done at the manufacturer's factory. The cost of repairing these parts shall be included in the 24-month warranty. This excludes any labor cost for removing the defective part, from the warning system. Other items submitted, but not manufactured by the bidder, such as computers and printers, wherein the warranty is not included in the factory's warranty must be indicated.

2.2 Additionally, an extended warranty agreement for a period of three years, after the 24 month warranty expires, must include a flat rate repair of $75.00 per module for all modules, manufactured by the warning system's manufacturer, located inside the warning system's control cabinets and encoders provided by the bidder. The extended period does not apply to items not manufactured by the warning system manufacture. However, those items must be named. The extended period includes speaker drivers. The flat rate fee must be stated.

3.0 TECHNICAL SUPPORT:

3.1 The bidder must be an authorized sales and service center for the products being bid. The bidder must have FCC licensed technicians and have a response time of not more than one hour.

4.0 SHIPPING:

4.1 FOB will be manufacturer.

5.0 FREIGHT:

5.1 Vendor shall pay freight.

6.0 SPEAKER ARRAY:

6.1 The speaker array shall consist of six multiple omni-directional speaker cells. Each omni-directional speaker cell shall be comprised on only one (1) 400-watt speaker driver. The speaker array must be permanently fixed for horizontal sound dispersion throughout the speaker array's 360 degrees of coverage. Without exception, the speaker array MUST be a modular design. Without exception, the use of fixed directional speakers that are designed to permit any of the array's speakers or horns to be tilted up or down, in a vertical position, or move left or right in a horizontal fashion that use welds, bolts, adhesives or other means to hold the speaker array in a horizontal plane will not be accepted. The use of multiple stacked flared speaker horns, or stacked speaker arrays that require more than one (1) speaker driver per speaker cell will not be accepted. The speaker array must be able to deliver the manufacturer's advertised decibel level without more than a 1 dB loss throughout the speaker array's 360° sound projection.

6.2 Speaker signal performance shall be based upon utilizing the alert warning tone, a single tone generated at a frequency not to exceed 500 Hz.

6.3 Measurement of the sound acoustical performance output of the speaker/siren system shall not vary +/-1dBC throughout the 360 degree coverage.

6.4 The six sirens array must be rated at a minimum of 125dBC at 100' range, estimated 70dB at 4,800' range and estimated 60dB at 9,600' range (Estimated 70dBC perimeter is based on Federal Emergency Management Agency's (FEMA) -10dB per distance doubled path method)

6.5 The electrical path between the speaker system's power amplifiers and speaker drivers will be hardwired. Each 400-watt speaker driver will be connected to a 400-watt power amplifier. Only one speaker driver per power amplifier will be accepted. Each power amplifier must be capable of producing 400 watts minimum output rating. Each 400-watt speaker driver will be connected to one 400-watt power amplifier. In the event of a power amplifier failure, the loss of a single power amplifier will not affect more than one speaker driver and will not reduce the sound level output by more than 3 dBC. A dedicated pair of wires shall wire each speaker driver to its own power amplifier. These wiring pairs shall be twisted, 14awg, coded red and black and each wire shall be numbered. The use of common grounds is prohibited. A minimum of 50' of speaker and control cable must be provided, for each warning system.

6.6 The speaker array will be pre-wired at the warning system manufacturer's facility prior to shipping.

6.7 The speaker array shall be wind tunnel tested and capable of withstanding speeds up to 120 mph.

6.8 The speaker array shall be manufactured in a manner that will endure a minimum of 30 years of ultraviolet rays without the need for painting or other service requirement.

7.0 CONTROL CABINET:

7.1 The warning system case for the speaker systems shall be a multi-compartment assembly consisting of separate cabinets seam-welded together. The warning system case assembly shall be furnished in a natural finish aluminum material. The use of fiberglass or other non-metallic material will not be accepted. To minimize future maintenance, the speaker array and the voice/warning system's electronic cabinet shall be manufactured from materials that have not been need painted nor will ever need painting. The unpainted material must be capable of withstanding the environmental conditions of The **City/County.**

7.2 The warning system case assembly shall be similar to a NEMA 4 type case assembly providing a raised rolled lip around the entrance of each compartment, removable hinged doors with gaskets for each compartment that is secured by a retaining mechanism and a provision for a hasp type lock.

7.3 All system electronics will be modular and installed on the hinged panel swing out, for service. For ease of troubleshooting, all modules may be serviced or inspected by opening the service panel without disconnecting any modules from operation.

7.4 All wiring and conduit entrance to the control cabinet assembly will be via the bottom of the cabinet. All wiring connections between the compartments of the control cabinet shall have sealed fitting to prevent fumes or gases from the battery compartment entering the electronics compartment. No conduit connection between the battery compartment and the warning system's control cabinet is allowed unless the conduit is "Factory Sealed."

7.5 The battery compartment(s) shall be vented. Vents for the battery compartment(s) shall be screened.

7.6 A lightning arrestor must be provided for each warning system. Specifications of the arrestor are:

Maximum current: 60,000 Amps
Maximum energy: 2,000 Joules per line
Maximum number of surges: Unlimited
Response time one milliamp test 5 Nanoseconds
Reference Model, Delta Lightning Arrestor Model LA 302.

8.0 BATTERY CHARGER:

8.1 The battery charger will consist of two separately functioning 5-amp chargers working parallel to provide a maximum of 10-amps output. Under normal working conditions, to minimize the re-charge time, the battery charging system MUST provide a minimum output of 10-amps. Should one of the 5-amp chargers fail, the separately functioning 5-amp charger will be capable of charging all of the siren's batteries. Without exception, a single 5-amp or a single 10-amp battery charger will NOT be accepted. Loss of a single battery charger will not affect the ability of the battery to be charged.

8.2 The battery charger(s) for the remote warning system must be temperature compensated and voltage regulated, of a modular design and performs as follows:

-Input: 120 VAC fused at 7 amps.
-Output: 27-31 VDC, at 10 amps.

8.3 The battery charger shall incorporate line surge suppression facilities.

9.0 BATTERY SUPPLY:

9.1 To minimize future maintenance expense, each voice/warning system will require no more than four (4) 115amp/hr batteries to meet the operational guidelines of these specifications. Bidders must provide a copy of the warning system's technical manual which describes the number of batteries required. to provide a minimum of 30 minutes of run time, in the absence of electrical power. Failure to provide the proper information and/or failure to bid the proper number of batteries will deem the bid as "non-compliant" and the bidder will be disqualified.

10.0 MICROPROCESSOR CONTROLLER:

10.1 The microprocessor-based controller shall perform the following:
-Process remote and local station activation inputs
-Control event timing (timing 0-10 minutes)
-Initiate tone generator
-Perform system diagnostics
-Process local and remote voice broadcast

10.2 The microprocessor controller shall have the following local controls:
Warning tone activation to include: WAIL, ATTACK (Fast wail), ALERT (Steady), HI/LOW, AIR HORN, WHOOP and a 5 SECOND TEST -Silent test tone activation

11.0 TONE GENERATOR:

11.1 The tone generator shall be an integral module within the microprocessor-based controller capable of generating the following warning signals:

TONE	FREQUENCY	SWEEP RATE
WAIL	410-675 Hz	4 sec/ 1 sec
ATTACK	410-490 Hz	1 sec/ 1 sec
ALERT	465 Hz	Steady
HI/LOW	465 / 650 Hz	.8 sec/ .8 sec
WHOOP	300-675 Hz	3 sec
AIR HORN	465 / 650	Modulated/ 1.6 sec

11.2 The tone generator will be capable of generating an inaudible tone of at least 20 kHz for the purpose of testing the speaker system and its respective speaker drivers without disturbing the public.

11.3 In addition to the six standard warning tones, each warning system shall include six optional and distinctively different warning tones. These optional tones shall be an integral part of the warning system. The City can choose which set of warning tones they wish to use by using specific hardware and software device that will allow each warning system to be reconfigured, at the warning system's site. The requirements of this hardware & software for reconfiguration are discussed in 18.0 of these specifications.

12.0 SYSTEM DIAGNOSTIC MONITORING FUNCTIONS:

12.1 The speaker system will produce an inaudible tone for the purpose of testing the speaker system without disturbing the public. The inaudible test shall be capable of being activated by local or radio command.

12.2 The radio activated silent test will cause an exercise of the warning system components and a system diagnostic routine, permitting the verification of the following conditions:
-AC Power at operating levels
-DC Power at operation levels
-Partial speaker driver/amplifier operation
-Full speaker driver/amplifier operation
Additional diagnostic status must be made available via radio frequency and shall include
-Signal-to-noise
-Activation Counter

12.3 The inaudible test must be capable of diagnosing each speaker driver and power amplifier. The silent test function must be capable of detecting the failure of a single speaker or power amplifier. Each warning system will report the results of the silent test back to the central control station.

12.4 The diagnostic MUST include a means to measure and report the siren's receive radio frequency signal. This value is important to ensure that each siren's radio receiver is performing properly.

13.0 SPEAKER SIGNAL PERFORMANCE:

13.1 Speaker signal performance shall be based upon utilizing the Alert warning tone. The frequency of the Alert tone shall not to exceed 500 Hz.

14.0 VOICE PERFORMANCE (NOT REQUIRED)

15.0 DECODER?ENCODER/SOFTWARE (Existing Whelen E2010 Central Station Control with E969 Encoder):

15.1 New MNS must be programmed to communicate with the existing control station equipment.

15.2 No new central control equipment will be allowed.

16.0 RADIO CONTROLS

16.1 The warning systems will be controlled via radio frequency. The radio control shall be capable of performing silent diagnostic testing on each warning system. The warning system shall report the status of the test and each activation back, via radio frequency, to the central control base station encoder.

16.2 The radio receiver for the warning system shall be incorporated as a module, within the microprocessor controller. The warning system shall be equipped with a two to four watt state of the art transceiver. The City of Hattiesburg will provide the actual operating frequencies upon award of Contract.

RF LINK FREQUENCIES: (Narrowband with Tone Coded Squelch)
Base station transmit frequency: _____Mhz
Base station transmit tone squelch: _____hz
Warning System receive frequency: _____Mhz
Warning System receive tone squelch: _____hz
Warning System transmit frequency: _____Mhz
Warning System transmit tone squelch: _____hz

16.3 It is the intent of the City of Hattiesburg to activate, control, test, and monitor the proposed Mass Notification System and Emergency Warning System over the existing Police Dispatch Trunked Radio System. The sirens must be controlled with an integrated RTU/Radio platform which must be compatible and approved with the existing Trunked Radio System and provide a migration to future project platforms as the system expands. The radio control shall also be capable of performing silent diagnostic testing on each site location siren. The individual sirens shall report the status of the test and each activation back, via radio frequency, to the central activation site.

16.4 All hardware and software necessary for the stations to meet the system requirements shall be provided and installed in this project by the equipment supplier and Contractor.

16.5 The radio antenna shall be a 3dB omni-directional antenna. Also, a minimum of 35' of antenna cable shall be provided.

16.6 The City of Hattiesburg will ensure that a proper radio propagation exist at each warning system site.

SECTION 3 - INSTALLATION

1.0 INSTALLATION:

1.1 The warning system shall be mounted on a 55' Class 1 treated wood utility pole. The bidder will be responsible for providing the required pole, setting the pole, mounting all warning system components on the pole. The bidder will be required to provide a meter and weather head ready to accept 120VAC.

1.2 All wiring must be in rigid steel conduit.

1.3 The bidder must install the activation encoder. The installation must be performed by the bidder and the technician installing the activation encoder must be an FCC licensed technician.

1.6 Upon completion of the installation and prior to final acceptance, the Contractor and Certified Equipment Technician shall provide a factory trained certified instructor to conduct a minimum of eight hours of classes and onsite training instructing select City employees in the maintenance, troubleshooting, testing, operation, activation and programming of the furnished Mass Notification System equipment. Additional four hours or similar training will also be provided within six month and prior to the end of the project warranty as required by the Owner.

END OF SECTION

APPENDIX

CONSTRUCTION NOTES

SITE LOCATION DRAWINGS

ELECTRICAL DETAILS BY SITE

INSTALLATION INSTRUCTIONS

CONSTRUCTION NOTES FOR

CONSTRUCTION OF AREA WIDE MASS NOTIFICATION SYSTEM #6

LOCATED ON CLASSIC DRIVE

CITY OF HATTIESBURG MISSISSIPPI

General Requirements

1. This project involves the installation of an additional Area Wide Mass Notification System (Early Warning System) #6 to be located on Classic Drive (Country Club Estates Area) on the North side of the City of Hattiesburg Mississippi. This project consists of a Wide Area Mass Notification System using outdoor pole mounted speaker/horn clusters or speaker arrays, amplifiers, batteries, control unit, wireless communicators, central control stations with automatic control. The speaker array pole and system shall be strategically located to meet the performance requirements noted herein, to cover the area noted on the drawings.
2. MNS #6 will be the sixth MNS (five existing) and become part of the City Wide Emergency Warning System. Five previous MNS sites were installed in 2011. MNS #6 system and equipment must be equal to and in compliance the existing Whelen High Powered Voice and Siren System Model WPS2906 and must communicate and interface with the existing Whelen Central Station Control Encoder/Decoder and radio communication equipment provided at two locations. No additional Endoder/Decoder equipment will be allowed.
2. Contractor shall contact Mississippi One Call and Owner for the locations of all underground utilities for the additional site location with this project.
3. Contractor shall coordinate electrical service at designated site with Southern Pine EPA, Hattiesburg Operations. SPEPA POC is Mr. Rusty Blakeney at 601.264.0213.
4. Contractor shall include in the bid price any contribution amount required by SPEPA and any other Utility provider involved with this project for new overhead/underground electrical service or modifications to existing utility service.

Construction Requirements

1. Contractor shall provide and install an additional (MNS #6) complete and operable Area Wide Mass Notification System at the following site within the City limits of Hattiesburg (GPS Location identified on the drawings and any relocation will require Engineer approval):

    - Site #6 – Intersection of Classic Drive and North Beverly Hills Road (NW Corner) in Country Club Estates Area off HWY 49N. New underground electrical service from an existing City Water Booster Station and SPEPA metered service will be required.

2. Contractor shall install mass notification system on 55' class 2 pre-stressed concrete pole at the site location. The mass notification system shall be complete with AC power and protective equipment, weather proof electronic control and communication panel, six array siren/speaker mounted on pole top, antenna, communication cable, grounding, and mounting hardware.

3. Contractor shall comply with mass notification system manufacturer's installation requirements.
4. Contractor shall have flexibility in moving location of pole mounted MNS within 10' at the proposed site due to unforeseen issues but must coordinate any relocation with the Project Engineer.
5. Contractor shall coordinate underground and overhead electrical service requirements with SPEPA for designated site. Underground electrical and system electrical service shall involve the following:

    - Trenching and/or directional boring at a minimum of 24" BFG from existing metered service (120/240-Volt, 3-Phase for 15-HP Water System Booster Pump) and service pole or source to mass notification pole.
    - Provide, Install and Connect 3#8+#6G THWN Copper to the load side lugs of the existing 100-Amp, 3-Phase Disconnect or meter socket to avoid additional metered service
    - Install 30-Amp, 120/240-Volt, NEMA-3R fused type heavy duty disconnect mounted behind existing disconnect on back of existing galvanized rack (fused with 30-Amp time delay fuses)
    - Install 3#8+#8 THWN Copper in 1" Schedule 40 PVC conduit from base of power source to MNS pole and 1" Schedule 80 PVC conduit for exposed conduits up pole
    - Connect the 3#8+#8G THWN copper conductors in 1" PVC conduit from new disconnect to power terminals inside electronic cabinet. Flexible seal-tight conduit may be used for connections.
    - 1" GRS conduit from MNS electronic panel up pole to speaker/siren array with power and communication supply as required by manufacturer.
    - ¾" GRS conduit with coaxial communication cable from electronic panel up pole to communication antenna as required by manufacturer.
    - Install surge type lightning arrester and surge protection device (SPD) mounted on service at MNS electronic cabinet
    - #4 copper ground from bottom of speaker/siren array hardware down pole to 5/8" x 10' extendable type ground rods. Connect ground to power supply and to electronic panel. Multiple ground rods will be required to acquire less than 25-ohms grounding resistance.

6. This system shall be in compliance with and communicate with existing Central Station Control equipment located at the City of Hattiesburg Police Dispatch Center (primary) and at the Forrest County Emergency Management Center (back-up site). Either central control station can currently control the outdoor existing and all future Mass Notification Systems high power voice and siren systems by radio communication. Both stations currently use a graphic user interface to select individual or complete system speakers/sirens. Contractor and equipment supplier technician must program the existing central station control and encoder equipment for complete operation of the additional mass notification system site (MNS #6) for radio control at the following sites:

    - City of Hattiesburg Police Dispatch Center located at Edwards Street (Katie Avenue Entrance)
    - Forrest County Emergency Operations Center locate on HWY 11 South of Interstate-59

7. The Contractor and Manufacturers' Certified Technician shall provide the following services:
   - Provide the services of a qualified manufacturer's representative or technician certified in the installation and operation of the type of system being provided to supervise the installation, testing (including final testing), and adjustment of the system.
   - Provide serviceability of equipment such that an emergency response is no greater than four hours and a non-emergency response is no greater than twenty-four hours.
   - Upon completion of installation, the contractor shall complete performance testing of the mass notification system for compliance with specifications. Upon successful completion of performance testing, the contractor shall complete a witnessed acceptance test. Performance testing shall be spot-checked, and local representatives of the authority having jurisdiction shall witness acceptance testing.
   - Only personnel trained and qualified in the maintenance and repair of mass notification systems shall perform inspection, testing, and maintenance tasks. Unless specific manufacturer training is available for the mass notification system, personnel shall be considered qualified if they have achieved NICET Level II or Underwriters Laboratories, Inc. (UL) certification level for mass notification systems. Tasks shall be performed according to manufacturers' instructions.
   - The Contractor and MNS Manufacturer shall provide a factory-trained, qualified instructor to conduct training to base personnel designated by the Contracting Officer. Training shall include the maintenance, troubleshooting, operation, and programming of the furnished equipment. Training shall start after the system is functionally complete. Proposed training schedule shall be submitted for approval at least 10 working days prior to start date. A minimum of 16 hours of "hands on" initial training shall be provided with an additional 8 hour follow-up training within six months or prior to the one year warranty period.
9. The specific operating frequency shall be assigned by the City's Information Technology Manager in consultation with the Area Radio Frequency Coordinator upon award of Contract for this project.
10. The Wide Area Communicator power supply shall be provided with suitable transient protection that meets the requirements of ANSI C 62.41. The battery charger of the Wide Area Communicator shall be integral to the units or provided as a separate unit and shall be completely automatic, capable of recharging the batteries from full discharge to full charge within 48 hours. The battery package shall be capable of supplying all power requirements of the Area Communicator. Wide Area Communicator shall be connected to the MNS Wide Area Controller batteries. Those batteries shall provide sufficient power to operate the unit in a normal standby status for a minimum of 60 hours and be capable of transmitting an alarm signal at the end of the period. The units shall disconnect the standby batteries before the batteries are permanently damaged by excessive discharge.
11. Area Wide Mass Notification System shall be equal to Whelen WPS-2900-6 High Powered Voice and Siren System with six speaker array and electronic cabinet with acoustic performance SPL @ 100' = 125 dBC, estimated 70dB range @ 4,800' and estimated 60 dB range @ 9,600 ' and must be capable of communicating with the existing E2010 Central Control Stations and E969 Encoder as required. No new control and encoder/decoder equipment will be required or allowed.

END OF CONSTRUCTION NOTES

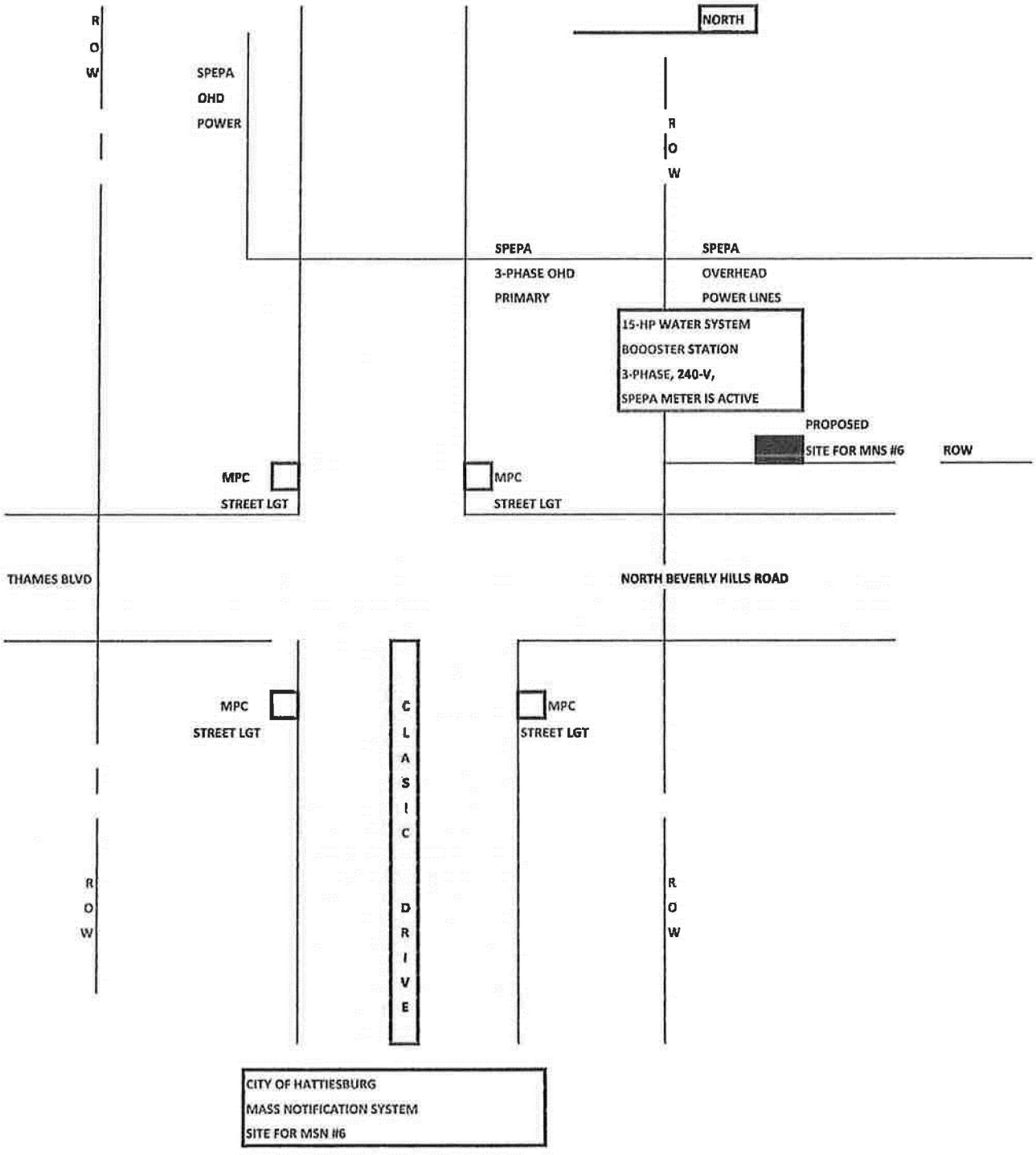
NORTH
ROW
SPEPA
OHD
POWER
ROW
SPEPA
3-PHASE OHD
PRIMARY
SPEPA
OVERHEAD
POWER LINES
15-HP WATER SYSTEM
BOOOSTER STATION
3-PHASE, 240-V,
SPEPA METER IS ACTIVE
PROPOSED
SITE FOR MNS #6
ROW
MPC
STREET LGT
MPC
STREET LGT
THAMES BLVD
NORTH BEVERLY HILLS ROAD
MPC
STREET LGT
CLASIC DRIVE
MPC
STREET LGT
ROW
ROW
CITY OF HATTIESBURG
MASS NOTIFICATION SYSTEM
SITE FOR MSN #6

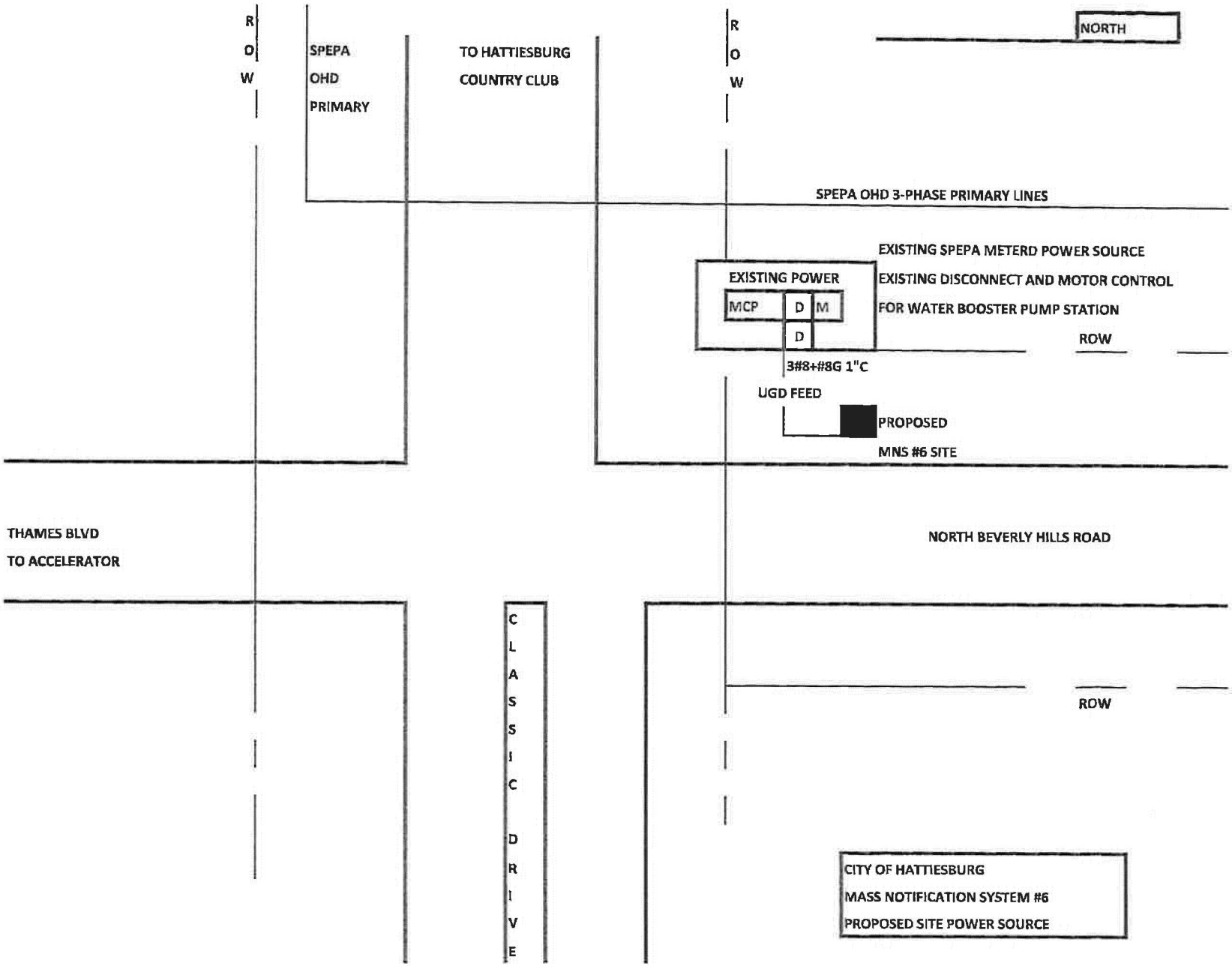
R
O
W
SPEPA
OHD
PRIMARY
TO HATTIESBURG
COUNTRY CLUB
R
O
W
NORTH
SPEPA OHD 3-PHASE PRIMARY LINES
EXISTING SPEPA METERD POWER SOURCE
EXISTING POWER
MCP
D
M
D
EXISTING DISCONNECT AND MOTOR CONTROL
FOR WATER BOOSTER PUMP STATION
ROW
3#8+#8G 1"C
UGD FEED
PROPOSED
MNS #6 SITE
THAMES BLVD
TO ACCELERATOR
NORTH BEVERLY HILLS ROAD
CLASSIC DRIVE
ROW
CITY OF HATTIESBURG
MASS NOTIFICATION SYSTEM #6
PROPOSED SITE POWER SOURCE

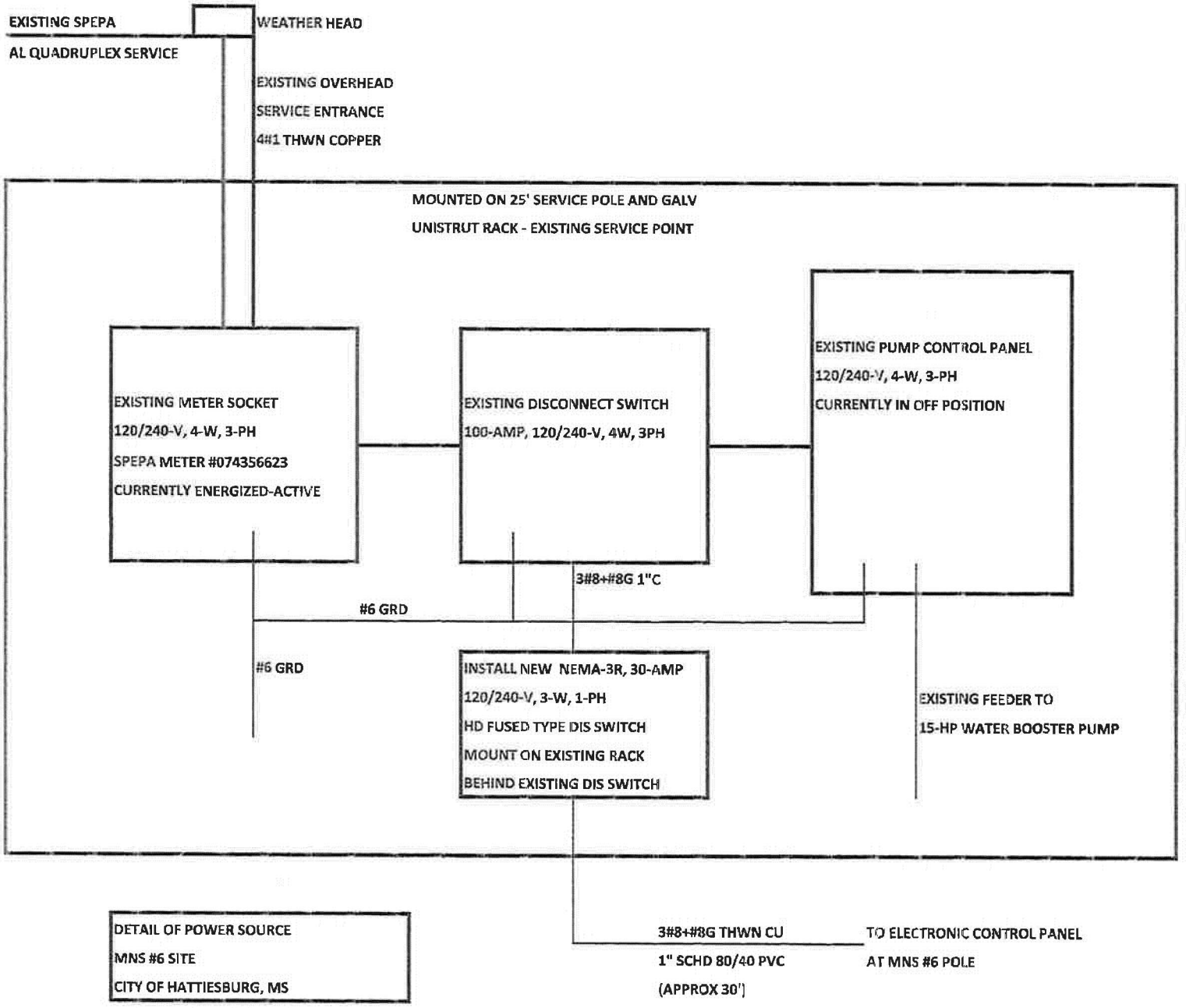
EXISTING SPEPA
AL QUADRUPLEX SERVICE
WEATHER HEAD
EXISTING OVERHEAD
SERVICE ENTRANCE
4#1 THWN COPPER
MOUNTED ON 25' SERVICE POLE AND GALV
UNISTRUT RACK - EXISTING SERVICE POINT
EXISTING METER SOCKET
120/240-V, 4-W, 3-PH
SPEPA METER #074356623
CURRENTLY ENERGIZED-ACTIVE
EXISTING DISCONNECT SWITCH
100-AMP, 120/240-V, 4W, 3PH
EXISTING PUMP CONTROL PANEL
120/240-V, 4-W, 3-PH
CURRENTLY IN OFF POSITION
3#8+#8G 1"C
#6 GRD
#6 GRD
INSTALL NEW NEMA-3R, 30-AMP
120/240-V, 3-W, 1-PH
HD FUSED TYPE DIS SWITCH
MOUNT ON EXISTING RACK
BEHIND EXISTING DIS SWITCH
EXISTING FEEDER TO
15-HP WATER BOOSTER PUMP
DETAIL OF POWER SOURCE
MNS #6 SITE
CITY OF HATTIESBURG, MS
3#8+#8G THWN CU
1" SCHD 80/40 PVC
(APPROX 30')
TO ELECTRONIC CONTROL PANEL
AT MNS #6 POLE

Fig. 1: Sample Station Drawing (AC Powered Battery Charger)

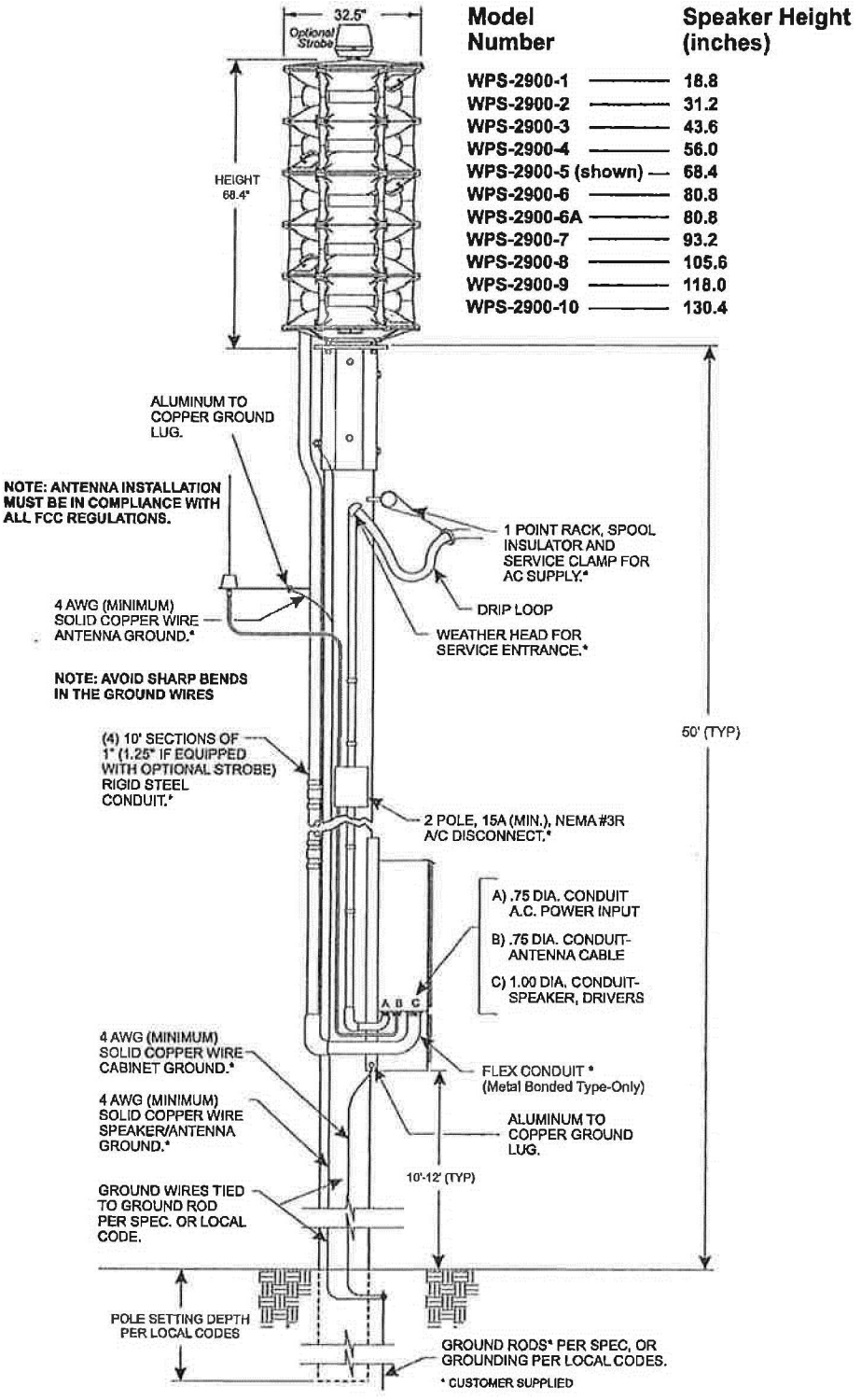

WHELEN®
ENGINEERING COMPANY INC.
51 Winthrop Road
Chester, Connecticut 06412-0684
Phone: (800) 63SIREN
Phone: (860) 526-9504
Fax: (860) 526-4784
Internet: www.whelen.com
Sales e-mail: iowsales@whelen.com
Customer Service e-mail: iowserv@whelen.com

Mass Notification

WPS-2900 SERIES HIGH POWER VOICE & SIREN SYSTEM

INSTALLATION MANUAL

***For warranty information regarding this product, visit* www.whelen.com/warranty**

©2005 Whelen Engineering Company Inc.
Form No.13947D (091609)

Table Of Contents

Important Note To Installation Technicians ..... page 6

Section I: Site Selection ..... page 8

Section II: Utility Pole Preparation
a) Pole Selection ..... page 9
b) Component Dimensions ..... page 9

Section III: Equipment Mounting
a) Pole Top Mounting Bracket ..... page 14
b) Electronic Cabinet Mounting ..... page 16
c) Siren Assembly Mounting (5 or less speaker cells) ..... page 18
d) Siren Assembly Mounting (6 or more speaker cells) ..... page 19
e) Antenna Mounting (optional) ..... page 21
f) Solar Panel Mounting (optional) ..... page 22
g) Determining Solar Panel Mounting Angle ..... page 25

Section IV: Wiring
a) Siren Connections ..... page 26
b) AC Wiring ..... page 28
c) Batteries ..... page 30
d) Landline ..... page 33
e) Auxiliary Control/Status ..... page 34
f) Paging Interface ..... page 38
g) Strobe Control Options STCTRL & SCWPS ..... page 39
h) Auxiliary Input Board ..... page 40

Section V: System Test ..... page 42

Illustrations

Fig. 1	Station Drawing	page 4
Fig. 2	Station Drawing (with optional Solar Panel)	page 5
Fig. 3	Pole Top Mounting Bracket Dimensions	page 10
Fig. 4	Type II Electronic Cabinet Dimensions	page 11
Fig. 5	Type III Electronic Cabinet Dimensions	page 12
Fig. 6	Antenna Mounting Bracket Dimensions	page 13
Fig. 7	Pole Top Mounting Bracket	page 15
Fig. 8	Electronic Cabinet Mounting (Side View)	page 16
Fig. 9	Siren to Pole Top Mounting Bracket (Side View)	page 20
Fig. 10	Antenna Mounting Orientation	page 21
Fig. 11	Solar Panel Wiring Connections	page 23
Fig. 12	Solar Panel Mounting Views	page 24
Fig. 13	Siren Amplifier Connections	page 27
Fig. 14	AC Outlet Installation	page 29
Fig. 15	Battery Connections (Type II Cabinet)	page 31
Fig. 16	Battery Connections (Type III Cabinet)	page 32
Fig. 17	Landline Wiring	page 33
Fig. 18	Auxiliary Control/Status Board Wiring	page 36
Fig. 19	Auxiliary Control/Status Board Potentiometer Locations	page 37
Fig. 20	Paging Interface Board	page 38
Fig. 21	Strobe Control Board	page 39
Fig. 22	Auxiliary Input Board	page 40
Fig. 23	System LED Indicators	page 43
Fig. 24	Electronic Cabinet Front Panel	page 44

Fig. 1: Sample Station Drawing (AC Powered Battery Charger)

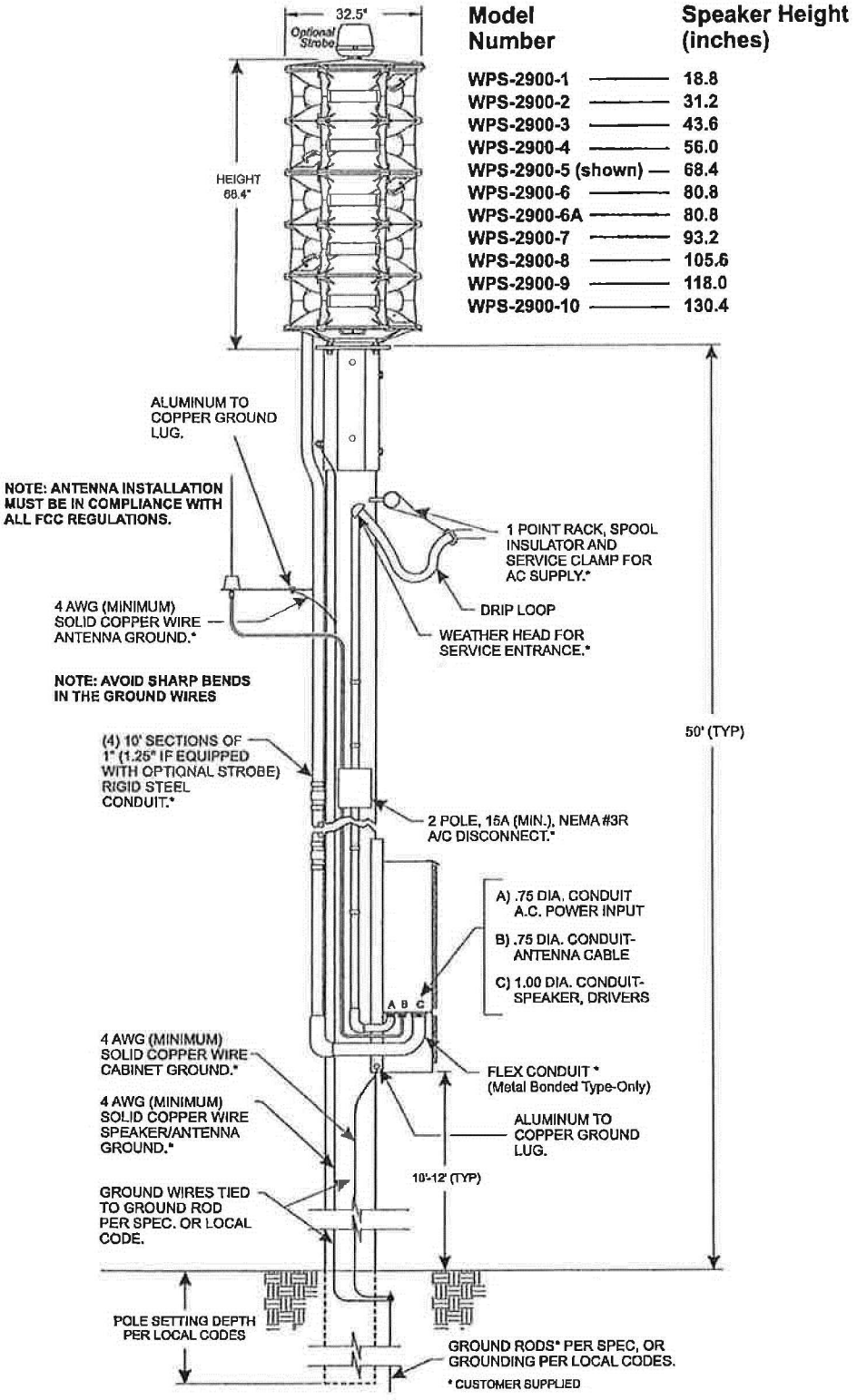

An Important Note to the Installation Technicians...

The installation of this product requires careful planning and attention to detail! The installation of this system should NOT be attempted by individuals without experience in the disciplines necessary to this procedure (i.e. High-voltage electrical wiring, utility pole installation, etc.).

The installation of the WPS-2900 station provided in this manual follows a logical progression. This process is not arbitrary! It was developed using information gathered from both the manufacturer and experienced field technicians. Deviations from any of these procedures are not recommended unless they are in contradiction with local codes. IN ALL INSTANCES, LOCAL CODES TAKE PRECEDENT OVER PROCEDURES OUTLINED HEREIN.

It is the responsibility of the installation technicians to read this entire manual. The installation procedure should not begin until all personnel are familiar with the entire process. The overall process includes the following:

Installation sequence for 5 or less cells

1. Site Selection
2. Utility Pole Preparation
3. Mount Pole Top Bracket and Ground Wire
4. Mount Electronic Cabinet to Pole
5. Mount Siren Assembly to Pole Top Bracket and Conduit to Pole
6. Set Utility Pole
7. Prepare and Mount Antenna Assembly (if present)
8. Prepare and Mount Solar Panels and Conduit (if present)
9. Installation of AC or Solar Service and Batteries
10. Confirm Proper System Operation

Installation sequence for 6 or more cells

1. Site Selection
2. Utility Pole Preparation
3. Mount Pole Top Bracket and Ground Wire
4. Mount Electronic Cabinet to Pole
5. Set Utility Pole
6. Mount Siren Assembly to Pole Top Bracket and Conduit to Pole
7. Prepare and Mount Antenna Assembly (if present)
8. Prepare and Mount Solar Panels and Conduit (if present)
9. Installation of AC or Solar Service and Batteries
10. Confirm Proper System Operation

Speaker assemblies consisting of eight (8) or more cells are shipped in two sections. The upper section must be mounted onto the lower section before the completed assembly can be mounted onto the pole.

This procedure is best performed with the lower section secured to its shipping pallet. Remove the shipping lid from the lower section before proceeding.

IMPORTANT! When placing the upper section onto the lower section, be sure to rotate the upper section so that the speaker driver is oriented 180° (farthest away) from the speaker driver for the next lowest cell.

NOTE: It is critical that the hardware used to connect the upper and lower sections is assembled in the order outlined here.

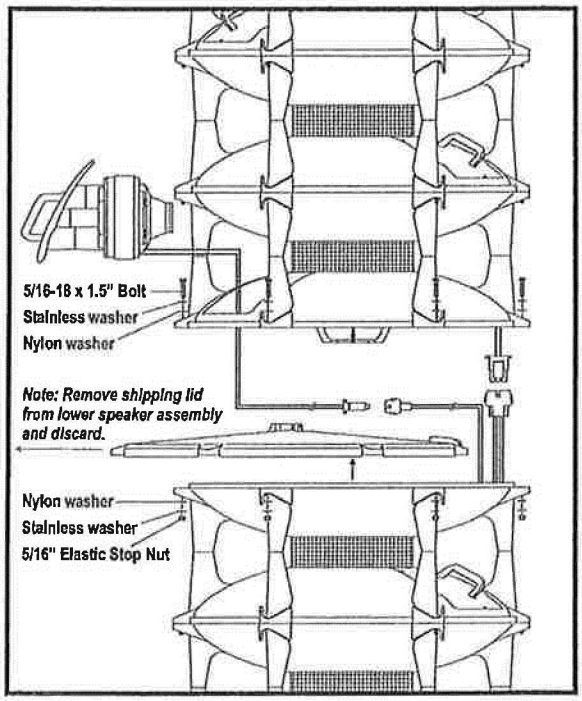

1. Locate the 5/16-18 x 1.5" bolt. Install the stainless washer washer onto this bolt. Now install the nylon washer onto this bolt as well.
2. Insert the bolt/washers down through the aligned assembly holes. Install the nylon washer onto the bolt, followed by the stainless washer and finally the 5/16" elastic-stop nut.
3. Tighten this nut, but only until it is snug. Repeat this procedure for the remaining assembly holes (6 total).
4. Sequentially tighten this hardware (in 5 Lbs/Ft. increments) until an ultimate torque value of 15 Lbs./Ft. is achieved. Be sure to follow the torque sequence shown at right.

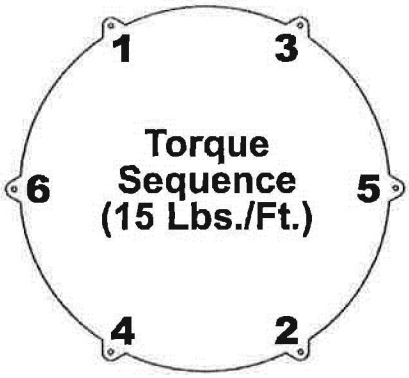

5. With the two sections now joined, plug the 2-position and 12-position connectors into their respective mating connectors. Confirm full connector engagement by squeezing the locking tabs until they 'click' into place. Secure the speaker driver (shown removed) onto its mounting location. Be sure that the driver properly engages the speaker horn and secure the assembly to the speaker using the hardware provided (#8 x 3/4"). Tighten these screws until a torque value of 6 Lbs./In. is achieved.

Section I: Site Selection

The site selection for the WPS-2900 requires careful consideration in order to achieve the optimum coverage of the siren station. For a guideline to system planning, sound propagation and site selection we direct the user to the Federal Emergency Management Agency's "Outdoor Warning Systems Guide, CPG 1-17."

The location of the siren site should be reviewed for its compatibility with its surroundings such as private homes, schools and hospitals. The user is cautioned to consider the use of hearing protection devices for service personnel working in close proximity to the speaker cluster.

Access to the siren site is important from the standpoint of service, maintenance inspection and access to a utility service connect.

Site locations for radio controlled units should be reviewed for radio reception.

Section II: Utility Pole Preparation...

a) Pole Selection

NOTE: **This installation manual will address the procedures applicable to wooden utility poles of specific size and dimensions. Procedures for poles consisting of other materials (steel, concrete, etc.) are not addressed within this document. The information presented, however, provides the necessary data and guidelines for a successful installation regardless of pole material.**

A WPS-2900 system consisting of 5 or less speaker cells may use a Class 2 or Class 1 utility pole. For systems consisting of 6 or more speaker cells, a Class 1 utility pole must be used. The length of the utility pole is consistent regardless of speaker cell quantity. The total length of the pole referenced within this document is 60 feet. The pole depth of the set pole is 10 feet, leaving a 50 foot pole as measured from the top of the pole to the ground. The utility pole should be set in accordance with local codes.

The inside area of the pole top mounting bracket will accept a pole that is no greater than 10.00" in diameter. On large scale projects, it is beneficial to order the pole to be "gained" to a top diameter of 9.5" +/- .50" for the top 30" section of the utility pole.

b) Component Dimensions

The utility pole may be pre-drilled prior to installation. The dimensions for all potentially mounted equipment are as follows:

Fig. 3: Pole Top Mounting Bracket Dimensions

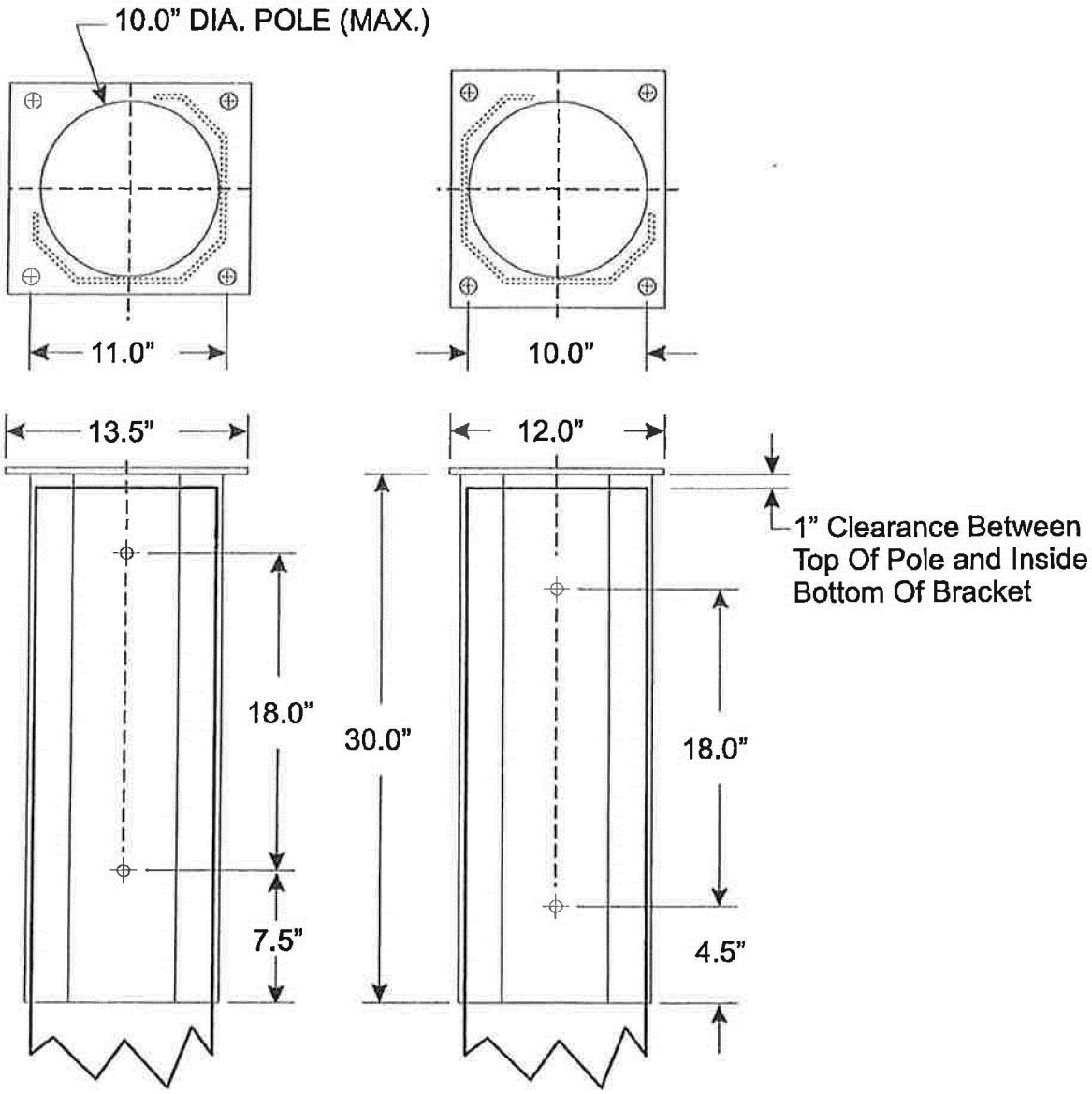

Fig. 4: Type II Electronic Cabinet Dimensions

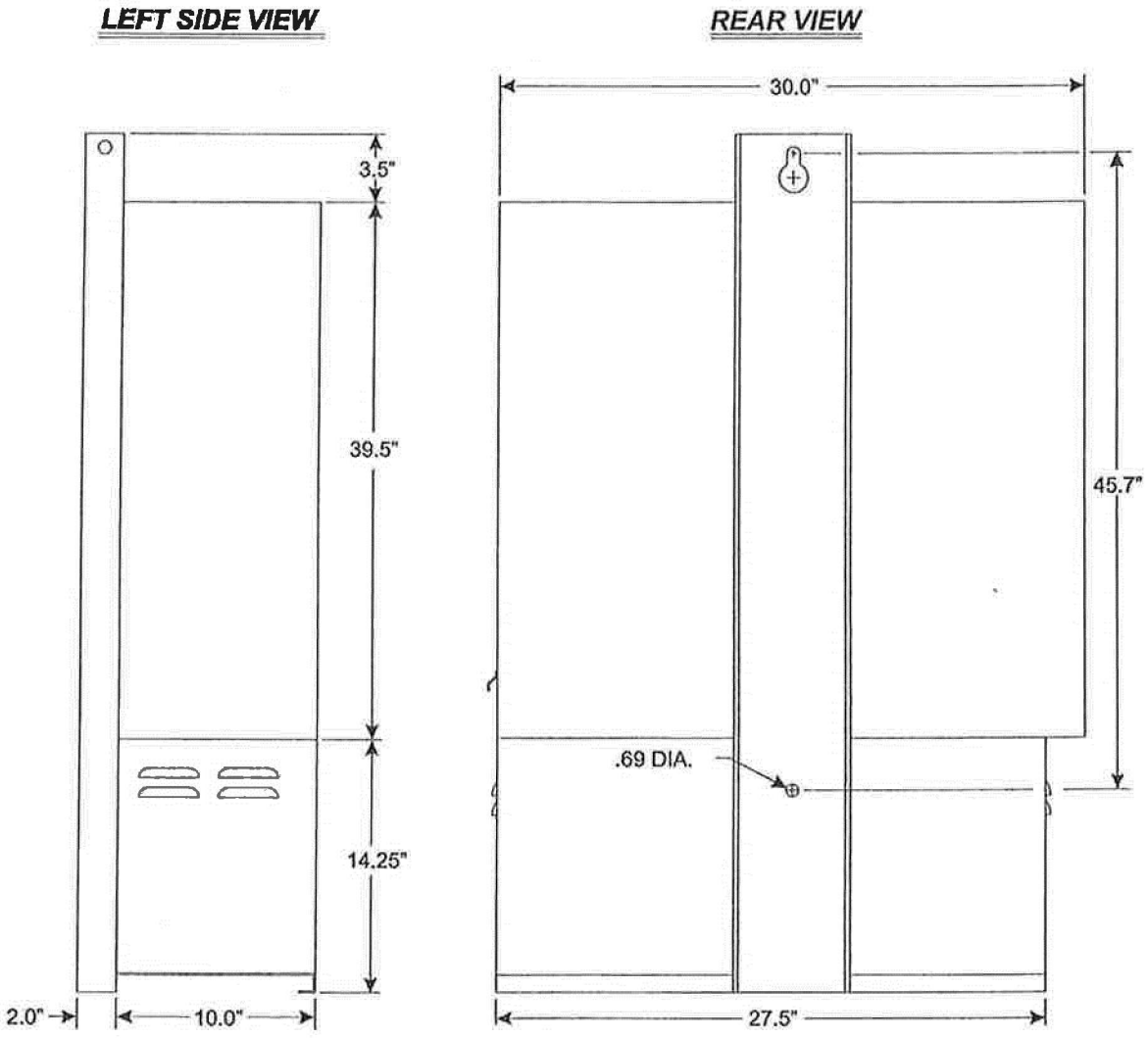

Fig. 5: Type III Electronic Cabinet Dimensions

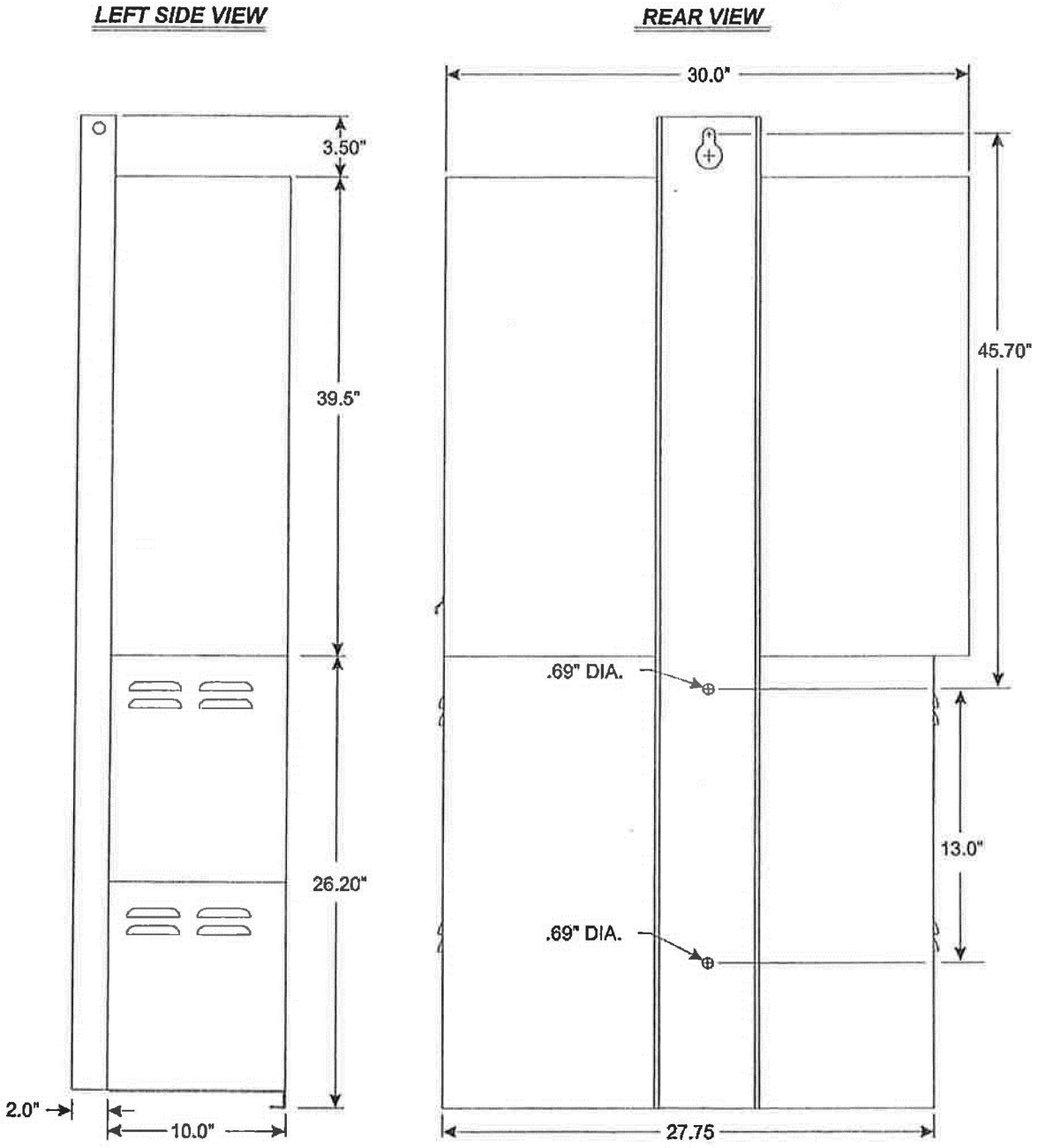

Fig. 6: Antenna Mounting Bracket Dimensions

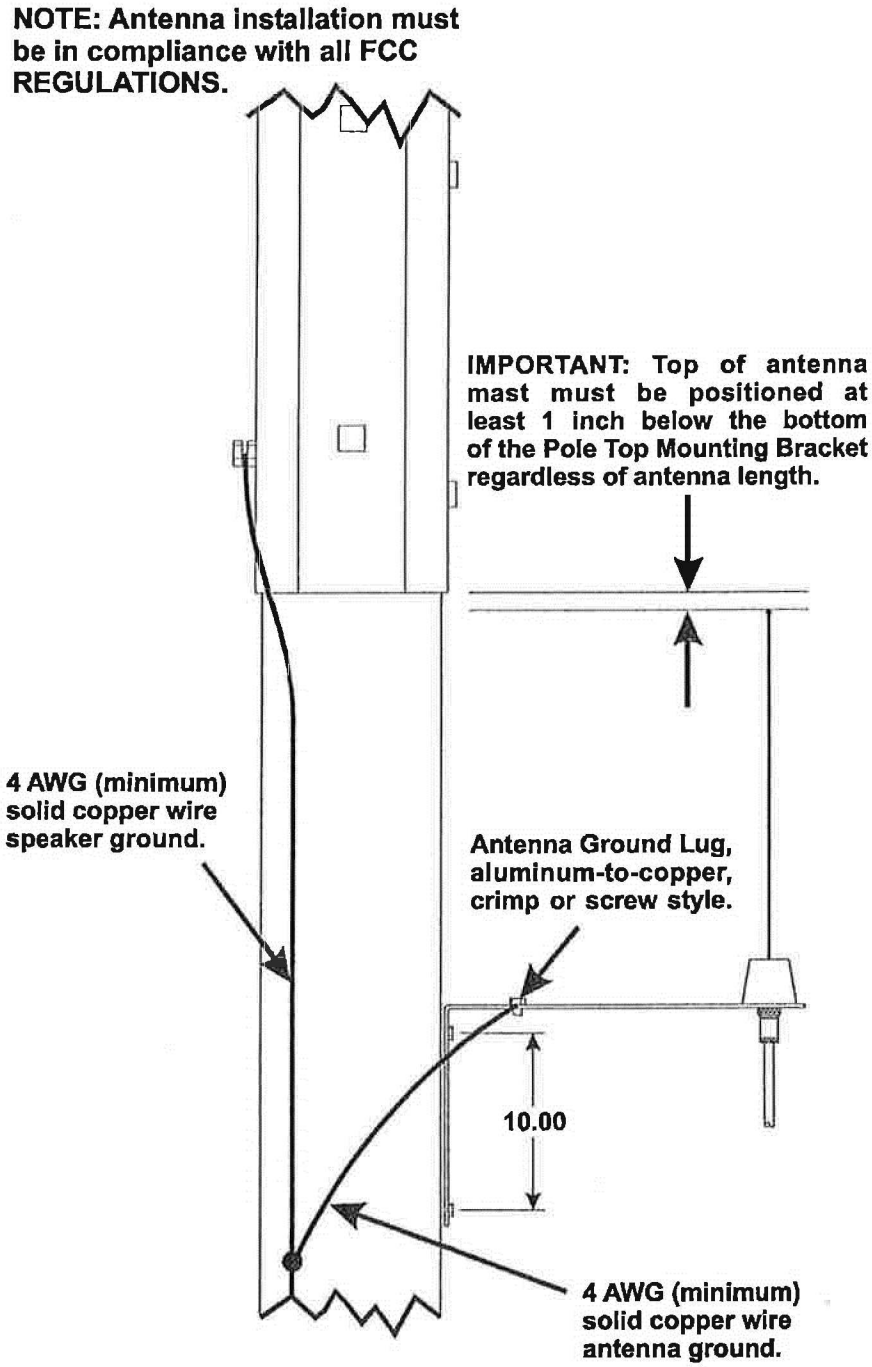

Section III: Equipment Mounting

a) Pole Top Bracket Installation...

Items Required for installation (not included)....

- **(4) 5/8" x 14" Hex or Square head mounting bolts**
- **(4) 5/8" Hex or Square head nuts**
- **(8) 5/8" Flat Washer sized for the above referenced mounting bolt**
- **(4) 5/8" Lock Washer**

1. **Position the WPS-2900 pole top mounting bracket onto the top of the pole (see "Fig. 7: Pole Top Mounting Bracket" on page 15). Make sure there is a 1 inch space between the top of the pole and the pole top mounting bracket (see "Fig. 3: Pole Top Mounting Bracket Dimensions" on page 10).**

NOTE: **The inside area of the pole top mounting bracket will accept a pole that is no greater than 10.00" in diameter. On large scale projects, it is beneficial to order the pole to be "gained" to a top diameter of 9.5" +/- .50" for the top 30" section of the utility pole.**

2. **Using the pole top mounting bracket as a guide, drill four mounting holes through the pole at the bracket mounting hole locations. These holes should be sized to accommodate the above referenced hardware.**
3. **Secure the bracket to the pole using the prescribed hardware (see "Fig. 7: Pole Top Mounting Bracket" on page 15). Be sure to position all the associated hardware items in their proper order.**
4. **Secure a length of #4 solid copper wire to the pole top bracket grounding lug using the supplied nut. Make sure that this wire is of sufficient length to reach the ground when the pole has been set.**

NOTE: **All Hardware used for connecting equipment to the utility pole should be inspected for tightness between 12 to 18 months after installation. Some shrinkage of the newly treated utility pole may occur, loosening connections.**

Fig. 7: Pole Top Mounting Bracket

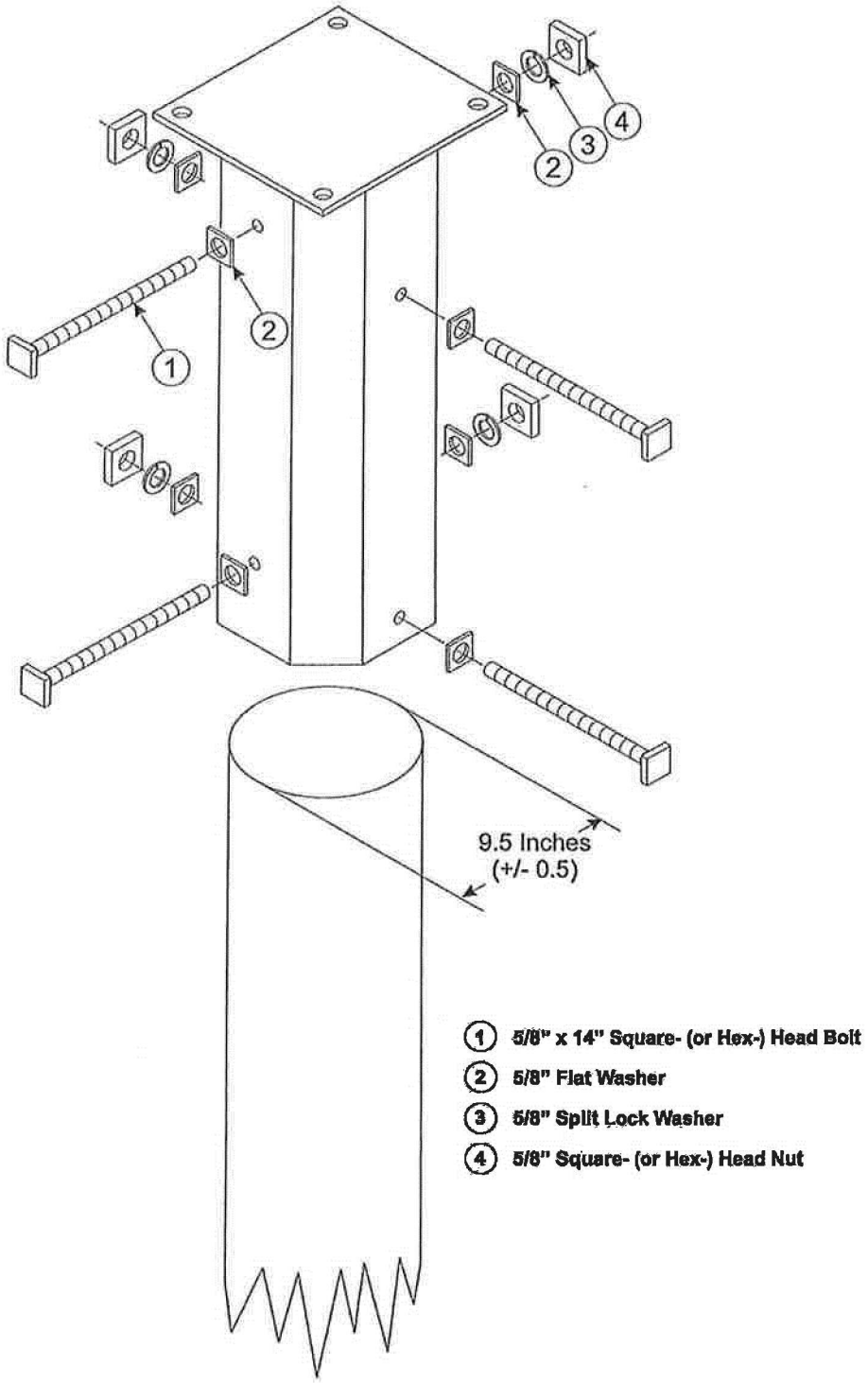

b) Electronic Cabinet Mounting and Siren Connections...

Mounting

Items Required for installation (not included)....

For Type II & III cabinets

Qty. (Type II)	Qty. (Type III)	Description
(2)	(3)	5/8" x 14" Hex or Square head mounting bolts
(4)	(6)	5/8" Flat Washer sized for the above mounting bolt
(2)	(3)	5/8" Split-Lock Washer
(2)	(3)	5/8" Hex or Square head nuts
(1)	(1)	Aluminum-to-Copper lug sized for #4 ground wire (crimp or screw style)
(1)	(1)	Stainless Steel 1/4-20 x 2" bolt with appropriately sized flat washer, split-lock washer and nut
(1)	(1)	10' Copper ground rod

Fig. 8: Electronic Cabinet Mounting (Side View)

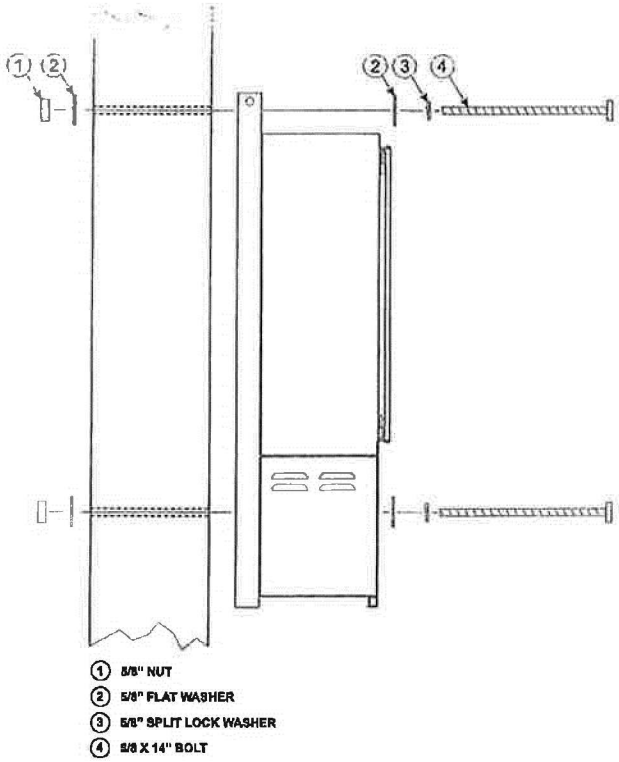

The WPS-2900 siren case assembly may be installed onto the pole and wired before setting the pole.

NOTE: Note: Due to the weight of the siren amplifier panel, the electronic cabinet assembly must be transported in an upright fashion to prevent distortion of the amplifier panel.

1. It is necessary for the installer to remember that two factors should determine the optimum mounting location; the desired distance of the mounted cabinet to the ground (typically 10 to 12 feet as measured from the bottom of the cabinet) and available speaker wire length (speaker assemblies are provided with a minimum of 50 feet of speaker wire as measured from the bottom of the speaker assembly).
2. After the mounting location has been determined, drill an appropriately sized thru-hole into the pole at the top cabinet mounting hole. Install a bolt loosely into the hole and hang the cabinet onto the bolt.
3. With the cabinet fitted snugly to the pole, mark the surface of the pole at the lower mounting hole location inside the battery storage compartment. Type III cabinets will have an additional mounting hole located in the second battery storage compartment (see "Fig. 5: Type III Electronic Cabinet Dimensions" on page 12). Remove the cabinet from the pole and drill an appropriately sized thru-hole into the pole at the location(s) marked. Return the cabinet to its mounting location and secure to the pole using the specified hardware.
4. Install an aluminum-to-copper lug (crimp or screw style) onto the #4 solid copper wire. Secure this to the cabinet mounting channel in hole supplied using stainless steel 1/4 - 20 hardware.
5. Install the ground rod as specified by local codes and connect both copper wires (from pole top mounting bracket and electronic cabinet) to this rod.
6. Install rigid steel conduit and necessary couplings from the speaker's 1" conduit adapter to the 1" speaker conduit protruding from the base of the siren case assembly. Beacon-equipped speakers will require the use of 1.25" speaker conduit and the necessary adapters for connection to both the 1" speaker base and 1" siren case assembly.The first section of conduit may be installed onto the speaker's base casting prior to mounting the speaker to the pole top bracket. At the option of the user, conduit unions may be used between the first section of conduit and the speaker base casting and at the speaker cable conduit entrance to the siren case assembly.

NOTE: If the location of the conduit on the pole requires difficult conduit bends or couplings, a section of metal bonded seal tight conduit NOT TO EXCEED 24 INCHES may be used at the top of the pole and/or at the bottom of the pole as needed for the speaker cable installation.

Batteries for the system should not be installed until the siren station is set in place, otherwise some leakage of the battery fluid may occur. Batteries should not be connected to the system until AC power (or solar power if equipped) is available to the system to operate the system's battery charger.

IMPORTANT! Before proceeding with the speaker installation, it is necessary for the installer to know the number of speaker cells to be installed on the utility pole. If the speaker assembly to be installed consists of 5 (five) or less speaker cells, the speaker assembly may, at the installers discretion, be mounted onto the utility pole before the pole has been set. Siren assemblies consisting of 6 (six) or more speaker cells require the utility pole to be set prior to mounting. These larger assemblies also require a special mounting procedure that must be followed to avoid damaging the assembly. Both procedures are outlined in the following sections.

c) Siren Assembly Mounting (5 or less speaker cells)...

Hardware required for installation (factory included)....

- **(8) 3/4"-10 hex head nuts**
- **(8) 7/8" Flat Washers**
- **(4) 3/4" Split Lock Washers**

1. **Sling or cradle the utility pole in a safe manner so that the pole top is 3 to 4 feet off the ground. This will allow the speaker assembly to clear the ground when installed.**
2. **Locate the 4 mounting studs on the bottom of the speaker assembly (see "Fig. 9: Siren to Pole Top Mounting Bracket (Side View)" on page 20).**
3. **Thread a 3/4" hex nut onto each of the mounting studs until there is approximately 1" of space between the top of the nuts and the bottom of the siren assembly. This space will allow the speaker assembly to be leveled once the pole has been set.**
4. **Install a 7/8" flat washer onto each of the mounting studs.**
5. **Insert the four mounting studs through the mounting holes on the top of the pole top bracket. The bottom of the siren assembly should lie flat against the pole top bracket.**
6. **Install a 7/8" flat washer onto each of the mounting studs.**
7. **Install a 3/4" split lock-washer onto each of the mounting studs.**
8. **Thread a 3/4" hex nut onto each of the mounting studs. Tighten this nut firmly to secure the siren assembly to the pole top bracket.**

At this point the pole should now be set. However, the installer may use their own discretion as to whether to mount the electronic cabinet onto the utility pole before the pole is set.

When the pole has been set, use the adjustment nuts (indicated in step 2) to adjust the siren assembly until it is level.

d) Siren Assembly Mounting (6 or more speaker cells)...

Hardware required for installation (factory included)....

- **(8) 3/4"-10 hex head nuts**
- **(8) 7/8" Flat Washers**
- **(4) 3/4" Split Lock Washers**

Items required (not included)

Crane, Bucket Truck or similar lifting device

Straps

The larger siren assemblies (6 or more speaker cells) may only be mounted onto the pole top bracket after the pole has been set. Due to their increased mass and size, these assemblies *must* be properly supported from the bottom of the assembly while being lifted into position. DO NOT ATTEMPT TO LIFT THE SIREN ASSEMBLY FROM THE TOP!

1. **Locate the 4 mounting studs on the bottom of the speaker assembly (see "Fig. 9: Siren to Pole Top Mounting Bracket (Side View)" on page 20).**
2. **Thread a 3/4" hex nut onto each of the mounting studs until there is approximately 1" of space between the top of the nuts and the bottom of the siren assembly. This space will allow the speaker assembly to be leveled once the pole has been set.**
3. **Install a 7/8" flat washer onto each of the mounting studs.**
4. **Insert the four mounting studs through the mounting holes on the top of the pole top bracket. The bottom of the siren assembly should lie flat against the pole top bracket.**
5. **Install a 7/8" flat washer onto each of the mounting studs.**
6. **Install a 3/4" split lock-washer onto each of the mounting studs.**
7. **Thread a 3/4" hex nut onto each of the mounting studs. Tighten this nut firmly to secure the siren assembly to the pole top bracket.**
8. **Use the adjustment nuts (indicated in step 2) to adjust the siren assembly until it is level.**

Fig. 9: Siren to Pole Top Mounting Bracket (Side View)

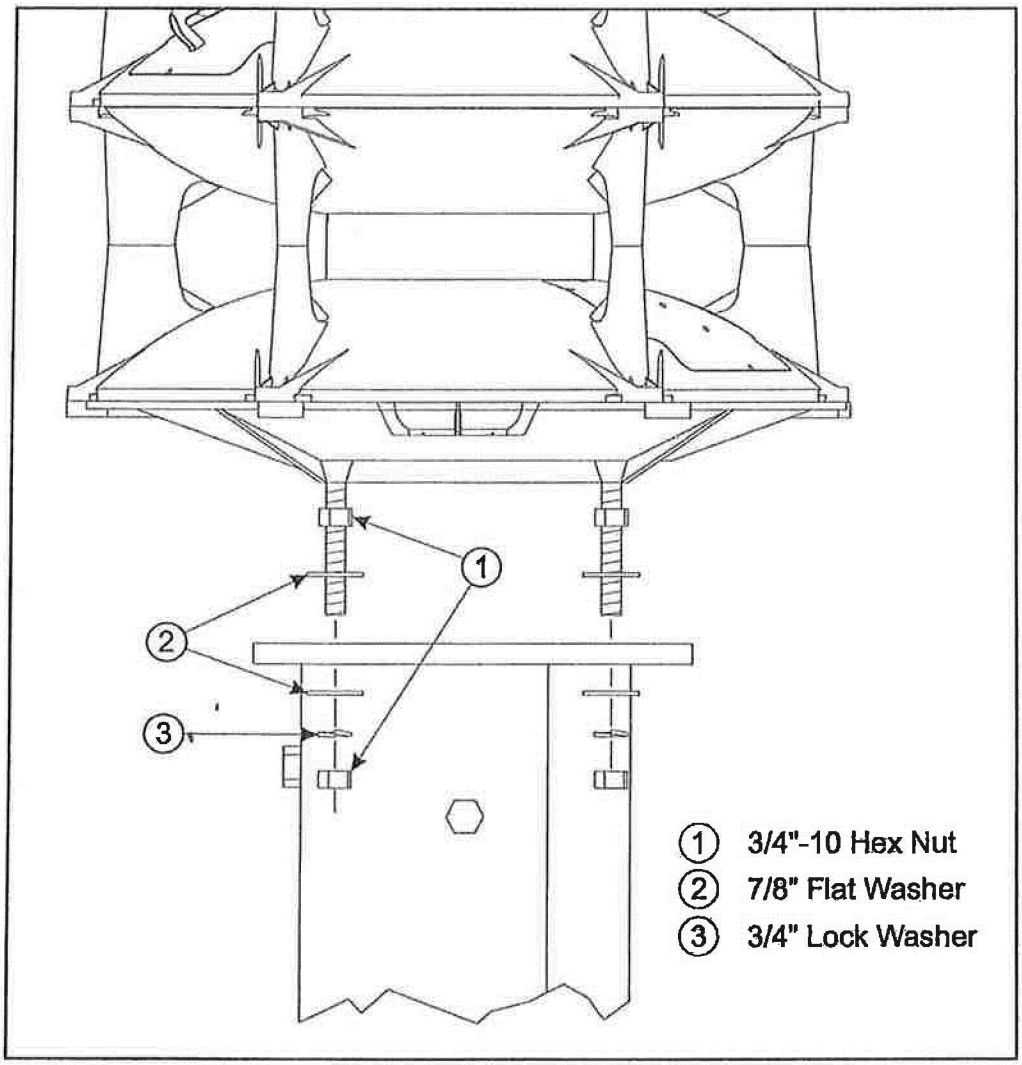

e) Antenna Mounting (optional)...

NOTE: Antenna installation must be in compliance with all FCC regulations.

The proper antenna bracket mounting location is determined by several considerations. The antenna bracket should be positioned as high on the utility pole as is possible. However, under no circumstances should the top of the installed antenna mast be any closer than one inch from the bottom of the Pole Top Mounting Bracket (see "Fig. 6: Antenna Mounting Bracket Dimensions" on page 13). Be sure to ground the antenna bracket as shown using 4 AWG solid copper wire. The antenna cable provided by the factory is 35 feet in length.

It is also important to remember that the antenna MUST be mounted on the side of the utility pole that faces the transmitter (see below)

Fig. 10: Antenna Mounting Orientation

Improper Antenna Orientation

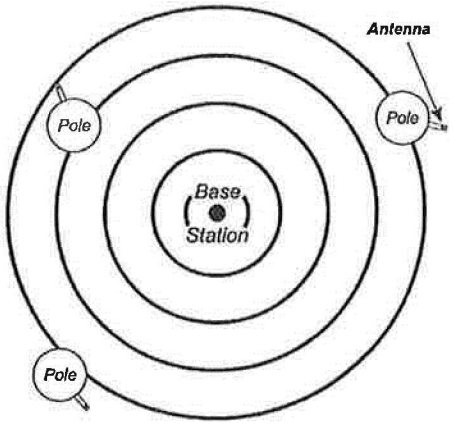

Correct Antenna Orientation

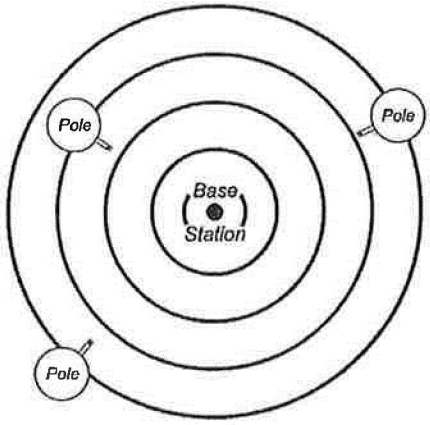

Refer to the installation sheet included with your antenna kit for further information regarding cable connections and antenna trimming.

f) Solar Panel Mounting (optional)...

The solar panel must be installed so that it is directly facing the earth's equator with an unobstructed view. Failure to orient the solar panel in this way will result in significantly reduced charging effectiveness.

The most critical aspect of properly mounting the solar panel involves achieving the optimum tilt angle. The tilt angle is determined by the distance between the upper and lower mounting brackets, as shown (see "Fig. 12: Solar Panel Mounting Views" on page 24).

Refer to page 23 for electrical connection information.

Refer to page 24 for general solar panel mounting.

Refer to page 25 for information on determining your specific mounting angle.

Run rigid steel conduit from the solar panel to the 3/4" AC knockout located at the bottom of the siren case assembly. A section of up to 24 inches of metal bonded seal tight conduit may be utilized where conduit connections to the solar panel or electronic cabinet are not conveniently accomplished with rigid steel conduit and fittings. This conduit should be sealed to prevent insects and pests from entering the siren case assembly.

Fig. 11: Solar Panel Wiring Connections

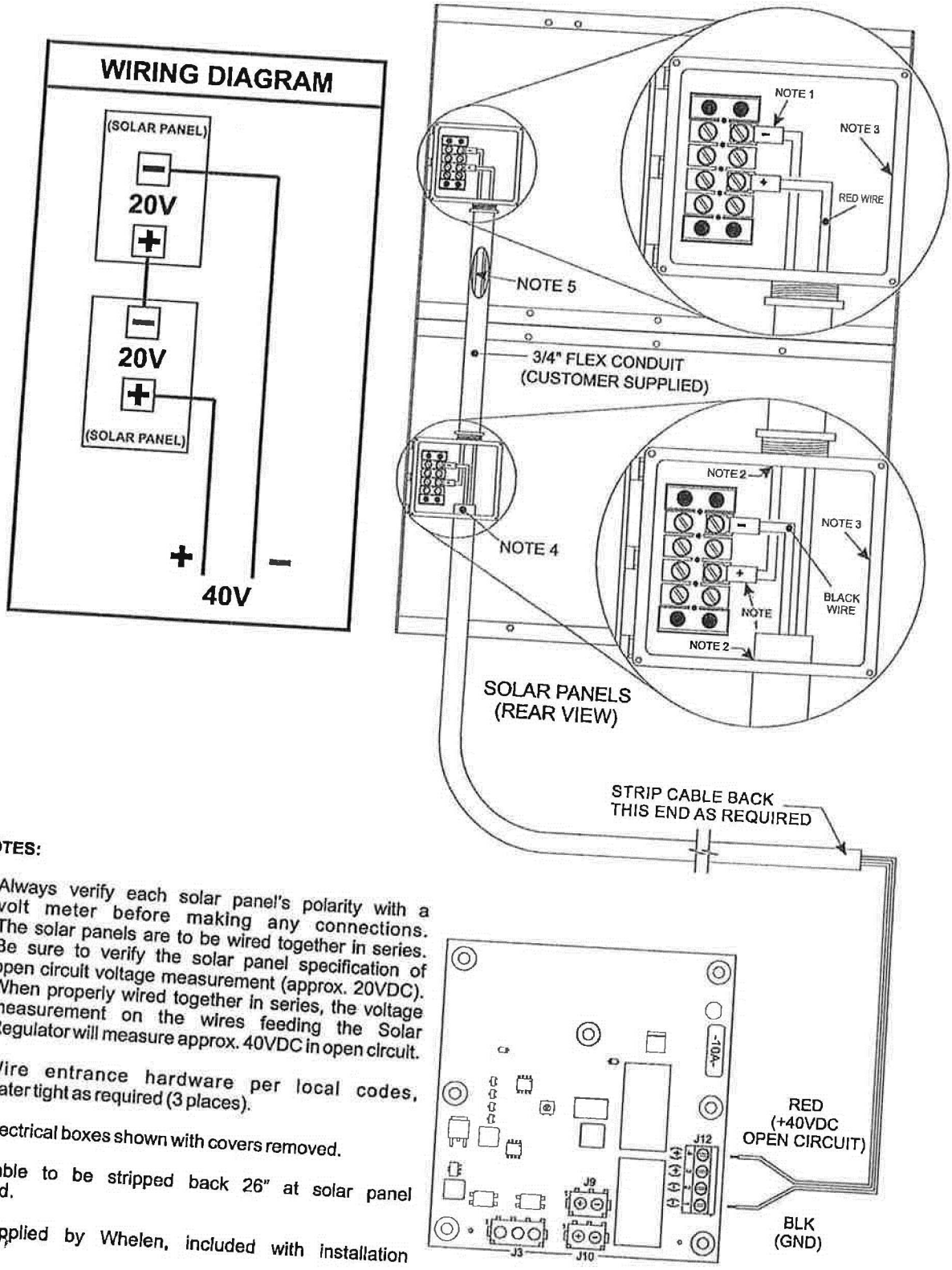

NOTES:

1. Always verify each solar panel's polarity with a volt meter before making any connections. The solar panels are to be wired together in series. Be sure to verify the solar panel specification of open circuit voltage measurement (approx. 20VDC). When properly wired together in series, the voltage measurement on the wires feeding the Solar Regulator will measure approx. 40VDC in open circuit.
2. Wire entrance hardware per local codes, water tight as required (3 places).
3. Electrical boxes shown with covers removed.
4. Cable to be stripped back 26" at solar panel end.
5. Supplied by Whelen, included with installation kit.

Fig. 12: Solar Panel Mounting Views

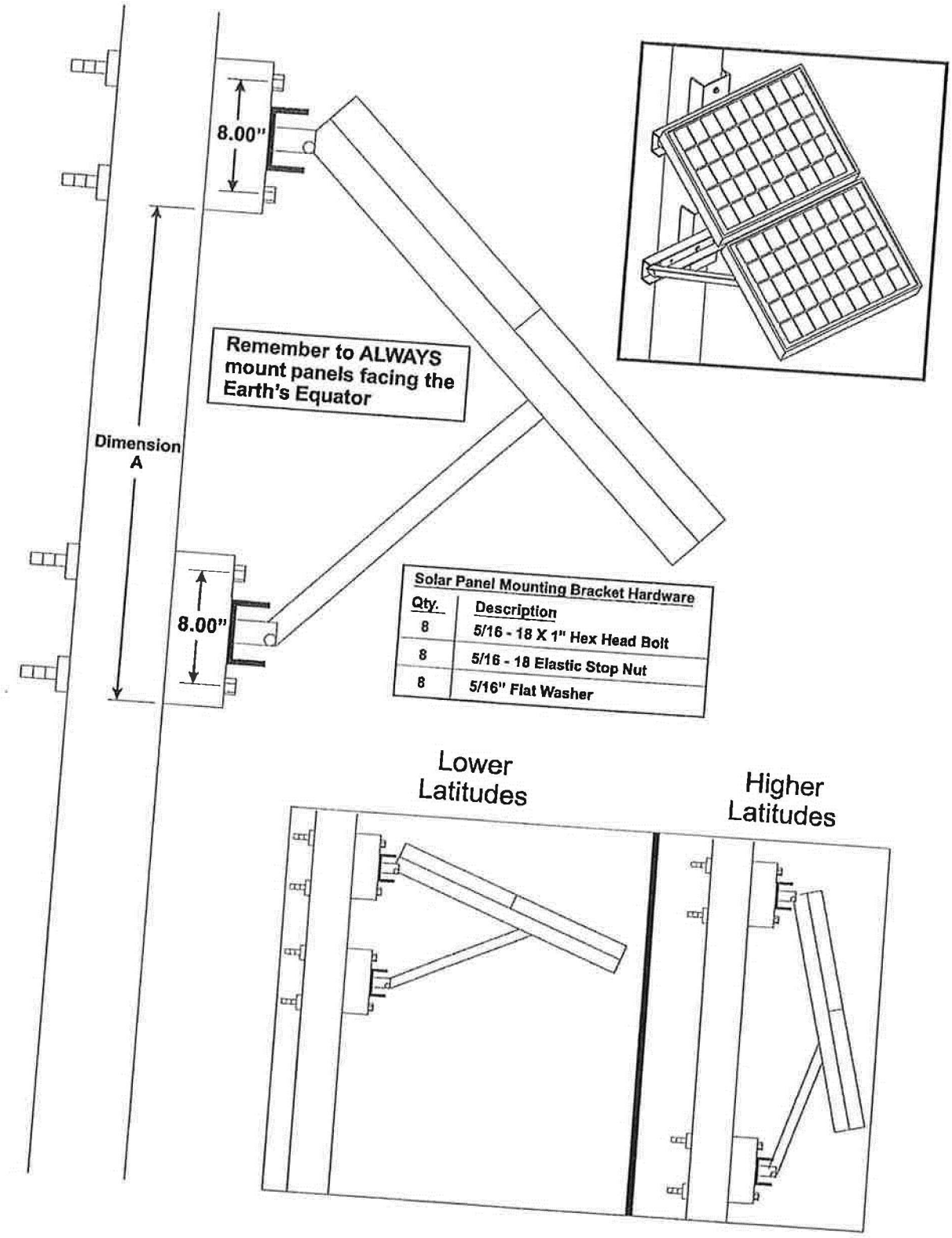

g) Determining Solar Panel Mounting Angle

1. Determine the *Latitude* of your location.
2. Find your *Latitude* on the table below and note the corresponding *Tilt Angle.*

LATITUDE	TILT ANGLE
0° to 9°	75° = Tilt Angle
10° to 20°	85° minus LATITUDE = Tilt Angle
21° to 45°	80° minus LATITUDE = Tilt Angle
46° to 65°	75° minus LATITUDE = Tilt Angle
66° to 75°	10° minus LATITUDE = Tilt Angle

3. Locate your TILT ANGLE in the list below. For every TILT ANGLE, there is a corresponding "Dimension A". "Dimension A" represents the distance from the bottom of the upper mounting bracket to the bottom of the lower mounting bracket.

example 1:
Location LATITUDE is 30°
80° - 30° = 50° Tilt Angle
50° Tilt Angle = 33.60" Dimension A

example 2:
Location LATITUDE is 7°
7° = 75° Tilt Angle
75° Tilt Angle =15.54" Dimension A

Tilt Angle	Dimension A (inches)
10	50.49
11	50.34
12	50.16
13	49.97
14	49.77
15	49.55
16	49.32
17	49.08
18	48.82
19	48.54
20	48.25
21	47.95
22	47.63
23	47.30
24	46.95
25	46.59
26	46.22
27	45.83
28	45.43
29	45.02
30	44.60
31	44.16

Tilt Angle	Dimension A (inches)
32	43.71
33	43.24
34	42.77
35	42.28
36	41.78
37	41.26
38	40.74
39	40.20
40	39.65
41	39.10
42	38.53
43	37.95
44	37.36
45	36.75
46	36.14
47	35.52
48	34.89
49	34.25
50	33.60
51	32.95
52	32.28
53	31.61

Tilt Angle	Dimension A (inches)
54	30.93
55	30.24
56	29.54
57	28.84
58	28.13
59	27.41
60	26.69
61	25.96
62	25.23
63	24.50
64	23.76
65	23.01
66	22.27
67	21.52
68	20.77
69	20.02
70	19.27
71	18.52
72	17.77
73	17.02
74	16.28
75	15.54

Section IV: Wiring

a) Siren Connections

The type of speaker harness you receive depends on the number of speaker cells present. For systems consisting of 1 to 5 speaker cells, a 5-pair harness cable is provided. This cable has 5 BLACK wires numbered 1 to 5 and 5 RED wires numbered 1 to 5. For systems with 6 to 10 speaker cells, a 10-pair harness cable is used. This wires in this cable are designated as follows:

10 BLACK wires numbered 1 to 10

10 RED wires numbered 1 to 10

In systems with unused wires, dress the unused wires so they are out of the way. Do not cut these wires, as they can be used to replace damaged wires in the future.

NOTE: The following procedure provides the information necessary for successfully connecting the siren harness wires to their designated amplifiers. Depending upon the distance between the siren base and the electronic cabinet, there will be varying lengths of wire remaining in the cabinet. It is the installers responsibility to properly trim and dress these wires in a fashion that not only leaves the wires organized, but also includes a service loop of suitable length.

1. Locate the siren wiring harness where it enters the electronic cabinet.
2. Locate the BLACK and RED wires marked 1 on their insulation. These wires are designated for connection to siren amplifier 1.
3. Route these wires through the cabinet's wire loom and connect to Amp 1 (see "Fig. 13: Siren Amplifier Connections" on page 27).
4. Repeat steps 2 and 3, substituting the appropriate number for all remaining amplifiers.
5. When all amplifiers have been wired, install loom cover.

Authors Note: Prior to this writing, systems with 6 to 9 speaker cells received a 9-pair harness cable, with Red and Black wires numbered 1 to 9. Systems with 10 speaker cells received two, 5-pair cables. One cable used Red and Black wires numbered 1 to 5, while the remaining cable used Red and Black wires numbered 1A to 5A (to be used for amplifiers 6 thru 10).

Fig. 13: Siren Amplifier Connections

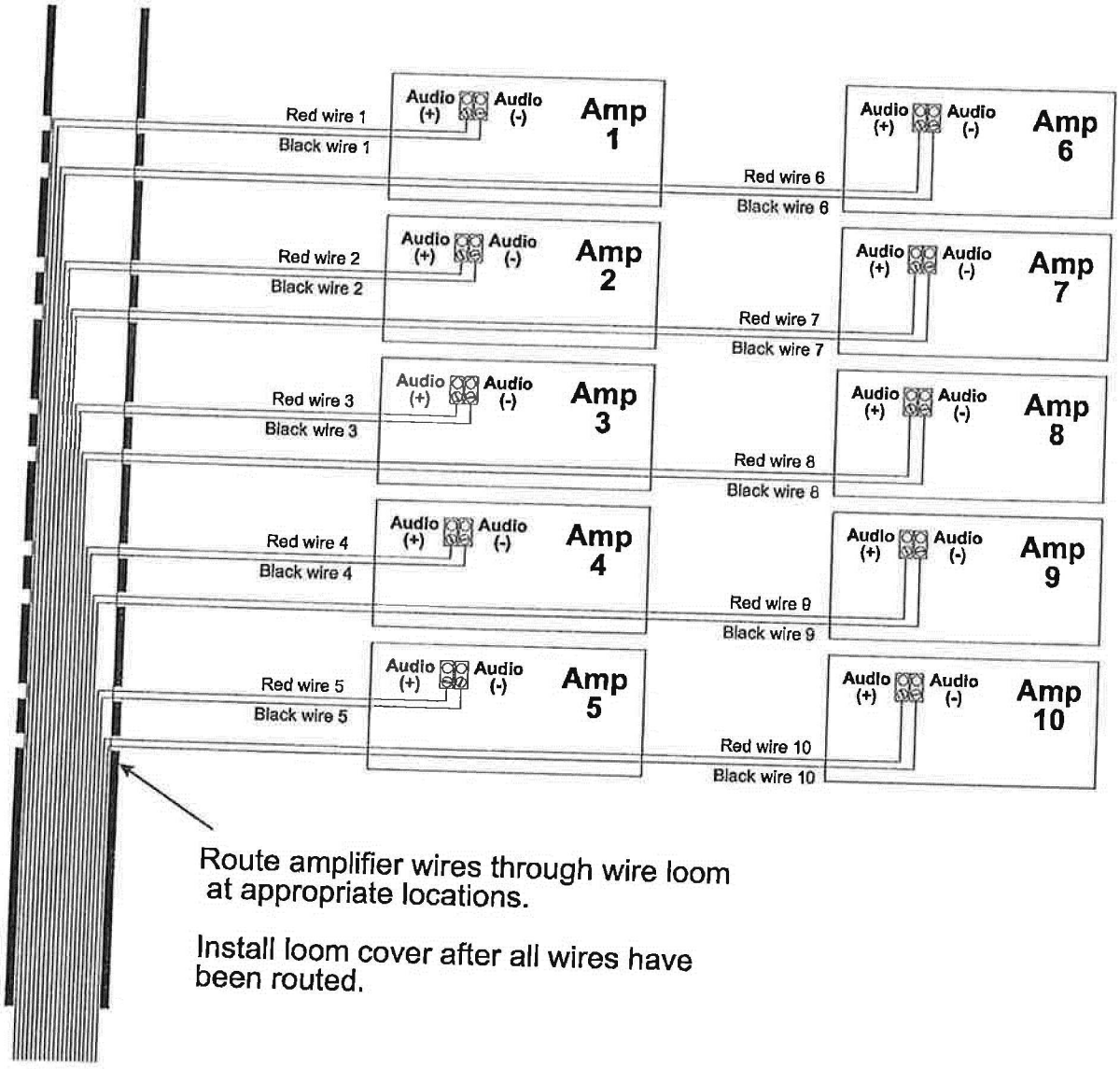

b) AC Wiring

An AC Service (Single Phase only) with an acceptable disconnect is required. A 15 amp (minimum) 120 VAC circuit is recommended.

Locate the service on the pole according to local codes, taking care that the service entrance will meet height requirements once the pole is set into place.

The WPS-2900 includes a 15 amp, 120 VAC outlet. The cabinet's battery charger plugs into one of the receptacles. The remaining receptacle is available for use by service personnel (see "Fig. 14: AC Outlet Installation" on page 29).

NOTE: **A section of up to 24 inches of metal bonded seal tight conduit may be utilized where conduit connections to the siren case assembly are not conveniently accomplished with rigid steel conduit and fittings.**

Each WPS-2900 siren system is supplied with a Lightning arrestor which is to be installed on the AC service. Local codes should be reviewed and followed to establish the connection of this device on the primary or secondary side of the disconnect.

NOTE: **The location of the siren site should be reviewed for the quality of the AC service. AC power sources that are subject to excessive power surges or transients are not acceptable.**

The AC charger is simply plugged into an AC duplex outlet (factory included) installed as follows:

1. **Remove the cover from the 4" x 4" box.**
2. **Position the 3/4" knock-out in the box above the 3/4" knockout in the cabinet.**
3. **Attach a flex fitting (not included) through the cabinet and the box. This will secure the box to the cabinet.**
4. **Connect the AC service to the leads on the cover assembly.**
5. **Attach the cover to the box.**
6. **Attach ground wire (GREEN) to cabinet ground stud above the installed outlet.**

Fig. 14: AC Outlet Installation

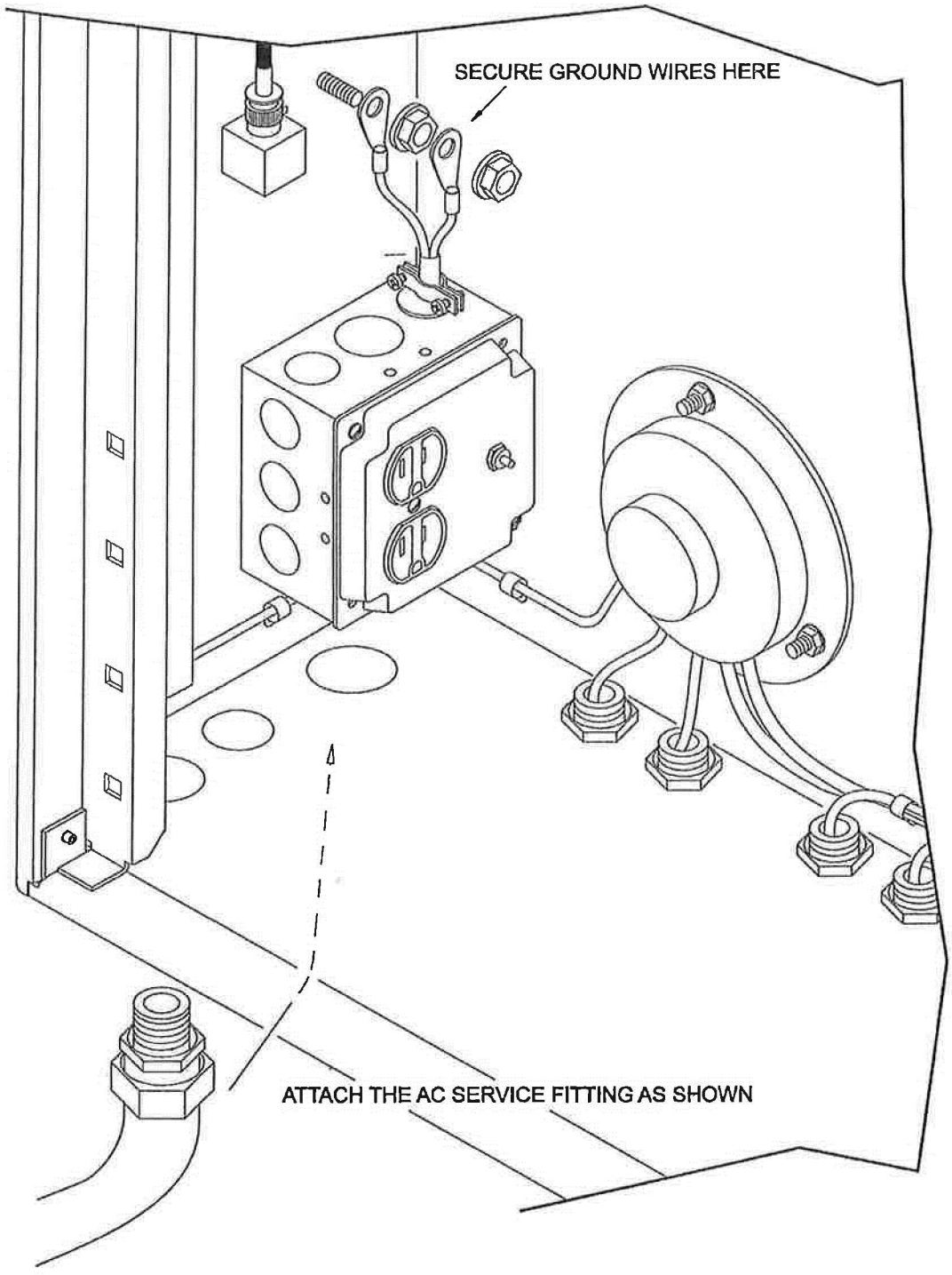

c) Batteries

1. Make sure that the system battery switch is in the OFF position.
2. Install the batteries included with your system and connect them as shown in the illustration representing your cabinet type. MAKE SURE TO OBSERVE THE POLARITY OF THE TERMINALS BEFORE MAKING ANY CONNECTIONS.

NOTE: For battery wiring, DC wiring conventions are used (BLACK is ground (-)).

For Type II Cabinets (see "Fig. 15: Battery Connections (Type II Cabinet)" on page 31)

Type III Cabinets (see "Fig. 16: Battery Connections (Type III Cabinet)" on page 32)

3. Rotate the system battery switch to the ON position.
4. Plug the battery charger into the AC outlet.
5. Verify system operation as outlined in the system maintenance check list.

Fig. 15: Battery Connections (Type II Cabinet)

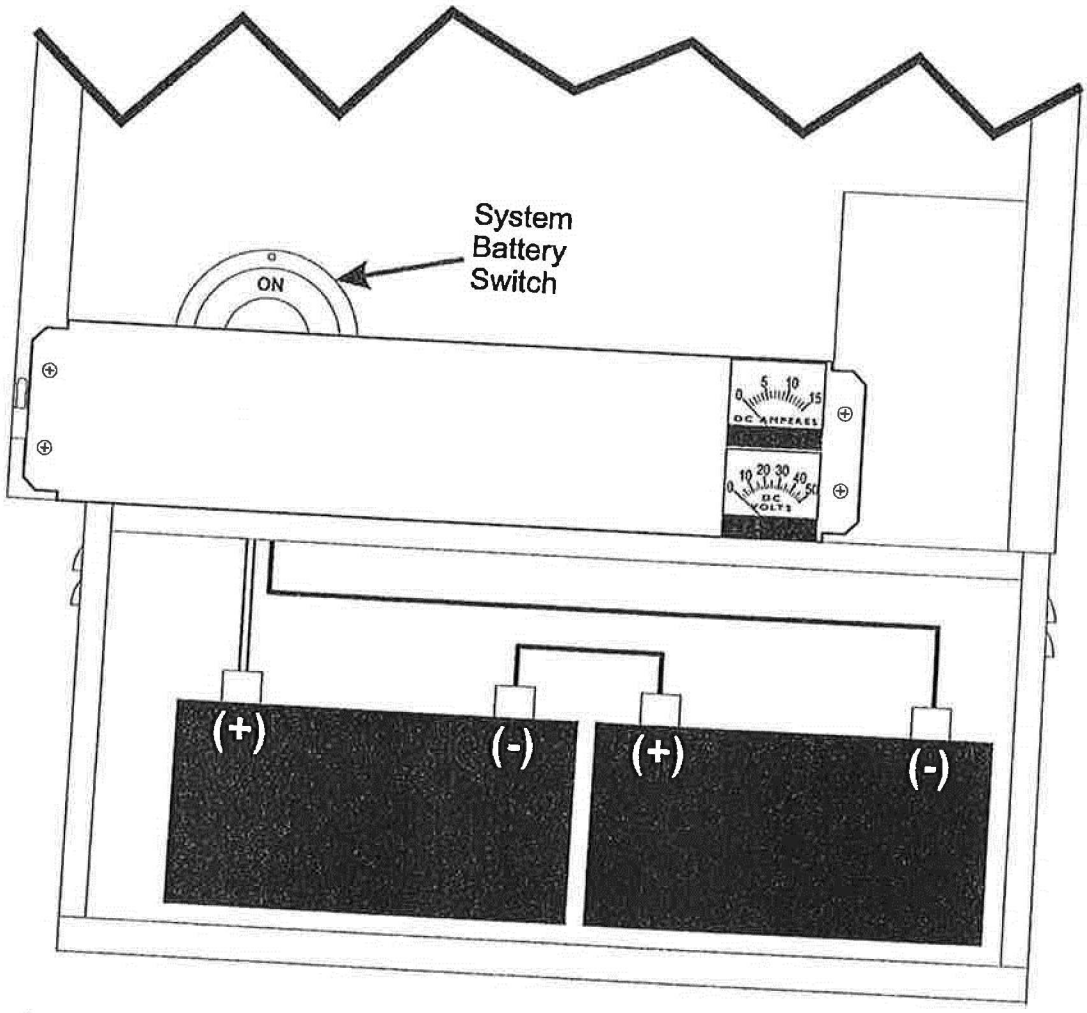

Fig. 16: Battery Connections (Type III Cabinet)

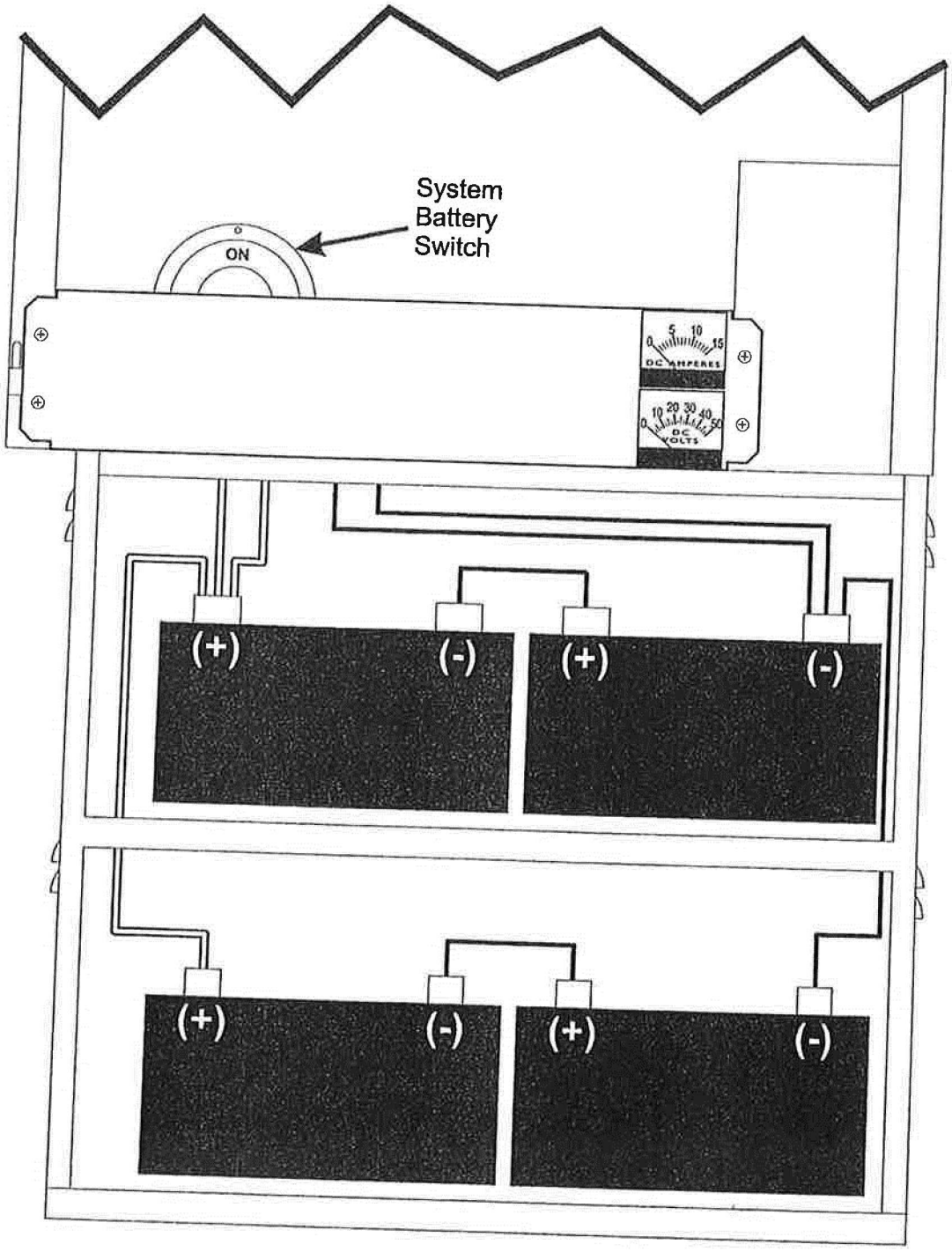

d) Landline (optional)

As an option, the WPS-2900 may be remotely controlled by either landline or RF link. Both methods communicate via DTMF protocol. Remote control may be one-way or two-way. The one-way option simply controls the WPS-2900, while the two-way option controls the WPS-2900 and reports WPS-2900 status back to a central control point.

Fig. 17: Landline Wiring

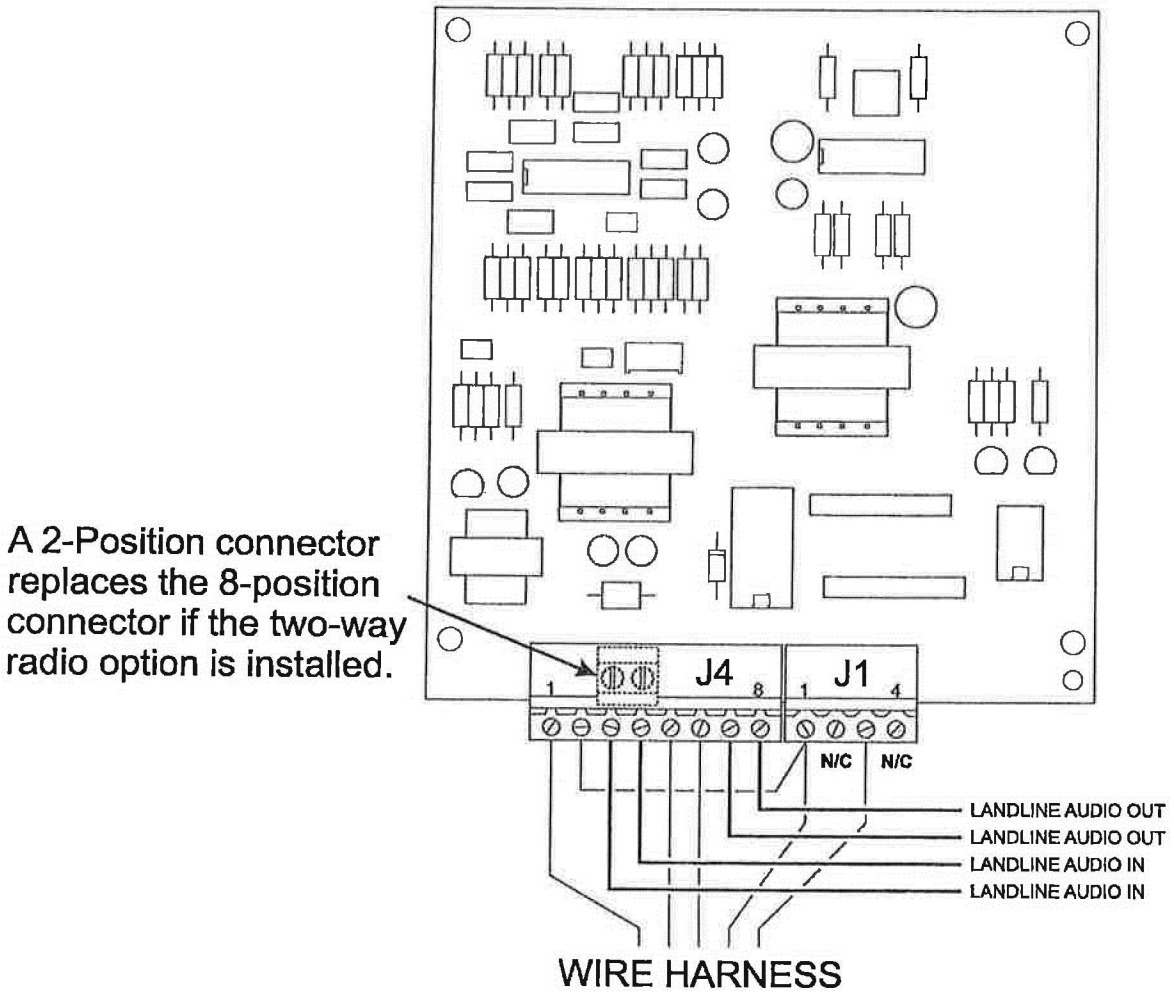

e) Auxiliary Control/Status (optional)

The WPS-2900 may be equipped with an optional module that allows the user to remotely control siren functions and to remotely collect siren status information. The following Whelen commands are supported:

- Cancel (or Clear)
- Wail
- Attack
- Alert
- Public Address
- Air Horn
- Hi/Low
- Whoop
- Noon Test
- Digital Voice Messages (1 - 16)
- Silent Test
- Silent Test Clear
- North*
- East*
- South*
- West*
- Clockwise*
- Counter-Clockwise*
- Strobe On
- Strobe Off

*** = Not available for the WPS-2900**

The following status bits are supported with Normally Open relay closures:

AC	AC Voltage is present
DC	DC Voltage level is good
Partial	At least one amplifier is active
Full	All amplifiers and drivers are active
Rotor	Rotor Active
Intrusion	Intrusion active

In addition to commands and status functions, the Auxiliary Control/Status Option has transformer coupled circuits for accepting audio. One circuit is active in conjunction with the Public Address command, while the other circuit is used for local audio, such as a local microphone or paging system. The local audio must have a "Push To Talk" contact closure for operation. In either case the audio is broadcast over the system.

To activate one of the supported commands, simply make a closure between the desired command input and ground. Typically, a relay is used to make a remote connection. An open collector device may be used, as long as it meets the electrical specifications of this document.

When an input is activated by a momentary closure, the siren function will run for the pre programmed time or until another command is activated. For example, the Cancel command will override a warning tone and silence the siren. Note that if a closure is maintained, it can not be overridden.

The local audio path operates a little differently than the other commands. The "Push To Talk" closure must be maintained for the duration of the command, however, the activation will automatically turn off if held active for more than 8 minutes.

The input cables may be up to 4,000 feet away, based on at least 26 AWG cable. Any audio cable bust be shielded, twisted-pair and grounded at the audio source.

Terminal Block 1 Contact Number	Input Function
1.	Ground
2.	Cancel Command Input
3.	Wail Command Input
4.	Attack Command Input
5.	Alert Command Input
6.	Public Address Command Input
7.	Ground
8.	Air Horn Command Input
9.	Hi/Low Command Input
10.	Whoop Command Input
11.	Noon Test Input
12.	Silent Test Command Input
13.	Ground
14.	Silent Test Clear Input
15.	Message 1 Input
16.	Message 2 Input
17.	Message 3 Input
18.	Message 4 Input
19.	Ground
20.	Message 5 Input
21.	Message 6 Input
22.	Message 7 Input
23.	Message 8 Input

Terminal Block 1 Contact Number	Input Function
24.	Message 9 Input
25.	Ground
26.	Message 10 Input
27.	Message 11 Input
28.	Message 12 Input
29.	Message 13 Input
30.	Message 14 Input
31.	Ground
32.	Message 15 Input
33.	Message 16 Input
34.	North Command Input
35.	East Command Input
36.	South Command Input
37.	Ground
38.	West Command Input
39.	Clockwise Command Input
40.	CCW Command Input
41.	Strobe On Command Input
42.	Strobe Off Command Input
43.	Ground
44.	Remote Audio Input
45.	Remote Audio Input

Terminal Block 2 Contact Number	Function
1.	AC Status N.O.
2.	AC Status N.O.
3.	DC Status N.O.
4.	DC Status N.O.
5.	Partial Status N.O.
6.	Partial Status N.O.

Terminal Block 2 Contact Number	Function
7.	Full Status N.O.
8.	Full Status N.O.
9.	Rotor Status N.O.
10.	Rotor Status N.O.
11.	Intrusion Switch N.O.
12.	Intrusion Switch N.O.

Terminal Block 3 Contact Number	Function
1.	Push To Talk Input
2.	Push To Talk Ground

Terminal Block 3 Contact Number	Function
3.	Local Audio Input
4.	Local Audio Input

Electrical Input Specifications

Minimum Closure Time	**250ms**
Low Level Current (min.):	**35 mA**
High Level Voltage (max):	**32VDC**
Audio Input Level:	**-17 to +10 dB**

Electrical Output Specifications

Minimum Voltage Rating	**24VDC**
Current Rating:	**250 mA**

One (1) wiring harness is supplied to connect the ESC2020 Controller to the Auxiliary Control/Status (AUXCS) Option Board.

A 16-position connector, J1, as well as a 3-position connector, J2, are mounted onto the AUXCS circuit board. J1 controls the status and control functions available in the AUXCS board. J2 controls the PA/audio functions. The single harness comes out of the ESC2020 Controller with an 18-position connector, J11. All of the available functions of the AUXCS board are addressed through this one single harness.

Fig. 18: Auxiliary Control/Status Board Wiring

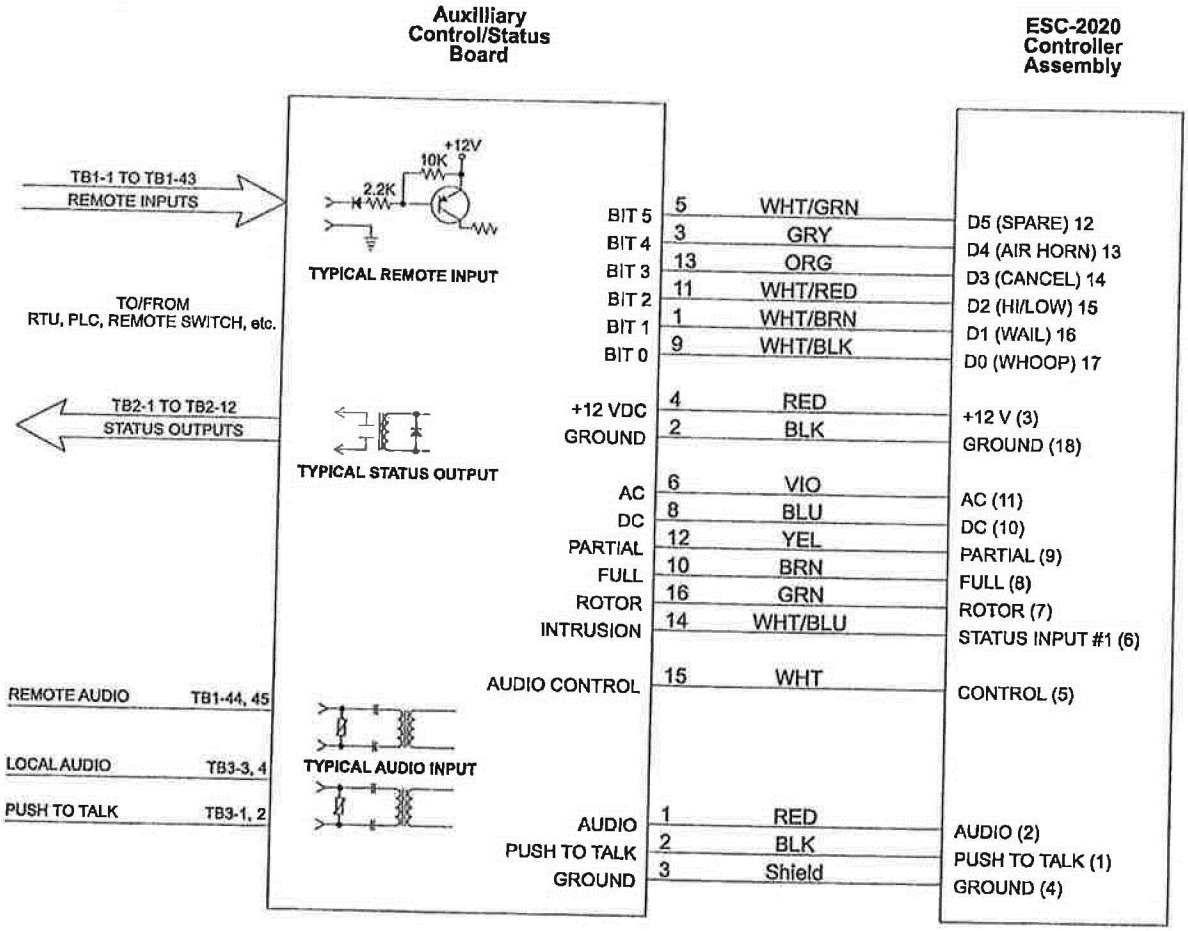

There are three potentiometers for audio level adjustments on the AUXCS board. Refer to the diagram below for the location of these potentiometers.

The potentiometers are factory set for typical signal levels, however, some adjustment may be necessary depending on the actual audio source in the field.

The upper most potentiometer has been calibrated at the factory for a minimum clipping level. THIS POTENTIOMETER SHOULD NOT BE ADJUSTED! The Receive Audio and/ or the Local Audio potentiometers are adjusted until the clipping indicator LED just starts to flicker on. The Local Audio potentiometer is the one toward the rear of the cabinet, while the Receive Audio potentiometer is the one toward the front of the cabinet.

NOTE: The front panel MIC VOLUME control should be set full volume (clockwise) if the AUXCS option is being used.

Fig. 19: Auxiliary Control/Status Potentiometer Locations

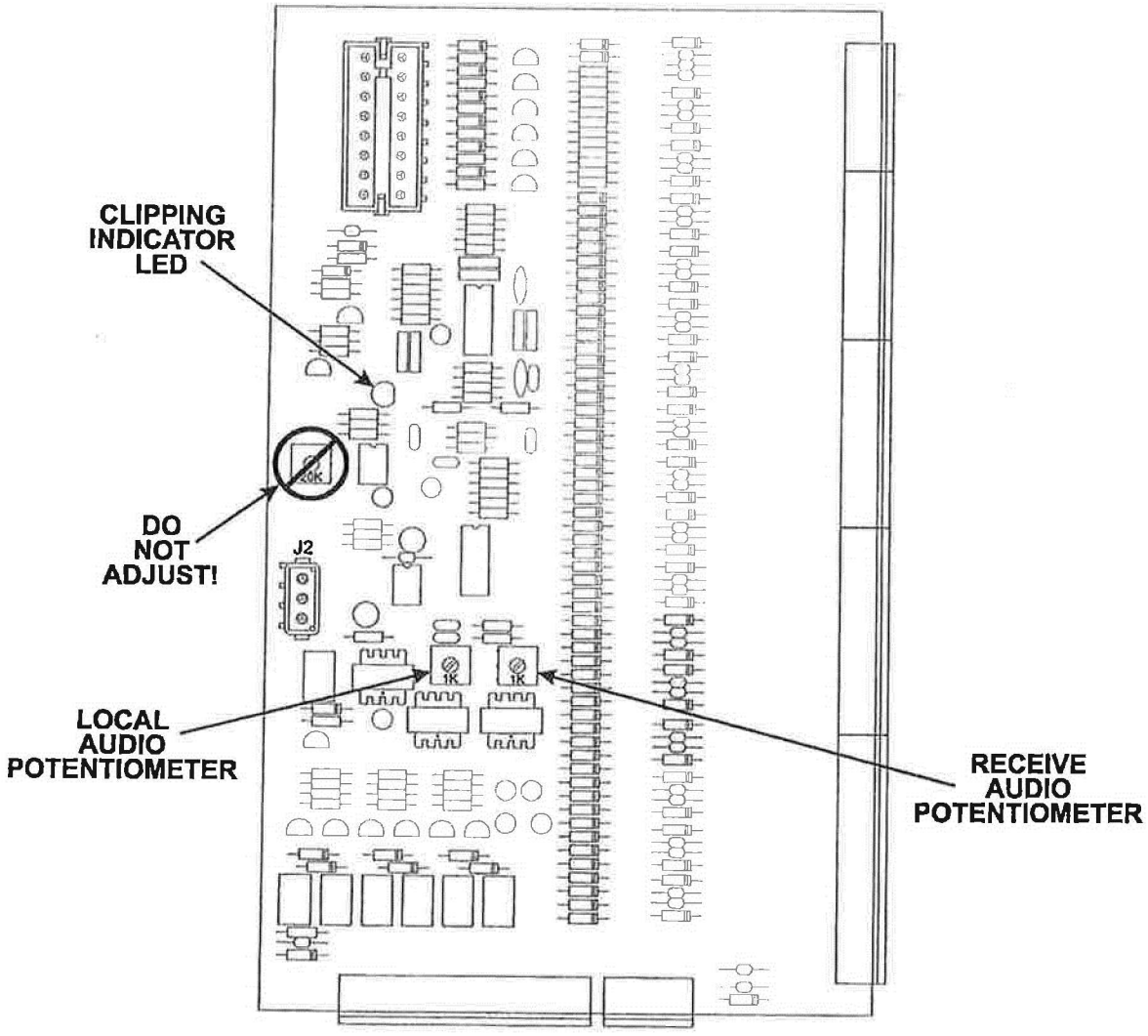

f) Paging Interface (optional)

The WPS-2900 may be equipped with an optional module that allows the user to broadcast siren tones, digital voice messages or public address through existing in-plant public address systems.

The audio output of the Paging Interface Module is a 600 ohm, transformer coupled signal. This output interfaces with most industry standard paging systems. A level adjustment potentiometer allows the user to set the siren output to a desirable level, through the public address system.

The Paging Interface Module also has an output relay that makes a 1 amp rated, contact closure whenever the siren audio is active. This is typically used to perform the in-plant PA microphone "Push-To-Talk" function.

Customer Interface Connection	Output Function	Connector J2 (factory wired)	Input Function
J3-1	Audio Out	1	Bias Input
J3-2	Audio Out	2	PA Relay
		3	Audio In
J1-1	N.O., 1 Amp Contact	4	Audio In
J1-2	N.O., 1 Amp Contact	5	+12VDC
		6	Ground
		7	not used

Fig. 20: Paging Interface Board

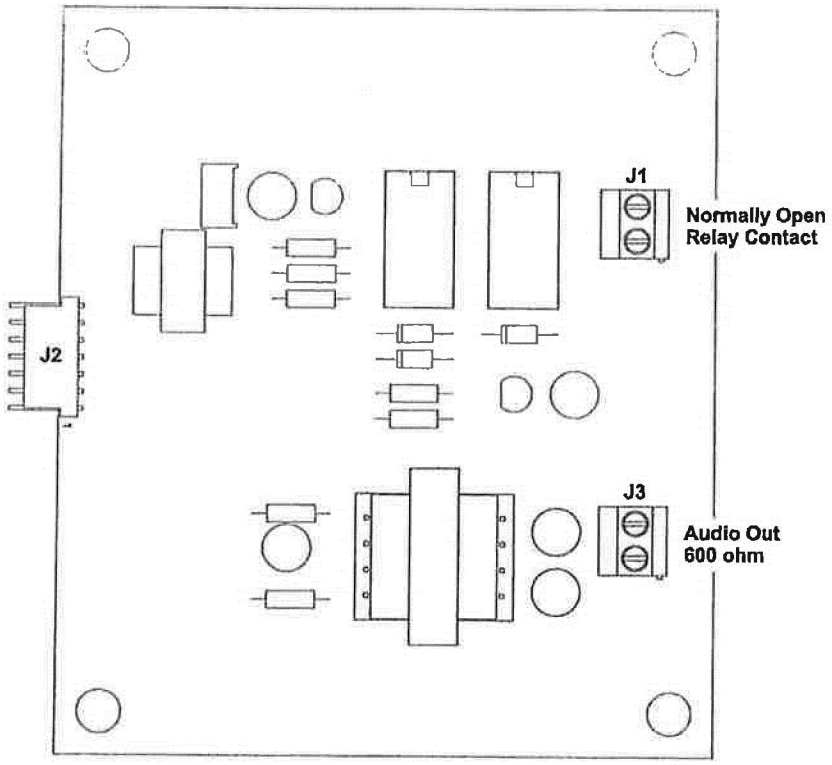

g) Strobe Control Options STCTRL & SCWPS

The WPS-2900 may be equipped with an optional, highly visible external strobe light which upon activation provides a visual indication during siren operation.

The STCTRL includes the strobe control board, cable, hardware for mounting the board to the inside of the cabinet and the mating connector. This board comes complete with all the necessary components to be able to control a strobe using power from inside the cabinet.

The SCWPS provides the same components, strobe control board, cable, mounting hardware and mating connector, but additionally includes a mounting plate (including all necessary hardware) to mount an ISB24 strobe to the top of the siren. The appropriate length of strobe power cable (including connectors) to reach from the top of the siren to the cabinet is also included. Please note that the ISB24 is NOT included and must be purchased separately.

The strobe control board has two functions. The first is to switch 24VDC. The second is to provide a contact closure with a 10A relay. These functions allow for the use of strobe(s) in combination with the siren to activate and operate at the same time.

Fig. 21: Strobe Control Board

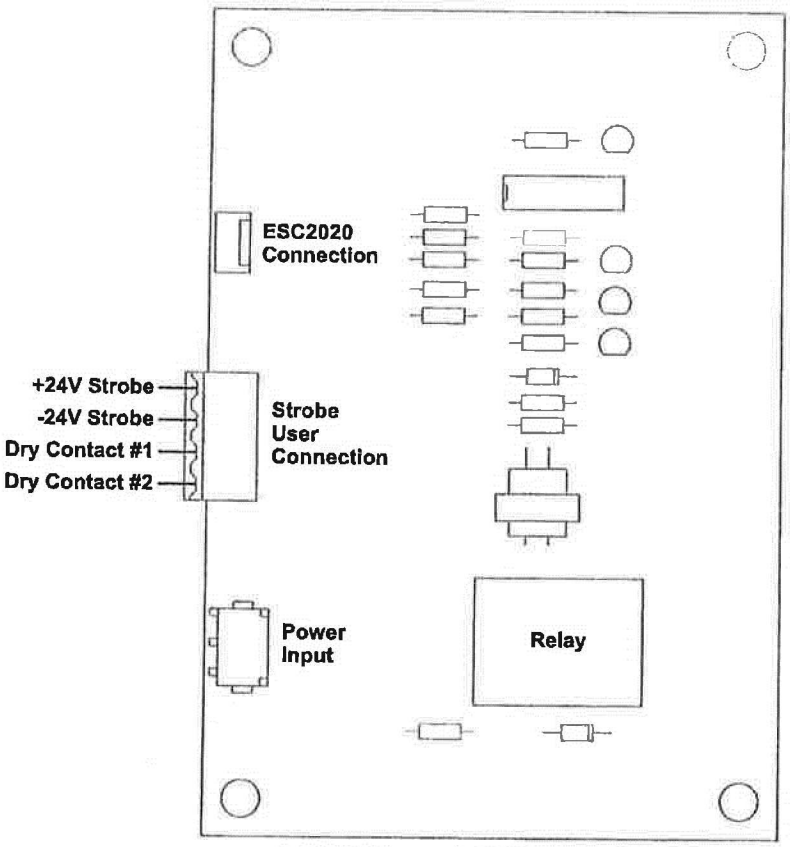

h) Auxiliary Input Board

The WPS-2900 may be equipped with an optional module that can activate siren functions via an external auxiliary input contact closure. For external controls, the "closure" must be at least 1/2 second in duration. The "closure" must be made to ground. A ground contact is supplied at the terminal strip for this purpose. The following Whelen Commands are supported:

- **Cancel (or Clear)**
- **Wail**
- **Attack**
- **Alert**
- **Airhorn**
- **Hi/Low**
- **Whoop**
- **Noon Test**
- **Silent Test**
- **Digital Voice Messages 1 - 4**

Fig. 22: Auxiliary Input Board

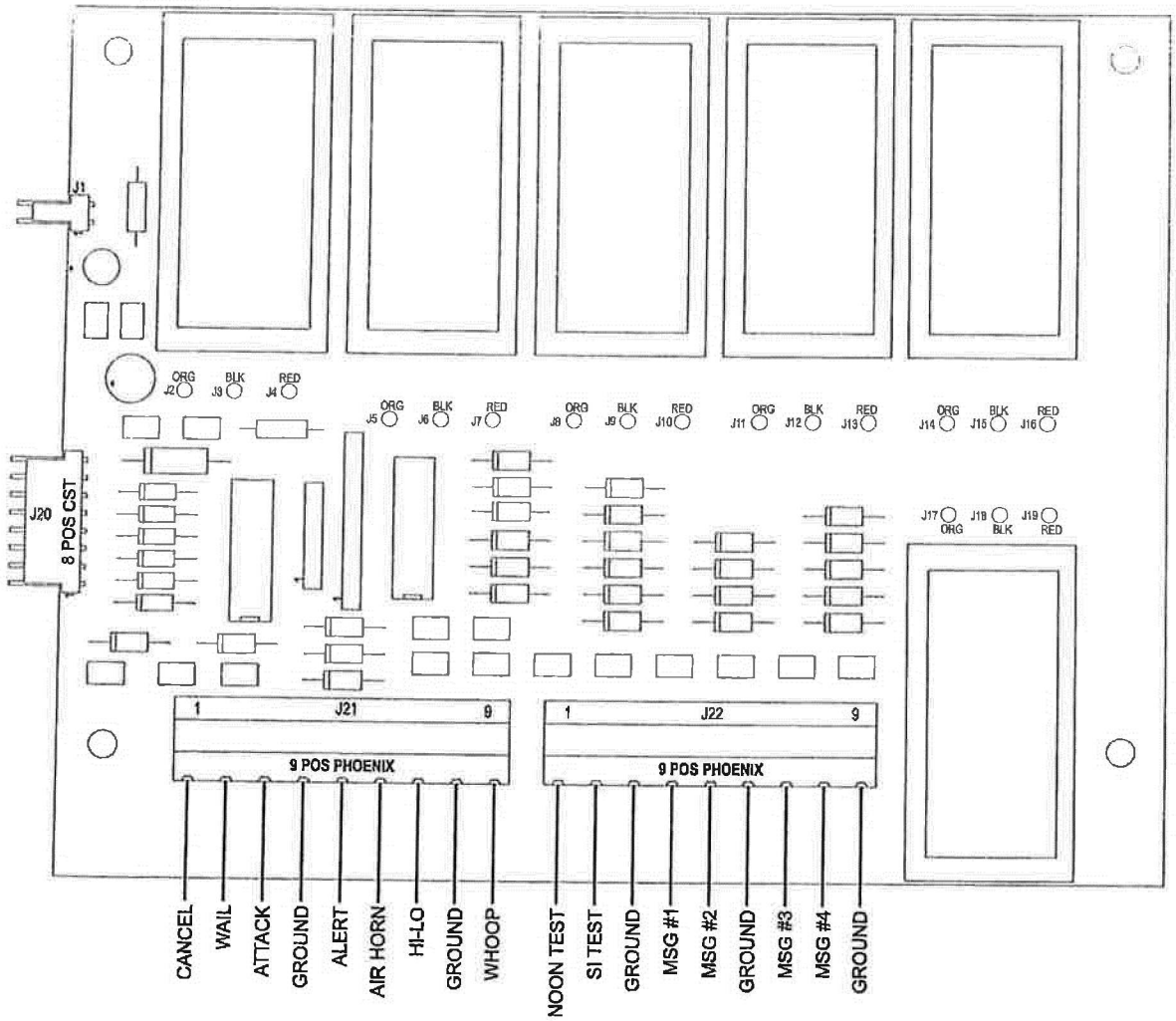

To activate one of the supported commands, simply make a momentary dry closure between the desired command input and ground. Typically, a relay is used to make a remote connection. When an input is activated by a momentary closure, the siren function will run for the pre-programmed time or until another command is activated. For example, the Cancel (or Clear) command will override a warning tone and silence the siren. Note that if a closure is maintained, it can not be overridden.

One harness, one board and 4 mounting screws are supplied with the AUXIN option for connecting to the ESC-2020 Controller. The supplied harness connects from the ESC-2020 controller into an 8 position connector, J20, on the AUXIN board.

NOTE: AUXIN will not work with older ESC-864 controller based sirens.

Auxiliary Input Board Pin-outs

Terminal Block J22 Contact Number	Input Function
1.	Noon Test
2.	Silent Test
3.	Ground
4.	Digital Voice Msg. #1
5.	Digital Voice Msg. #2

Terminal Block J22 Contact Number	Input Function
6.	Ground
7.	Digital Voice Msg. #3
8.	Digital Voice Msg. #4
9.	Ground

Terminal Block J21 Contact Number	Input Function
1.	Cancel (or Clear)
2.	Wail
3.	Attack
4.	Ground
5.	Alert

Terminal Block J21 Contact Number	Input Function
6.	Air Horn
7.	Hi/Low
8.	Ground
9.	Whoop

i) Two-tone Decoder Board

The WPS-2900 may be equipped with an optional module for decoding two-tone frequencies. The two-tone decoder may be equipped with up to six (6) decode modules. The appropriate decode module is factory wired to the appropriate command, provided that information has been supplied to the factory.

The tables on the following page list the timing sequences and tones that are supported by the two-tone decoder. Up to six (6) modules may be used on one decoder board. Any one timing sequence may be used for each module, with the first and second tones always being from the same tone table.

Section V: System Test...

After the installation of the WPS-2900 station has been completed, a basic system check is recommended to confirm that the system is functioning properly. Before initiating these tests, locate the system LED's on the main control board mounted to the cabinet door (see "Fig. 23: System LED Diagnostic Indicators" on page 43).

1. **Confirm that the ACTIVE light on the control board is flashing at a rate of a 1/2 second on and a 1/2 second off.**
2. **Press the SI TEST® button on the siren front panel and check to make sure that all the siren amplifier diagnostic LED's illuminate for 5 seconds. These LED's are located on the front of the cabinet door.**
3. **After the amplifier LED's turn off, check to see if the AC, DC, PARTIAL and FULL LED's are on.**

If one of your amplifier lights did not illuminate during this test then refer to the procedure below to troubleshoot the problem.

This procedure may be used when the Partial or Full LED's indicate a failure.

NOTE: In order for a "Full" indication to be valid, the "Partial" LED must also be on.

1. **Press the SI TEST® button located on the front panel of the electronic cabinet. Each amplifier has a red LED diagnostic indicator that is visible on the front panel (see "Fig. 24: Electronic Cabinet Front Panel (Type II)." on page 44).**
2. **A SI TEST® will cause each amplifier's diagnostic indicator to turn on. If one or more do not turn on, proceed to step 3. If all indicators turn on, the siren amplifiers are functioning properly.**
3. **Open the front panel and remove the speaker driver from the amplifier that did not light and install it onto an amplifier that did light. For example: If amplifier 1 did not light but amplifier 2 did, install speaker 1 on amplifier 2 and speaker 2 on amplifier 1. This will indicate if the failure was with the speaker or the amplifier. For more information on troubleshooting the system, refer to the advanced trouble shooting manual.**

Fig. 24: Electronic Cabinet Front Panel (Type II).

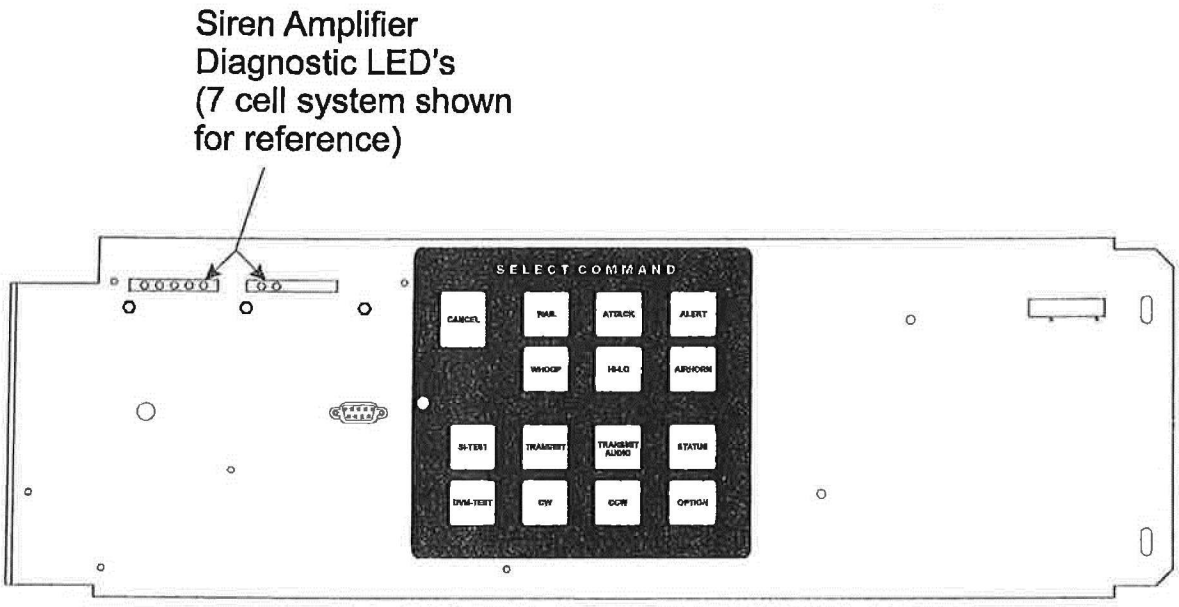

ADVERTISEMENT for BIDS

NOTICE is hereby given that the City Clerk of the City of Hattiesburg, Mississippi, will receive sealed bids until **10:00 a.m. Thursday, July 18, 2013** in the City Clerk's office in the City Hall of said city for furnishing the city's requirement for the following:

MASS NOTIFICATION SYSTEM #6
HATTIESBURG, MISSISSIPPI

Plans, specifications and proposal forms may be obtained from Shows, Dearman and Waits, Inc., P.O. Box 1711, 301 Second Avenue, Hattiesburg, Mississippi, 39403, upon a non-refundable deposit of $50.00. All bids must be accompanied by a bid security equal to five percent (5%) of the amount of the bid in the form of a certified check, cashier's check, or a bid bond written by a company properly licensed in Mississippi.

The successful bidder will be required to furnish a contract bond written by a company licensed in Mississippi. The bond will be in the amount equal to One Hundred Percent (100%) of the contract amount.

Each BID must be received in a sealed envelope which is marked in the lower left-hand corner EXACTLY as follows:

BID:

MASS NOTIFICATION SYSTEM #6
HATTIESBURG, MISSISSIPPI

No bid may be withdrawn for a period of sixty (60) days. The lowest and best proposal received will be accepted, subject to the provisions of Section 31-7-14 of the Mississippi Code of 1972, annotated and amended, and other applicable state law; but the council reserves the right to reject any or all proposals received and to waive informalities.

PUBLISHED by Order of the Council on the 4th day of June, A.D., 2013.

CITY of HATTIESBURG, MISSISSIPPI

BY:_____
Eddie R. Myers, City Clerk

Publish:
June 12, 2013
June 19, 2013

ADVERTISEMENT for BIDS

NOTICE is hereby given that the City Clerk of the City of Hattiesburg, Mississippi, will receive sealed bids until **10:00 a.m. Thursday, July 18, 2013** in the City Clerk's office in the City Hall of said city for furnishing the city's requirement for the following:

MASS NOTIFICATION SYSTEM #6
HATTIESBURG, MISSISSIPPI

Plans, specifications and proposal forms may be obtained from Shows, Dearman and Waits, Inc., P.O. Box 1711, 301 Second Avenue, Hattiesburg, Mississippi, 39403, upon a non-refundable deposit of $50.00. All bids must be accompanied by a bid security equal to five percent (5%) of the amount of the bid in the form of a certified check, cashier's check, or a bid bond written by a company properly licensed in Mississippi.

The successful bidder will be required to furnish a contract bond written by a company licensed in Mississippi. The bond will be in the amount equal to One Hundred Percent (100%) of the contract amount.

Each BID must be received in a sealed envelope which is marked in the lower left-hand corner EXACTLY as follows:

BID:

MASS NOTIFICATION SYSTEM #6
HATTIESBURG, MISSISSIPPI

No bid may be withdrawn for a period of sixty (60) days. The lowest and best proposal received will be accepted, subject to the provisions of Section 31-7-14 of the Mississippi Code of 1972, annotated and amended, and other applicable state law; but the council reserves the right to reject any or all proposals received and to waive informalities.

PUBLISHED by Order of the Council on the 4th day of June, A.D., 2013.

CITY of HATTIESBURG, MISSISSIPPI

BY: Eddie R. Myers

Eddie R. Myers, City Clerk

Publish:
June 12, 2013
June 19, 2013

City of Hattiesburg, MS

200 Forrest St.
P.O. Box 1898
Hattiesburg, MS 39401

Master

File Number: 2013-0308

File ID:	2013-0308	**Type:**	Regular Agenda Item	**Status:**	Agenda Ready
Version:	1	**Reference:**		**In Control:**	City Council
				File Created:	05/28/2013
Brief Title:	CDBG Manual Checks			**Final Action:**	
				Minute Book Number:	MB2013-163

Title:

Approve and authorize issuance of manual checks for CDBG Program Claims per attached memorandum. {Entitlement}

Notes:

Sponsors:		**Enactment Date:**	
Attachments:	MEMORANDUM-Manual Checks-CDBG, CDBG Supporting Docs	**Enactment Number:**	
Contact:		**Meeting Date:**	06/04/2013
Drafter:	Anita Bratcher	**Effective Date:**	

History of Legislative File

Version:	Acting Body:	Date:	Action:	Sent To:	Due Date:	Return Date:	Result:
1	City Council	06/04/2013					

Text of Legislative File 2013-0308

Title

Approve and authorize issuance of manual checks for CDBG Program Claims per attached memorandum. {Entitlement}

Summary

CDBG Manual Checks

Budget Information

Expenditure Type

Purchasing Item

Publication Information

MEMORANDUM

TO: City of Hattiesburg Council Members

FROM: Andrew Ellard
Department of Federal & State Programs

SUBJECT: Authorize issuance of manual checks for CDBG Program claims

DATE: May 28, 2013

The following request for payment is being submitted for approval during the City Council's June 4, 2013 meeting. Please authorize and approve issuance of a manual check for the claims listed below:

Recipient:	**Smith's Remodeling**
Activity:	Rehabilitation
Program:	CDBG
Project Site:	302 Hall Ave.
Amount Requested:	**$2,450.00**
Purpose of Request:	Change Order #3
Work Provided by:	Smith's Remodeling

Recipient:	**Breakthrough Community Services**
Activity:	Emergency Repair
Program:	CDBG
Project Site:	306 JC Killingsworth
Amount Requested:	**$7,500.00**
Purpose of Request:	Final Draw
Work Provided by:	J & J Construction

Attention: Randy Jordan or Andrew Ehlard

SMITH'S REMODELING

OWNER: JOHNNIE L. SMITH
Phone #(601)408-3588

Address: **28 Pine Street**
Hattiesburg, MS 39402

Job Performed For:
The City of Hattiesburg/Maudell Corley
302 Hall Ave.
Hattiesburg, MS 39401

Request: **Change order request for cost to remove pine tree right up against home that's Causing draining issues and has become a safety issue**

Cost\estimate to cut down and remove tree $1,800.00

Cost\estimate to fix drainage problem $650.00

Total cost of change orders $2,450.00

5/23/13

Signature: Johnnie L. Smith

Date: ~~4-25-13~~ 5-23-13

"Breaking the Shackles of Poverty Through Services"

INVOICE

REIMBURSEMENT

Breakthrough Community Services, Inc.
1313 Country Club Road
Hattiesburg, MS 39401
P 601-582-3475
F 601-582-0149

BILL TO:
City of Hattiesburg
Department of Federal & State Programs
P. O. Box 1898, Hattiesburg, MS 39401
Phone: 601.545.4558

Project	Property Address	Invoice	Date
Emergency Repair	306 J C Killingsworth	02	May 24, 2013

Quantity	Description	Unit Price	Total
1	Draw – Final Project Completion	1	7,475.00
1	Project Delivery	1	25.00
			$7,500.00

Make all checks payable to **Breakthrough Community Services, Inc.**

THANK YOU FOR YOUR BUSINESS!

05-28-13A09:53 RCVD

City of Hattiesburg, MS

200 Forrest St.
P.O. Box 1898
Hattiesburg, MS 39401

Master

File Number: 2013-0312

File ID:	2013-0312	**Type:**	Regular Agenda Item	**Status:**	Agenda Ready
Version:	1	**Reference:**		**In Control:**	City Council
				File Created:	05/29/2013
Brief Title:	Claims Docket			**Final Action:**	
				Minute Book Number:	MB2013-163

Title:
Approve Claims Docket for the period ending May 31, 2013.

Notes:

Sponsors:		**Enactment Date:**	
Attachments:	claim 6.4.13	**Enactment Number:**	
Contact:		**Meeting Date:**	
Drafter:	Kermas Eaton	**Effective Date:**	

History of Legislative File

Version:	Acting Body:	Date:	Action:	Sent To:	Due Date:	Return Date:	Result:
1	City Council	06/04/2013					

Text of Legislative File 2013-0312

Title

Approve Claims Docket for the period ending May 31, 2013.

Summary

Claims Docket

Budget Information

Expenditure Type

Purchasing Item

Publication Information

Vendor	Invoice Number	Purchase Order	Claims Number	Item Description	Check Date	Check No.	Check Amount
GENERAL FUND							
00001 AAMCO TRANS/AUTOMOTIVE S	126220	00133574	12005488	A/C REPR U#16650 POLICE	05/31/13	230994	400.00-
AAMCO TRANS/AUTOMOTIVE S							
Sum							400.00-
00001 ADVANCED JANITORIAL SERV	20310 CITY H	00133683	12005577	SERVS 5/13 CITY HALL	05/31/13	230996	1,925.00-
00001 ADVANCED JANITORIAL SERV	20310 TRAFFI	00133683	12005578	SERVS 5/13 TRAFFIC	05/31/13	230996	250.00-
ADVANCED JANITORIAL SERV							
Sum							2,175.00-
00001 AIRGAS USA LLC (NORDAN S	9015705526	00133091	12005417	HELIUM TANKS NATL TRAIN DAY	05/31/13	230999	337.65-
AIRGAS USA LLC (NORDAN S							
Sum							337.65-
00001 ALLBRITTON CHAIN SAW & L	26422	00133427	12005448	RPLCMNT CHAINSAW FORESTRY	05/31/13	231001	679.99-
00001 ALLBRITTON CHAIN SAW & L	26470	00133394	12005493	REPRS U#17532 STREET	05/31/13	231001	138.90-
00001 ALLBRITTON CHAIN SAW & L	26585	00133178	12005563	CONCRETE SAW REPR CONSTR DEPT	05/31/13	231001	286.44-
ALLBRITTON CHAIN SAW & L							
Sum							1,105.33-
00001 ARE CONSULTANTS INC	130402B	00133700	12005590	SERVS PRIEST CRK BANK STABL	05/31/13	231003	5,600.00-
ARE CONSULTANTS INC							
Sum							5,600.00-
00001 AUTO ARMATURE SERVICE IN	0772	00133348	12005393	BATTERY U#15967 POLICE	05/31/13	231005	119.95-
00001 AUTO ARMATURE SERVICE IN	0782	00133407	12005536	STARTER U#5775 CEMETERY	05/31/13	231005	229.95-
AUTO ARMATURE SERVICE IN							
Sum							349.90-
00001 BELK DEPARTMENT STORE	P9356003K00Y	00132851	12005550	CLOTH ALLOW-MCLAURIN-POLICE	05/31/13	231007	184.47-
00001 BELK DEPARTMENT STORE	P9356004800Y	00133324	12005551	CLOTH ALLOW-MCGINTY-POLICE	05/31/13	231007	161.96-
BELK DEPARTMENT STORE							
Sum							346.43-
00001 BOAM	REG-RODGERS	00133715	12005592	REG/DUES-RODGERS	05/31/13	231010	400.00-
BOAM							
Sum							400.00-
00001 BONNER ANALYTICAL TESTIN	52483	00133472	12005435	ASBESTOS ANALYSIS 1215 DEWEY	05/31/13	231013	75.00-
BONNER ANALYTICAL TESTIN							
Sum							75.00-
00001 BROADWAY DRIVE TIRE	087498	00133338	12005394	TIRES POLICE STOCK	05/31/13	231016	1,430.60-
00001 BROADWAY DRIVE TIRE	087263	00132791	12005422	TIRES U#16716 POLICE	05/31/13	231016	771.00-
00001 BROADWAY DRIVE TIRE	087374	00133102	12005423	TIRES U#17574 POLICE	05/31/13	231016	523.36-
00001 BROADWAY DRIVE TIRE	087403	00133152	12005424	TIRES POLICE STOCK	05/31/13	231016	2,616.80-
BROADWAY DRIVE TIRE							

Vendor	Invoice Number	Purchase Order	Claims Number	Item Description	Check Date	Check No.	Check Amount
Sum							5,341.76-
00001 BROWN, CHRISTINE	TRAVEL REIMB	00133581	12005483	EXPNS MPO MEETING JACKSON	05/31/13	231017	66.67-
BROWN, CHRISTINE Sum							66.67-
00001 BRUCE ROSSMEYERS DAYTON	DAMAGE/REPR	00133490	12005426	REPRS ON TURNED IN MTRCYCLES	05/31/13	231019	2,576.00-
BRUCE ROSSMEYERS DAYTON Sum							2,576.00-
00001 CARQUEST AUTO PARTS STOR	14758-6260	00133396	12005445	SHOP TOOLS/PTS CEMETERY	05/31/13	231025	99.42-
00001 CARQUEST AUTO PARTS STOR	14758-5474	00132892	12005512	REPR PTS POLICE STOCK	05/31/13	231025	36.54-
00001 CARQUEST AUTO PARTS STOR	14758-5475	00132892	12005513	REPR PTS POLICE STOCK	05/31/13	231025	164.28-
00001 CARQUEST AUTO PARTS STOR	14758-6180	00133286	12005516	REPR PTS POLICE STOCK	05/31/13	231025	231.40-
00001 CARQUEST AUTO PARTS STOR	14758-6005	00133044	12005527	REPR PTS U#9804 SHOP	05/31/13	231025	31.88-
00001 CARQUEST AUTO PARTS STOR	14758-6177	00133288	12005529	REPR PTS U#17720 SANIT	05/31/13	231025	43.98-
00001 CARQUEST AUTO PARTS STOR	14758-6178	00133288	12005530	REPR PTS U#7870 STREET	05/31/13	231025	10.43-
00001 CARQUEST AUTO PARTS STOR	14758-6179	00133288	12005531	REPR PTS U#14496 STREET	05/31/13	231025	162.81-
00001 CARQUEST AUTO PARTS STOR	14758-6002	00133151	12005533	REPR PTS VARI HEALTH UNITS	05/31/13	231025	12.30-
CARQUEST AUTO PARTS STOR Sum							793.04-
00001 CERTIFIED LABORATORIES	1103325	00133345	12005395	CAR CLEAN SUPP POLICE DEPT	05/31/13	231028	509.25-
00001 CERTIFIED LABORATORIES	1107291	00133344	12005524	FUEL ADDITIVES PUBLIC WORKS	05/31/13	231028	4,769.80-
CERTIFIED LABORATORIES Sum							5,279.05-
00001 CITY OF HATTIESBURG FUND	TRF 3RD MAY	02013498	12005573	TRF 3RD 05/13 PAYROLL	05/29/13	17770	847,298.76-
CITY OF HATTIESBURG FUND Sum							847,298.76-
00001 CNU (CONGRESS/NEW URBANI	MBRSHP-KUYRK	00133701	12005589	MBRSHP KUYRKENDALL 7/13-7/14	05/31/13	231033	125.00-
CNU (CONGRESS/NEW URBANI Sum							125.00-
00001 COBURN'S SUPPLY CO INC	605853037	00133253	12005562	DRAIN PIPE DRAINAGE DEPT	05/31/13	231034	2,757.00-
COBURN'S SUPPLY CO INC Sum							2,757.00-
00001 COMCAST CABLEVISION OF H	095777456110	00133559	12005520	CONVERTER BOX FEE 5/28-6/27	05/31/13	231037	8.76-
00001 COMCAST CABLEVISION OF H	095770734010	00133529	12005534	SERVS 5/20-6/19/13 AIRPORT	05/31/13	231037	85.25-
COMCAST CABLEVISION OF H Sum							94.01-
00001 COMSOUTH	169861	00133439	12005425	SPEAKER MIC-DOLISON-POLICE	05/31/13	231038	89.00-
COMSOUTH Sum							89.00-

Vendor	Invoice Number	Purchase Order	Claims Number	Item Description	Check Date	Check No.	Check Amount
00001 CRAIN TRACTOR & EQUIPMEN	CS84038	00133283	12005397	BLADES/BOLTS STREET STOCK	05/31/13	231044	308.94-
00001 CRAIN TRACTOR & EQUIPMEN	CS84246	00133341	12005398	BLADES/NUTS/BOLTS ST STOCK	05/31/13	231044	236.88-
00001 CRAIN TRACTOR & EQUIPMEN	CS84296	00133530	12005584	REPR PTS STREET STOCK	05/31/13	231044	172.18-
CRAIN TRACTOR & EQUIPMEN							
Sum							718.00-
00001 DEMENT PRINTING COMPANY	0131792-001	00133343	12005414	SPOILED/REJECTED BALLOT ENV	05/31/13	231050	160.00-
DEMENT PRINTING COMPANY							
Sum							160.00-
00001 DILLARDS DEPARTMENT STOR	P9336003F00X	00132661	12005468	CLOTH ALLOW-RUPLE-POLICE	05/31/13	231052	155.99-
00001 DILLARDS DEPARTMENT STOR	P9336003F00X	00132661	12005469	CLOTH ALLOW-RUPLE-POLICE	05/31/13	231052	168.98-
00001 DILLARDS DEPARTMENT STOR	P9336003K00X	00132733	12005470	CLOTH ALLOW-PACK-POLICE	05/31/13	231052	212.05-
00001 DILLARDS DEPARTMENT STOR	P9336003L00X	00132850	12005471	CLOTH ALLOW-MCLAURIN-POLICE	05/31/13	231052	138.00-
00001 DILLARDS DEPARTMENT STOR	P9336003N00X	00132875	12005472	CLOTH ALLOW-HOLLIMAN-POLICE	05/31/13	231052	453.00-
00001 DILLARDS DEPARTMENT STOR	P9336003N00X	00132906	12005473	CLOTH ALLOW-SHORT-POLICE	05/31/13	231052	460.48-
00001 DILLARDS DEPARTMENT STOR	P9336004700X	00133252	12005474	CLOTH ALLOW-PACK-POLICE	05/31/13	231052	16.38-
00001 DILLARDS DEPARTMENT STOR	P9336003D00X	00132640	12005498	CLOTH ALLOW-ROBINSON-POLICE	05/31/13	231052	129.11-
00001 DILLARDS DEPARTMENT STOR	P9336003D00X	00132640	12005499	CLOTH ALLOW-ROBINSON-POLICE	05/31/13	231052	90.00-
DILLARDS DEPARTMENT STOR							
Sum							1,823.99-
00001 ECONOMY SUPPLY CO	191598	00133399	12005443	SUPP AIRPORT MAINT FENCE	05/31/13	231057	65.00-
ECONOMY SUPPLY CO							
Sum							65.00-
00001 ELECTION SYSTEMS & SOFTW	853358	00133017	12005412	ELECTION SUPPLIES	05/31/13	231058	1,249.05-
00001 ELECTION SYSTEMS & SOFTW	853399	00133017	12005413	ELECTION SUPPLIES	05/31/13	231058	397.75-
ELECTION SYSTEMS & SOFTW							
Sum							1,646.80-
00001 FASTENAL COMPANY	MSHAT159961	00133662	12005555	VENDING MACH ITEMS PUB WORKS	05/31/13	231064	242.29-
FASTENAL COMPANY							
Sum							242.29-
00001 FEDERAL EXPRESS	2-227-97306(	00133584	12005477	SERV 3/25/13 M/ADM	05/31/13	231065	23.44-
00001 FEDERAL EXPRESS	2-227-97306(	00133584	12005478	SERV 3/25,3/28 ENGR	05/31/13	231065	32.27-
00001 FEDERAL EXPRESS	2-265-23549	00133584	12005479	SERV 4/29/13 ENGR	05/31/13	231065	17.58-
00001 FEDERAL EXPRESS	2-272-71537	00133584	12005480	SERV 5/8/13 ENGR	05/31/13	231065	27.45-
FEDERAL EXPRESS							
Sum							100.74-
00001 FERGUSON ENTERPRISES INC	1184706	00133207	12005457	PLUMB SUPP-SHOP-MEN'S RESTRM	05/31/13	231066	312.32-
FERGUSON ENTERPRISES INC							
Sum							312.32-
00001 FORD, PHILLIP	PETTY CASH 5	00133487	12005436	PETTY CASH TRAFF/CONSTR/AIRPT	05/31/13	231067	302.61-
FORD, PHILLIP							

Vendor	Invoice Number	Purchase Order	Claims Number	Item Description	Check Date	Check No.	Check Amount
Sum							302.61-
00001 FOREMOST PROMOTIONS	214450	00132909	12005553	FIRE EDUCATION SUPPLIES	05/31/13	231068	1,565.00-
FOREMOST PROMOTIONS							
Sum							1,565.00-
00001 FORREST CTY CHANCERY CLK	PYMT #32	00133467	12005456	MNTHLY ARREARAGE PAYMENT #32	05/31/13	231069	13,798.91-
FORREST CTY CHANCERY CLK							
Sum							13,798.91-
00001 FORREST CTY TAX COLLECTO	PO#133499 5/	00133499	12005454	TITLE FOR NEW MOTORCYCLES	05/31/13	231070	120.00-
FORREST CTY TAX COLLECTO							
Sum							120.00-
00001 FUELMAN OF MS	BG127044 NP3	00133478	12005431	FUEL U#18557 FIRE DEPT	05/31/13	231071	67.00-
00001 FUELMAN OF MS	BG127044 NP3	00133477	12005432	FUEL U#14699 FIRE DEPT	05/31/13	231071	180.78-
00001 FUELMAN OF MS	BG127044 NP3	00133477	12005433	FUEL U#16965 FIRE DEPT	05/31/13	231071	54.08-
00001 FUELMAN OF MS	BG127044 NP3	00133612	12005510	FUEL CHGS 5/13-19 FED/STATE	05/31/13	231071	67.60-
00001 FUELMAN OF MS	BG127044 NP3	00133561	12005514	FUEL CHGS 5/6-12/13 POLICE	05/31/13	231071	19.83-
00001 FUELMAN OF MS	BG127044 NP3	00133622	12005515	FUEL CHGS 5/13-19/13 POLICE	05/31/13	231071	171.71-
00001 FUELMAN OF MS	BG127044 NP3	00133631	12005523	FUEL CHGS 5/13-19 FIRE DEPT	05/31/13	231071	211.27-
FUELMAN OF MS							
Sum							772.27-
00001 G & K SERVICES	1035378103	00133658	12005558	UNIFORMS/MOP 5/07 ENGR	05/31/13	231072	8.90-
00001 G & K SERVICES	1035380196	00133658	12005559	UNIFORMS/MOP 5/14 ENGR	05/31/13	231072	8.90-
00001 G & K SERVICES	1035382328	00133658	12005560	UNIFORMS/MOP 5/21 ENGR	05/31/13	231072	8.90-
00001 G & K SERVICES	103538442	00133658	12005561	UNIFORMS/MOP 5/28 ENGR	05/31/13	231072	8.90-
G & K SERVICES							
Sum							35.60-
00001 GARNER LUMLEY ELECTRIC S	487973	00133420	12005396	WIRING-FIRE MECHANIC WELDER	05/31/13	231074	137.94-
00001 GARNER LUMLEY ELECTRIC S	486200	00132100	12005455	WIRING PTS-TRAILER-P/F ACDMY	05/31/13	231074	174.30-
GARNER LUMLEY ELECTRIC S							
Sum							312.24-
00001 GILKEY ELECTRIC SUPPLY C	245036	00132962	12005564	ELEC SUPP SANIT OFFC RENOVA	05/31/13	231076	170.87-
GILKEY ELECTRIC SUPPLY C							
Sum							170.87-
00001 GLADDEN LAW OFFICE PLLC	10323	00133660	12005544	SERV 4/8-5/4 LIGHTHOUSE RESQ	05/31/13	231078	2,454.15-
00001 GLADDEN LAW OFFICE PLLC	10324	00133660	12005545	SERV 3/28-5/17 PEARSON FIREWK	05/31/13	231078	5,196.29-
00001 GLADDEN LAW OFFICE PLLC	10321	00133660	12005546	SERV 4/10-5/17 MIDTOWN	05/31/13	231078	147.00-
00001 GLADDEN LAW OFFICE PLLC	10322	00133660	12005547	SERV 3/30-4/19 LAMAR/THAMES	05/31/13	231078	385.00-
GLADDEN LAW OFFICE PLLC							
Sum							8,182.44-
00001 H'BURG COCA COLA BOTTLIN	56102032168	00133418	12005476	BOTTLED WATER COUNCIL OFFICE	05/31/13	231083	35.00-

Vendor	Invoice Number	Purchase Order	Claims Number	Item Description	Check Date	Check No.	Check Amount
H'BURG COCA COLA BOTTLIN							
Sum							35.00-
00001 H'BURG PAINT AND DECORAT	WO116791	00133321	12005420	PAINT SUPP POLICE DEPT	05/31/13	231084	41.96-
00001 H'BURG PAINT AND DECORAT	WO116885	00133392	12005421	PAINT SUPP POL MEMORIAL DAY	05/31/13	231084	85.95-
H'BURG PAINT AND DECORAT							
Sum							127.91-
00001 HALSEN PRODUCTS COMPANY	0118484-IN	00133416	12005535	SAFETY EQUIP CEM/FORESTRY	05/31/13	231085	693.64-
HALSEN PRODUCTS COMPANY							
Sum							693.64-
00001 HATTIESBURG HIGH BAND BO	DAMAGE DEP R	02013495	12005571	DAMAGE DEPOSIT REFUND	05/31/13	231088	300.00-
HATTIESBURG HIGH BAND BO							
Sum							300.00-
00001 HILL, LEROY COFFEE CO IN	14420	00133551	12005504	COFFEE SERV M/ADM	05/31/13	231091	57.68-
HILL, LEROY COFFEE CO IN							
Sum							57.68-
00001 INDOFF INC	2276356	00133070	12005428	JANIT SUPP P/F ACADEMY	05/31/13	231095	174.48-
00001 INDOFF INC	2279201	00133070	12005429	JANIT SUPP P/F ACADEMY	05/31/13	231095	47.99-
00001 INDOFF INC	2282051	00133410	12005581	JANIT SUPP P/F ACADEMY	05/31/13	231095	60.84-
00001 INDOFF INC	2282101	00133410	12005582	JANIT SUPP P/F ACADEMY	05/31/13	231095	41.59-
INDOFF INC							
Sum							324.90-
00001 INGRAM EQUIPMENT CO LLC	0017552-IN	00133103	12005401	REPR PTS SANIT STOCK	05/31/13	231097	223.98-
00001 INGRAM EQUIPMENT CO LLC	0016270-IN F	00129184	12005407	FREIGHT CHGS	05/31/13	231097	17.35-
00001 INGRAM EQUIPMENT CO LLC	15604CM-CM	00126807	12005408	CREDIT	05/31/13	231097	298.88
00001 INGRAM EQUIPMENT CO LLC	0016556-IN	00130011	12005409	REPR PTS SANIT STOCK	05/31/13	231097	214.96-
INGRAM EQUIPMENT CO LLC							
Sum							157.41-
00001 INTERFACE SECURITY SYSTE	16763602	00133661	12005566	SECURITY 6/13 HILND CEMETERY	05/31/13	231098	31.45-
INTERFACE SECURITY SYSTE							
Sum							31.45-
00001 INTL SOCIETY OF ARBORICU	473447	00133244	12005444	MFC GRANT ED MATLS CEMETERY	05/31/13	231099	382.35-
00001 INTL SOCIETY OF ARBORICU	473447 FRT	00133335	12005447	FREIGHT CHGS PO#133244	05/31/13	231099	51.08-
INTL SOCIETY OF ARBORICU							
Sum							433.43-
00001 JACKSON, JOHNNY	TRAVEL REIMB	00133590	12005489	EXPNS LEADERSHIP SKILLS/FIRE	05/31/13	231103	24.59-
JACKSON, JOHNNY							
Sum							24.59-
00001 JACKSON, ROOSEVELT III	123129	00133485	12005567	PAINT BLDGS HILND CEMETERY	05/31/13	231104	4,300.00-

Vendor	Invoice Number	Purchase Order	Claims Number	Item Description	Check Date	Check No.	Check Amount
JACKSON, ROOSEVELT III							
Sum							4,300.00-
00001 JET CONSTRUCTION	1613	00133255	12005537	TOPSOIL-CEMETERY	05/31/13	231107	2,688.00-
JET CONSTRUCTION							
Sum							2,688.00-
00001 JOHNNY'S WRECKER SERVICE	21784	00133534	12005583	TOWING U#9927 FIRE DEPT	05/31/13	231108	450.00-
JOHNNY'S WRECKER SERVICE							
Sum							450.00-
00001 KENTWOOD SPRINGWATER	916732	00133624	12005518	DRINKING WATER POLICE DEPT	05/31/13	231115	154.35-
KENTWOOD SPRINGWATER							
Sum							154.35-
00001 KRONOS INCORPORATED	10759394	00132169	12005500	TIME/ATTENDANCE SOFTWARE	05/31/13	231120	1,000.00-
00001 KRONOS INCORPORATED	10762657	00132169	12005501	TIME/ATTENDANCE SOFTWARE	05/31/13	231120	23,324.00-
KRONOS INCORPORATED							
Sum							24,324.00-
00001 LAMAR PARK WATER & SEWER	3RD INSTLMNT	00133670	12005549	DAMAGE CLAIM SETTLEMENT	05/31/13	231121	25,000.00-
LAMAR PARK WATER & SEWER							
Sum							25,000.00-
00001 LANCASTER'S MACHINE & WE	21246	00133364	12005400	REPRS U#16201 STREET	05/31/13	231122	566.00-
00001 LANCASTER'S MACHINE & WE	21256	00133337	12005404	REPRS U#14408 SANIT	05/31/13	231122	942.00-
00001 LANCASTER'S MACHINE & WE	21264	00133533	12005525	REPRS U#11356 STREET	05/31/13	231122	228.00-
LANCASTER'S MACHINE & WE							
Sum							1,736.00-
00001 LAWRENCE PRINTING CO INC	61581	00133457	12005575	GENERAL ELECTION BALLOTS 6/4	05/31/13	231125	2,008.00-
LAWRENCE PRINTING CO INC							
Sum							2,008.00-
00001 LORMAN EDUCATION SERVICE	2703562-2	00133684	12005580	POLICE LIABILITY MANUAL/CD	05/31/13	231129	107.95-
LORMAN EDUCATION SERVICE							
Sum							107.95-
00001 MARRIOTT JACKSON (200 AM	4601 C BROWN	00133196	12005452	BROWN-MPO MEETING-JACKSON	05/31/13	231131	200.49-
00001 MARRIOTT JACKSON (200 AM	4602 MCLAUGH	00133196	12005453	MCLAUGHLIN-MPO MEET-JACKSON	05/31/13	231131	200.49-
MARRIOTT JACKSON (200 AM							
Sum							400.98-
00001 MCCAIN UNIFORMS	250751-1	00131506	12005385	TROUSERS/BOOTS LATERAL OFFCRS	05/31/13	231132	442.00-
00001 MCCAIN UNIFORMS	251970-1	00131506	12005386	TROUSERS/BOOTS LATERAL OFFCRS	05/31/13	231132	195.00-
00001 MCCAIN UNIFORMS	255822-1	00131506	12005387	TROUSERS/BOOTS LATERAL OFFCRS	05/31/13	231132	858.00-

Vendor	Invoice Number	Purchase Order	Claims Number	Item Description	Check Date	Check No.	Check Amount
MCCAIN UNIFORMS							
Sum							1,495.00-
00001 MCELHANEY PLUMBING INC	207033	00133400	12005416	PLUMB SUPP MAYOR'S RESTROOM	05/31/13	231134	79.85-
00001 MCELHANEY PLUMBING INC	206803	00133445	12005450	WATER COOLER 1ST FLR C HALL	05/31/13	231134	578.75-
00001 MCELHANEY PLUMBING INC	207331	00133486	12005565	HAND TOOLS AIRPORT MAINT	05/31/13	231134	71.70-
MCELHANEY PLUMBING INC							
Sum							730.30-
00001 MCMULLAN EQUIPMENT CO	147905	00133573	12005484	REPR PTS POLICE STOCK	05/31/13	231136	104.25-
00001 MCMULLAN EQUIPMENT CO	147943P	00133573	12005485	REPR PTS POLICE STOCK	05/31/13	231136	343.31-
00001 MCMULLAN EQUIPMENT CO	147972P	00133573	12005486	REPR PTS POLICE STOCK	05/31/13	231136	165.00-
MCMULLAN EQUIPMENT CO							
Sum							612.56-
00001 MEGAGATE	205876-00 4/	00133688	12005576	INTERNET/NETWORK 5/13 INFO T	05/31/13	231139	14,344.43-
MEGAGATE							
Sum							14,344.43-
00001 MID SOUTH UNIFORM & SUPP	498295	00131512	12005388	L/S SHIRTS LATERAL OFFICERS	05/31/13	231141	930.00-
MID SOUTH UNIFORM & SUPP							
Sum							930.00-
00001 MIKE'S TIRE & WHEEL CO	2167286	00133372	12005406	TIRES CEMETERY TRAILER	05/31/13	231142	274.16-
MIKE'S TIRE & WHEEL CO							
Sum							274.16-
00001 MISS MISSISSIPPI CORP	226	00132098	12005505	SPONSORSHP-PAGE-MISS RIVERLND	05/31/13	231146	300.00-
MISS MISSISSIPPI CORP							
Sum							300.00-
00001 MITCHELL TOOL SALES & SE	86892	00133008	12005439	CONCRETE BLADE CONSTR DEPT	05/31/13	231147	279.00-
MITCHELL TOOL SALES & SE							
Sum							279.00-
00001 MS DEPT OF INFORMATION T	IN 801 ISH19	00133672	12005548	SERVS TIME KEEPING SOFTWARE	05/31/13	231149	435.00-
MS DEPT OF INFORMATION T							
Sum							435.00-
00001 MS POWER COMPANY	5/13 GENERAL	00201316	12005568	MNTHLY ELEC-GENERAL	05/31/13	231150	105,038.10-
MS POWER COMPANY							
Sum							105,038.10-
00001 MS STATE/TAX COMM/UNDERC	PO#133442 5/	00133442	12005517	TAG U#17708 POLICE DEPT	05/31/13	231151	16.00-
MS STATE/TAX COMM/UNDERC							
Sum							16.00-

Vendor	Invoice Number	Purchase Order	Claims Number	Item Description	Check Date	Check No.	Check Amount
00001 MULTITECH OFFICE MACHINE	13050769	00133542	12005507	PRINTER SUPP INFO TECH	05/31/13	231152	99.95-
MULTITECH OFFICE MACHINE Sum							99.95-
00001 NAPA AUTO PARTS	490173	00133430	12005492	REPR PTS STREET STOCK	05/31/13	231153	127.44-
00001 NAPA AUTO PARTS	489379	00133074	12005526	BRAKE REPR PTS U#17503 ENGR	05/31/13	231153	295.68-
NAPA AUTO PARTS Sum							423.12-
00001 NEEL-SCHAFFER INC	1009989-99 C	00133649	12005557	SERV 3/1-31 GRANT APPLICATION	05/31/13	231154	1,002.82-
NEEL-SCHAFFER INC Sum							1,002.82-
00001 NEWELL PAPER COMPANY	562291	00133211	12005384	JANIT SUPP POLICE DEPT	05/31/13	231155	1,669.50-
00001 NEWELL PAPER COMPANY	562135	00133218	12005481	JANIT SUPP ACCTG/PURCH	05/31/13	231155	181.00-
00001 NEWELL PAPER COMPANY	562674	00133218	12005482	JANIT SUPP ACCTG/PURCH	05/31/13	231155	68.00-
NEWELL PAPER COMPANY Sum							1,918.50-
00001 NICHOLSON & COMPANY PLLC	164432	02013471	12005410	FINAL BILLING '11-'12 AUDIT	05/31/13	231156	11,425.57-
NICHOLSON & COMPANY PLLC Sum							11,425.57-
00001 OFFICE DEPOT INC	1570867555	00132671	12005418	CABINETS PRISONERS BELONGINGS	05/31/13	231157	161.99-
00001 OFFICE DEPOT INC	1576013347	00132671	12005419	CABINETS PRISONERS BELONGINGS	05/31/13	231157	161.99-
00001 OFFICE DEPOT INC	1577848215	00133367	12005552	TOTE BAG POLICE MEMORIAL DAY	05/31/13	231157	53.99-
00001 OFFICE DEPOT INC	656851858001	00133147	12005585	OFFICE SUPP ENGR DEPT	05/31/13	231157	94.13-
00001 OFFICE DEPOT INC	656851859001	00133147	12005586	OFFICE SUPP ENGR DEPT	05/31/13	231157	32.27-
00001 OFFICE DEPOT INC	656851860001	00133147	12005587	OFFICE SUPP ENGR DEPT	05/31/13	231157	4.13-
OFFICE DEPOT INC Sum							508.50-
00001 PEANUTS TOWING SERVICE	63208	00133468	12005427	TOWING U#17578 POLICE	05/31/13	231160	65.00-
00001 PEANUTS TOWING SERVICE	62898	00133464	12005440	TOWING U#10690 CONSTR	05/31/13	231160	126.00-
00001 PEANUTS TOWING SERVICE	63315	00133623	12005521	TOWING U#17570,U#17574 POLICE	05/31/13	231160	130.00-
PEANUTS TOWING SERVICE Sum							321.00-
00001 PEARL RIVER VALLEY EPA (	5/13 GENERAL	00201316	12005569	MNTHLY 5/13 PUBLIC SERVICES	05/31/13	231161	498.66-
PEARL RIVER VALLEY EPA (Sum							498.66-
00001 PINE BELT OIL COMPANY IN	1010661	00133497	12005475	WEEKLY GAS,DIESEL PUB WORKS	05/31/13	231162	24,787.98-
PINE BELT OIL COMPANY IN Sum							24,787.98-
00001 PINE BELT TROPHY	PO#133428 5/	00133428	12005392	PLAQUE-JUDGE GAMBRELL	05/31/13	231163	116.25-

Vendor	Invoice Number	Purchase Order	Claims Number	Item Description	Check Date	Check No.	Check Amount
PINE BELT TROPHY							
Sum							116.25-
00001 PITMAN COMPANY	4233004-00	00133535	12005556	PLOTTER PAPER ENGR DEPT	05/31/13	231164	409.79-
PITMAN COMPANY							
Sum							409.79-
00001 POLICE EQUIPMENT WORLDWI	4743	00132308	12005389	MTRCYCLE PANTS-HOLMES	05/31/13	231166	520.85-
00001 POLICE EQUIPMENT WORLDWI	4742	00132319	12005390	MTRCYCLE PANTS-MATOS	05/31/13	231166	520.85-
POLICE EQUIPMENT WORLDWI							
Sum							1,041.70-
00001 PRESLEY, PAUL E	TRAVEL REIMB	00133592	12005490	EXPNS LEADERSHIP SKILLS/FIRE	05/31/13	231169	131.31-
PRESLEY, PAUL E							
Sum							131.31-
00001 PRO TRAVEL INC	US/GPT5IT DU	00133484	12005411	DUPREE-NLC YTH CNF WASHINGTON	05/31/13	231170	312.80-
PRO TRAVEL INC							
Sum							312.80-
00001 RJ YOUNG COMPANY	340507	00133403	12005506	PRINTER SUPP-COLEMAN	05/31/13	231176	192.00-
RJ YOUNG COMPANY							
Sum							192.00-
00001 RODGERS, WILLIAM F JR	TRAV ADVANCE	00133713	12005591	TRAV ADV-BOAM CONF-GULFPORT	05/31/13	231178	664.00-
RODGERS, WILLIAM F JR							
Sum							664.00-
00001 ROPER SUPPLY CO LLC	43817	00133435	12005554	REPR PTS U#17528 TRAFFIC	05/31/13	231179	268.40-
ROPER SUPPLY CO LLC							
Sum							268.40-
00001 SACKS OUTDOOR SUPPLY	PO#133376 5/	00133376	12005391	CLOTH ALLOW-SIMS-POLICE	05/31/13	231182	74.94-
00001 SACKS OUTDOOR SUPPLY	17022	00133544	12005496	CLOTH ALLOW-EASTERLING	05/31/13	231182	459.59-
SACKS OUTDOOR SUPPLY							
Sum							534.53-
00001 SCHWANDT, MARILYN T	PETTY CASH 5	00133630	12005503	PETTY CASH VARI DEPTS	05/31/13	231185	213.15-
SCHWANDT, MARILYN T							
Sum							213.15-
00001 SHOWS DEARMAN & WAITS IN	17467	00133699	12005588	SERVS 4/13 TORNADO RECOVERY	05/31/13	231190	52,810.00-
SHOWS DEARMAN & WAITS IN							
Sum							52,810.00-
00001 SIGNS FIRST	H-39773	00130140	12005494	SIGNS FOR PUBLIC WORKS DOORS	05/31/13	231191	64.96-

Vendor	Invoice Number	Purchase Order	Claims Number	Item Description	Check Date	Check No.	Check Amount
SIGNS FIRST							
Sum							64.96-
00001 SOLAR SUPPLY INC	0562216	00133393	12005519	A/C FILTERS/SUPP POLICE DEPT	05/31/13	231194	817.85-
00001 SOLAR SUPPLY INC	3442377	00132952	12005528	ELEC SUPP-STORAGE FAN-CONSTR	05/31/13	231194	341.74-
SOLAR SUPPLY INC							
Sum							1,159.59-
00001 SOUTHERN FINANCIAL SYSTE	CMCHAT 4/3/1	02013489	12005540	POLICE FINES COLL.FEE	05/31/13	231196	159.25-
00001 SOUTHERN FINANCIAL SYSTE	CMCHAT2 4/3/	02013490	12005541	POLICE FINES COLL.FEE	05/31/13	231196	431.36-
00001 SOUTHERN FINANCIAL SYSTE	CMCHAT2 4/16	02013491	12005542	POLICE FINES COLL.FEE	05/31/13	231196	225.00-
SOUTHERN FINANCIAL SYSTE							
Sum							815.61-
00001 SOUTHERN PINE ELECTRIC P	5/13 GENERAL	00201316	12005539	MNTHLY 5/13 PUBLIC SERVICES	05/31/13	231198	64.52-
SOUTHERN PINE ELECTRIC P							
Sum							64.52-
00001 SOUTHERN PINES ANIMAL SH	6/13	00133465	12005442	HANDLING,HOUSING 6/13	05/31/13	231199	9,374.00-
SOUTHERN PINES ANIMAL SH							
Sum							9,374.00-
00001 SOUTHERN PIPE & SUPPLY C	6617773-00	00133169	12005508	A/C REPR PTS CDBG DEPT	05/31/13	231200	429.00-
SOUTHERN PIPE & SUPPLY C							
Sum							429.00-
00001 SOUTHERN TIRE MART LLC	11073467	00132991	12005434	TIRE CHANGE U#8943,13560 FIRE	05/31/13	231201	295.00-
00001 SOUTHERN TIRE MART LLC	11073644	00133025	12005441	TIRES/REPRS SANIT STOCK	05/31/13	231201	1,827.50-
00001 SOUTHERN TIRE MART LLC	11074142	00133285	12005458	TIRES SANIT STOCK	05/31/13	231201	1,696.00-
SOUTHERN TIRE MART LLC							
Sum							3,818.50-
00001 SOUTHERN TRACTOR (H'BURG	4461949	00133282	12005399	BLADES/HARDWARE KITS-STREET	05/31/13	231202	658.60-
SOUTHERN TRACTOR (H'BURG							
Sum							658.60-
00001 SOUTHWEST PROMOTIONAL SO	2397	00132495	12005522	RECRUIT/PUBLICITY SUPP-ACDMY	05/31/13	231204	509.00-
SOUTHWEST PROMOTIONAL SO							
Sum							509.00-
00001 STANDARD OFFICE SUPPLY C	0034791-001	00133342	12005383	ELECTION SUPPLIES	05/31/13	231206	75.35-
00001 STANDARD OFFICE SUPPLY C	0034705-001	00133217	12005415	OFFICE SUPP ACCTG DEPT	05/31/13	231206	231.31-
00001 STANDARD OFFICE SUPPLY C	0034903-001	00133072	12005449	CREDIT	05/31/13	231206	89.88
00001 STANDARD OFFICE SUPPLY C	0034833-001	00133406	12005451	OFFICE CHAIR TRAIN DEPOT	05/31/13	231206	239.99-
00001 STANDARD OFFICE SUPPLY C	0035005-001	00133553	12005491	FIRE CODE CITATION BOOKS	05/31/13	231206	352.00-
00001 STANDARD OFFICE SUPPLY C	0034336-001	00132715	12005543	ACCTS PAYABLE CHECK ENVELOPES	05/31/13	231206	276.68-
00001 STANDARD OFFICE SUPPLY C	0034907-001	00133458	12005574	OFFICE SUPP MUN COURT	05/31/13	231206	274.98-
00001 STANDARD OFFICE SUPPLY C	0035070-001	00133599	12005579	COPY PAPER POLICE DEPT	05/31/13	231206	720.00-

Vendor	Invoice Number	Purchase Order	Claims Number	Item Description	Check Date	Check No.	Check Amount
STANDARD OFFICE SUPPLY C							
Sum							2,080.43-
00001 STATE FIRE ACADEMY	20728 CROWEL	00133473	12005430	REG-CROWELL-ROPE RESCUE CLASS	05/31/13	231207	60.00-
STATE FIRE ACADEMY							
Sum							60.00-
00001 STUART, JESSICA (REFUNDS	DAMAGE DEP R	02013495	12005572	DAMAGE DEPOSIT REFUND	05/31/13	231208	500.00-
STUART, JESSICA (REFUNDS							
Sum							500.00-
00001 THOMPSON ENGINEERING	13042720	00133550	12005509	SERVS TWIN FORKS RISING PH II	05/31/13	231210	16,656.29-
THOMPSON ENGINEERING							
Sum							16,656.29-
00001 TRUCK SERVICE & EQUIPMEN	311733	00133336	12005497	REPRS U#13024 FORESTRY	05/31/13	231214	2,891.84-
TRUCK SERVICE & EQUIPMEN							
Sum							2,891.84-
00001 TRUCKPRO INC	039-0526891	00133433	12005532	REPR PTS U#17723 SANIT	05/31/13	231215	450.87-
TRUCKPRO INC							
Sum							450.87-
00001 UNDERWOOD'S SMALL ENGINE	44616	00132949	12005446	MOWER TIRES CEMETERY	05/31/13	231217	383.80-
UNDERWOOD'S SMALL ENGINE							
Sum							383.80-
00001 UNITED PARCEL SERVICE IN	00008E1Y1520	00133589	12005487	SHIP CHGS 4/24/13 POLICE DEPT	05/31/13	231218	18.16-
UNITED PARCEL SERVICE IN							
Sum							18.16-
00001 WAL-MART STORES INC	005977	00133194	12005459	SUPP NATL TRAIN DAY 5/11/13	05/31/13	231224	100.55-
00001 WAL-MART STORES INC	002845	00132571	12005460	EQUIP BATTERIES RISK MGMT	05/31/13	231224	98.73-
00001 WAL-MART STORES INC	002028	00133187	12005461	SUPP MAYOR'S FINANCIAL ED	05/31/13	231224	76.36-
00001 WAL-MART STORES INC	005976	00133230	12005462	SUPP NATL TRAIN DAY 5/11/13	05/31/13	231224	60.30-
00001 WAL-MART STORES INC	002697 & 001	00133184	12005463	REFRSHMNTS POL MEMORIAL DAY	05/31/13	231224	451.33-
00001 WAL-MART STORES INC	008794	00132592	12005464	KITCHEN SUPP #3 FIRE STA	05/31/13	231224	321.02-
00001 WAL-MART STORES INC	006282	00132783	12005465	MICROWAVE #8 FIRE STA	05/31/13	231224	165.00-
00001 WAL-MART STORES INC	007074	00132793	12005466	PRINTER FIRE PREV OFFICE	05/31/13	231224	128.88-
WAL-MART STORES INC							
Sum							1,402.17-
00001 WARREN PAVING INC	13002MB	00133040	12005502	CRUSHED CONCRETE-STREET	05/31/13	231227	2,690.82-
WARREN PAVING INC							
Sum							2,690.82-
00001 WASTE MANAGEMENT OF SOUT	006598-2526-	00133563	12005495	REFUSE DISPOSAL 5/1-15 SANIT	05/31/13	231228	24,630.32-

Vendor	Invoice Number	Purchase Order	Claims Number	Item Description	Check Date	Check No.	Check Amount
WASTE MANAGEMENT OF SOUT							
Sum							24,630.32-
00001 WATERS INTERNATIONAL TRU	8-231330056	00133284	12005402	REPR PTS SANIT STOCK	05/31/13	231229	113.92-
00001 WATERS INTERNATIONAL TRU	8-231340063	00133349	12005403	REPR PTS U#17726 SANIT	05/31/13	231229	239.30-
00001 WATERS INTERNATIONAL TRU	8-231340062	00133350	12005405	RADIATOR U#12891 CEMETERY	05/31/13	231229	595.00-
WATERS INTERNATIONAL TRU							
Sum							948.22-
00001 WATTS BROTHERS TRACTOR C	146903	00132811	12005437	REPR PTS STREET STOCK	05/31/13	231230	413.32-
00001 WATTS BROTHERS TRACTOR C	147428	00133340	12005438	REPR PTS U#16076 STREET	05/31/13	231230	75.12-
WATTS BROTHERS TRACTOR C							
Sum							488.44-
00001 WEBB, TOURQOUS	DAMAGE DEP R	02013495	12005570	DAMAGE DEPOSIT REFUND	05/31/13	231231	100.00-
WEBB, TOURQOUS							
Sum							100.00-
00001 WILLMUT GAS & OIL COMPAN	5/13 GENERAL	00201316	12005538	MNTHLY GAS-GENERAL	05/31/13	231234	262.63-
WILLMUT GAS & OIL COMPAN							
Sum							262.63-
Sum							1,261,486.32-

Vendor	Invoice Number	Purchase Order	Claims Number	Item Description	Check Date	Check No.	Check Amount
PARKS & RECREATION FUND							
00002 A & R FARM AND GARDEN	264172	00133545	12001497	FIRE ANT KILLER/WEED KILLER	05/31/13	230992	428.00-
A & R FARM AND GARDEN Sum							428.00-
00002 AGEE, LESLIE	OFFICIAL 5/1	02013493	12001431	OFFICIAL-ADULT FLAG FTBALL	05/31/13	230997	60.00-
AGEE, LESLIE Sum							60.00-
00002 AGRI-AFC LLC	1036216	00133479	12001398	MOLE CRICKET BAIT CAMERON FLD	05/31/13	230998	154.00-
AGRI-AFC LLC Sum							154.00-
00002 ALL SOUTH PORTABLE SANIT	10624	00131317	12001416	PORTALETS 3-5/13 TATUM SOCCER	05/31/13	231000	900.00-
ALL SOUTH PORTABLE SANIT Sum							900.00-
00002 ALLEN, MATT	OFFICIAL 5/1	02013494	12001441	OFFICIAL-ADULT SOFTBALL	05/31/13	231002	119.00-
ALLEN, MATT Sum							119.00-
00002 B S N SPORTS	95347566	00133245	12001402	FENCE GUARD CAMERON FIELD	05/31/13	231006	295.99-
B S N SPORTS Sum							295.99-
00002 BETTS, SHERMAN	OFFICIAL 5/1	02013494	12001442	OFFICIAL-ADULT SOFTBALL	05/31/13	231008	510.00-
BETTS, SHERMAN Sum							510.00-
00002 BOND, MARK	OFFICIAL 5/1	02013494	12001443	OFFICIAL-ADULT SOFTBALL	05/31/13	231012	208.00-
BOND, MARK Sum							208.00-
00002 BRACKMAN MOWER WAREHOUSE	IN0119395	00133378	12001385	HEDGE TRIMMER REPR	05/31/13	231014	56.89-
00002 BRACKMAN MOWER WAREHOUSE	IN0119398	00133379	12001386	MOWER REPR GRNDS MAINT	05/31/13	231014	134.40-
00002 BRACKMAN MOWER WAREHOUSE	IN0119392	00133380	12001387	MOWER REPR GRNDS MAINT	05/31/13	231014	457.00-
00002 BRACKMAN MOWER WAREHOUSE	IN0119390	00133381	12001388	MOWER REPR GRNDS MAINT	05/31/13	231014	75.25-
00002 BRACKMAN MOWER WAREHOUSE	IN0119397	00133382	12001389	MOWER REPR GRNDS MAINT	05/31/13	231014	254.16-
00002 BRACKMAN MOWER WAREHOUSE	0119401	00133384	12001390	WEEDEATER RPLCMNT PARTS	05/31/13	231014	238.80-
00002 BRACKMAN MOWER WAREHOUSE	IN0119396	00133377	12001393	PRESSURE WASH MOWER U#16975	05/31/13	231014	40.00-
00002 BRACKMAN MOWER WAREHOUSE	IN0119454	00133438	12001396	REPRS U#15517 GRNDS MAINT	05/31/13	231014	136.24-
00002 BRACKMAN MOWER WAREHOUSE	0119457	00133440	12001423	REPRS U#17714 GRNDS MAINT	05/31/13	231014	98.87-
BRACKMAN MOWER WAREHOUSE Sum							1,491.61-
00002 BRADDOCK, ARETHA	OFFICIAL 5/1	02013494	12001444	OFFICIAL-ADULT SOFTBALL	05/31/13	231015	68.00-
BRADDOCK, ARETHA							

Vendor	Invoice Number	Purchase Order	Claims Number	Item Description	Check Date	Check No.	Check Amount
Sum							68.00-
00002 BROWN, KIM	OFFICIAL 5/1	02013494	12001445	OFFICIAL-ADULT SOFTBALL	05/31/13	231018	102.00-
BROWN, KIM Sum							102.00-
00002 BUCKHAULTS ELECTRIC SERV	PO#131979 5/	00131979	12001408	BALLFLD LIGHT REPR VARI PKS	05/31/13	231020	3,500.00-
00002 BUCKHAULTS ELECTRIC SERV	PO#133414 5/	00133414	12001409	INSTALL SCOREBOARD TATUM FL#2	05/31/13	231020	500.00-
00002 BUCKHAULTS ELECTRIC SERV	PO#131643 5/	00131643	12001418	SCOREBOARDS TIMBERTON/DAHMER	05/31/13	231020	14,400.00-
BUCKHAULTS ELECTRIC SERV Sum							18,400.00-
00002 BUNCH, LATOYA L	OFFICIAL 5/1	02013494	12001446	OFFICIAL-YOUTH/ADLT SPORTS	05/31/13	231021	238.00-
BUNCH, LATOYA L Sum							238.00-
00002 BURKE, HOWARD	OFFICIAL 5/1	02013494	12001447	OFFICIAL-YOUTH SPORTS	05/31/13	231022	252.00-
BURKE, HOWARD Sum							252.00-
00002 CARTER, MICHAEL	OFFICIAL 5/1	02013493	12001432	OFFICIAL-ADULT FLAG FTBALL	05/31/13	231026	48.00-
CARTER, MICHAEL Sum							48.00-
00002 CHAIN ELECTRIC COMPANY	24748	00132810	12001428	TRANSFORMER PAD TATUM SOCCER	05/31/13	231029	3,143.75-
CHAIN ELECTRIC COMPANY Sum							3,143.75-
00002 CITY OF HATTIESBURG FUND	TRF 3RD 5/13	02013498	12001440	TRF 3RD 5/13 PAYROLL	05/29/13	36465	40,912.16-
CITY OF HATTIESBURG FUND Sum							40,912.16-
00002 CLARK, SHAWN	OFFICIAL 5/1	02013493	12001433	OFFICIAL-ADULT FLAG FTBALL	05/31/13	231032	60.00-
CLARK, SHAWN Sum							60.00-
00002 COLQUITT, ARIEL	SPORTS SERVS	02013492	12001469	SPORTS SUPPORT SERVICES	05/31/13	231035	14.00-
COLQUITT, ARIEL Sum							14.00-
00002 COLQUITT, EMMA	SPORTS SERVS	02013492	12001470	SPORTS SUPPORT SERVICES	05/31/13	231036	56.00-
COLQUITT, EMMA Sum							56.00-
00002 COOK, JANIS	OFFICIAL 5/1	02013493	12001434	OFFICIAL-ADULT FLAG FTBALL	05/31/13	231041	360.00-
COOK, JANIS							

Vendor	Invoice Number	Purchase Order	Claims Number	Item Description	Check Date	Check No.	Check Amount
Sum							360.00-
00002 COOLEY, MATTHEW	OFFICIAL 5/1	02013493	12001435	OFFICIAL-ADULT FLAG FTBALL	05/31/13	231042	60.00-
COOLEY, MATTHEW Sum							60.00-
00002 COOLEY, NAKITA	SPORTS SERVS	02013492	12001468	SPORTS SUPPORT SERVICES	05/31/13	231043	98.00-
COOLEY, NAKITA Sum							98.00-
00002 CURTIS, GEORGE	SPORTS SERVS	02013492	12001471	SPORTS SUPPORT SERVICES	05/31/13	231045	77.00-
CURTIS, GEORGE Sum							77.00-
00002 CURTIS, MALCOLM	OFFICIAL 5/1	02013494	12001448	OFFICIAL-ADULT SOFTBALL	05/31/13	231046	238.00-
CURTIS, MALCOLM Sum							238.00-
00002 DAKTECH COMPUTERS	INV0304349	00133000	12001419	LAPTOP REC ADM DEPT	05/31/13	231048	879.00-
DAKTECH COMPUTERS Sum							879.00-
00002 DAVIS, WARDELL	SPORTS SERVS	02013492	12001472	SPORTS SUPPORT SERVICES	05/31/13	231049	289.00-
DAVIS, WARDELL Sum							289.00-
00002 DIXON, TIMOTHY	OFFICIAL 5/1	02013494	12001449	OFFICIAL-ADULT SOFTBALL	05/31/13	231054	289.00-
DIXON, TIMOTHY Sum							289.00-
00002 DUNMORE, JOHNATHAN	SPORTS SERVS	02013492	12001473	SPORTS SUPPORT SERVICES	05/31/13	231055	175.00-
DUNMORE, JOHNATHAN Sum							175.00-
00002 EASTERLING, ISAIAH (POLL	OFFICIAL 5/1	02013494	12001450	OFFICIAL-ADULT SOFTBALL	05/31/13	231056	289.00-
EASTERLING, ISAIAH (POLL Sum							289.00-
00002 ECONOMY SUPPLY CO	192237	00133522	12001422	BLDG MATLS TATUM TENNIS RESTR	05/31/13	231057	78.39-
ECONOMY SUPPLY CO Sum							78.39-
00002 ELKINS WHOLESALE INC	174519-00	00133383	12001383	JANIT SUPP GRNDS MAINT	05/31/13	231059	255.82-
00002 ELKINS WHOLESALE INC	175263-00	00133546	12001496	JANIT SUPP GRNDS MAINT	05/31/13	231059	276.98-
ELKINS WHOLESALE INC Sum							532.80-

Vendor	Invoice Number	Purchase Order	Claims Number	Item Description	Check Date	Check No.	Check Amount
00002 ESTERS, WILLARD (BUTCH)	OFFICIAL 5/1	02013494	12001451	OFFICIAL-ADULT SOFTBALL	05/31/13	231061	34.00-
ESTERS, WILLARD (BUTCH) Sum							34.00-
00002 FAIRLEY, LAKENDRA	SPORTS SERVS	02013492	12001474	SPORTS SUPPORT SERVICES	05/31/13	231062	28.00-
FAIRLEY, LAKENDRA Sum							28.00-
00002 FAIRLEY, WILLIAM (VASTON	SPORTS SERVS	02013492	12001475	SPORTS SUPPORT SERVICES	05/31/13	231063	400.00-
FAIRLEY, WILLIAM (VASTON Sum							400.00-
00002 FERGUSON ENTERPRISES INC	1185021	00133254	12001404	WATER COOLER KAMPER PK TENNIS	05/31/13	231066	535.84-
FERGUSON ENTERPRISES INC Sum							535.84-
00002 GARDNER, QUINCEY	OFFICIAL 5/1	02013494	12001452	OFFICIAL-ADULT SOFTBALL	05/31/13	231073	51.00-
GARDNER, QUINCEY Sum							51.00-
00002 GREEN FOREST NURSERY INC	20593	00133505	12001399	RPLCMNT TREES VETERANS BLVD	05/31/13	231079	86.00-
GREEN FOREST NURSERY INC Sum							86.00-
00002 GRIFFIN, GABRIEL	OFFICIAL 5/1	02013494	12001453	OFFICIAL-ADULT BASKETBALL	05/31/13	231080	527.00-
GRIFFIN, GABRIEL Sum							527.00-
00002 GROVER BROS RESTAURANT &	196064	00132822	12001394	KITCHEN EQUIP CE ROY TORNADO	05/31/13	231082	645.00-
GROVER BROS RESTAURANT & Sum							645.00-
00002 HARRIS, DRE	SPORTS SERVS	02013492	12001476	SPORTS SUPPORT SERVICES	05/31/13	231086	70.00-
HARRIS, DRE Sum							70.00-
00002 HOLLIMON CONSTRUCTION	PO#132824 5/	00132824	12001410	SKIRTING REPR-S ANTONIO-STORM	05/31/13	231092	1,820.00-
HOLLIMON CONSTRUCTION Sum							1,820.00-
00002 HORNE, BRENDA	SPORTS SERVS	02013492	12001477	SPORTS SUPPORT SERVICES	05/31/13	231093	91.00-
HORNE, BRENDA Sum							91.00-
00002 HOSKINS, JAZAMINE	SPORTS SERVS	02013492	12001478	SPORTS SUPPORT SERVICES	05/31/13	231094	140.00-

Vendor	Invoice Number	Purchase Order	Claims Number	Item Description	Check Date	Check No.	Check Amount
HOSKINS, JAZAMINE							
Sum							140.00-
00002 J M H GRAPHICS	S 24488	00133506	12001429	UNIFORM TANK TOPS LIFEGUARDS	05/31/13	231101	441.00-
J M H GRAPHICS							
Sum							441.00-
00002 JACKSON, FREDDIE	SPORTS SERVS	02013492	12001479	SPORTS SUPPORT SERVICES	05/31/13	231102	35.00-
JACKSON, FREDDIE							
Sum							35.00-
00002 JACKSON, ROOSEVELT III	123130	00133518	12001498	PAINT TATUM SB/KAMPER TENNIS	05/31/13	231104	3,735.00-
JACKSON, ROOSEVELT III							
Sum							3,735.00-
00002 JEFCOAT FENCE OF HATTIES	0017638	00132539	12001417	FENCE REPR CE ROY TORNADO	05/31/13	231106	3,850.00-
JEFCOAT FENCE OF HATTIES							
Sum							3,850.00-
00002 JET CONSTRUCTION	1614	00133186	12001420	MASON SAND TATUM PARK	05/31/13	231107	1,650.00-
JET CONSTRUCTION							
Sum							1,650.00-
00002 JONES, ANN	PETTY CASH 5	00133595	12001414	PETTY CASH GRNDS MAINT	05/31/13	231109	142.06-
JONES, ANN							
Sum							142.06-
00002 JORDAN, BRITTNI	SPORTS SERVS	02013492	12001480	SPORTS SUPPORT SERVICES	05/31/13	231111	210.00-
JORDAN, BRITTNI							
Sum							210.00-
00002 JORDAN, SARDE	SPORTS SERVS	02013492	12001481	SPORTS SUPPORT SERVICES	05/31/13	231112	91.00-
JORDAN, SARDE							
Sum							91.00-
00002 K & K TRUCK-TRAILER PART	56820	00133504	12001406	TRAILER REPR PTS	05/31/13	231113	148.13-
K & K TRUCK-TRAILER PART							
Sum							148.13-
00002 KETTLEY, ANNETTE	SPORTS SERVS	02013492	12001482	SPORTS SUPPORT SERVICES	05/31/13	231116	140.00-
KETTLEY, ANNETTE							
Sum							140.00-
00002 KEYS, MECHEKA	SPORTS SERVS	02013492	12001483	SPORTS SUPPORT SERVICES	05/31/13	231117	140.00-
KEYS, MECHEKA							
Sum							140.00-

Vendor	Invoice Number	Purchase Order	Claims Number	Item Description	Check Date	Check No.	Check Amount
00002 KIRKSEY, JOHNATHAN	OFFICIAL 5/1	02013494	12001454	OFFICIAL-ADULT BASKETBALL	05/31/13	231118	68.00-
KIRKSEY, JOHNATHAN Sum							68.00-
00002 KIRKSEY, NANCY JONES	SPORTS SERVS	02013492	12001484	SPORTS SUPPORT SERVICES	05/31/13	231119	410.00-
KIRKSEY, NANCY JONES Sum							410.00-
00002 LANCASTER'S MACHINE & WE	21266	00133517	12001407	TRAILER REPR GRNDS MAINT	05/31/13	231122	240.00-
LANCASTER'S MACHINE & WE Sum							240.00-
00002 LANGHAM, PAUL	OFFICIAL 5/1	02013493	12001437	OFFICIAL-ADULT FLAG FTBALL	05/31/13	231123	60.00-
LANGHAM, PAUL Sum							60.00-
00002 LARK POOL (S&T ASSOC)	1155895	00132542	12001499	DEBRIS RMVL CE ROY POOL-STORM	05/31/13	231124	2,190.00-
00002 LARK POOL (S&T ASSOC)	1155897	00133278	12001501	PUMP MOTOR DAHMER POOL REPR	05/31/13	231124	260.00-
LARK POOL (S&T ASSOC) Sum							2,450.00-
00002 LEE, BRIAN M	OFFICIAL 5/1	02013494	12001455	OFFICIAL-ADULT SOFTBALL	05/31/13	231126	85.00-
LEE, BRIAN M Sum							85.00-
00002 LOCKE, JACKIE W	OFFICIAL 5/1	02013494	12001456	OFFICIAL-ADULT SOFTBALL	05/31/13	231128	170.00-
LOCKE, JACKIE W Sum							170.00-
00002 MCELHANEY PLUMBING INC	206463	00133538	12001415	PLUMB SUPP TATUM SOC RESTRM	05/31/13	231134	36.85-
MCELHANEY PLUMBING INC Sum							36.85-
00002 MCNAIR, EVELENE	OFFICIAL 5/1	02013494	12001457	OFFICIAL-ADULT SOFTBALL	05/31/13	231137	502.00-
MCNAIR, EVELENE Sum							502.00-
00002 MCPHAIL, HOWARD F	SPORTS SERVS	02013492	12001485	SPORTS SUPPORT SERVICES	05/31/13	231138	290.00-
MCPHAIL, HOWARD F Sum							290.00-
00002 MIKE'S TIRE & WHEEL CO	2167329	00132817	12001384	TIRES U#8647 GRNDS MAINT	05/31/13	231142	402.08-
00002 MIKE'S TIRE & WHEEL CO	2167259	00133320	12001391	TRAILER TIRE U#11961	05/31/13	231142	100.22-
00002 MIKE'S TIRE & WHEEL CO	2167317	00133419	12001392	MOWER TIRES GRNDS MAINT UNITS	05/31/13	231142	161.02-
00002 MIKE'S TIRE & WHEEL CO	2167315	00132818	12001424	TIRES U#13130 GRNDS MAINT	05/31/13	231142	719.80-
00002 MIKE'S TIRE & WHEEL CO	2167449	00133543	12001425	TRAILER TIRES GRNDS MAINT	05/31/13	231142	400.88-

Vendor	Invoice Number	Purchase Order	Claims Number	Item Description	Check Date	Check No.	Check Amount
MIKE'S TIRE & WHEEL CO Sum							1,784.00-
00002 MILLER, CLIFF	OFFICIAL 5/1	02013494	12001458	OFFICIAL-ADULT SOFTBALL	05/31/13	231143	68.00-
MILLER, CLIFF Sum							68.00-
00002 MILLER, LLOYD M	OFFICIAL 5/1	02013494	12001459	OFFICIAL-ADULT BASKETBALL	05/31/13	231144	68.00-
MILLER, LLOYD M Sum							68.00-
00002 MINGO, DEMYRON MANDELA	OFFICIAL 5/1	02013494	12001460	OFFICIAL-ADULT BASKETBALL	05/31/13	231145	306.00-
MINGO, DEMYRON MANDELA Sum							306.00-
00002 MOORE'S LOCK AND KEY LLC	13871	00133474	12001403	DUPLICATE KEY U#18680	05/31/13	231148	55.00-
MOORE'S LOCK AND KEY LLC Sum							55.00-
00002 MS POWER COMPANY	5/13 PKS/REC	00201316	12001430	MNTHLY ELEC-PARKS & REC	05/31/13	231150	13,213.59-
MS POWER COMPANY Sum							13,213.59-
00002 NEEL-SCHAFFER INC	1009954	00131089	12001427	DISABILITY FLD SURVEY TATUM	05/31/13	231154	500.00-
NEEL-SCHAFFER INC Sum							500.00-
00002 PATTERSON, ISIAH	OFFICIAL 5/1	02013494	12001461	OFFICIAL-ADULT SOFTBALL	05/31/13	231159	475.00-
00002 PATTERSON, ISIAH	OFFICIAL 5/1	02013494	12001495	OFFICIAL-ADULT BASKETBALL	05/31/13	231159	1.00-
PATTERSON, ISIAH Sum							476.00-
00002 PLAY IT AGAIN SPORTS	PO#132538 4/	00132538	12001411	T SHIRTS/HATS YOUTH BASEBALL	05/31/13	231165	4,079.00-
00002 PLAY IT AGAIN SPORTS	PO#132691 4/	00132691	12001412	T BALL/COACH PITCH UNIFORMS	05/31/13	231165	512.50-
00002 PLAY IT AGAIN SPORTS	PO#133483 5/	00133483	12001413	T SHIRTS FALL SOFTBALL LEAGUE	05/31/13	231165	1,260.00-
PLAY IT AGAIN SPORTS Sum							5,851.50-
00002 POLK, REGGIE Y	OFFICIAL 5/1	02013493	12001436	OFFICIAL-ADULT FLAG FTBALL	05/31/13	231167	60.00-
POLK, REGGIE Y Sum							60.00-
00002 POWELL, RANDY	SPORTS SERVS	02013492	12001486	SPORTS SUPPORT SERVICES	05/31/13	231168	147.00-
POWELL, RANDY Sum							147.00-
00002 PUCKETT RENTS	391201-0001	00133173	12001395	FORM MATL CHAIN PARK	05/31/13	231172	55.98-

Vendor	Invoice Number	Purchase Order	Claims Number	Item Description	Check Date	Check No.	Check Amount
PUCKETT RENTS							
Sum							55.98-
00002 RANKIN, DEANGELO	SPORTS SERVS	02013492	12001487	SPORTS SUPPORT SERVICES	05/31/13	231174	56.00-
RANKIN, DEANGELO							
Sum							56.00-
00002 SHARP, SCOTT	OFFICAL 5/10	02013493	12001438	OFFICIAL-ADULT FLAG FTBALL	05/31/13	231187	60.00-
SHARP, SCOTT							
Sum							60.00-
00002 SHERWIN-WILLIAMS COMPANY	4067-2	00133449	12001426	PAINT SUPP SIGN SUPPORTS	05/31/13	231188	35.67-
SHERWIN-WILLIAMS COMPANY							
Sum							35.67-
00002 SIGNS FIRST	H-40867	00132587	12001421	KHB EARTH DAY SIGNS	05/31/13	231191	273.18-
SIGNS FIRST							
Sum							273.18-
00002 SIMPSON, LYNN	OFFICIAL 5/1	02013494	12001462	OFFICIAL-ADULT SOFTBALL	05/31/13	231192	68.00-
SIMPSON, LYNN							
Sum							68.00-
00002 SIMPSON, NELDA	SPORTS SERVS	02013492	12001488	SPORTS SUPPORT SERVICES	05/31/13	231193	28.00-
SIMPSON, NELDA							
Sum							28.00-
00002 SOLAR SUPPLY INC	3442284	00133327	12001405	WTR COOLER PTS KAMPER TENNIS	05/31/13	231194	85.24-
SOLAR SUPPLY INC							
Sum							85.24-
00002 SOUTHERN FOREST PRODUCTS	2263	00133191	12001400	WOOD SHAVINGS GRNDS MAINT	05/31/13	231197	800.00-
SOUTHERN FOREST PRODUCTS							
Sum							800.00-
00002 TAYLOR, CALVIN	OFFICIAL 5/1	02013493	12001439	OFFICIAL-ADULT FLAG FTBALL	05/31/13	231209	60.00-
TAYLOR, CALVIN							
Sum							60.00-
00002 THOMPSON, JESSE	OFFICAL 5/10	02013494	12001463	OFFICIAL-ADULT SOFTBALL	05/31/13	231211	204.00-
THOMPSON, JESSE							
Sum							204.00-
00002 TROTTER, COREY	OFFICIAL 5/1	02013494	12001464	OFFICIAL-ADULT SOFTBALL	05/31/13	231212	170.00-
TROTTER, COREY							

Vendor	Invoice Number	Purchase Order	Claims Number	Item Description	Check Date	Check No.	Check Amount
Sum							170.00-
00002 TROTTER, WILLIE	OFFICIAL 5/1	02013494	12001465	OFFICIAL-ADULT SOFTBALL	05/31/13	231213	255.00-
TROTTER, WILLIE Sum							255.00-
00002 TRUSSELL, JAY	OFFICIAL 5/1	02013494	12001466	OFFICIAL-ADULT SOFTBALL	05/31/13	231216	34.00-
TRUSSELL, JAY Sum							34.00-
00002 VARNADO, ALEXZANDRIA	SPORTS SERVS	02013492	12001489	SPORTS SUPPORT SERVICES	05/31/13	231219	98.00-
VARNADO, ALEXZANDRIA Sum							98.00-
00002 VARNADO, UNDRA	SPORTS SERVS	02013492	12001490	SPORTS SUPPORT SERVICES	05/31/13	231220	203.00-
VARNADO, UNDRA Sum							203.00-
00002 VESELY'S NURSERY	PO#133247 5/	00133247	12001401	LANDSCAPE PLANTS VARI CNTRS	05/31/13	231222	1,350.00-
VESELY'S NURSERY Sum							1,350.00-
00002 VINCENT, CALVIN JR	SPORTS SERVS	02013492	12001491	SPORTS SUPPORT SERVICES	05/31/13	231223	270.00-
VINCENT, CALVIN JR Sum							270.00-
00002 WAL-MART STORES INC	002745	00133101	12001397	WATER COOLERS GRNDS MNT CREWS	05/31/13	231224	114.40-
WAL-MART STORES INC Sum							114.40-
00002 WALLEY, DEVIN	OFFICIAL 5/1	02013494	12001467	OFFICIAL-ADULT SOFTBALL	05/31/13	231225	119.00-
WALLEY, DEVIN Sum							119.00-
00002 WARE, DERRICK	SPORTS SERVS	02013492	12001492	SPORTS SUPPORT SERVICES	05/31/13	231226	175.00-
WARE, DERRICK Sum							175.00-
00002 WHEELER, CURTIS	SPORTS SERVS	02013492	12001493	SPORTS SUPPORT SERVICES	05/31/13	231233	196.00-
WHEELER, CURTIS Sum							196.00-
00002 WINDHAM, CRYSTAL	SPORTS SERVS	02013492	12001494	SPORTS SUPPORT SERVICES	05/31/13	231235	28.00-
WINDHAM, CRYSTAL Sum							28.00-

Vendor	Invoice Number	Purchase Order	Claims Number	Item Description	Check Date	Check No.	Check Amount
Sum							117,415.14-

CITY OF HATTIESBURG
DOCKET OF CLAIMS
PERIOD ENDING MAY 31, 2013

Vendor	Invoice Number	Purchase Order	Claims Number	Item Description	Check Date	Check No.	Check Amount
HATT.MUNICIPAL FIRE PROTECTION							
00005 C D W GOVERNMENT	BL89367	00132241	12000040	DATE PROCESS EQUIP FIRE DEPT	05/31/13	231024	260.00-
00005 C D W GOVERNMENT	BM43624	00132241	12000041	DATA PROCESS EQUIP FIRE DEPT	05/31/13	231024	105.00-
00005 C D W GOVERNMENT	BN02915	00132241	12000042	DATA PROCESS EQUIP FIRE DEPT	05/31/13	231024	90.00-
00005 C D W GOVERNMENT	BR47702	00132241	12000043	DATA PROCESS EQUIP FIRE DEPT	05/31/13	231024	2,650.00-
00005 C D W GOVERNMENT	CC58761	00132241	12000044	DATA PROCESS EQUIP FIRE DEPT	05/31/13	231024	75.00-
C D W GOVERNMENT Sum							3,180.00-
Sum							3,180.00-

Vendor	Invoice Number	Purchase Order	Claims Number	Item Description	Check Date	Check No.	Check Amount
PAYROLL FUND							
00006 A DOLLAR CASH ADVANCE (G	1885	02013155	12000567	GARNISHMENT	05/20/13	17746	82.41-
A DOLLAR CASH ADVANCE (G Sum							82.41-
00006 AUTOMATED COLLECTION SER	5257	02013155	12000570	GARNISHMENT	05/20/13	17749	151.26-
AUTOMATED COLLECTION SER Sum							151.26-
00006 CHECK EXCHANGE (GARN)	6758	02013155	12000568	GARNISHMENT	05/20/13	17747	474.00-
CHECK EXCHANGE (GARN) Sum							474.00-
00006 CHILD SUPPORT ENFORCEMEN	3871	02013156	12000548	CHILD SUPPORT	05/20/13	17727	200.00-
CHILD SUPPORT ENFORCEMEN Sum							200.00-
00006 CONVILLE & CONVILLE PLLC	5838	02013155	12000560	HARNISHMENT	05/20/13	17739	150.76-
CONVILLE & CONVILLE PLLC Sum							150.76-
00006 COUCH CONVILLE AND BLITT	3768	02013155	12000563	GARNISHMENT	05/20/13	17742	19.10-
COUCH CONVILLE AND BLITT Sum							19.10-
00006 FIRST HERITAGE CREDIT (G	9891	02013155	12000571	GARNISHMENT	05/20/13	17750	41.62-
FIRST HERITAGE CREDIT (G Sum							41.62-
00006 FORREST CTY CIRCUIT COUR	8772	02013155	12000586	GARNISHMENT	05/21/13	17765	407.39-
FORREST CTY CIRCUIT COUR Sum							407.39-
00006 GREAT LAKES HIGHER EDUCA	1583	02013155	12000564	GARNISHMENT	05/20/13	17743	181.90-
GREAT LAKES HIGHER EDUCA Sum							181.90-
00006 HENLEY, LOTTERHOS & HENL	9998,5994,76	02013155	12000561	GARNISHMENT	05/20/13	17740	435.22-
HENLEY, LOTTERHOS & HENL Sum							435.22-
00006 HINDS CTY JUSTICE COURT	8758	02013155	12000583	GARNISHMENT	05/21/13	17762	545.76-
HINDS CTY JUSTICE COURT Sum							545.76-
00006 JOHN R REEVES PC (CHILD	6467	02013156	12000550	CHILD SUPPORT	05/20/13	17729	150.00-

Vendor	Invoice Number	Purchase Order	Claims Number	Item Description	Check Date	Check No.	Check Amount
JOHN R REEVES PC (CHILD Sum							150.00-
00006 MCELROY PA, THOMAS M (GA	4289	02013155	12000562	GARNISHMENT	05/20/13	17741	676.42-
MCELROY PA, THOMAS M (GA Sum							676.42-
00006 MONEY NOW (GARN)	6736	02013155	12000577	GARNISHMENT	05/20/13	17756	150.00-
MONEY NOW (GARN) Sum							150.00-
00006 MYERS, LATOSHA	REFUND TRVL	02013483	12000559	REFUND TRAVEL WITHHELD	05/20/13	17738	49.62-
MYERS, LATOSHA Sum							49.62-
00006 NC CHILD SUPPORT CENTRAL	7589	02013156	12000547	CHILD SUPPORT	05/20/13	17726	220.00-
NC CHILD SUPPORT CENTRAL Sum							220.00-
00006 PARNELL & CRUMB PA (GARN	8778	02013155	12000588	GARNISHMENT	05/22/13	17769	277.11-
PARNELL & CRUMB PA (GARN Sum							277.11-
00006 REPUBLIC FINANCE INC (G	3629	02013155	12000587	GARNISHMENT	05/21/13	17766	24.20-
REPUBLIC FINANCE INC (G Sum							24.20-
00006 SHOEMAKER PROPERTY (GARN	9747	02013155	12000584	GARNISHMENT	05/21/13	17763	444.36-
SHOEMAKER PROPERTY (GARN Sum							444.36-
00006 STATE DISBURSEMENT UNIT	8652	02013156	12000549	CHILD SUPPORT	05/20/13	17728	372.68-
STATE DISBURSEMENT UNIT Sum							372.68-
00006 STEVEN D SLADE (GARN)	0474	02013155	12000573	GARNISHMENT	05/20/13	17752	435.92-
STEVEN D SLADE (GARN) Sum							435.92-
00006 STOKES & CLINTON PC (GAR	4795,4935	02013155	12000585	GARNISHMENT	05/21/13	17764	805.28-
STOKES & CLINTON PC (GAR Sum							805.28-
00006 TEXAS CHILD SUPPORT SOU	6226	02013156	12000551	CHILD SUPPORT	05/20/13	17730	250.00-
TEXAS CHILD SUPPORT SOU							

Vendor	Invoice Number	Purchase Order	Claims Number	Item Description	Check Date	Check No.	Check Amount
Sum							250.00-
00006 U S DEPT OF TREASURY (GA	9574	02013155	12000566	GARNISHMENT	05/20/13	17745	164.42-
U S DEPT OF TREASURY (GA Sum							164.42-
00006 UNITED CREDIT CORP (GARN	8663	02013155	12000575	GARNISHMENT	05/20/13	17754	643.16-
UNITED CREDIT CORP (GARN Sum							643.16-
00006 WINN BROWN LAW FIRM,THE	6135	02013155	12000576	GARNISHMENT	05/20/13	17755	303.90-
WINN BROWN LAW FIRM,THE Sum							303.90-
Sum							7,656.49-

Vendor	Invoice Number	Purchase Order	Claims Number	Item Description	Check Date	Check No.	Check Amount
WATER & SEWER OPERATION/MAINT.							
00009 ADVANCED JANITORIAL SERV	20310 WTR OF	00133683	12001202	SERVS 5/13 WATER OFFICE	05/31/13	230996	495.00-
ADVANCED JANITORIAL SERV Sum							495.00-
00009 AUTO ARMATURE SERVICE IN	0771	00133348	12001160	BATTERY/ALT U#14760 TRANS	05/31/13	231005	319.90-
00009 AUTO ARMATURE SERVICE IN	0692	00133453	12001180	LAWNMOWER STARTER WTR PLANT	05/31/13	231005	129.95-
00009 AUTO ARMATURE SERVICE IN	0407	00133043	12001195	BATTERY U#14164 TRANS	05/31/13	231005	119.95-
AUTO ARMATURE SERVICE IN Sum							569.80-
00009 BLOSSMAN GAS INC	313905	00133520	12001186	PROPANE PLANT FORKLIFT	05/31/13	231009	26.00-
BLOSSMAN GAS INC Sum							26.00-
00009 BONNER ANALYTICAL TESTIN	52473	00133454	12001167	SAMPLES N CHANCELLOR/DAVIDSON	05/31/13	231013	457.10-
00009 BONNER ANALYTICAL TESTIN	52234	00133659	12001196	COLIFORM SAMPLES VARI LOC	05/31/13	231013	100.00-
00009 BONNER ANALYTICAL TESTIN	52545	00133659	12001197	NPDES MONITORING 5/13	05/31/13	231013	885.82-
BONNER ANALYTICAL TESTIN Sum							1,442.92-
00009 CARQUEST AUTO PARTS STOR	14758-6003	00133023	12001188	REPR PTS U#9745 PLANT	05/31/13	231025	209.90-
CARQUEST AUTO PARTS STOR Sum							209.90-
00009 CENTRAL PIPE SUPPLY INC	R88465	00133409	12001169	PLUMB SUPP TRANS STOCK	05/31/13	231027	1,066.05-
00009 CENTRAL PIPE SUPPLY INC	R88466	00133408	12001170	CUTTER BLADES SEWER DEPT	05/31/13	231027	336.05-
00009 CENTRAL PIPE SUPPLY INC	R88313	00133626	12001183	PLUMB SUPP TRANS DEPT	05/31/13	231027	232.56-
00009 CENTRAL PIPE SUPPLY INC	R88752	00133626	12001184	PLUMB SUPP TRANS DEPT	05/31/13	231027	232.56-
CENTRAL PIPE SUPPLY INC Sum							1,867.22-
00009 CHAIN ELECTRIC COMPANY	24557	00133613	12001189	GENERATOR REPR-LIGHTNING-PLT	05/31/13	231029	113.42-
CHAIN ELECTRIC COMPANY Sum							113.42-
00009 CINTAS FIRST AID J71	OJ71105670	00133144	12001161	SAFETY EQUIP SEWER DEPT	05/31/13	231031	439.92-
CINTAS FIRST AID J71 Sum							439.92-
00009 CITY OF HATTIESBURG FUND	TRF 3RD 5/13	02013498	12001200	TRF 3RD 5/13 PAYROLL	05/29/13	21671	73,448.51-
CITY OF HATTIESBURG FUND Sum							73,448.51-
00009 COBURN'S SUPPLY CO INC	605841849	00133170	12001177	PLUMB SUPP TRANS STOCK	05/31/13	231034	507.32-
00009 COBURN'S SUPPLY CO INC	605863442	00133170	12001178	PLUMB SUPP TRANS STOCK	05/31/13	231034	28.00-
00009 COBURN'S SUPPLY CO INC	605863356	00133412	12001179	PLUMB SUPP TRANS STOCK	05/31/13	231034	212.76-
00009 COBURN'S SUPPLY CO INC	605865843	00133502	12001185	PLUMB SUPP TRANS STOCK	05/31/13	231034	336.98-

Vendor	Invoice Number	Purchase Order	Claims Number	Item Description	Check Date	Check No.	Check Amount
COBURN'S SUPPLY CO INC Sum							1,085.06-
00009 DIXIE COMMUNITY UTILITY	SEWER BILLIN	00133562	12001182	SEWER BILLING REPORT 4/13	05/31/13	231053	225.90-
DIXIE COMMUNITY UTILITY Sum							225.90-
00009 GILLILANDS ELECTRONICS S	54821	00133682	12001204	PHONE MAINT 6/13-6/14 WTR OFC	05/31/13	231077	393.00-
GILLILANDS ELECTRONICS S Sum							393.00-
00009 GRINER DRILLING SERVICE	R30200	00131931	12001168	GATE VALVES WTR PLANT	05/31/13	231081	4,942.85-
GRINER DRILLING SERVICE Sum							4,942.85-
00009 INDUSTRIAL ELECTRIC MOTO	RI1094	00133346	12001205	REWIND MOTOR WTR PLANT	05/31/13	231096	4,949.90-
INDUSTRIAL ELECTRIC MOTO Sum							4,949.90-
00009 IRBY, STUART C CO	S007542687.0	00133329	12001187	LIGHT BULBS PLT #2	05/31/13	231100	51.36-
IRBY, STUART C CO Sum							51.36-
00009 JET CONSTRUCTION	1612	00133488	12001191	CLAY GRAVEL SEWER DEPT	05/31/13	231107	2,300.00-
JET CONSTRUCTION Sum							2,300.00-
00009 MIKE'S TIRE & WHEEL CO	2167188	00133189	12001162	BACKHOE TIRE REPR U#15775 SWR	05/31/13	231142	171.47-
MIKE'S TIRE & WHEEL CO Sum							171.47-
00009 MS POWER COMPANY	5/13 W&SO&M	00201316	12001198	MNTHLY ELEC-W&SO&M	05/31/13	231150	75,198.81-
MS POWER COMPANY Sum							75,198.81-
00009 NICHOLSON & COMPANY PLLC	164431	02013472	12001165	FINAL BILLING '11-'12 AUDIT	05/31/13	231156	3,138.75-
NICHOLSON & COMPANY PLLC Sum							3,138.75-
00009 OFFICE DEPOT INC	1576882325	00133175	12001166	COPIER/PRINTER/SCANNER-PLT	05/31/13	231157	89.99-
OFFICE DEPOT INC Sum							89.99-
00009 PEARL RIVER VALLEY EPA (	5/13 W&SO&M	00201316	12001199	MNTHLY 5/13 PUBLIC SERVICES	05/31/13	231161	50.00-
PEARL RIVER VALLEY EPA (							

Vendor	Invoice Number	Purchase Order	Claims Number	Item Description	Check Date	Check No.	Check Amount
Sum							50.00-
00009 PUMP AND CONTROL SERVICE	456	00133501	12001192	MAINT/REPRS S LAGOON 5/13-16	05/31/13	231173	3,200.00-
PUMP AND CONTROL SERVICE Sum							3,200.00-
00009 RAWLS SPRINGS UTILITY DI	METER READIN	00133681	12001203	METER READINGS 4/13	05/31/13	231175	168.00-
RAWLS SPRINGS UTILITY DI Sum							168.00-
00009 S & N AIROFLO INC	15348	00133397	12001181	15 HP MOTORS LAGOON	05/31/13	231181	7,940.00-
S & N AIROFLO INC Sum							7,940.00-
00009 SOUTHERN PINE ELECTRIC P	5/13 W&SO&M	00201316	12001194	MNTHLY 5/13 PUBLIC SERVICES	05/31/13	231198	1,720.25-
SOUTHERN PINE ELECTRIC P Sum							1,720.25-
00009 U S POSTAL SERVICE POSTA	6/1/13-5/31/	00133568	12001176	W&S POST BOX THROUGH 5/31/14	05/23/13	21670	450.00-
U S POSTAL SERVICE POSTA Sum							450.00-
00009 WARREN PAVING INC	13003MB	00133087	12001190	CRUSHED CONCRETE SEWER DEPT	05/31/13	231227	2,694.72-
WARREN PAVING INC Sum							2,694.72-
00009 WILLMUT GAS & OIL COMPAN	5/13 W&SO&M	00201316	12001193	MNTHLY GAS-W&SO&M	05/31/13	231234	12.86-
WILLMUT GAS & OIL COMPAN Sum							12.86-
Sum							187,395.61-

Vendor	Invoice Number	Purchase Order	Claims Number	Item Description	Check Date	Check No.	Check Amount
WATER & SEWER FUND							
00011 BOHN, SANDRA	METER DEP RF 02013485		12000663	METER DEPOSIT REFUND	05/31/13	231011	3.82-
BOHN, SANDRA Sum							3.82-
00011 CHARLES, MARSHALL D JR	METER DEP RF 02013485		12000670	METER DEPOIST REFUND	05/31/13	231030	2.64-
CHARLES, MARSHALL D JR Sum							2.64-
00011 DENNIS JR., CHARLES E	METER DEP RF 02013485		12000666	METER DEPOSIT REFUND	05/31/13	231051	2.64-
DENNIS JR., CHARLES E Sum							2.64-
00011 HENDERSON, NICOLE	METER DEP RF 02013485		12000674	METER DEPOSIT REFUND	05/31/13	231089	55.82-
HENDERSON, NICOLE Sum							55.82-
00011 HIBBLER, NATHANIEL	METER DEP RF 02013485		12000673	METER DEPOSIT REFUND	05/31/13	231090	38.82-
HIBBLER, NATHANIEL Sum							38.82-
00011 JAMES, VALRIE A	METER DEP RF 02013485		12000672	METER DEPOSIT REFUND	05/31/13	231105	3.82-
JAMES, VALRIE A Sum							3.82-
00011 JONES, KAYLA M	METER DEP RF 02013485		12000675	METER DEPOSIT REFUND	05/31/13	231110	38.82-
JONES, KAYLA M Sum							38.82-
00011 KELLUM, AGRIPPA S	METER DEP RF 02013485		12000662	METER DEPOSIT REFUND	05/31/13	231114	3.82-
KELLUM, AGRIPPA S Sum							3.82-
00011 LINDSEY, PATRICIA A	METER DEP RF 02013485		12000664	METER DEPOSIT REFUND	05/31/13	231127	3.82-
LINDSEY, PATRICIA A Sum							3.82-
00011 MCCARTY, SHANDRA M	METER DEP RF 02013485		12000661	METER DEPOSIT REFUND	05/31/13	231133	4.10-
MCCARTY, SHANDRA M Sum							4.10-
00011 MCKENZIE, JERRY	METER DEP RF 02013485		12000671	METER DEPOSIT REFUND	05/31/13	231135	3.82-
MCKENZIE, JERRY Sum							3.82-
00011 SCOTT, REDENA	METER DEP RF 02013485		12000669	METER DEPOSIT REFUND	05/31/13	231186	38.82-

Vendor	Invoice Number	Purchase Order	Claims Number	Item Description	Check Date	Check No.	Check Amount
SCOTT, REDENA							
Sum							38.82-
00011 SHIRLEY, PARKER	METER DEP RF 02013485		12000668	METER DEPOSIT REFUND	05/31/13	231189	38.82-
SHIRLEY, PARKER							
Sum							38.82-
00011 SOLLIE, KACEY L	METER DEP RF 02013485		12000665	METER DEPOSIT REFUND	05/31/13	231195	38.82-
SOLLIE, KACEY L							
Sum							38.82-
00011 WELCH, GIGI	METER DEP RF 02013485		12000667	METER DEPOSIT REFUND	05/31/13	231232	11.76-
WELCH, GIGI							
Sum							11.76-
Sum							290.16-

Vendor	Invoice Number	Purchase Order	Claims Number	Item Description	Check Date	Check No.	Check Amount
POLICE FORFEITURES FUND							
00019 GEORGE'S SPORTING GOODS	6323JP	00133476	12000065	EQUIP PAL SUMMER CAMP 2013	05/31/13	231075	927.98-
GEORGE'S SPORTING GOODS Sum							927.98-
00019 WAL-MART STORES INC	007037	00132327	12000064	REFRSHMNTS DARE/GREAT GRAD	05/31/13	231224	253.44-
WAL-MART STORES INC Sum							253.44-
Sum							1,181.42-

Vendor	Invoice Number	Purchase Order	Claims Number	Item Description	Check Date	Check No.	Check Amount
TAX COLLECTOR'S FUND							
00027 CITY OF HATTIESBURG FUND MILLAGE DIST	02013474		12000080	MILLAGE DIST TO TIF	05/22/13	36469	360,898.60-
CITY OF HATTIESBURG FUND Sum							360,898.60-
Sum							360,898.60-

CITY OF HATTIESBURG
DOCKET OF CLAIMS
PERIOD ENDING MAY 31, 2013

Vendor	Invoice Number	Purchase Order	Claims Number	Item Description	Check Date	Check No.	Check Amount
MUNICIPAL ROAD & BRIDGE							
00072 CATERPILLAR FINANCIAL SE	CONT#0597687	02013484	12000263	BACKHOE LEASE PYMT DUE 5/29/13	05/23/13	41058	1,086.14-
CATERPILLAR FINANCIAL SE Sum							1,086.14-
00072 NEEL-SCHAFFER INC	1009953	00133651	12000269	SRV 3/13 HARDY ST CORRIDOR	05/31/13	231154	6,409.14-
00072 NEEL-SCHAFFER INC	1009957	00133652	12000270	SRV 3/13 4TH ST EXPAN PH II	05/31/13	231154	471.70-
00072 NEEL-SCHAFFER INC	1009961	00133654	12000271	SRV 3/13 LLT DEPOT RR PERMIT	05/31/13	231154	1,219.51-
00072 NEEL-SCHAFFER INC	1009989-11-2	00133656	12000272	SERV 3/13 SIDEWALK PROJECT	05/31/13	231154	2,601.07-
00072 NEEL-SCHAFFER INC	1009989-99 S	00133648	12000274	SERV 3/13 SAFE ROUTES SCHOOL	05/31/13	231154	942.75-
00072 NEEL-SCHAFFER INC	1009989-02	00133653	12000275	SRV 3/13 SCHOOL ROUTE WOODLEY	05/31/13	231154	2,923.60-
NEEL-SCHAFFER INC Sum							14,567.77-
00072 PUCKETT MACHINERY COMPAN	R3825103	00133443	12000273	EXCAVATOR TORNADO DEBRIS RMVL	05/31/13	231171	6,751.75-
00072 PUCKETT MACHINERY COMPAN	R37612032	00128061	12000276	CREDIT	05/31/13	231171	289.40
00072 PUCKETT MACHINERY COMPAN	WOHB5252510	00133387	12000277	DAMAGE REPR CAT RENTAL	05/31/13	231171	5,935.07-
00072 PUCKETT MACHINERY COMPAN	R37612031	00128061	12000278	CREDIT	05/31/13	231171	800.24
PUCKETT MACHINERY COMPAN Sum							11,597.18-
00072 WARREN PAVING INC	12622MB	00131966	12000264	ASPHALT VARI LOC	05/31/13	231227	1,488.00-
00072 WARREN PAVING INC	12714MB	00131966	12000265	ASPHALT VARI LOC	05/31/13	231227	2,308.20-
00072 WARREN PAVING INC	12757MB	00131966	12000266	ASPHALT VARI LOC	05/31/13	231227	4,068.60-
00072 WARREN PAVING INC	12821MB	00131966	12000267	ASPHALT VARI LOC	05/31/13	231227	1,882.20-
00072 WARREN PAVING INC	12883MB	00131966	12000268	ASPHALT VARI LOC	05/31/13	231227	2,202.60-
WARREN PAVING INC Sum							11,949.60-
Sum							39,200.69-

CITY OF HATTIESBURG
DOCKET OF CLAIMS
PERIOD ENDING MAY 31, 2013

Vendor	Invoice Number	Purchase Order	Claims Number	Item Description	Check Date	Check No.	Check Amount
MASS TRANSIT FUND							
00073 ADVANCED CARPET CARE & R	10124	00133057	12000382	CLEAN CARPET IN OFFICE	05/31/13	230995	225.00-
ADVANCED CARPET CARE & R Sum							225.00-
00073 ADVANCED JANITORIAL SERV	20310 MASS T	00133683	12000389	SERVS 5/13 MASS TRANSIT	05/31/13	230996	345.00-
ADVANCED JANITORIAL SERV Sum							345.00-
00073 CITY OF HATTIESBURG FUND	TRF 3RD 5/13	02013498	12000388	TRF 3RD 5/13 PAYROLL	05/29/13	17770	17,632.58-
CITY OF HATTIESBURG FUND Sum							17,632.58-
00073 COMSOUTH	169782	00132467	12000383	RADIOS FOR BUSES	05/31/13	231038	34,450.00-
COMSOUTH Sum							34,450.00-
00073 CONSOLIDATED PLASTICS CO	7360705	00133281	12000378	RUGS FOR FRONT OFFICE	05/31/13	231039	194.52-
CONSOLIDATED PLASTICS CO Sum							194.52-
00073 MS POWER COMPANY	5/13 MASS TR	00201316	12000387	MNTHLY ELEC-MASS TRANSIT	05/31/13	231150	968.93-
MS POWER COMPANY Sum							968.93-
00073 NAPA AUTO PARTS	489386	00133077	12000379	JUMP STARTER FOR BUSES	05/31/13	231153	369.99-
NAPA AUTO PARTS Sum							369.99-
00073 OFFICE DEPOT INC	658055028001	00133242	12000386	DIGITAL CAMERA	05/31/13	231157	299.99-
OFFICE DEPOT INC Sum							299.99-
00073 RYAN MOTORS INC	196258	00133480	12000380	REPR PTS U#16759	05/31/13	231180	196.42-
00073 RYAN MOTORS INC	196259	00133481	12000381	REPR PTS U#16760,U#16761	05/31/13	231180	589.26-
RYAN MOTORS INC Sum							785.68-
00073 VERIZON WIRELESS	9704677269	00133588	12000385	GPS ON BUSES 5/11-6/10/13	05/31/13	231221	201.53-
VERIZON WIRELESS Sum							201.53-
Sum							55,473.22-

CITY OF HATTIESBURG
DOCKET OF CLAIMS
PERIOD ENDING MAY 31, 2013

Vendor	Invoice Number	Purchase Order	Claims Number	Item Description	Check Date	Check No.	Check Amount
WATER&SEWER CONSTRUCTION FUND							
00075 LYMAN WELL COMPANY	APPL#2 JAMES	00133705	12000086	CONSTR WTR WELL #3 JAMES ST	05/31/13	231130	104,500.00-
LYMAN WELL COMPANY Sum							104,500.00-
00075 MERRELL BROS INC	15953	00133704	12000085	S LAGOON SLUDGE RMVL 4/1-30	05/31/13	231140	924,581.01-
MERRELL BROS INC Sum							924,581.01-
00075 NEEL-SCHAFFER INC	1009989-99 W	00133650	12000084	SERV 3/1-31/13 WISPAK	05/31/13	231154	1,112.44-
NEEL-SCHAFFER INC Sum							1,112.44-
Sum							1,030,193.45-

Vendor	Invoice Number	Purchase Order	Claims Number	Item Description	Check Date	Check No.	Check Amount
COMMUNITY CENTERS' FUND							
00077 A D T SECURITY SERVICES/	96882668	00133673	12000338	SECURITY 6/13 CULTURAL CNTR	05/31/13	230993	93.96-
A D T SECURITY SERVICES/ Sum							93.96-
00077 CITY OF HATTIESBURG FUND	TRF 3RD 5/13	02013498	12000337	TRF 3RD 5/13 PAYROLL	05/29/13	36465	14,973.78-
CITY OF HATTIESBURG FUND Sum							14,973.78-
00077 CUTLER, SCOTT (REFUNDS)	CULTURAL CNT	02013496	12000333	DAMAGE DEPOSIT REFUND	05/31/13	231047	250.00-
CUTLER, SCOTT (REFUNDS) Sum							250.00-
00077 HARTFIELD, CHERCIEL (REF	CE ROY CNTR	02013496	12000336	DAMAGE DEPOSIT REFUND	05/31/13	231087	100.00-
HARTFIELD, CHERCIEL (REF Sum							100.00-
00077 MS POWER COMPANY	5/13 COMM CN	00201316	12000332	MNTHLY ELEC-COMM CNTRS	05/31/13	231150	2,563.40-
MS POWER COMPANY Sum							2,563.40-
00077 NEWELL PAPER COMPANY	562659	00133463	12000324	JANIT SUPP COMM CNTRS	05/31/13	231155	245.00-
NEWELL PAPER COMPANY Sum							245.00-
00077 RMWJ REUNION (REFUNDS)	CULTURAL CNT	02013496	12000334	DAMAGE DEPOSIT REFUND	05/31/13	231177	250.00-
RMWJ REUNION (REFUNDS) Sum							250.00-
00077 SALA, JENNIFER (REFUNDS	CE ROY CNTR	02013496	12000335	DAMAGE DEPOSIT REFUND	05/31/13	231183	100.00-
SALA, JENNIFER (REFUNDS Sum							100.00-
00077 SCHWANDT, MARILYN T	PETTY CASH 5	00133630	12000323	PETTY CASH COMM CNTRS	05/31/13	231184	20.96-
SCHWANDT, MARILYN T Sum							20.96-
00077 SHERWIN-WILLIAMS COMPANY	1131-1	00133063	12000326	PAINT SUPP SHERRILL CNTR	05/31/13	231188	637.54-
00077 SHERWIN-WILLIAMS COMPANY	1130-3	00133195	12000327	PAINT SUPP SHERRILL CNTR	05/31/13	231188	54.03-
00077 SHERWIN-WILLIAMS COMPANY	0391-2	00133063	12000328	PAINT SUPP SHERRILL CNTR	05/31/13	231188	753.80-
00077 SHERWIN-WILLIAMS COMPANY	1128-7	00133063	12000329	CREDIT	05/31/13	231188	753.80
00077 SHERWIN-WILLIAMS COMPANY	0623-8	00133195	12000330	PAINT SUPP SHERRILL CNTR	05/31/13	231188	129.61-
00077 SHERWIN-WILLIAMS COMPANY	1129-5	00133195	12000331	CREDIT	05/31/13	231188	129.61
SHERWIN-WILLIAMS COMPANY Sum							691.57-
00077 SOLAR SUPPLY INC	3442285	00133332	12000322	A/C FILTERS SHERRILL CNTR	05/31/13	231194	125.60-

Vendor	Invoice Number	Purchase Order	Claims Number	Item Description	Check Date	Check No.	Check Amount
SOLAR SUPPLY INC Sum							125.60-
00077 SPECIALTY SERVICES LLC	#1 FINAL SHE	00132911	12000320	SHEET ROCK REPR SHERRILL CNTR	05/31/13	231205	3,000.00-
SPECIALTY SERVICES LLC Sum							3,000.00-
00077 WILLMUT GAS & OIL COMPAN	5/13 COMM CN	00201316	12000325	MNTHLY GAS-COMM CNTRS	05/31/13	231234	49.00-
WILLMUT GAS & OIL COMPAN Sum							49.00-
Sum							22,463.27-

Vendor	Invoice Number	Purchase Order	Claims Number	Item Description	Check Date	Check No.	Check Amount
COMMUNITY DEVELOP. BLOCK GRANT							
00082 BREAKTHROUGH COMMUNITY S	01	00133597	12000187	306 JC KILLINGWORTH DR#1 ELECT	05/24/13	36461	2,500.00-
BREAKTHROUGH COMMUNITY S Sum							2,500.00-
00082 CITY OF HATTIESBURG FUND	TRF 3RD 5/13	02013498	12000190	TRF 3RD 5/13 PAYROLL	05/29/13	36472	7,016.01-
CITY OF HATTIESBURG FUND Sum							7,016.01-
00082 CORLEY, MAUDELL (CDBG)	05/21/13	00133596	12000186	302 HALL AVE TEMP RECOL5/7-6/6	05/24/13	36460	650.00-
CORLEY, MAUDELL (CDBG) Sum							650.00-
00082 ELLARD, ANDREW	TRAV ADVANCE	00133714	12000191	TRAV ADV-CD CONF-GREENWOOD	05/31/13	231060	289.32-
ELLARD, ANDREW Sum							289.32-
00082 FEDERAL EXPRESS	2-227-97306(	00133584	12000189	SERV 3/26/13 ELLARD CDBG	05/31/13	231065	26.42-
FEDERAL EXPRESS Sum							26.42-
00082 OFFICE DEPOT INC	654426547001	00132714	12000184	OFFICE CHAIRS	05/31/13	231157	519.96-
OFFICE DEPOT INC Sum							519.96-
00082 SMITH'S REMODELING	05/13/13	00133610	12000188	302 HALL AVE, CO#2-TUB	05/24/13	36462	8,920.00-
SMITH'S REMODELING Sum							8,920.00-
Sum							19,921.71-

CITY OF HATTIESBURG
DOCKET OF CLAIMS
PERIOD ENDING MAY 31, 2013

Vendor	Invoice Number	Purchase Order	Claims Number	Item Description	Check Date	Check No.	Check Amount
INDUSTRIAL PARK DEVELOPMENT							
00087 AREA DEVELOPMENT PARTNER	3153	00133594	12000037	REIMB 1/2 LEGAL FEES	05/31/13	231004	1,607.00-
AREA DEVELOPMENT PARTNER Sum							1,607.00-
00087 BUTLER,SNOW,O'MARA,STEVE	SERVS 3/13 P	00133491	12000032	LEGAL SERVS 3/13 STION PROJ	05/31/13	231023	525.00-
BUTLER,SNOW,O'MARA,STEVE Sum							525.00-
00087 CONTINENTAL RAILS & EXCA	4004	00133492	12000034	REPR RAIL SPURS IND PARK	05/31/13	231040	47,530.00-
CONTINENTAL RAILS & EXCA Sum							47,530.00-
00087 PARKER'S LANDSCAPE SERV	14734	00133494	12000035	LANDSCAPE MAINT 3/13 IND PARK	05/31/13	231158	180.00-
00087 PARKER'S LANDSCAPE SERV	14787	00133495	12000036	LANDSCAPE MAINT 4/13 IND PARK	05/31/13	231158	180.00-
PARKER'S LANDSCAPE SERV Sum							360.00-
00087 SOUTHGROUP (ST PAUL TRAV	FORRCOU-07 2	00133493	12000033	IND PK LIABILITY INS RNWL	05/31/13	231203	9,673.00-
SOUTHGROUP (ST PAUL TRAV Sum							9,673.00-
Sum							59,695.00-

Vendor	Invoice Number	Purchase Order	Claims Number	Item Description	Check Date	Check No.	Check Amount
GROUP INSURANCE TRUST FUND							
00109 CITY OF HATTIESBURG FUND	TRF MELISSA	02013499	52	TRF MELISSA CARTER -VISION	05/29/13	36470	8.62-
CITY OF HATTIESBURG FUND Sum							8.62-
Sum							8.62-

Vendor	Invoice Number	Purchase Order	Claims Number	Item Description	Check Date	Check No.	Check Amount
Grand Total Level Sum							3,166,459.70-

City of Hattiesburg, MS

200 Forrest St.
P.O. Box 1898
Hattiesburg, MS 39401

Meeting Agenda - Final

Tuesday, June 4, 2013

10:00 AM

Council Chambers

City Council - Amendments to the Agenda

Add Policy Agenda Items VI.-4 and VI.-5 at the request of the Administration as follows:

1	2013-0318	Extend the State of Emergency for an additional thirty (30) days to allow for the ongoing cleanup resulting from Tornado on February 10, 2013.
2	2013-0319	Approve Friday, July 5, 2013, as an additional Independence Day holiday, as proclaimed by the Governor of the State of Mississippi.

Attachments: July 5 holiday, Governor's Proclamation

City of Hattiesburg, MS

200 Forrest St.
P.O. Box 1898
Hattiesburg, MS 39401

Master

File Number: 2013-0318

File ID: 2013-0318 **Type:** Regular Agenda Item **Status:** Passed

Version: 1 **Reference:** **In Control:** City Council

File Created: 06/04/2013

Brief Title: Extend State of Emergency **Final Action:** 06/04/2013

Minute Book Number: MB2013-161

Title:

Extend the State of Emergency for an additional thirty (30) days to allow for the ongoing cleanup resulting from Tornado on February 10, 2013.

Notes:

Sponsors: **Enactment Date:**

Attachments: **Enactment Number:**

Contact: **Meeting Date:**

Drafter: **Effective Date:**

History of Legislative File

Version:	Acting Body:	Date:	Action:	Sent To:	Due Date:	Return Date:	Result:
1	City Council - Amendments to the Agenda	06/04/2013					
1	City Council	06/04/2013	Approve				Pass

Action Text: A MOTION was made by Council Member Carroll and seconded by Council Member Delgado to Extend the State of Emergency for an additional thirty (30) days to allow for the ongoing cleanup resulting from Tornado on February 10, 2013.

There being no discussion, the Motion received the affirmative vote of the Council as follows:

Yeas: 5 - Bradley, Delgado and Carroll

Nays: 0

Absent: 2 - Ware and Naylor

Yea: 3 President Bradley
Council Member Delgado
Council Member Carroll

ΓEL-No Vote: 0

Text of Legislative File 2013-0318

Title

Extend the State of Emergency for an additional thirty (30) days to allow for the ongoing cleanup resulting from Tornado on February 10, 2013.

Summary

Budget Information

Expenditure Type

Purchasing Item

Publication Information

City of Hattiesburg, MS

200 Forrest St.
P.O. Box 1898
Hattiesburg, MS 39401

Master

File Number: 2013-0319

File ID: 2013-0319 **Type:** Regular Agenda Item **Status:** Passed

Version: 1 **Reference:** **In Control:** City Council

File Created: 06/04/2013

Brief Title: Approve Friday, July 5, 2013, as an additional Independence Day holiday, as proclaimed by the Governor of the State of Mississippi.

Final Action: 06/04/2013

Minute Book Number: MB2013-161

Title:

Approve Friday, July 5, 2013, as an additional Independence Day holiday, as proclaimed by the Governor of the State of Mississippi.

Notes:

Sponsors: **Enactment Date:**

Attachments: July 5 holiday, Governor's Proclamation **Enactment Number:**

Contact: **Meeting Date:** 06/04/2013

Drafter: Debbie Bernardo **Effective Date:**

History of Legislative File

Version:	Acting Body:	Date:	Action:	Sent To:	Due Date:	Return Date:	Result:
1	City Council - Amendments to the Agenda	06/04/2013					
1	City Council	06/04/2013					

Action Text: A MOTION was made by Council member Delgado to Approve Friday, July 5, 2013, as an additional Independence Day holiday, as proclaimed by the Governor of the State of Mississippi.

Council member Carroll asked Mr. Myers if employees normally receive 12 or 13 holidays; Mr. Myers responded in the affirmative and said it varies, depending on what day of the week Christmas and New Years fall on, as to whether the governor decides to grant an extra day.

Council member Delgado noted that from time to time, [an extra day is given] for Independence Day; Mr. Myers agreed and said the last time was in 2006.

Council President Bradley stated his opposition [to the additional holiday] and noted that it will cost the City because some services will have to be offered.

Council member Carroll asked Ms. Everett what the extra costs will be; Ms. Everett stated that payroll costs for a day can run to $102,000 a day; she said she calculated that it would cost roughly $60,000 to declare a holiday and then pay employees who work to provide police, fire and other needed services. Council member Carroll expressed concern that areas of the city will go without sanitation services for close to a week; Ms. Everett stated that John Brown indicated that Thursday pickups will be made on Wednesday and that Friday pickups will be made on Monday, and that there is a possibility that a [small] amount of overtime pay will be involved.

Council President Bradley asked if the City has any policy limiting employees from taking vacation immediately following a holiday; Mr. Myers replied in the negative.

Council member Delgado asked for the costs of operating city buildings, including utilities, over and above employee salaries and benefits; Ms. Everett said she did not know that those costs would [represent] a major impact.

Council member Delgado spoke in favor of approving the additional holiday for employees and said her motion stands.

The Motion failed for lack of a second.

Text of Legislative File 2013-0319

Title

Approve Friday, July 5, 2013, as an additional Independence Day holiday, as proclaimed by the Governor of the State of Mississippi.

Summary

Approve Friday, July 5, 2013, as an additional Independence Day holiday, as proclaimed by the Governor of the State of Mississippi.

Budget Information

Expenditure Type

Purchasing Item

Publication Information

Bernardo, Debbie

From: Hopkins, Gena
Sent: Monday, June 03, 2013 10:27 AM
To: Bernardo, Debbie
Subject: July 5th

STATE OF MISSISSIPPI

Office of the Governor

A PROCLAMATION BY THE GOVERNOR

WHEREAS, under the provisions of Miss. Code Ann. Section 3-3-7, Independence Day, the fourth day of July, is declared a legal holiday in the State of Mississippi; and,

WHEREAS, during the Fourth of July holiday, many state employees will spend time with their families in Mississippi and in other states;

NOW, THEREFORE, I, Phil Bryant, Governor of the State of Mississippi, pursuant to the authority vested in me under the Constitution of the State of Mississippi and applicable statutes of the State of Mississippi, do hereby authorize the closing of all offices of the State of Mississippi on Thursday, July 4, 2013, in observance of Independence Day.

IN ADDITION,I hereby authorize the executive officers of all state agencies, in their discretion after considering the interests of the people of the State of Mississippi and the staffing needs of their respective agencies, to close all offices of the State of Mississippi on Friday, July 5, 2013, in further observance of Independence Day.

IN WITNESS WHEREOF, I have hereunto set my hand and caused the Great Seal of the State of Mississippi to be affixed.

DONE in the City of Jackson, on the 28th day of May in the year of our Lord, two thousand and thirteen, and of the Independence of the United States of America, the two hundred and thirtyseventh.



PHIL BRYANT
GOVERNOR

BY THE GOVERNOR

DELBERT HOSEMANN
SECRETARY OF STATE