City of Hattiesburg, MS

200 Forrest St.
P.O. Box 1898
Hattiesburg, MS 39401

Meeting Agenda - Final

Tuesday, August 7, 2018

4:00 PM

Council Chambers

City Council

I. Call to Order

II. Call to Prayer and Pledge of Allegiance

III. Agenda Order

Agenda Adjustments

VI.-16 2018-675 Adopt a Resolution authorizing the Mayor to execute a grant agreement between the City of Hattiesburg and the Economic Development Administration, for a certain project referred to as the Lamar Boulevard/Regions Bank Project, with the City of Hattiesburg matching $431,193.60; 20% of the total project cost of $2,155,968.00.

Attachments: COH & EDA Resolution

Resolution Authorizing Submittal and Match August 2018

Executed - Res#2018-104 Resolution Authorizing Submittal and Match August 2

Add-on at the request of Administration

VI.-17 2018-676 Authorize Mayor to execute Memorandum of Understanding between City of Hattiesburg and Hattiesburg Public School District to provide periodic landscape maintenance on school properties contingent upon receipt of executed Request Resolution from Hattiesburg Public School District.

Attachments: MOU- HPSD Grounds Keeping

Executed - MOU- HPSD Grounds Keeping

Add-on at the request of Administration

VI.-18 2018-673 Adopt a Resolution appointing Ronnie Perkins as Director of Public Works for the City of Hattiesburg.

Attachments: Perkins Resolution

Perkins-Resume

Executed - Res #2018-105 appointing Ronnie Perkins as Director of Public Wor

Add-on at the request of Administration

VI.-19 2018-674 Adopt a Resolution appointing Edmond "Chris" Mcgee as Director of Parks and Recreation for the City of Hattiesburg.

Attachments: MCgee Resolution

Mcgee-Resume

Executed - Res #2018-106 appointing Edmond Chris Mcgee as Director of Park

Add-on at the request of Administration

IV. Approval of Minutes

IV.-1 2018-668 Approval of minutes for July 2, 3, 11, 16 & 17, 2018, meetings of the City Council.

Attachments:
- min 7-2-18 Unsafe PH, AR, WS
- min 7-3-18
- min 7-11-18 SC
- min 7-16-18 AR, Budget Review HPD & Water-Sewer Dept.
- min 7-17-18

V. PRESENTATION AGENDA

VI. POLICY AGENDA

VI.-1 2018-649 Take from the table and adopt an Ordinance for the petition filed by Paul H. Williams, Owner, Richard E. Braswell, Owner, to change the zoning classification for 301 Gordon Street (Parcel 2-029H-03-371.00, PPIN 22168, Ward 2) from Section 4.5.7, R-3 (Multi-Family Residential) District to Section 4.5.9, B-2 (Community Business) District. The Planning Commission recommended to Approve on July 5, 2018.

Attachments:
- July HPC Minutes DRAFT
- 301 Gordon St - Zoning change - Planning Report
- Applicant sheet - 7-18-18
- Letter from property owner requesting revised zoning
- Revised Ordinance (B-2) - 301 Gordon St
- Executed - Ordinance #3238 301 Gordon St - Zoning change from R-3 to B-2

VI.-2 2018-651 Adopt the August 7, 2018 Amendments to the Budget for the City of Hattiesburg for the fiscal year ending September 30, 2018 and adopt resolution authorizing publication of amendments for funds in excess of 10% of the original appropriation fund balance.

Attachments:
- August 2018 Budget Amendments
- Executed - Res#2018-100 August 2018 Budget Amendments

VI.-3 2018-543 Adopt Resolution authorizing and approving defeasance of the Taxable General Obligation Refunding Bonds, Series 2010, dated July 15, 2010, in the amount of $2,560,000; authorize and approve Escrow Agreement; authorize and approve Contribution of Funds Agreement; authorize Mayor to execute said Agreements

Attachments: Resolution Series 2010 Bonds Defeasance

Executed - Res#2018-101 Resolution Series 2010 Bonds Defeasance

VI.-4 2018-657 Adopt a Resolution declaring surplus certain vehicles (per attached list) and authorize sale of said vehicles at auction, and removal of said vehicles from the City's inventory of the Public Works Solid Waste Division.

Attachments: Surplus Res- PW- Solid Waste Div.

Memo-PW-Solid Waste Division

Executed - Res #2018-102 Surplus Resolution for PW- Solid Waste Div.

VI.-5 2018-658 Adopt a Resolution authorizing Requisition No. 24 from the Project Fund Construction Account in connection with a certain loan agreement dated August 18, 2016, by and between the Mississippi Development Bank and the City of Hattiesburg.

Attachments: 2016 Bond Resolution No. 24

Executed - Res#2018-103 2016 Bond Resolution No. 24

VI.-6 2018-656 Authorize Mayor to execute in duplicate Airspace Agreement with Mississippi Department of Transportation (MDOT) for the shared use of the right of way for the County Club Road Pedestrian Bridge Project (STP-8760-00(004) LPA / 107710-701000).

Attachments: MDOT Airspace Agreement

MDOT Airspace Agreement-cover letter

Executed - MDOT Airspace Agreement Country Club Pedestrian Bridge Project

VI.-7 2018-654 Authorize Mayor to execute in duplicate a Memorandum of Understanding (MOU) with The United Way of Southeast Mississippi to establish agreed upon conditions under which the United Way may lease property from the City for the establishment of the Pine Belt Diaper Bank ("Diaper Bank").

Attachments: Diaper Bank MOU - UW edits - CLEAN

Executed - MOU with United Way of Southeast Mississippi for establishment of

VI.-8 2018-647 Authorize Mayor to execute Right of Way Easement (in duplicate) with Pearl River Valley EPA to provide electrical service to lift station on Lamar Boulevard.

Attachments: Lift Station Easement with Pearl River Valley

Executed - Lift Station Easement with Pearl River Valley

VI.-9 2018-666 Authorize Mayor to execute a recodification and supplementation services agreement between the City of Hattiesburg and Municode for online services of publishing and updating the Code of Ordinances of the City of Hattiesburg.

Attachments: Municode-Supp Agreement

Executed - Municode-Supp Agreement

VI.-10 2018-661 Authorize Mayor to execute Fire Protection Agreement between the City of Hattiesburg and the University of Southern Mississippi to provide fire protection and related services for a one (1) year term, beginning July 1,2018 and ending on June 30,2019, in the amount of $95,652.00.

Attachments: Fire Protection Agreement - HFD_USM 2018-2019 (2)

Executed - Fire Protection Agreement - HFD_USM 2018-2019 (2)

VI.-11 2018-663 Authorize Mayor to execute duplicate contract between the City of Hattiesburg Parks and Recreation Department and Global Security Company, to provide security services for various Parks and Recreation programs, events, or activities.

Attachments: Global Security Agreement

Global-Insurance

Executed - Global Security Agreement for security services

VI.-12 2018-660 Approve Professional Services Agreement with Shows, Dearman & Waits, Inc. for engineering services related to improvements to the city owned water system in the Audubon-Westwood & Lynwood Neighborhoods, Shadow Wood Drive & Huckleberry Lane; Authorize Mayor to execute in duplicate.

Attachments: 11275_Proposal Packet (003)

Executed - Agreement with Shows, Dearman & Waits, Inc., for engineering serv

VI.-13 2018-671 Authorize the Mayor to execute Change Order No 2 in an additional amount of $12,466.58 associated with the Hub City Transit Facility Construction Project.

Attachments: G701-2017 Change Order 2 combined

Executed - Change Order 2 Hub City Transit Facility Construction Project

VI.-14 2018-664 Approve or Deny changes to wages and salaries proposed in accordance with Ordinance.3154.

Attachments: Salaries-Data Sheet

VI.-15 2018-665 Ratify and confirm the Mayor's appointment of Adrienne Graham(W4) to the Recreation Board for a five (5) year term beginning August 7,2018 and ending August 6, 2023.

Attachments: Graham-Data Sheet

Graham-Resume

VII. ROUTINE AGENDA

VII.-1 2018-662 Set a public hearing on the proposed budget and proposed tax levies for fiscal year 2019 for 5:30 p.m. Tuesday, September 4, 2018, in Council Chambers at City Hall; Authorize advertisement of Notice of Public Hearing.

Attachments: Public Hearing Notice FY 2019 Budget

VII.-2 2018-640 Authorize Mayor to execute Rental Agreement between the City of Hattiesburg and RJ Young for a copier located in the Fire/Police Training Academy, for a period of 48months, at a cost of $198.00 per month.

Attachments: Police-Fire Copier rental agreement

Executed - Police-Fire Copier rental agreement

VII.-3 2018-670 Authorize Mayor to execute Copier Rental Agreement between the City of Hattiesburg and RJ Young for copier located on the 2nd floor in City Hall at the City Clerk's Office at a cost of $204.00 per month.

Attachments: Copier rental agreement-Clerk'sOffice.

Executed - Copier rental agreement-Clerk'sOffice

VII.-4 2018-631 Authorize Mayor to execute Service Agreement between City of Hattiesburg and RJ Young for a copier located at the Recreation Administration Office at a cost of $583.20 per year.

Attachments: RJ Young Agreement 2018

Executed - RJ Young Agreement for Recreation Dept 2018

VII.-5 2018-646 Ratify and confirm the execution of an agreement between the Hattiesburg Police Department and the United States Department of Justice, Drug Enforcement Administration (DEA) concerning the use and abuse of controlled substances under the provision of 21 U.S.C. 873.

Attachments: Agreement - DEA & HPD

Executed - Agreement - DEA & HPD

VII.-6 2018-643 Ratify and confirm the execution of Memorandum of Understanding between the Bureau of Alcohol, Tobacco, Firearms and Explosives (ATF) and the Hattiesburg Police Department to cooperate in eliminating the illegal flow of firearms to the criminal element.

Attachments: MOU-ATF & HPD

Executed MOU Hattiesburg PD ATF

VII.-7 2018-635 Acknowledge donation of $7,000.00 from Chip N Fore Heroes to the Hattiesburg Police Department STAR team, to purchase two (2) Model 700 PCR 308 Bolt Rifles.

.

Attachments: Chip N Fore Heroes Donation

Chip N Fore Heroes Check

VII.-8 2018-655 Acknowledge receipt of the Annual Report and Audit of the Hattiesburg Tourism Commission for FYE September 30, 2017.

Attachments: HTC_FY17_AnnualReport_CityCouncil

VII.-9 2018-638 Acknowledge receipt of the audit of Combined Water & Sewer System of the City of Hattiesburg for the fiscal year ending September 30, 2016 from Topp McWhorter Harvey, PLLC.

Attachments: FYE- 2016 Combined Water and Sewer Audit.

VII.-10 2018-669 Acknowledge receipt of two-quote bids for the Old Hattiesburg American roof repair project and accept the bid of Malone Roofing Services, in the amount of $16,000.00 as the lowest and best bid recieved. (two-quote bids for construction project).

Attachments: Pace Roofing

Eddie Pearson Roofing

Malone Roofing Services.

VII.-11 2018-644 Acknowledge receipt of the two quote bid purchase docket report for the period of June 21, 2018, through July 26, 2018 as provided for in Section 31-7-13 (b) of the Mississippi Code of 1972.

Attachments: 08-07-UAB Docket

VII.-12 2018-642 Approve Specifications and Authorize Publication of Advertisement for Various Term Bid Items

Attachments: Item 21 - Sand, Gravel, and Fill Dirt Notice to Bidders
Item 21 - Sand, Gravel, and Fill Dirt Specs
Item 23 - Corrugated HDPE Notice to Bidders
Item 23 - Corrugated HDPE Specs
Item 24 - Rock for Riprap Notice to Bidders
Item 24 - Rock for Riprap Specs

VII.-13 2018-659 Approve plans and specifications for the Bobby L. Chain Airport Apron Restoration Part 1 Project; Authorize advertisement for bids for same.

Attachments: Section A - Advertisement for Bidders 7.30.2018 revised (002)
Plans
Specifications Part 1

VII.-14 2018-648 Approve and authorize issuance of manual checks for CDBG Program Claims per attached memorandum. {Entitlement CDBG}

Attachments: MEMORANDUM FOR CDBG CLAIMS AUGUST 7, 2018.pdf

VII.-15 2018-645 Approve the sale of grave spaces, per attached Memo's, Receipts and Deeds.

Attachments: Memo's (08-07-18)
Receipts(08-07-18)
Deeds (08-07-18)

VII.-16 2018-639 Approve claims docket for the period ending July 31, 2018.

Attachments: DOCKET 18.07-31

VIII. Adjournment

City of Hattiesburg, MS

200 Forrest St.
P.O. Box 1898
Hattiesburg, MS 39401

Master

File Number: 2018-675

File ID:	2018-675	**Type:**	Resolution	**Status:**	Passed
Version:	1	**Reference:**		**In Control:**	City Council
Requester:				**File Created:**	08/07/2018
Brief Title:	Resolution authorizing the Mayor to execute a grant agreement between the City of Hattiesburg and the Economic Development Administration.			**Final Action:**	08/07/2018
				Minute Book Number:	MB 2018-195

Title:

Adopt a Resolution authorizing the Mayor to execute a grant agreement between the City of Hattiesburg and the Economic Development Administration, for a certain project referred to as the Lamar Boulevard/Regions Bank Project, with the City of Hattiesburg matching $431,193.60; 20% of the total project cost of $2,155,968.00.

Notes:			
		Agenda Date:	08/07/2018
Indexes:		**Agenda Number:**	
Sponsors:		**Enactment Date:**	
Attachments:	COH & EDA Resolution, Resolution Authorizing Submittal and Match August 2018, Executed - Res#2018-104 Resolution Authorizing Submittal and Match August 2018	**Enactment Number:**	
Contact:		**Meeting Date:**	
Drafter:		**Effective Date:**	

History of Legislative File

Version:	Acting Body:	Date:	Action:	Sent To:	Due Date:	Return Date:	Result:
1	City Council	08/07/2018					
1	City Council	08/07/2018	Adopt				Pass

Action Text: A MOTION was made by Council Vice President Dryden and seconded by Council Member George to Adopt a Resolution (#2018-104) authorizing the Mayor to execute a grant agreement between the City of Hattiesburg and the Economic Development Administration, for a certain project referred to as the Lamar Boulevard/Regions Bank Project, with the City of Hattiesburg matching $431,193.60; 20% of the total project cost of $2,155,968.00.

Following discussion, the Motion received the affirmative vote of the Council as follows:

Yeas: 5 - George, Delgado, Carroll, Dryden and Brown

Nays: 0

Yea: 5 Council Member George
Council Member Delgado
Council President Carroll
Council Vice President Dryden
Council Member Brown

Text of Legislative File 2018-675

Title

Adopt a Resolution authorizing the Mayor to execute a grant agreement between the City of Hattiesburg and the Economic Development Administration, for a certain project referred to as the Lamar Boulevard/Regions Bank Project, with the City of Hattiesburg matching $431,193.60; 20% of the total project cost of $2,155,968.00.

Summary

Resolution authorizing the Mayor to execute a grant agreement between the City of Hattiesburg and the Economic Development Administration.

Budget Information

Expenditure Type

Purchasing Item

Publication Information

RESOLUTION

WHEREAS, the City of Hattiesburg authorizes the application, acceptance,, and execution of a certain grant agreement with the Economic Development Administration (EDA) for an economic development project in the City of Hattiesburg; and,

WHEREAS, the City of Hattiesburg will commit $431,193.60 or 20 percent (20%) in matching dollars to the total project cost of $2,155,968.

NOW, THEREFORE, BE IT RESOLVED BY THE COUNCIL OF THE CITY OF HATTIESBURG, that the City Council authorizes the Mayor of the City of Hattiesburg to execute this award agreement with EDA, this the 7th day of August, A.D., 2018.

The above and foregoing Resolution, after having first been reduced to writing, was introduced by Council member _____, seconded by Council member _____ and adopted by the following roll call vote, to wit:

YEAS: NAYS: ABSENT:

The President thereby declared the motion carried and the Resolution adopted this the 7th day of August, A.D., 2018.

(SEAL)

ATTEST: ADOPTED:

_____ _____

CLERK OF COUNCIL PRESIDENT

The above and foregoing Resolution having been submitted to and approved by the Mayor, this the 7th day of August, 2018.

ATTEST: APPROVED:

_____ _____

CITY CLERK MAYOR

RESOLUTION

WHEREAS, the City of Hattiesburg authorizes the application, acceptance,, and execution of a certain grant agreement with the Economic Development Administration (EDA) for an economic development project in the City of Hattiesburg; and,

WHEREAS, the City of Hattiesburg will commit $431,193.60 or 20 percent (20%) in matching dollars to the total project cost of $2,155,968.

NOW, THEREFORE, BE IT RESOLVED BY THE COUNCIL OF THE CITY OF HATTIESBURG, that the City Council authorizes the Mayor of the City of Hattiesburg to execute this award agreement with EDA, this the 7th day of August, A.D., 2018.

The above and foregoing Resolution, after having first been reduced to writing, was introduced by Council member _____, seconded by Council member _____ and adopted by the following roll call vote, to wit:

YEAS: NAYS: ABSENT:

The President thereby declared the motion carried and the Resolution adopted this the 7th day of August, A.D., 2018.

(SEAL)

ATTEST: ADOPTED:

_____ _____

CLERK OF COUNCIL PRESIDENT

The above and foregoing Resolution having been submitted to and approved by the Mayor, this the 7th day of August, 2018.

ATTEST: APPROVED:

_____ _____

CITY CLERK MAYOR

There came on for consideration at a duly constituted meeting of the Mayor and Members of the City Council of the City of Hattiesburg, Mississippi, held on the **7th** day of **August, 2018**, the following Resolution:

RESOLUTION 2018-104

WHEREAS, the City of Hattiesburg authorizes the application, acceptance,, and execution of a certain grant agreement with the Economic Development Administration (EDA) for an economic development project in the City of Hattiesburg; and,

WHEREAS, the City of Hattiesburg will commit $431,193.60 or 20 percent (20%) in matching dollars to the total project cost of $2,155,968.

NOW, THEREFORE, BE IT RESOLVED BY THE COUNCIL OF THE CITY OF HATTIESBURG, that the City Council authorizes the Mayor of the City of Hattiesburg to execute this award agreement with EDA, this the 7th day of August, 2018.

The above and foregoing Resolution, after having first been reduced to writing, was introduced by Council member Delgado, seconded by Council member George and adopted by the following roll call vote, to wit:

YEAS:	**NAYS:**	**ABSENT:**
George	None	None
Delgado		
Carroll		
Dryden		
Brown		

The President thereby declared the motion carried and the Resolution adopted this the **7th** day of **August, 2018.**

(SEAL)

ATTEST: **ADOPTED:**

CLERK OF COUNCIL **PRESIDENT OF COUNCIL**

The above and foregoing Resolution having been submitted to and approved by the Mayor, this the **7th** day **of August, 2018**.

ATTEST: **APPROVED:**

CITY CLERK **MAYOR**

City of Hattiesburg, MS

200 Forrest St.
P.O. Box 1898
Hattiesburg, MS 39401

Master

File Number: 2018-676

File ID:	2018-676	**Type:**	Regular Agenda Item	**Status:**	Policy Agenda
Version:	1	**Reference:**		**In Control:**	City Council
Requester:				**File Created:**	08/07/2018
Brief Title:	Authorize Mayor to execute Memorandum of Understanding between City of Hattiesburg and Hattiesburg Public School District to provide periodic landscape maintenance on school properties contingent upon receipt of executed Request Resolution from Hattiesbur			**Final Action:**	08/07/2018
				Minute Book Number:	MB2018-195

Title:

Authorize Mayor to execute Memorandum of Understanding between City of Hattiesburg and Hattiesburg Public School District to provide periodic landscape maintenance on school properties contingent upon receipt of executed Request Resolution from Hattiesburg Public School District.

Notes:			
		Agenda Date:	08/07/2018
Indexes:		**Agenda Number:**	VI.-17
Sponsors:		**Enactment Date:**	
Attachments:	MOU- HPSD Grounds Keeping, Executed - MOU- HPSD Grounds Keeping	**Enactment Number:**	
Contact:		**Meeting Date:**	
Drafter:		**Effective Date:**	

History of Legislative File

Version:	Acting Body:	Date:	Action:	Sent To:	Due Date:	Return Date:	Result:
1	City Council	08/07/2018					
1	City Council	08/07/2018	Authorize				Pass

Action Text: A MOTION was made by Council Vice President Dryden and seconded by Council Member George to Authorize Mayor to execute Memorandum of Understanding between City of Hattiesburg and Hattiesburg Public School District to provide periodic landscape maintenance on school properties contingent upon receipt of executed Request Resolution from Hattiesburg Public School District.

There being no discussion, the Motion received the affirmative vote of the Council as follows:

Yeas: 5 - George, Delgado, Carroll, Dryden and Brown

Nays: 0

Yea: 5 Council Member George
Council Member Delgado
Council President Carroll
Council Vice President Dryden
Council Member Brown

Text of Legislative File 2018-676

Title

Authorize Mayor to execute Memorandum of Understanding between City of Hattiesburg and Hattiesburg Public School District to provide periodic landscape maintenance on school properties contingent upon receipt of executed Request Resolution from Hattiesburg Public School District.

Summary

MOU between the City of Hattiesburg and the Hattiesburg Public School District for periodic landscape maintenance.

Budget Information

Expenditure Type

Purchasing Item

Publication Information

Memorandum of Understanding

WHEREAS, it is anticipated that the Hattiesburg Municipal Separate School District, hereinafter referred to as "District", will adopt a Resolution on August 7, 2018, requesting the City of Hattiesburg, hereinafter referred to as "the City," to provide assistance in outside Grounds Maintenance limited to grass cutting and related landscape activities for properties owned by District at Hattiesburg High School, Mary Bethune Attendance Center, N. R. Burger Middle School, Lillie Burney Elementary School, George H. Hawkins Elementary School, Rowan Elementary School, and F. B. Woodley Elementary School, and Central Office and Park ; and

WHEREAS, *Miss. Code Ann.* § 21-37-4 (Supp. 2017), gives municipalities the authority to "maintain…the grounds of public schools located within the corporate boundaries of the municipality;" and

WHEREAS, the City desires to provide assistance in outside Grounds Maintenance on the properties owned by District at the schools listed above, all of which are located within the corporate boundaries of the City of Hattiesburg, as requested by the School District; and

WHEREAS, the parties hereto desire to reduce to writing their agreement and understanding, City and School do hereby agree and obligate themselves as follows, to-wit:

I.

City herby agrees to provide, as requested by District, equipment, labor, and supplies for facility/grounds maintenance services to the District on properties it owns at Hattiesburg High School, 301 Hutchinson Avenue; Mary Bethune Alternative Center, 600 Dumas Avenue; N. R. Burger Middle School, 174 W. S. F. Tatum Blvd.; Lillie Burney Elementary School, 901 Ida Avenue; George H. Hawkins Elementary School, 526 Forrest Street; Rowan Elementary School, 500 Martin Luther King Avenue; F. B. Woodley Elementary School, 2006 O'Ferral Street; Central Office and Park, 301 Mamie. These services include mowing, edging, weed eating, planting flowers, mulching, and other traditional landscape techniques as needed.

II.

The term of this Memorandum of Understanding ("MOU") shall be for a period of four (4) years commencing August 7, 2018, and ending December 31, 2022. City and School each shall have the absolute right to terminate this MOU without cause upon giving the other party thirty (30) days written notice of its intention to terminate said MOU.

III.

City will maintain the landscape and green spaces at its expense, as deemed necessary to provide an aesthetic, safe, and clean environment. Those maintenance tasks include, but are not limited to mowing grass, edging, weed eating, mulching, planting, and blowing.

IV.

This Agreement is subject to the District adopting a Resolution requesting the City's assistance as set above and providing an executed copy of that Resolution to the City.

IN WITNESS WHEROF, the parties hereto have signed and executed this contract, in duplicate originals, on this the _____day of _____, 2018.

Hattiesburg Municipal
Separate School District

By:_____

City of Hattiesburg, Mississippi

_____
Mayor

Memorandum of Understanding

WHEREAS, it is anticipated that the Hattiesburg Municipal Separate School District, hereinafter referred to as "District", will adopt a Resolution on August 7, 2018, requesting the City of Hattiesburg, hereinafter referred to as "the City," to provide assistance in outside Grounds Maintenance limited to grass cutting and related landscape activities for properties owned by District at Hattiesburg High School, Mary Bethune Attendance Center, N. R. Burger Middle School, Lillie Burney Elementary School, George H. Hawkins Elementary School, Rowan Elementary School, and F. B. Woodley Elementary School, and Central Office and Park ; and

WHEREAS, *Miss. Code Ann.* § 21-37-4 (Supp. 2017), gives municipalities the authority to "maintain…the grounds of public schools located within the corporate boundaries of the municipality;" and

WHEREAS, the City desires to provide assistance in outside Grounds Maintenance on the properties owned by District at the schools listed above, all of which are located within the corporate boundaries of the City of Hattiesburg, as requested by the School District; and

WHEREAS, the parties hereto desire to reduce to writing their agreement and understanding, City and School do hereby agree and obligate themselves as follows, to-wit:

I.

City herby agrees to provide, as requested by District, equipment, labor, and supplies for facility/grounds maintenance services to the District on properties it owns at Hattiesburg High School, 301 Hutchinson Avenue; Mary Bethune Alternative Center, 600 Dumas Avenue; N. R. Burger Middle School, 174 W. S. F. Tatum Blvd.; Lillie Burney Elementary School, 901 Ida Avenue; George H. Hawkins Elementary School, 526 Forrest Street; Rowan Elementary School, 500 Martin Luther King Avenue; F. B. Woodley Elementary School, 2006 O'Ferral Street; Central Office and Park, 301 Mamie. These services include mowing, edging, weed eating, planting flowers, mulching, and other traditional landscape techniques as needed.

II.

The term of this Memorandum of Understanding ("MOU") shall be for a period of four (4) years commencing August 7, 2018, and ending December 31, 2022. City and School each shall have the absolute right to terminate this MOU without cause upon giving the other party thirty (30) days written notice of its intention to terminate said MOU.

III.

City will maintain the landscape and green spaces at its expense, as deemed necessary to provide an aesthetic, safe, and clean environment. Those maintenance tasks include, but are not limited to mowing grass, edging, weed eating, mulching, planting, and blowing.

IV.

This Agreement is subject to the District adopting a Resolution requesting the City's assistance as set above and providing an executed copy of that Resolution to the City.

IN WITNESS WHEROF, the parties hereto have signed and executed this contract, in duplicate originals, on this the 7th day of August, 2018.

Hattiesburg Municipal
Separate School District

By:_____

City of Hattiesburg, Mississippi

Mayor

City of Hattiesburg, MS

200 Forrest St.
P.O. Box 1898
Hattiesburg, MS 39401

Master

File Number: 2018-673

File ID:	2018-673	**Type:**	Resolution	**Status:**	Passed
Version:	1	**Reference:**		**In Control:**	City Council
Requester:				**File Created:**	08/07/2018
Brief Title:	Appointment of Ronnie Perkins as Director of Public Works.			**Final Action:**	08/07/2018
				Minute Book Number:	MB2018-105

Title:

Adopt a Resolution appointing Ronnie Perkins as Director of Public Works for the City of Hattiesburg.

Notes:			
		Agenda Date:	08/07/2018
Indexes:		**Agenda Number:**	
Sponsors:		**Enactment Date:**	
Attachments:	Perkins Resolution, Perkins-Resume, Executed - Res #2018-105 appointing Ronnie Perkins as Director of Public Works	**Enactment Number:**	
Contact:		**Meeting Date:**	
Drafter:		**Effective Date:**	

History of Legislative File

Version:	Acting Body:	Date:	Action:	Sent To:	Due Date:	Return Date:	Result:
1	City Council	08/07/2018					
1	City Council	08/07/2018	Adopt				Pass

Action Text: A MOTION was made by Council Member Brown and seconded by Council Member George to Adopt a Resolution (#2018-105) appointing Ronnie Perkins as Director of Public Works for the City of Hattiesburg.

There being no discussion, the Motion received the affirmative vote of the Council as follows:

Yeas: 4 - George, Carroll, Dryden and Brown

Nays: 0

Abstain: 1 - Delgado

Yea:	4	Council Member George
		Council President Carroll
		Council Vice President Dryden
		Council Member Brown
Abstain:	1	Council Member Delgado

Text of Legislative File 2018-673

Title

Adopt a Resolution appointing Ronnie Perkins as Director of Public Works for the City of Hattiesburg.

Summary

Appointment of Ronnie Perkins as Director of Public Works.

Budget Information

Expenditure Type

Purchasing Item

Publication Information

RESOLUTION
RESOLUTION APPOINTING DIRECTOR OF PUBLIC WORKS DEPARTMENT FOR CITY OF HATTIESBURG

WHEREAS, Section 21-8-23 of the Mississippi Code of 1972, as annotated and amended, provides that a department director shall be appointed by the Mayor of the City of Hattiesburg, Mississippi, and confirmed by an affirmative vote of a majority of the City Council present and voting: and

WHEREAS, Ronnie Perkins is appointed by the Mayor and is recognized by the Council as a qualified and proper person to fulfill the duties of the Director of Public Works Department.

NOW, THEREFORE, BE IT RESOLVED BY THE COUNCIL OF THE CITY OF HATTIESBURG:

Section 1. That Ronnie Perkins be and is hereby confirmed to serve as Director of Public Works Department to fulfill the duties as defined by Section 21-8-23 of the Mississippi Code of 1972 as annotated and amended.

Section 2. That public interest and necessity requiring same, this Resolution shall become effective August 7, 2018.

The above and foregoing Resolution, after having been first reduced to writing, was introduced by Council member _____, seconded by Council member _____, and was adopted by the following vote, to-wit:

YEAS: NAYS:

The President thereby declared the motion carried and the Resolution adopted, this the 7th ay of August, 2018.

(S E A L)

ATTEST: ADOPTED:

_____ _____
CLERK OF COUNCIL PRESIDENT

The above and foregoing Resolution having been submitted to and approved by the Mayor, this the 7th day of August, 2018.

ATTEST: APPROVED:

_____ _____
CITY CLERK MAYOR

Ronnie Perkins
216 Hood Road, Hattiesburg, MS 39401 601-307-3667

Objective

Objective: To contribute to an organization that can use a hard-working, team player, that offers proven leadership abilities, excellent communication skills, and proven ability to work graciously with all people.

Work Experience:

Experience

Resinall- Shipping and Receiving Supervisor

2004 – present

Shipping and Receiving clerk duties, safety orientation, new hire training, and give testing to new and current employees.

City of Hattiesburg Recreational Department-Sports and Programming Supervisor

2002-2004

Responsible for team scheduling, organizing youth sports and training coaches for the various sport. Supervise all facilities in use and assist in coordination and supervising all umpires, referees and score keepers. Responsible for directing community sporting events.

Forrest County Schools-Safety and Maintenance Associate

2002-1999

Responsible for all aspects of maintenance. Perform daily inspection centered on each school.

Hudson Lumber and Truss-Safety Director

1999-2000

Local Business Team Management Member. Development and manage the safety program for an 80 person manufacturing facility. Production of material for all tailgates plant wife and central Safety Committee Meetings, daily, weekly and monthly safety survey, policy development, local recruiting and hiring hourly employees.

Louisiana-Pacific Corporation-Safety Director

1990-1999

Local Business Team Management Member. Development and manage the safety program for the-110 person manufacturing facility. Production of material for all tailgates plant wide and central Safety Committee Meetings, daily, weekly, and monthly safety survey, policy development, local, recruiting and hiring hourly employees.

Education

1983-1985 Alcorn State University- Music Major

1979-1983 Forrest County Agricultural High School

Certifications and Affiliations

- Parent Teachers Association(President 1998-1999)
- OSHA Certification & Compliance School(1999-2002)
- MS CDL Class A Commercial License
- American Society of Safety Engineers(1999)
- City of Hattiesburg/Parks & Recreation Advisory Board(2010-2014)
- Forrest County School Board-Elected Member(2008-present)
- Vice President of Forrest County AHS Board (2014-present)
- City of Hattiesburg Rental Property Advisory board (2016-present)

Ronnie Perkins
Street Address, City, ST ZIP Code – Telephone – Email

There came on for consideration at a duly constituted meeting of the Mayor and Members of the City Council of the City of Hattiesburg, Mississippi, held on the 7th day of **August, 2018**, the following Resolution:

RESOLUTION 2018-105

APPOINTING DIRECTOROF PUBLIC WORKS DEPARTMENT FOR CITY OF HATTIESBURG

WHEREAS, Section 21-8-23 of the Mississippi Code of 1972, as annotated and amended, provides that a department director shall be appointed by the Mayor of the City of Hattiesburg, Mississippi, and confirmed by an affirmative vote of a majority of the City Council present and voting: and

WHEREAS, Ronnie Perkins is appointed by the Mayor and is recognized by the Council as a qualified and proper person to fulfill the duties of the Director of Public Works Department.

NOW, THEREFORE, BE IT RESOLVED BY THE COUNCIL OF THE CITY OF HATTIESBURG:

Section 1. That Ronnie Perkins be and is hereby confirmed to serve as Director of Public Works Department to fulfill the duties as defined by Section 21-8-23 of the Mississippi Code of 1972 as annotated and amended.

Section 2. That public interest and necessity requiring same, this Resolution shall become effective August 7, 2018.

The above and foregoing Resolution, after having been first reduced to writing, was introduced by Council Member Brown, seconded by Council Member George, and was adopted by the following vote, to-wit:

YEAS:	NAYS:	ABSTAIN:	ABSENT:
George	None	Delgado	None
Delgado			
Carroll			
Dryden			
Brown			

The President thereby declared the motion carried and the Resolution adopted, this the 7th day of **August, 2018**.

(SEAL)

ATTEST:

CLERK OF COUNCIL

ADOPTED:

PRESIDENT OF COUNCIL

The above and foregoing Resolution having been submitted to and approved by the Mayor, this the 7th day of **August, 2018**.

ATTEST:

CITY CLERK

APPROVED:

MAYOR

City of Hattiesburg, MS

200 Forrest St.
P.O. Box 1898
Hattiesburg, MS 39401

Master

File Number: 2018-674

File ID:	2018-674	**Type:**	Resolution	**Status:**	Passed
Version:	1	**Reference:**		**In Control:**	City Council
Requester:				**File Created:**	08/07/2018
Brief Title:	Appointment of Chris Mcgee as Director of Parks and Recreation.			**Final Action:**	08/07/2018
				Minute Book Number:	MB2018-196

Title:

Adopt a Resolution appointing Edmond "Chris" Mcgee as Director of Parks and Recreation for the City of Hattiesburg.

Notes:

		Agenda Date:	08/07/2018
Indexes:		**Agenda Number:**	
Sponsors:		**Enactment Date:**	
Attachments:	MCgee Resolution, Mcgee-Resume, Executed - Res #2018-106 appointing Edmond Chris Mcgee as Director of Parks and Recreation	**Enactment Number:**	
Contact:		**Meeting Date:**	
Drafter:		**Effective Date:**	

History of Legislative File

Ver-sion:	Acting Body:	Date:	Action:	Sent To:	Due Date:	Return Date:	Result:
1	City Council	08/07/2018					
1	City Council	08/07/2018	Adopt				Pass

Action Text: A MOTION was made by Council Member George and seconded by Council Vice President Dryden to Adopt a Resolution (#2018-106) appointing Edmond "Chris" Mcgee as Director of Parks and Recreation for the City of Hattiesburg.

There being no discussion, the Motion received the affirmative vote of the Council as follows:

Yeas: 5 - George, Delgado, Carroll, Dryden and Brown

Nays: 0

Yea: 5 Council Member George
Council Member Delgado
Council President Carroll
Council Vice President Dryden
Council Member Brown

Text of Legislative File 2018-674

Title

Adopt a Resolution appointing Edmond "Chris" Mcgee as Director of Parks and Recreation for the City of Hattiesburg.

Summary

Appointment of Chris Mcgee as Director of Parks and Recreation.

Budget Information

Expenditure Type

Purchasing Item

Publication Information

RESOLUTION

RESOLUTION APPOINTING DIRECTOR OF PARKS AND RECREATION DEPARTMENT FOR CITY OF HATTIESBURG

WHEREAS, Section 21-8-23 of the Mississippi Code of 1972, as annotated and amended, provides that a department director shall be appointed by the Mayor of the City of Hattiesburg, Mississippi, and confirmed by an affirmative vote of a majority of the City Council present and voting: and

WHEREAS, Chris McGee is appointed by the Mayor and is recognized by the Council as a qualified and proper person to fulfill the duties of the Director of Parks and Recreation Department.

NOW, THEREFORE, BE IT RESOLVED BY THE COUNCIL OF THE CITY OF HATTIESBURG:

Section 1. That Chris McGee be and is hereby confirmed to serve as Director of Parks and Recreation Department to fulfill the duties as defined by Section 21-8-23 of the Mississippi Code of 1972 as annotated and amended.

Section 2. That public interest and necessity requiring same, this Resolution shall become effective immediately.

The above and foregoing Resolution, after having been first reduced to writing, was introduced by Council member _____, seconded by Council member _____, and was adopted by the following vote, to-wit:

YEAS: NAYS:

The President thereby declared the motion carried and the Resolution adopted, this the 7th day of August, 2018.

(SEAL)

ATTEST: ADOPTED:

_____ _____

CLERK OF COUNCIL PRESIDENT

The above and foregoing Resolution having been submitted to and approved by the Mayor, this the 7th day of August, 2018.

ATTEST: APPROVED:

_____ _____

CITY CLERK MAYOR

EDMOND "CHRIS" MCGEE
816 ARNOLD STREET
HATTIESBURG, MS 39401
(601) 297 - 6898
ecmcgee1983@yahoo.com

EDUCATION:

The University of Southern Mississippi
Master of Science
Emphasis in Sports Administration

The University of Southern Mississippi
Bachelor of Science
Emphasis in Coaching Sports Administration

EXPERIENCE:

Adjunct Professor: The University of Southern Mississippi, Department of Kinesiology (January 2014 – May 2017)

Teach the following courses throughout the school year:

KIN 322	Recreation Program Planning
KIN 322	Recreation Leadership
KIN 413	Organization and Administration of Recreation I
KIN 433	Organization and Administration of Recreation II

Associate Director of Facilities: The University of Southern Mississippi, Department of Recreational Sports (July 1994 – November 2013)

- Oversight and supervision of all department's facilities (Payne Center, Johnson Natatorium, Pride Field, and Sand Volleyball Courts)
- Assisted the Director with overall management of 1.5-million-dollar budget
- Oversaw all maintenance and repairs to all department's facilities
- Oversaw the supervision, payroll, training, evaluation, scheduling, and hiring of 7 professional staff, 2 graduate assistants, and over 80 student workers
- Oversaw the Special Events/Facility Rentals program
- Coordinated youth sports camps
- Oversaw the risk management program
- Oversaw the Recreational Sports Custodial Services unit
- Coordinated the department inventory control program
- Coordinated the Student Orientation program which includes job training, customer service, and First Aid, CPR, AED certifications for all student workers
- Oversaw the central staff on duty program which provided the overall management and supervision of all staff, programs, and Recreational Sports facilities to include opening and closing, handling customer related situations, and emergencies.

Recreation Specialist III: City of Hattiesburg, Parks and Recreation Department, (July 1993 – July 1994)

- Oversaw the Adult Recreation programs (Basketball, Softball, and Special Events)
- Trained and hired Sports Officials

- Served as the Liaison between Parks and Recreation and D.R.E.A.M.
- Instructor, Institute for African American Mobilization
- Represented Parks and Recreation on the Mayor's Community Involvement Imitative
- Assisted the Division Manager with purchases and inventory control

Academic Advisor: The University of Southern Mississippi, Student Services for Athletics, (June 1990 – July 1993)

- Advised student athletes for academic success
- Created class attendance reports
- Oversaw the Study Hall program
- Assisted with Academic Tutoring program
- Assisted with all athletic teams recruiting
- Oversaw the Athletics Book Loan program
- Served as Liaison between coaches and the faculty

Informal Recreational Director: The University of Southern Mississippi, Department of Recreational Sports (August 1988 – June 1990)

- Oversaw Recreational Sports facilities (Sports Arena, Sports Arena Field, Tennis Courts, Outside Basketball Courts, and weight room)
- Handled the supervision, payroll, training, evaluation, scheduling, and hiring of facility student workers
- Oversaw the sale of guest passes
- Oversaw the Intramural Sports program and staff
- Oversaw the Inventory control program
- Assisted with Sports Clubs and Intramural teams travel
- Assisted with NIRSA Regional Flag Tournament
- Assisted with student organizations, youth camps and special events activities

CAMPUS INVOLVEMENT:

- The University of Southern Mississippi Regional Flag Football Tournament in Hattiesburg, MS (1988-1990 Logistics Director, 1991 – 1994 Official, and 2005 Tournament Director)
- Campus Committees:

  Student Affairs Retreat Planning Committee
  University Design and Review Committee
  University Master Planning Committee
  University Parking Appeals Committee
  Student Activities Committee
  Athletic Game Day Committee
  Physical Plant Search Committee
  Student Affairs Comcast Golf Scholarship Committee
  University's Staff Council

PROFESSIONAL AND COMMUNITY ORGANIZATIONS:

- Hattiesburg Sports Officials Association (1988 – Present)
- National Intramural Recreational Sports Association (N.I.R.S.A.) (1997 – 2013)
- Mississippi High School Activities Association (MHSAA) (1988 – Present)
- Mississippi Jr. College Softball Officials Association (1997 – 2017)
- Southern States Athletic Conference Softball (2014 – 2017)
- USA Softball (1989 – Present)

- USA Softball of Mississippi (1989 – Present)
- Community Connection, Inc (1998 – Present)
- The Ray E. Foundation/Juneteenth Celebration (1990 – Present)
- Pine Belt Boys and Girls (1997 – 2000)

Memberships/Certifications:

- Board of Directors
  - Community Connection, Inc (Treasurer) (2012 – Present)
  - Ray E. Foundation (2014 -Present)
  - Hattiesburg Sports Officials Association (Vice President) (2014 – Present)
- Advisory Board Member
  - National Intramural Recreational Sports Association Emerging Recreational Sports (2004 – 2013)
- Assigning Secretary
  - Hattiesburg Sports Officials Association (Slow/Fast Pitch Softball) (2009 – Present)
- Assistant Assigning Secretary
  - Hattiesburg Sports Officials Association (Football) (2015 – Present)
- Clinician/Trainer/Evaluator
  - Hattiesburg Sports Officials Association (Slow/Fast Pitch Softball) (1996 – Present)
  - USA Softball (2016 – Present)
  - USA Softball of Mississippi (1998 – Present)
  - Mississippi Jr. College Softball Officials Association (2012 – Present)
- National/Regional/Local Umpire Staff
  - USA Softball (2016 – Present)
  - USA Softball, Region 4 (MS, AL, LA, AR) 2016 – Present)
  - USA Softball of Mississippi (2004 – Present)

CONFERENCES AND WORKSHOPS:

- National Intramural Recreational Sports Association National Conference
- National Intramural Recreational Sports Association Emerging Recreational Sports Leaders
- National Intramural Recreational Sports Association Region II Conference
- National Intramural Recreational Sports Association Mississippi/Alabama Workshop
- National Intramural Recreational Sports Association Facility Symposium
- USA Softball National Biennial Umpire in Chief Clinic
- USA Softball Annual Council Meeting
- USA Softball National Umpire School
- USA Softball of Mississippi State Umpire School
- Mississippi School of Plant Management
- Hilliard's Cleaning Cost Analysis Program Train-The-Trainers
- Hilliard's Cleaning Management Symposium
- Team Cleaning Systems Training and Implementation
- Athletic Business
- Institute for African American Mobilization

HONORS AND ACCOMPLISHMENTS

- Southern Miss Recreational Sports Steve "Big Daddy" Rey Alumnus of the Year Award
- Southern Miss Recreational Sports, Sports Officials Association Alumnus of the year
- National Intramural Recreational Sports Association Horace Moody Award
- National Intramural Recreational Sports Association Herman Williams Outstanding Founders Service Award
- Mississippi High School Activity Association Sports Official of the year (2 slow pitch and 1 fast pitch)
- Mississippi High School Activity Association Championship Game (7 softball and 1 football)
- USA Softball "Border Battle IV" (umpire)
- USA Softball National Championships - Official (7 tournaments)
- USA Softball Association National Championship Tournament Umpire in Chief (7 tournaments)
- USA Softball Umpires Medals Program (Gold member)
- USA Softball Association Umpires National Indicator Fraternity
- USA Softball Association "Elite" Umpire
- Southern Miss Student Activities Heart of Empowerment Eagle Award

REFERENCES

Mark Crager
Director of Recreational Sports
The University of Southern Mississippi
118 College Drive #5155
Hattiesburg, MS 39406
(601) -266-5405
Mark.crager@usm.edu

Dr. Eddie Holloway
Assistant Vice President of Student Affairs/
Dean of Students
The University of Southern Mississippi
118 College Drive #5204
Hattiesburg, MS 39406
(601) – 266 – 6028
Eddie.holloway@usm.edu

Sid Gonsoulin
Former Associate Vice President of Student Affairs
The University of Southern Mississippi
118 College Drive #5067
Hattiesburg, MS 39406
(601) – 818 – 4121
Sidney.gonsoulin@usm.edu

Mike Giles
Former Director of Recreational Sports
The University of Southern Mississippi
118 College Drive #5155
Hattiesburg, MS 39406
(601) – 520-5806
Michael.giles@usm.edu

Jackie Moffett
Assistant Director of Campus Recreation
Eastern Michigan University
100 Olds-Robb
Ypsilanti, MI 48197
(734) – 487 - 3433
jmoffet1@emich.edu

There came on for consideration at a duly constituted meeting of the Mayor and Members of the City Council of the City of Hattiesburg, Mississippi, held on the 7th day of **August, 2018**, the following Resolution:

RESOLUTION 2018-106

APPOINTING DIRECTOR OF PARKS AND RECREATION DEPARTMENT FOR CITY OF HATTIESBURG

WHEREAS, Section 21-8-23 of the Mississippi Code of 1972, as annotated and amended, provides that a department director shall be appointed by the Mayor of the City of Hattiesburg, Mississippi, and confirmed by an affirmative vote of a majority of the City Council present and voting: and

WHEREAS, Chris McGee is appointed by the Mayor and is recognized by the Council as a qualified and proper person to fulfill the duties of the Director of Parks and Recreation Department.

NOW, THEREFORE, BE IT RESOLVED BY THE COUNCIL OF THE CITY OF HATTIESBURG:

Section 1. That Chris McGee be and is hereby confirmed to serve as Director of Parks and Recreation Department to fulfill the duties as defined by Section 21-8-23 of the Mississippi Code of 1972 as annotated and amended.

Section 2. That public interest and necessity requiring same, this Resolution shall become effective immediately.

The above and foregoing Resolution, after having been first reduced to writing, was introduced by Council Member George, seconded by Council Vice President Dryden, and was adopted by the following vote, to-wit:

YEAS:	NAYS:	ABSENT:
George	None	None
Delgado		
Carroll		
Dryden		
Brown		

The President thereby declared the motion carried and the Resolution adopted, this the 7th day of **August, 2018**.

(SEAL)

ATTEST:

CLERK OF COUNCIL

ADOPTED :

PRESIDENT OF COUNCIL

The above and foregoing Resolution having been submitted to and approved by the Mayor, this the 7th day of **August, 2018**.

ATTEST:

CITY CLERK

APPROVED:

MAYOR

City of Hattiesburg, MS

200 Forrest St.
P.O. Box 1898
Hattiesburg, MS 39401

Master

File Number: 2018-668

File ID:	2018-668	**Type:**	Regular Agenda Item	**Status:**	Agenda Ready
Version:	2	**Reference:**		**In Control:**	City Council
Requester:				**File Created:**	07/31/2018
Brief Title:	Approval of minutes for July 2, 3, 11, 16 & 17, 2018, meetings of the City Council			**Final Action:**	
				Minute Book Number:	MB 2018-190

Title:

Approval of minutes for July 2, 3, 11, 16 & 17, 2018, meetings of the City Council.

Notes:			
		Agenda Date:	08/07/2018
Indexes:		**Agenda Number:**	IV.-1
Sponsors:		**Enactment Date:**	
Attachments:	min 7-2-18 Unsafe PH, AR, WS, min 7-3-18, min 7-11-18 SC, min 7-16-18 AR, Budget Review HPD & Water-Sewer Dept., min 7-17-18	**Enactment Number:**	
Contact:		**Meeting Date:**	08/07/2018
Drafter:		**Effective Date:**	

History of Legislative File

Version:	Acting Body:	Date:	Action:	Sent To:	Due Date:	Return Date:	Result:
2	City Council	08/07/2018					

Text of Legislative File 2018-668

Title

Approval of minutes for July 2, 3, 11, 16 & 17, 2018, meetings of the City Council.

Summary

Expenditure Type

Purchasing Item

Publication Information

BE IT REMEMBERED that the Hattiesburg City Council held a Public Hearing on unsafe properties at 4:00 p.m. Monday, July 2, 2018, in Council Chambers at City Hall, pursuant to order adopted May 22, 2018, at Minute Book 2018 Page 131, to determine if the following properties are in such a state of uncleanliness so as to be a menace to the health and safety of the community.

Those present included Mayor Toby Barker and members of the City Council Jeffrey George, Ward 1; Deborah Delgado, Ward 2; Carter Carroll, Ward 3; Mary Dryden, Ward 4; and Nicholas Brown, Ward 5. Others in attendance included Chief Administrative Officer, Ann Jones; Director of Administration/City Clerk, Kermas Eaton; City Engineer, Lamar Rutland; Fire Chief, Sherrocko Stewart; Assistant Fire Chief, Danny Wade; Police Chief, Anthony Parker; Assistant Police Chief, Peggy Sealy; Deputy Director of Streets, Colton Hill; Deputy Deputy Director of Maintenance, Perry Thomas; Director of the Water Department, Alan Howe; Director of Parks and Recreation, Ronnie Perkins; Director of Urban Development, Andrew Ellard; Planning Administrator, Ginger Maddox; Code Enforcement Manager, Chris Price; City Attorney, Randy Pope; Customer Service Coordinator, Joe Paul; Chief Communications Officer, Samantha McCain; Deputy Clerk of Council, Lisa Luu; media; and the public.

Council President Carroll called the meeting to order and explained the procedures.

1. **2018-569** Hold Public Hearing on July 2, 2018 to determine if properties are in such state of uncleanliness so as to be a menace to the health and safety of the community.

Attachments: P.H. memo 7.3.18
Removal of case memo
1. 804 E. 6th St.
2. 1104 Franklin St
3. 315 Miller St.
4. 990 Hardy St.
5. 530 Buschman St.
6. 1326 Pine St.
7. 210 Rosa Ave
8. 325 Emerson Dr.
9. 607 Graymont Ave.
10. 3818 Eagle Dr.
11. 107 E 7th St
12. 705 Bouie St

Regarding Case #12 (705 Bouie Street), Roy Lee Price stated that he has been trying to work on maintaining the yard. Council President Carroll asked Code Enforcement Division Manager, Chris Price, when the pictures of the property were taken. Mr. Chris Price responded that the pictures were taken in the early spring. He said he had driven by the property a couple days ago and that the property still appeared to be in the same condition. Mr. Roy Lee Price said he was expecting help from a local pastor with the cleanup effort, and that he

expected to meet with Habitat for Humanity next Thursday to ask for additional help. Council President Carroll stated that the Council would continue to pursue the case, but encouraged Mr. Roy Lee Price to continue making progress to the property.

There were no other citizens present who wished to address the Council regarding properties listed for the public hearing.

By unanimous consent, Council President Carroll closed the public hearing at 4:08 p.m. and proceeded with the Agenda Review.

2018-625 Unsafe PH Sign-In Sheet, 7-2-18.

Attachments: 7-2-18 Unsafe PH Sign-In Sheet

The Deputy Clerk of Council read aloud amendments to the agenda as follows:

Postpone approval of the June 18 and 19, 2018, minutes until the July 17, 2018, Council meeting.

Add Policy Agenda Item VI.-9 at the request of the Administration as follows:

VI.-9 **2018-582** Adopt a resolution authorizing submittal of FY-2018 "Better Utilizing Investments to Leverage Development" (BUILD) Discretionary Grant Program Application to the U.S. Department of Transportation seeking funds to construct an alternate transportation route to relieve traffic congestion due to railroad delays in the Downtown Area; Application is requesting $22,000,000 of which 80% or $17,600,000 is Federal, and 20% or $4,400,000 is City.

Attachments: RES - BUILD Discretionary Grant

Add Routine Agenda Item VII.-10 at the request of the Administration as follows:

VII.-10 **2018-583** Acknowledge no bids were received at the bid opening June 28, 2018 for the Infrastructure Rehabilitation Arledge Street & Katie Avenue Area project (related to the Public Safety Complex Project); Authorize re-advertisement for bids for same project.

Attachments: Recommendation Letter for Re-advertisement
11258_Plans_Street Ready Set_Signed_2018-05-14
11258_Specs_Review Set_(Lamar)
ADVERTISEMENT FOR BIDS-readvertisement

Add Work Session Agenda Item 5 at the request of the Administration as follows:

5. House Bill 1114 - Municipality's Authority to Address Overgrown Lots - Mayor

And, Amend Work Session Agenda Item 3 to read as follows:

3. A Prevailing Wage Ordinance for Building/Construction Trades in the City of Hattiesburg - Delgado

Following discussion of agenda items, Council President Carroll closed the Agenda Review.

Council Vice President Dryden proceeded with the Citizens' Forum. She stated the procedures and invited members of the public to speak.

The following citizen addressed the Council: Joseph Rawson, 701 Dearborne Road.

There were no other citizens present who wished to address the Council.

Council Vice President Dryden closed the Citizen Forum.

2018-624 Citizens' Forum Sign-In Sheet, 7-2-18.

Attachments: 7-2-18 Citizens' Forum Sign-In Sheet

Council President Carroll proceeded with the Work Session, which included a discussion of decriminalization for the possession of 30 grams or less of marijuana; a discussion of the James Boykin Memorial Drive Hwy 42 Bypass; a discussion of the prevailing wage ordinance for the building and construction trades in the City of Hattiesburg; a discussion of grass cutting and cleaning of the ditches; and an overview of the House Bill 1114 - Municipality's Authority to Address Overgrown Lots.

Following the discussion, Council President Carroll closed the work session.

Council President Carroll called for additional business.

There was no additional business.

By unanimous consent, Council President Carroll declared the meeting closed at 4:42 p.m., this the 2nd day of July, A.D., 2018.

THIS PAGE LEFT BLANK INTENTIONALLY

BE IT REMEMBERED that the regular meeting of the Hattiesburg City Council was held at 5:00 p.m. Tuesday, July 3, 2018, in Council Chambers at City Hall.

Those present included Mayor Toby Barker and members of the City Council Jeffrey George, Ward 1; Deborah Delgado, Ward 2; Carter Carroll, Ward 3; Mary Dryden, Ward 4; and Nicholas Brown, Ward 5. Others in attendance included Chief Administrative Officer, Ann Jones; Director of Administration/City Clerk, Kermas Eaton; City Engineer, Lamar Rutland; Fire Chief, Sherrocko Stewart; Police Chief, Anthony Parker; Deputy Director of Streets, Colton Hill; Deputy Director of Sanitation Wanda Tyler; Deputy Director of Maintenance Perry Thomas; Director of the Water Department, Alan Howe; Director of Parks and Recreation, Ronnie Perkins; Director of Urban Development, Andrew Ellard; Code Enforcement Manager, Chris Price; City Attorney, Randy Pope; Chief Communications Officer, Samantha McCain; Deputy Clerk of Council, Lisa Luu; media; and the public.

Council President Carroll called the meeting to order.

The prayer was given by Pastor Robert L. Herron Jr. of New Fellowship Baptist Church.

The Pledge of Allegiance was led by Chief Parker.

THE MATTER OF THE AGENDA ORDER came before the Council.

A MOTION was made by Council member Delgado and seconded by Council member George to Add Policy Agenda Item VI.-10 at the request of the Administration as follows:

VI.-10 2018-585 Approve engagement letter from Gladden Law Office, PLLC to represent the City of Hattiesburg in the case of (Utpal N. Patel and Manisha, Inc v. City of Hattiesburg) providing legal services in defending the appeal of a recent zoning decision made regarding a property located at North 38th Avenue.

Attachments: Gladden Letter of Engagement

Add Routine Agenda Items VII.-11 and VII.-12 at the request of the Administration as follows:

VII.-11 2018-588 Authorize and Approve publication of Notice of Public Comment and review on the Draft Local on FY 2019-2022 Hattiesburg-Petal-Forrest-Lamar Metropolitan Planning Organization Transportation Improvement Plan (TIP) and establishing a public comment period beginning July 12, 2018 and ending on August 30, 2018.

Attachments: NOTICE FOR PUBLIC COMMENT - HPFL-MPO FY 2019-2022 TIP

VII.-12 2018-589 Approve the issuance of vehicle for hire permit/badge to Quincy Mashard Chapman, to drive for Loyal Limousines, Inc.

Attachments: Permit

There being no discussion, the Motion received the affirmative vote of the Council as follows:

Yeas: 5 - George, Delgado, Carroll, Dryden and Brown

Nays: 0

A MOTION was made by Council member George and seconded by Council Vice President Dryden to approve the minutes of the June 4, 5, 7 and 12, 2018, City Council meetings.

There being no discussion, the Motion received the affirmative vote of the Council as follows:

Yeas: 4 - George, Carroll, Dryden and Brown

Nays: 0

Abstain: 1 - Delgado

THE PRESENTATION AGENDA came before the Council.

There were no presentations at this time.

THE POLICY AGENDA came before the Council.

VI.-1 **2018-570** Adopt Resolutions on July 3, 2018 condemning such properties as uncleanliness and a menace to the health and safety of the community.

Attachments: P.H. resolution adoption 7.3.18
1. 804 E 6th_resolution
2. 1104 Franklin ST_resolution
3. 315 Miller St_resolution
4. 990 Hardy st_resolution
5. 530 Buschman_resolution
6. 1326 Pine st_resolution
7. 210 Rosa Ave_resolution
8. 325 Emerson Dr_resolution
9. 607 Graymont Ave_resolution
11. 107 E. 7th St._resolution
12. 705 Bouie St_resolution

A MOTION was made by Council Vice President Dryden and seconded by Council Member George to Adopt Resolutions on July 3, 2018 condemning such properties as uncleanliness and a menace to the health and safety of the community.

There being no discussion, the Motion received the affirmative vote of the Council as follows:

Yeas: 5 - George, Delgado, Carroll, Dryden and Brown

Nays: 0

VI.-2 **2018-561** Adopt a Resolution changing the time of the August 7, 2018, City Council meeting to 4p.m to allow city officials to participate in the City of Hattiesburg's National Night Out Against Crime activities.

Attachments: Time Change Resolution-8-7-2018

A MOTION was made by Council Vice President Dryden and seconded by Council Member George to Adopt a Resolution changing the time of the August 7, 2018, City Council meeting to 4p.m to allow city officials to participate in the City of Hattiesburg's National Night Out Against Crime activities.

There being no discussion, the Motion received the affirmative vote of the Council as follows:

Yeas: 5 - George, Delgado, Carroll, Dryden and Brown

Nays: 0

VI.-3 **2018-557** Adopt an order to approve the sale of a personal service weapon to retiring Assistant Chief of Police Eugene Frank Misenhelter pursuant to Mississippi Code Annotated 45-9-131

Attachments: Purchase of Service Weapon - Asst. Chief Misenhelter

A MOTION was made by Council Member George and seconded by Council Member Delgado to Adopt

an order to approve the sale of a personal service weapon to retiring Assistant Chief of Police Eugene Frank Misenhelter pursuant to Mississippi Code Annotated 45-9-131

There being no discussion, the Motion received the affirmative vote of the Council as follows:

Yeas: 5 - George, Delgado, Carroll, Dryden and Brown

Nays: 0

VI.-4 **2018-576** Authorize Mayor to execute in duplicate Contract for Professional Services with 4D Solutions, Inc. to expedite completion of Project Worksheets associated with DR 4101 (2013 Tornado Event).

Attachments: HATTIESBURG4DPROfSVCV3 6-12-18

A MOTION was made by Council Member George and seconded by Council Member Brown to Authorize Mayor to execute in duplicate Contract for Professional Services with 4D Solutions, Inc. to expedite completion of Project Worksheets associated with DR 4101 (2013 Tornado Event).

There being no discussion, the Motion received the affirmative vote of the Council as follows:

Yeas: 5 - George, Delgado, Carroll, Dryden and Brown

Nays: 0

VI.-5 **2018-563** Authorize Mayor to execute Memorandum of Agreement between the City of Hattiesburg and Pearl River Community College to train existing city employees in CDL training to earn a class *A* certification in commercial truck driving, at no cost to the city.

Attachments: MOA-PRCC

A MOTION was made by Council Vice President Dryden and seconded by Council Member George to Authorize Mayor to execute Memorandum of Agreement between the City of Hattiesburg and Pearl River Community College to train existing city employees in CDL training to earn a class *A* certification in commercial truck driving, at no cost to the city.

There being no discussion, the Motion received the affirmative vote of the Council as follows:

Yeas: 5 - George, Delgado, Carroll, Dryden and Brown

Nays: 0

VI.-6 **2018-566** Approve and authorize Mayor to execute Amendment No.1 to the agreement with Tyler Technologies, Inc. for the upgrade of EnerGov software used by the Department of Urban Development.

Attachments: Supplemental Agreement No 1 Energov Software Upgrade Project

A MOTION was made by Council Member George and seconded by Council Vice President Dryden to Approve and authorize Mayor to execute Amendment No.1 to the agreement with Tyler Technologies, Inc. for the upgrade of EnerGov software used by the Department of Urban Development.

There being no discussion, the Motion received the affirmative vote of the Council as follows:

Yeas: 5 - George, Delgado, Carroll, Dryden and Brown

Nays: 0

VI.-7 2018-562 Approve an amendment to the Developer Agreement with Breakthrough Community Services, Inc. (found at MB2017-519) to extend the term of the agreement to July 3, 2019; allowing for the completion of a Rental Rehabilitation activity located at 709 Highland Avenue and authorize the Mayor to execute in triplicate for same. {Entitlement HOME}

Attachments: Letter from Breakthrough Requesting Agreement Extension.pdf
Breakthrough Agreement Amendment.pdf

A MOTION was made by Council Member George and seconded by Council Vice President Dryden to Approve an amendment to the Developer Agreement with Breakthrough Community Services, Inc. (found at MB2017-519) to extend the term of the agreement to July 3, 2019; allowing for the completion of a Rental Rehabilitation activity located at 709 Highland Avenue and authorize the Mayor to execute in triplicate for same. {Entitlement HOME}

There being no discussion, the Motion received the affirmative vote of the Council as follows:

Yeas: 5 - George, Delgado, Carroll, Dryden and Brown

Nays: 0

VI.-8 2018-577 Rescind Contractor and Owner Agreement and a Housing Rehabilitation Grant Award to Bettye Hill of 413 South 13th Avenue, (File ID: 2018-168, MB2018-29) approved on February 6, 2018 {Entitlement}.

Attachments: Rescind - Contract and Grant Agreement 06.22.18

A MOTION was made by Council Vice President Dryden and seconded by Council Member George to Rescind Contractor and Owner Agreement and a Housing Rehabilitation Grant Award to Bettye Hill of 413 South 13th Avenue, (File ID: 2018-168, MB2018-29) approved on February 6, 2018. {Entitlement}

There being no discussion, the Motion received the affirmative vote of the Council as follows:

Yeas: 5 - George, Delgado, Carroll, Dryden and Brown

Nays: 0

VI.-9 2018-582 Adopt a resolution authorizing submittal of FY-2018 "Better Utilizing Investments to Leverage Development" (BUILD) Discretionary Grant Program Application to the U.S. Department of Transportation seeking funds to construct an alternate transportation route to relieve traffic congestion due to railroad delays in the Downtown Area; Application is requesting $22,000,000 of which 80% or $17,600,000 is Federal, and 20% or $4,400,000 is City.

Attachments: RES - BUILD Discretionary Grant

A MOTION was made by Council Vice President Dryden and seconded by Council Member Delgado to Adopt a resolution authorizing submittal of FY-2018 "Better Utilizing Investments to Leverage Development" (BUILD) Discretionary Grant Program Application to the U.S. Department of Transportation seeking funds to construct an alternate transportation route to relieve traffic congestion due to railroad delays in the Downtown Area; Application is requesting $22,000,000 of which 80% or $17,600,000 is Federal, and 20% or $4,400,000 is City.

There being no discussion, the Motion received the affirmative vote of the Council as follows:

Yeas: 5 - George, Delgado, Carroll, Dryden and Brown

Nays: 0

VI.-10 2018-585 Approve engagement letter from Gladden Law Office, PLLC to represent the City of Hattiesburg in the case of (Utpal N. Patel and Manisha, Inc v. City of Hattiesburg) providing legal services in defending the appeal of a recent zoning decision made regarding a property located at North 38th Avenue.

Attachments: Gladden Letter of Engagement

A MOTION was made by Council Vice President Dryden and seconded by Council Member George to Approve engagement letter from Gladden Law Office, PLLC to represent the City of Hattiesburg in the case of (Utpal N. Patel and Manisha, Inc v. City of Hattiesburg) providing legal services in defending the appeal of a recent zoning decision made regarding a property located at North 38th Avenue.

There being no discussion, the Motion received the affirmative vote of the Council as follows:

Yeas: 3 - George, Carroll and Dryden

Nays: 0

Abstain: 2 - Delgado and Brown

THE ROUTINE AGENDA came before the Council.

A MOTION was made by Council member George and seconded by Council member Delgado to approve the Routine Agenda.

Following discussion, the Motion received the affirmative vote of the Council as follows:

Yeas: 5 - George, Delgado, Carroll, Dryden and Brown

Nays: 0

VII.-1 2018-568 Acknowledge receipt of unadvertised bid purchase docket report for period of March 1, 2018, through June 20, 2018 as provided for in Section 31-7-13 (b) of the Mississippi Code of 1972.

Attachments: 07-03-UAB Docket

VII.-2 2018-559 Acknowledge receipt of unadvertised bids for City Hall 3rd Floor Renovation; Acknowledge the bid of Hub City Construction in the amount of $49,180.00 as the lowest bid received. (Unadvertised bids for Construction Project)

Attachments: 07-03-City Hall 3rd Floor Renovation-Hub City Construction (Two Quote)

VII.-3 2018-567 Acknowledge bids received June 14, 2018 for the Bobby L. Chain Airport Taxiway Extension Part 2 Project and accept the bid from Warren Paving Inc. in the amount of $783,331.00 as the lowest and best bid; Authorize Mayor to execute contracts upon preparation.

Attachments: Certified Bid Tab
Award Recomendation-City council Warren Paving
Hattiesburg Taxiway A Extension Part 2 - Spec Book
Hattiesburg Taxiway A Extension Part 2 Plans - Revised
Hattiesburg Taxiway A Extension Part 2 - Contract

VII.-4 2018-573 Acknowledge receipt of a permanent Right-of-Way Easement for a portion of Tax Parcel No. 2-028L-07-018.00 (PPIN 23108), a permanent Right-of-Way Easement for a portion of Tax Parcel No. 2-028L-07-147.00 (PPIN 23169), and a Temporary Construction Easement for a portion of Tax Parcels 2-028L-07-148.00 (PPIN 23218), 2-028L-07-149.00 (PPIN 23219), and 2-028L-07-152.00 (PPIN 23217), all from the University of Southern Mississippi for the 38th Avenue Pathway Project; Authorize City Clerk to record permanent easements with the county.

Attachments: Signed Easements - 38th Avenue.SOS

VII.-5 2018-574 Acknowledge receipt of signed and notarized permanent easements for a portion of Lamar County Parcels as detailed below for the COMSWIP Sewer Phase V project; Authorize payment to property owners for established values as noted below.

Value	Lamar County Parcel No.
$1,800.00	052A-03-004.045
$6,000.00	052A-03-004.046
$1,800.00	052A-03-004.047
$1,200.00	052A-03-004.048
$1,800.00	052A-03-004.049
$2,550.00	052A-03-004.050

Attachments: Signed Perm Easement.Weill.1
Signed Easement.Bevard.1
Signed Easement.Hester.1
Signed Easement.Regina Lee.1
Signed Easement.Eye.1
Signed Permanent Easement.Rutland.1

VII.-6 2018-572 Approve plans and specifications for the Reconstruction of N. 31st Avenue and Alley Project (No. DECD-0018 (34) BO); Authorize Advertisement for bids for same.

Attachments: SECTION 900 31ST AVE - Advertisement
Specs Complete
FINAL SETW STANDARDS.pdf

VII.-7 2018-565 Approve and authorize issuance of manual check for CDBG Program Claim per attached memorandum. {Entitlement CDBG}

Attachments: CDBG Program Claim July 3, 2018.pdf

VII.-8 2018-575 Approve the sale of grave spaces, per attached Receipts, Memo's and Deeds.

Attachments: Receipts (07-03-18)
Memo's (07-03-18)
Deeds (07-03-18)

VII.-9 2018-564 Approve claims docket for the period ending June 30, 2018

Attachments: DOCKET 18.06-30

VII.-10 2018-583 Acknowledge no bids were received at the bid opening June 28, 2018 for the Infrastructure Rehabilitation Arledge Street & Katie Avenue Area project (related to the Public Safety Complex Project); Authorize re-advertisement for bids for same project.

Attachments: Recommendation Letter for Re-advertisement
11258_Plans_Street Ready Set_Signed_2018-05-14
11258_Specs_Review Set_(Lamar)
ADVERTISEMENT FOR BIDS-readvertisement

VII.-11 2018-588 Authorize and Approve publication of Notice of Public Comment and review on the Draft Local on FY 2019-2022 Hattiesburg-Petal-Forrest-Lamar Metropolitan Planning Organization Transportation Improvement Plan(TIP) and establishing a public comment period beginning July 12, 2018 and ending on August 30, 2018.

Attachments: NOTICE FOR PUBLIC COMMENT - HPFL-MPO FY 2019-2022 TIP

VII.-12 2018-589 Approve the issuance of vehicle for hire permit/badge to Quincy Mashard Chapman, to drive for Loyal Limousines,Inc.

Attachments: Permit

By unanimous consent, Council President Carroll declared the meeting recessed at 5:11 p.m., this the 3rd day of July, A.D. , 2018.

BE IT REMEMBERED that the regular meeting of the Hattiesburg City Council was held at 5:15 p.m. Wednesday, July 11, 2018, in Council Chambers at City Hall.

Those present included Mayor Toby Barker and members of the City Council Jeffrey George, Ward 1 (Teleconference); Deborah Delgado, Ward 2; Carter Carroll, Ward 3; Mary Dryden, Ward 4; and Nicholas Brown, Ward 5. Others in attendance included Chief Administrative Officer, Ann Jones; Director of Administration/City Clerk, Kermas Eaton; Interim Chief Financial Officer, Connie Everett; City Engineer, Lamar Rutland; Fire Chief, Sherrocko Stewart; Director of Parks and Recreation, Ronnie Perkins; Director of Urban Development, Andrew Ellard; Chief Communications Officer, Samantha McCain; Clerk of Council, Ronda S. Cole; Deputy Clerk of Council, Lisa Luu; media; and the public.

Council President Carroll Called the meeting to order.

1. **2018-615** Acknowledge receipt of the Audited Financial Statements of the City of Hattiesburg for the fiscal year ending September 30, 2016, from Topp McWhorter Harvey PLLC (On file in the City Clerk's Office).

Attachments: Council Communication Letter FY 2016
Communication of findings FY 2016
City of Hattiesburg Audit Report FYE 9-30-2016

A MOTION was made by Council Vice President Dryden and seconded by Council Member Delgado to Acknowledge receipt of the Audited Financial Statements of the City of Hattiesburg for the fiscal year ending September 30, 2016, from Topp McWhorter Harvey PLLC (On file in the City Clerk's Office).

Paige Johnson and Joe Townsend of Topp McWhorter Harvey,PLLC appeared before the Council to provide an overview of the 2016 Audit.

Following discussion, the Motion received the affirmative vote of the Council as follows:

Yeas: 5 - George, Delgado, Carroll, Dryden and Brown

Nays: 0

2. **2018-614** Authorize Council President to execute duplicate contract with Topp McWhorter Harvey PLLC to audit the financial statements of the City of Hattiesburg for the fiscal year ended September 30, 2017.

Attachments: Audit Engagement Letter FY 2017

A MOTION was made by Council Vice President Dryden and seconded by Council Member Delgado to Authorize Council President to execute duplicate contract with Topp McWhorter Harvey PLLC to audit the financial statements of the City of Hattiesburg for the fiscal year ended September 30, 2017.

There being no discussion, the Motion received the affirmative vote of the Council as follows:

Yeas: 5 - George, Delgado, Carroll, Dryden and Brown

Nays: 0

3. **2018-617** Authorize Jackson, Tullos & Rogers, PLLC, to file Eminent Domain on behalf of the City of Hattiesburg to acquire property located off William Carey Parkway, Parcel#2-038K-21-009.00, PPIN 27403, for public purpose.

Attachments: 2018-07-09 engagement letter

A MOTION was made by Council Vice President Dryden and seconded by Council Member Brown to Authorize Jackson, Tullos & Rogers, PLLC, to file Eminent Domain on behalf of the City of Hattiesburg to acquire property located off William Carey Parkway, PArcel#2-038K-21-009.00, PPIN 27403, for public purpose.

There being no discussion, the Motion received the affirmative vote of the Council as follows:

Yeas: 5 - George, Delgado, Carroll, Dryden and Brown

Nays: 0

4. **2018-616** Designate "Laughs 4 Life", to be held August 1, 2018, Downtown Hattiesburg as a city-approved event for the purposes described in Ordinance Number 3148.

Attachments: Laughs 4 Life- Application
Ordinance 3148

A MOTION was made by Council President Dryden and seconded by Council Member Brown to Designate "Laughs 4 Life", to be held August 1, 2018, Downtown Hattiesburg as a city-approved event for the purposes described in Ordinance Number 3148.

There being no discussion, the Motion received the affirmative vote of the Council as follows:

Yeas: 5 - George, Delgado, Carroll, Dryden and Brown

Nays: 0

5. **2018-599** Authorize the acceptance of the FY17 Edward Byrne Justice Assistance Grant (JAG) Program Award from the US Department of Justice in the amount of $18,795 and authorize the Mayor to execute the same.

Attachments: 2017 Byrne Grant Award

A MOTION was made by Council Vice Dryden and seconded by Council Member Delgado to Authorize the acceptance of the FY17 Edward Byrne Justice Assistance Grant (JAG) Program Award from the US Department of Justice in the amount of $18,795 and authorize the Mayor to execute the same.

There being no discussion, the Motion received the affirmative vote of the Council as follows:

Yeas: 5 - George, Delgado, Carroll, Dryden and Brown

Nays: 0

By unanimous consent, Council President Carroll declared the meeting recessed at 5:30 p.m., this the 11th day of July, A.D. , 2018.

BE IT REMEMBERED that the regular meeting of the Hattiesburg City Council was held at 4:00 p.m. Monday, July 16, 2018, in Council Chambers at City Hall.

Those present included Mayor Toby Barker and members of the City Council Jeffrey George, Ward 1; Deborah Delgado, Ward 2; Carter Carroll, Ward 3; Mary Dryden, Ward 4; and Nicholas Brown, Ward 5. Others in attendance included Chief Administrative Officer, Ann Jones; Director of Administration/City Clerk, Kermas Eaton; Police Chief, Anthony Parker; Assistant Police Chief, Peggy Sealy; Deputy Director of Streets, Colton Hill; Deputy Director of Sanitation, Wanda Tyler; Deputy Director of Maintenance, Perry Thomas; Director of the Water Department, Alan Howe; Director of Urban Development, Andrew Ellard; Planning Administrator, Ginger Maddox; Code Enforcement Manager, Chris Price; Municipal Court Judge, Wes Curry; City Attorney, Randy Pope; Customer Service Coordinator, Joe Paul; Chief Communications Officer, Samantha McCain; Clerk of Council, Ronda S. Cole; Deputy Clerk of Council, Lisa Luu; media; and the public.

Council President Carroll Called the meeting to order.

The Clerk of Council read aloud amendments to the agenda as follows:

Add Policy Agenda Items VI.-16 through VI.-19, at the request of the Administration as follows:

VI.-16 2018-633 Approve or Deny changes to wages and salaries in the Hattiesburg Police Department, Dispatch Division, in accordance with Ordinance 3154.

Attachments: Copy of Evidence Position Salary Adjustment 07.16.18-Edit 2

VI.-17 2018-634 Authorize Mayor to execute an agreement between the City of Hattiesburg and the University of Southern Mississippi, entering into a pilot program to offer full-time employees with an opportunity to complete their undergraduate education.

Attachments: USM Agreement w/COH for Employee Education

VI.-18 2018-632 Authorize Director of Engineering, Lamar Rutland, to make application to MDOT-FAA for 100% Reimbursable Supplementary Discretionary Funding in the amount of $1,000,000 for a Ramp Rehabilitation project.

Attachments: FW_ $1B Supplemental Discretionary Funding Requests
Supplemental Guidance
Federal Register Notice 2018-14675

VI.-19 2018-329 Acknowledge receipt of request filed by Jeff Sims and Ashley Robinson, Owners, to appeal the Planning Commission's recommendation for the petition filed by Ashley Robinson, Owner, and Jeff Sims, Owner to establish the zoning classification for certain properties (see attached memo for property parcels) located in the Mandalay Villas at Greystone subdivision at the intersection of J. Ed Turner Drive and Topanga Trail in Ward 1 to Section 4.5.4, R-1B (Single-Family Residential) District; (Hattiesburg Planning Commission recommended to Deny on March 7, 2018); Set a public hearing before City Council on April 16, 2018, at 4:00 p.m. and authorize publication of Public Notice setting an Appeal Public Hearing.

Attachments: Appeal - Mandalay Villas R-1B Zoning denial
Public Notice - Appeal hearing - Mandalayy Villas Zoning R-1B
Parcels - Mandalay Villas at Greystone

Following discussion of agenda items, Council President Carroll proceeded with the Budget Review presentations from the Police Department and Water & Sewer Department.

Following the Budget Review Presentations, Council Vice President Dryden proceeded with the Citizens' Forum. She stated the procedures and invited members of the public to speak.

The following citizens addressed the Council:

- Benjamin Jones, Huntsville, AL
- Wanda Ward, 208 Gordon St.
- Beverly Shaw, 814 Martin Luther King Ave.
- Robert Abrams, 2613 Sunset Dr.
- Glenda Funchess, 306 Tuscan Ave.
- Fred Goins, 928 Monroe Rd.

There were no other citizens present who wished to address the Council.

Council Vice President Dryden closed the Citizen Forum.

2018-641 Citizens' Forum Sign-In Sheet, 7-16-18.

Attachments: 7-16-18 Citizens' Forum Sign-In Sheet

By unanimous consent, Council President Carroll declared the meeting closed at 5:58 p.m., this the 16th day of July, A.D., 2018.

BE IT REMEMBERED that the regular meeting of the Hattiesburg City Council was held at 5:00 p.m. Tuesday, July 17, 2018, in Council Chambers at City Hall.

Those present included Mayor Toby Barker and members of the City Council Jeffrey George, Ward 1; Deborah Delgado, Ward 2; Carter Carroll, Ward 3; Mary Dryden, Ward 4; and Nicholas Brown, Ward 5. Others in attendance included Chief Administrative Officer, Ann Jones; Director of Administration/City Clerk, Kermas Eaton; Police Chief, Anthony Parker; Deputy Director of Streets, Colton Hill; Deputy Director of Sanitation Wanda Tyler; Deputy Director of Maintenance Perry Thomas; Director of the Water Department, Alan Howe; Director of Parks and Recreation, Ronnie Perkins; Director of Urban Development, Andrew Ellard; Code Enforcement Manager, Chris Price; City Attorney, Randy Pope; Chief Communications Officer, Samantha McCain; Clerk of Council, Ronda Cole; Deputy Clerk of Council, Lisa Luu; media; and the public.

Council President Carroll called the meeting to order.

The prayer was given by Elder Fred Goins of Ephesus Seventh-day Adventist Church.

The Pledge of Allegiance was led by Chief Parker.

THE MATTER OF THE AGENDA ORDER came before the Council.

A MOTION was made by Council member George and seconded by Council Vice President Dryden to Add Addendum to the claims docket, Routine Agenda Item as follows:

VII-13 2018-628 Addendum to the claims docket, invoice payable to the United States Treasury, in the amount of $2,067.90:

Attachments: Addendum (addition) to the docket of claims

There being no discussion, the Motion received the affirmative vote of the Council as follows:

Yeas: 5 - George, Delgado, Carroll, Dryden and Brown

Nays: 0

A MOTION was made by Council Vice President Dryden and seconded by Council member George to approve the minutes of the June 18 and 19, 2018, City Council meetings.

There being no discussion, the Motion received the affirmative vote of the Council as follows:

Yeas: 4 - George, Carroll, Dryden and Brown

Nays: 0

Abstain: 1 - Delgado

THE PRESENTATION AGENDA came before the Council.

There were no presentations at this time.

THE POLICY AGENDA came before the Council.

VI.-1 2018-603 Adopt an Ordinance for the petition filed by Paul H. Williams, Owner, Richard E. Braswell, Owner, to change the zoning classification for 301 Gordon Street (Parcel 2-029H-03-371.00, PPIN 22168, Ward 2) from Section 4.5.7, R-3 (Multi-Family Residential) District to Section 4.5.10, B-3 (Community Business) District. The Planning Commission recommended to APPROVE on July 5, 2018.

Attachments: July HPC Minutes DRAFT
301 Gordon St - Zoning change - Planning Report
Ordinance - 301 Gordon St

A MOTION was made by Council Member Delgado and seconded by Council Vice President Dryden to table an Ordinance for the petition filed by Paul H. Williams, Owner, Richard E. Braswell, Owner, to change the zoning classification for 301 Gordon Street (Parcel 2-029H-03-371.00, PPIN 22168, Ward 2) from Section 4.5.7, R-3 (Multi-Family Residential) District to Section 4.5.10, B-3 (Community Business) District.

Following discussion, the Motion received the affirmative vote of the Council as follows:

Yeas: 5 - George, Delgado, Carroll, Dryden and Brown

Nays: 0

VI.-2 2018-604 APPROVE or DENY a petition filed by Dan Adams, Applicant, to request a permit for a replacement "Digital Billboard" as provided in Section 10.13.6 and all applicable regulations for 4649 Hardy Street (Parcel 051Q-12-002.000, PPIN 21452, Ward 3). The Planning Commission recommended to APPROVE on July 5, 2018.

Attachments: July HPC Minutes DRAFT
4649 Hardy St - Digital Billboard - Planning Report

A MOTION was made by Council member George and seconded by Council member Delgado to APPROVE a petition filed by Dan Adams, Applicant, to request a permit for a replacement "Digital Billboard" as provided in Section 10.13.6 and all applicable regulations for 4649 Hardy Street (Parcel 051Q-12-002.000, PPIN 21452, Ward 3).

There being no discussion, the Motion received the affirmative vote of the Council as follows:

Yeas: 5 - George, Delgado, Carroll, Dryden and Brown

Nays: 0

VI.-3 2018-602 Adopt an Ordinance for the petition filed by The City of Hattiesburg to amend the Land Development Code Section 10, Signs, including only the previously tabled amendments presented at the June Hattiesburg Planning Commission Public Hearing. The Planning Commission recommended to Approve on July 5, 2018.

Attachments: July HPC Minutes DRAFT
Ord. Sec. 10 - Amendment 7-17-18
Memo - LDC Amendment - Digital Billboard Late Addition - 6-5-2018
Memo - Sec. 10 - Additional changes GML 6-1-18

A MOTION was made by Council Vice President Dryden and seconded by Council Member George to Adopt an Ordinance (#3235) for the petition filed by The City of Hattiesburg to amend the Land Development Code Section 10, Signs, including only the previously tabled amendments presented at the June Hattiesburg

Planning Commission Public Hearing.

There being no discussion, the Motion received the affirmative vote of the Council as follows:

Yeas: 4 - George, Carroll, Dryden and Brown

Nays: 0

Abstain: 1 - Delgado

VI.-4 2018-611 Adopt an ordinance regulating work in, along, or across the right-of-way of the City of Hattiesburg and establishing standards and policies for small cell wireless facilities in the right-of-way.

Attachments: ROW and Small Cell - 7-2018

A MOTION was made by Council member George and seconded by Council Vice President Dryden to Adopt an ordinance (#3236) regulating work in, along, or across the right-of-way of the City of Hattiesburg and establishing standards and policies for small cell wireless facilities in the right-of-way.

There being no discussion, the Motion received the affirmative vote of the Council as follows:

Yeas: 5 - George, Delgado, Carroll, Dryden and Brown

Nays: 0

VI.-5 2018-600 Adopt an Ordinance amending Section 16-75 (9-B) and Exhibit (A) of the Municipal Code of Ordinances of the City of Hattiesburg last amended by Ordinance Number 2714, adopted February 8, 2000; in order to incorporate legislative changes (House Bill 1114) to Mississippi Code section 21-19-11 into the local ordinances for the City of Hattiesburg.

Attachments: Ordinance amending 16-17 paragraph B-9-of the Code of ordinances.

A MOTION was made by Council Vice President Dryden and seconded by Council member Brown to Adopt an Ordinance (#3237) amending Section 16-75 (9-B) and Exhibit (A) of the Municipal Code of Ordinances of the City of Hattiesburg last amended by Ordinance Number 2714, adopted February 8, 2000; in order to incorporate legislative changes (House Bill 1114) to Mississippi Code section 21-19-11 into the local ordinances for the City of Hattiesburg.

There being no discussion, the Motion received the affirmative vote of the Council as follows:

Yeas: 5 - George, Delgado, Carroll, Dryden and Brown

Nays: 0

VI.-6 2018-592 Adopt a resolution to set a Public Hearing before City Council at 4 p.m. on Monday August 20, 2018 to determine if certain properties are in such a state of uncleanliness so as to be a menace to the health and safety of the community and providing for notice to owners and authorize a publication of the notice hearing.

Attachments: Set P.H. 7.17.18
P.H, resolution 7.17.18

A MOTION was made by Council Vice President Dryden and seconded by Council member George to Adopt a resolution to set a Public Hearing before City Council at 4 p.m. on Monday August 20, 2018 to determine if certain properties are in such a state of uncleanliness so as to be a menace to the health and safety of the community and providing for notice to owners and authorize a publication of the notice hearing.

There being no discussion, the Motion received the affirmative vote of the Council as follows:

Yeas: 5 - George, Delgado, Carroll, Dryden and Brown

Nays: 0

VI.-7 2018-605 Adopt a resolution authorizing certain employees to determine whether properties or parcels constitute a menace to the public health, safety, and welfare of the community pursuant to Section 21-19-11 of the Mississippi Code.

Attachments: Resolution - Authorizing Staff for Expedited Code Enforcement

A MOTION was made by Council Vice President Dryden and seconded by Council Member George to Adopt a resolution authorizing certain employees to determine whether properties or parcels constitute a menace to the public health, safety, and welfare of the community pursuant to Section 21-19-11 of the Mississippi Code.

There being no discussion, the Motion received the affirmative vote of the Council as follows:

Yeas: 5 - George, Delgado, Carroll, Dryden and Brown

Nays: 0

VI.-8 2018-613 Adopt a Resolution re-appointing Randy Pope as City Attorney for the City of Hattiesburg for a term beginning August 1, 2018 and continuing to July 31,2019 in accordance to MS Code 21-15-25.

Attachments: Pope letter of engagement.
Reso-Randy Pope

A MOTION was made by Council Vice President Dryden and seconded by Council member Brown to Adopt a Resolution re-appointing Randy Pope as City Attorney for the City of Hattiesburg for a term beginning August 1, 2018 and continuing to July 31,2019 in accordance to MS Code 21-15-25.

There being no discussion, the Motion received the affirmative vote of the Council as follows:

Yeas: 5 - George, Delgado, Carroll, Dryden and Brown

Nays: 0

VI.-9 2018-581 Adopt a Resolution naming the Administrative Office Suite at the Hattiesburg Train Depot in Honor of Charles Patrick Harrington, honoring all the dedicated railroad men and women in Hattiesburg's history.

Attachments: Resolution-Harrington

A MOTION was made by Council Vice President Dryden and seconded by Council member George to Adopt a Resolution naming the Administrative Office Suite at the Hattiesburg Train Depot in Honor of Charles Patrick Harrington, honoring all the dedicated railroad men and women in Hattiesburg's history.

There being no discussion, the Motion received the affirmative vote of the Council as follows:

Yeas: 5 - George, Delgado, Carroll, Dryden and Brown

Nays: 0

VI.-10 2018-606 Adopt a Resolution authorizing Requisition No. 23 from the Project Fund Construction Account in connection with a certain loan agreement dated August 18, 2016, by and between the Mississippi Development Bank and the City of Hattiesburg.

Attachments: 2016 Bond Resolution No. 23

A MOTION was made by Council member George and seconded by Council member Brown to Adopt a Resolution authorizing Requisition No. 23 from the Project Fund Construction Account in connection with a certain loan agreement dated August 18, 2016, by and between the Mississippi Development Bank and the City of Hattiesburg.

There being no discussion, the Motion received the affirmative vote of the Council as follows:

Yeas: 5 - George, Delgado, Carroll, Dryden and Brown

Nays: 0

VI.-11 2018-598 Authorize Mayor to execute Facility Use Agreement between the City of Hattiesburg and the American Red Cross, for use of the Bobby L. Chain Municipal Airport as a disaster storage facility.

Attachments: Facility Use of Bobby L. Chain Municipal Airport Agreemetn Between COH and American Red Cross

A MOTION was made by Council Member Brown and seconded by Council Vice President Dryden to Authorize Mayor to execute Facility Use Agreement between the City of Hattiesburg and the American Red Cross, for use of the Bobby L. Chain Municipal Airport as a disaster storage facility.

There being no discussion, the Motion received the affirmative vote of the Council as follows:

Yeas: 5 - George, Delgado, Carroll, Dryden and Brown

Nays: 0

VI.-12 2018-578 Authorize the Mayor to execute Change Order No 1 in an additional amount of $24,028 associated with the Hub City Transit Facility Construction Project.

Attachments: HCT Facility - Change Order No 1

A MOTION was made by Council member George and seconded by Council member Brown to Authorize the Mayor to execute Change Order No 1 in an additional amount of $24,028 associated with the Hub City Transit Facility Construction Project.

There being no discussion, the Motion received the affirmative vote of the Council as follows:

Yeas: 5 - George, Delgado, Carroll, Dryden and Brown

Nays: 0

VI.-13 2018-586 Approve and authorize Mayor to execute in triplicate a Contractor and Owner Agreement and a Housing Rehabilitation Grant Award to Earnestine White of 208 Willis Avenue in an amount not to exceed $50,000 according to the Housing Rehabilitation and Housing Programs Manual Section VII (E). {Entitlement}

Attachments: Contract and Grant Agreement - 208 Willis Avenue 07.03.18 - 2

A MOTION was made by Council member Brown and seconded by Council member George to Approve and authorize Mayor to execute in triplicate a Contractor and Owner Agreement and a Housing Rehabilitation Grant Award to Earnestine White of 208 Willis Avenue in an amount not to exceed $50,000 according to the Housing Rehabilitation and Housing Programs Manual Section VII (E). {Entitlement}

There being no discussion, the Motion received the affirmative vote of the Council as follows:

Yeas: 5 - George, Delgado, Carroll, Dryden and Brown

Nays: 0

VI.-14 2018-587 Approve the purchase of Stalker DSR Radar Units from Applied Concepts, Inc. for the Hattiesburg Police Department in an amount not to exceed $24,153.00 as a sole source purchase as provided for in Section 31-7-3(viii) of the Mississippi Code of 1972, based on information in the attached letter and memorandum.

Attachments: Chief Memo 2018 Stalker
Sole Source-Stalker 2018
Quote-Stalker 2018

A MOTION was made by Council Vice President Dryden and seconded by Council member George to Approve the purchase of Stalker DSR Radar Units from Applied Concepts, Inc. for the Hattiesburg Police Department in an amount not to exceed $24,153.00 as a sole source purchase as provided for in Section 31-7-3(viii) of the Mississippi Code of 1972.

There being no discussion, the Motion received the affirmative vote of the Council as follows:

Yeas: 5 - George, Delgado, Carroll, Dryden and Brown

Nays: 0

VI.-15 2018-601 Acknowledge the submission of an amendment request for award MS-2017-006-01 to the Federal Transit Administration to incorporate the FY 2018 allocation of Section 5307 funds for Operating Assistance, Capital Assistance (Preventive Maintenance), and Capital (Rolling Stock). This amendment seeks to incorporate $1,043,000 in federal funds and $626,714 in local match. (nunc pro tunc)

Attachments: View Print Application - MS-2017-006-01

A MOTION was made by Council Member George and seconded by Council Vice President Dryden to Acknowledge the submission of an amendment request for award MS-2017-006-01 to the Federal Transit Administration to incorporate the FY 2018 allocation of Section 5307 funds for Operating Assistance, Capital Assistance (Preventive Maintenance), and Capital (Rolling Stock). This amendment seeks to incorporate $1,043,000 in federal funds and $626,714 in local match. (nunc pro tunc)

There being no discussion, the Motion received the affirmative vote of the Council as follows:

Yeas: 5 - George, Delgado, Carroll, Dryden and Brown

Nays: 0

VI.-16 2018-633 Approve or Deny changes to wages and salaries in the Hattiesburg Police Department, Dispatch Division, in accordance with Ordinance 3154.

Attachments: Copy of Evidence Position Salary Adjustment 07.16.18-Edit 2

A MOTION was made by Council Vice President Dryden and seconded by Council member George to Approve changes to wages and salaries in the Hattiesburg Police Department, Dispatch Division, in accordance with Ordinance 3154.

There being no discussion, the Motion received the affirmative vote of the Council as follows:

Yeas: 5 - George, Delgado, Carroll, Dryden and Brown

Nays: 0

VI.-17 2018-634 Authorize Mayor to execute an agreement between the City of Hattiesburg and the University of Southern Mississippi, entering into a pilot program to offer full-time employees with an opportunity to complete their undergraduate education.

Attachments: USM Agreement w/COH for Employee Education

A MOTION was made by Council Vice President Dryden and seconded by Council member George to Authorize Mayor to execute an agreement between the City of Hattiesburg and the University of Southern Mississippi, entering into a pilot program to offer full-time employees with an opportunity to complete their undergraduate education.

There being no discussion, the Motion received the affirmative vote of the Council as follows:

Yeas: 5 - George, Delgado, Carroll, Dryden and Brown

Nays: 0

VI.-18 2018-632 Authorize Director of Engineering, Lamar Rutland, to make application to MDOT-FAA for 100% Reimbursable Supplementary Discretionary Funding in the amount of $1,000,000 for a Ramp Rehabilitation project.

Attachments: FW_ $1B Supplemental Discretionary Funding Requests
Supplemental Guidance
Federal Register Notice 2018-14675

A MOTION was made by Council member George and seconded by Council Vice President Dryden to Authorize Director of Engineering, Lamar Rutland, to make application to MDOT-FAA for 100% Reimbursable Supplementary Discretionary Funding in the amount of $1,000,000 for a Ramp Rehabilitation project.

There being no discussion, the Motion received the affirmative vote of the Council as follows:

Yeas: 5 - George, Delgado, Carroll, Dryden and Brown

Nays: 0

VI.-19 2018-629 Acknowledge receipt of the Hazard Mitigation Grant award for the acquisition and green space conversion of the property located at 2100 Eddy Street, Project 4248-0015, and authorize Mayor to execute the same; total project cost $153,459.00 with $115,094.00 federal and $38,365.00 local match to be provided by property seller.

Attachments: 4248-0015 Hattiesburg Agreements

A MOTION was made by Council Vice President Dryden and seconded by Council member George to Acknowledge receipt of the Hazard Mitigation Grant award for the acquisition and green space conversion of the property located at 2100 Eddy Street, Project 4248-0015, and authorize Mayor to execute the same; total project cost of $153,459.00 with $115,094.00 federal and $38,365.00 local match to be provided by property seller.

There being no discussion, the Motion received the affirmative vote of the Council as follows:

Yeas: 5 - George, Delgado, Carroll, Dryden and Brown

Nays: 0

THE ROUTINE AGENDA came before the Council.

A MOTION was made by Council member George and seconded by Council Vice President Dryden to approve the Routine Agenda as amended.

There being no discussion, the Motion received the affirmative vote of the Council as follows:

Yeas: 5 - George, Delgado, Carroll, Dryden and Brown

Nays: 0

VII.-1 2018-591 Acknowledge receipt of the monthly budget report for the month ending June 30, 2018.

Attachments: REV18.0618
EXP18.0618

VII.-2 2018-607 Acknowledge receipt of June 2018 Privilege Tax License Report.

Attachments: Memo-Privilege License Report for June 2018
Privilege License Report-June-2018

VII.-3 2018-597 Acknowledge Proof of Publication for the month of June 2018.

Attachments: PUBLICATIONS FOR JUNE 2018

VII.-4 2018-596 Acknowledge receipt of the Fiscal Year 2019 budget for the Pine Belt Regional Solid Waste Management Authority.

VII.-5 2018-593 Acknowledge FY18 High Intensity Drug Trafficking Areas (HIDTA) Subgrantee Cooperative Agreement between the Mississippi Bureau of Narcotics, the Mississippi Gulf Coast High Intensity Drug Trafficking Area and the Hattiesburg Police Department to fund one police officer In the amount of $ 25,931.00 for drug trafficking prevention activities. (nunc pro tunc)

Attachments: FY18 HIDTA Agreement

VII.-6 2018-610 Acknowledge receipt of fully executed permanent easement from Fordham-Thompson Development for a portion of Lamar County Tax Parcel No. 051G-01-292-001 for the COMSWIP Sewer Phase V project.

Attachments: Signed Easement.Fordham-Thompson Development

VII.-7 2018-612 Acknowledge bids received June 7, 2018 for the 28th Avenue Bridge Replacement Project and reject all bids as exceeding cost estimates; Authorize re-advertisement for bids.

Attachments: Advertisement for Bids-rebid 2
`
11204_Bid Rejection_(Lamar)
Certified Bid Tab
11204 construction plans signed 2018-07-11
11204_Specs_Street Ready_2018_07_11

VII.-8 2018-418 Authorize the Mayor to execute a rental agreement between The City of Hattiesburg and RICOH for two (2) copiers located in the City Court building for a period of 48 months, at a cost of $287.51 per month.

Attachments: RICOH Rental Agreement for City Court

VII.-9 2018-595 Approve and authorize issuance of manual check for CDBG Program Claim per attached memorandum. {Entitlement CDBG}

Attachments: MEMORANDUM FOR CDBG CLAIMS AJULY 17, 2018.pdf

VII.-10 2018-608 Approve Plans and Specifications for the 2018 Water System Improvements Project; Authorize advertisement for bids for same.

Attachments: ADVERTISEMENT FOR BIDS
11268_Plans_Street Ready Set_Signed_2018-07-09
11268_Specs_Street Ready_2018_07_09

VII.-11 2018-609 Approve Plans and Specifications for the Drainage Project at Priority One Bank; Authorize advertisement for bids for same.

Attachments: Advertisement for Bids
11269_Plans_Street Ready Set__Signed_2018-07-09
11269_Specs_2018_07_09

VII.-12 2018-594 Approve the sale of grave spaces, per attached Receipts, Memo's and Deeds.

Attachments: Receipts (07-17-18)
Memo's (07-17-18)
Deeds (07-17-18)

VII.-13 2018-628 Approve claims docket for the period ending July 13, 2018.

Attachments: DOCKET 18.07-13
Addendum (addition) to the docket of claims

Council President Carroll called for additional business.

There was no additional business.

By unanimous consent, Council President Carroll declared the meeting adjourned at 5:17 p.m., this the 17th day of July, A.D. , 2018.

THIS PAGE LEFT BLANK INTENTIONALLY

City of Hattiesburg, MS

200 Forrest St.
P.O. Box 1898
Hattiesburg, MS 39401

Master

File Number: 2018-649

File ID:	2018-649	**Type:**	Ordinance	**Status:**	Policy Agenda
Version:	2	**Reference:**		**In Control:**	City Council
Requester:	Ginger Lowrey			**File Created:**	07/30/2018
Brief Title:	Take from the table and adopt an Ordinance to rezone 301 Gordon Street, Ward 2			**Final Action:**	08/07/2018
				Minute Book Number:	MB 2018-190

Title: Take from the table and adopt an Ordinance for the petition filed by Paul H. Williams, Owner, Richard E. Braswell, Owner, to change the zoning classification for 301 Gordon Street (Parcel 2-029H-03-371.00, PPIN 22168, Ward 2) from Section 4.5.7, R-3 (Multi-Family Residential) District to Section 4.5.9, B-2 (Community Business) District. The Planning Commission recommended to Approve on July 5, 2018.

Notes:			
		Agenda Date:	08/07/2018
Indexes:		**Agenda Number:**	VI.-1
Sponsors:		**Enactment Date:**	
Attachments:	July HPC Minutes DRAFT, 301 Gordon St - Zoning change - Planning Report, Applicant sheet - 7-18-18, Letter from property owner requesting revised zoning, Revised Ordinance (B-2) - 301 Gordon St, Executed - Ordinance #3238 301 Gordon St - Zoning change from R-3 to B-2	**Enactment Number:**	
Contact:		**Meeting Date:**	08/07/2018
Drafter:		**Effective Date:**	

History of Legislative File

Version:	Acting Body:	Date:	Action:	Sent To:	Due Date:	Return Date:	Result:
1	City Council	08/07/2018	Adopt				Pass

Action Text: A MOTION was made by Council Vice President Dryden and seconded by Council Member George to Take from the table and adopt an Ordinance (#3238) for the petition filed by Paul H. Williams, Owner, Richard E. Braswell, Owner, to change the zoning classification for 301 Gordon Street (Parcel 2-029H-03-371.00, PPIN 22168, Ward 2) from Section 4.5.7, R-3 (Multi-Family Residential) District to Section 4.5.9, B-2 (Community Business) District. The Planning Commission recommended to Approve on July 5, 2018.

There being no discussion, the Motion received the affirmative vote of the Council as follows:

Yeas: 4 - George, Carroll, Dryden and Brown

Nays: 0

Abstain: 1 - Delgado

Yea:	4	Council Member George
		Council President Carroll
		Council Vice President Dryden
		Council Member Brown
Abstain:	1	Council Member Delgado

Text of Legislative File 2018-649

Title

Take from the table and adopt an Ordinance for the petition filed by Paul H. Williams, Owner, Richard E. Braswell, Owner, to change the zoning classification for 301 Gordon Street (Parcel 2-029H-03-371.00, PPIN 22168, Ward 2) from Section 4.5.7, R-3 (Multi-Family Residential) District to Section 4.5.9, B-2 (Community Business) District. The Planning Commission recommended to Approve on July 5, 2018.

Summary

Adopt an Ordinance to rezone 301 Gordon Street, Ward 2

Budget Information

Expenditure Type

Purchasing Item

Publication Information

MINUTES OF THE

REGULAR MEETING OF THE

HATTIESBURG PLANNING COMMISSION

July 5, 2018

The Hattiesburg Planning Commission did meet in a regular session on July 5, 2018 at 1:00 p.m. at the Jackie Dole Community Center, 220 West Front Street, Hattiesburg, Mississippi. Dick Conville, Chairman, presided over the meeting. A quorum was indicated and the attendance was as follows:

Commissioners Present: Charlene Allshouse
Dick Conville, Chairman
Amy Hinton, Vice-Chairman
Rebekah Ray
Paul Sims
Kenneth Waites

Commissioners Absent: Ricardo Bryant
Judy Corts
James Hughes
Mark Miller
Sandra Thompson

Also Present: Ginger Maddox Lowrey, AICP, Planning Division Manager
Andrew Ellard, Director

Chairman Conville declared the meeting of the Hattiesburg Planning Commission open and in session at 1:05 P.M.

INVOCATION

Commissioner Ray gave invocation.

AGENDA REVIEW

There came the matter of the July 2018 Agenda. A request was made by Chairman Conville for a motion to approve the July 2018 Agenda. A motion was made to approve the July 2018 Agenda by Commissioner Hinton and seconded by Commissioner Ray.

Commissioners voting aye: Charlene Allshouse
Dick Conville, Chairman
Amy Hinton, Vice-Chairman
Rebekah Ray
Paul Sims
Kenneth Waites

Commissioners voting nay: None

MINUTES REVIEW

There came the matter of the June 6, 2018, minutes. A request was made by Chairman Conville for a motion to approve the June 6, 2018 minutes. A motion was made by Commissioner Ray to approve the minutes with corrections and seconded by Commissioner Allshouse.

Commissioners voting aye: Charlene Allshouse

Dick Conville, Chairman
Amy Hinton, Vice-Chairman
Rebekah Ray
Paul Sims
Kenneth Waites

Commissioners voting nay: None

REPORTS

BUILDING REPORT

There came the matter of the Building Inspection Report. Staff provided a building report for June 2018.

PLANNING REPORT

There came the matter of the Planning Report by Ginger M. Lowrey, AICP, Planning Division Manager. Mrs. Lowrey informed the Commission of Stephen Guthrie's resignation. He has accepted a job in China with a development company.

On June 18, 2018 the City Council heard the appeal of the zoning change denial recommendation for 208 N. 38th Ave. from B-2 to B-3. On May 19, 2018 the City Council reviewed the following Hattiesburg Planning Commission recommendations and voted as follows: The City Council approved the closure of an alley filed by Alexander Ignatiev (HPC approval upheld). The City Council approved the rezoning of 5224 Old Hwy 42 from I-1 to B-5 (HPC approval upheld). The City Council approved the text amendment to LDC, Section 10 Signs (HPC approval upheld). The City Council denied the rezoning of 208 N. 38th Ave. (HPC denial upheld). A Bill of Exceptions was filed following the City Council action on 208 N. 38th Ave.

Mrs. Lowrey confirmed the Commission of training opportunity for the Planning Commission set for July 24.

CHAIRMAN'S REPORT

There came the matter of the Chairman's Report. No report was submitted

PUBLIC HEARING – PLANNING COMMISSION

Chairman Conville declared the Public Hearing for the Planning Commission open at 1:26 P.M. and read the rules and procedures of the hearing.

Old Business

There came the matter of the tabled Item A (Text Amendment), to take from the table and consider a petition filed by The City of Hattiesburg, as required in the Land Development Code, Ord. No. 3209, to amend the Land Development Code Section 10, Signs, including only the previously tabled amendments presented at the June Hattiesburg Planning Commission Public Hearing.

	Name	Address	City/State
Presented by:	The City of Hattiesburg		
Proponents:	None		
Opponents:	None		

Chairman Conville declared the Public Hearing closed and the Business Meeting open to vote on the request. Commissioner Hinton made a motion to approve the request with correction to grammar in section a., adding the word "required" to the third sentence, and in section f., adding "Board of Adjustment" to the approvals required in the third sentence. The motion was seconded by Commissioner Sims.

Commissioners voting aye: Charlene Allshouse
Dick Conville, Chairman
Amy Hinton, Vice-Chairman
Rebekah Ray
Paul Sims
Kenneth Waites

Commissioners voting nay: None

Commissioners abstaining: None

New Business

There came the matter of Item A (Digital Billboard), filed by Dan Adams, Applicant, as required in the Land Development Code, Ord. No. 3209, to request a permit for a replacement "Digital Billboard" as provided in Section 10.13.6 and all applicable regulations for a certain property located at 4649 Hardy Street (Parcel 051Q-12-002.000, PPIN 21452, Ward 3).

	Name	Address	City/State
Presented by:	Dan Adams	2055 Oak Grove Road	Hattiesburg, MS
Proponents:	None		
Opponents:	None		

Chairman Conville declared the Public Hearing closed and the Business Meeting open to vote on the request. Commissioner Sims made a motion to approve the request. The motion was seconded by Commissioner Waites.

Commissioners voting aye: Charlene Allshouse
Dick Conville, Chairman
Amy Hinton, Vice-Chairman
Rebekah Ray
Paul Sims
Kenneth Waites

Commissioners voting nay: None

Commissioners abstaining: None

There came the matter of Item B (Rezoning), filed by Paul H. Williams, Owner, Richard E. Braswell, Owner, as required in the Land Development Code, Ord. No. 3209, to change the zoning classification for a certain property located at 301 Gordon Street (Parcel 2-029H-03-371.00, PPIN 22168, Ward 2) from Section 4.5.7, R-3 (Multi-Family Residential) District to Section 4.5.10, B-3 (Community Business) District.

	Name	Address	City/State
Presented by:	Paul H. Williams	301 Gordon St.	Hattiesburg, MS
Proponents:	None		
Opponents:	None		

Chairman Conville declared the Public Hearing closed and the Business Meeting open to vote on the request. Commissioner Waites made a motion to approve the request for rezoning because there is a material change in the circumstances and conditions of the neighborhood and area surrounding the petitioned property and there is a public need for the change in question, based on the Comprehensive Plan. The motion was seconded by Commissioner Sims.

Commissioners voting aye: Charlene Allshouse
Dick Conville, Chairman
Amy Hinton, Vice-Chairman
Paul Sims
Kenneth Waites

Commissioners voting nay: Rebekah Ray

Commissioners abstaining: None

BUSINESS MEETING

There being no further business, the meeting was adjourned at 1:55 PM. Commissioner Hinton made a motion to adjourn the meeting. The motion was seconded at Commissioner Waites.

_____
Chairman Conville

_____
Ginger Maddox Lowrey, AICP, CFM, Planning Division Manager

SUBJECT PARCEL:
301 GORDON STREET

Paul H. Williams, Owner

The applicant requests to change the zoning classification for a certain property located at 301 Gordon Street (Parcel 2-029H-03-371.00, PPIN 22168, Ward 2) from Section 4.5.7, R-3 (Multi-Family Residential) District to Section 4.5.10, B-3 (Community Business) District.

Vicinity Map—Ward 2

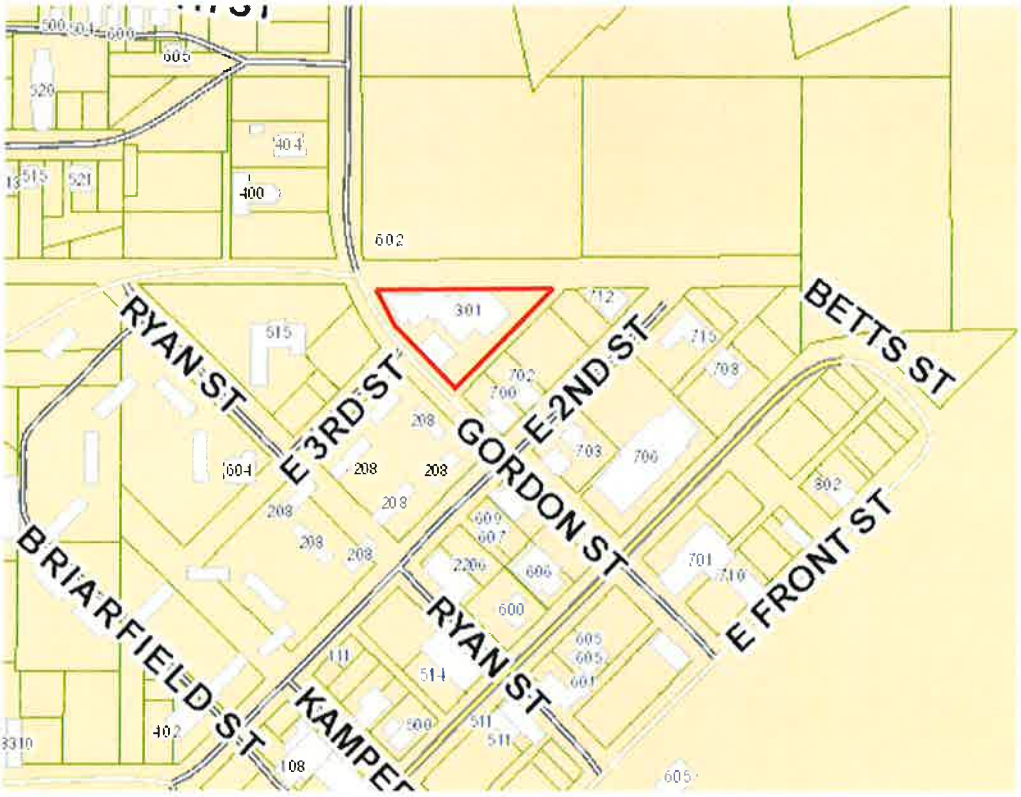

Zoning—R-3

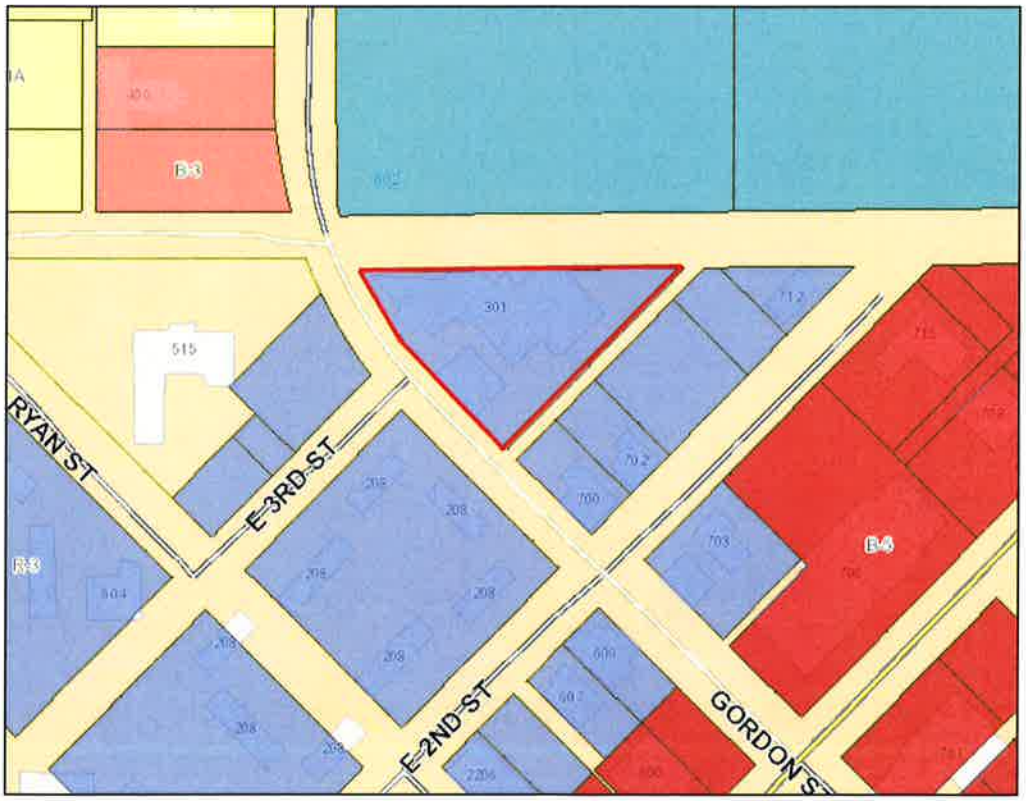

Site Aerial

SURROUNDING AREA

Northern Direction: I-1 (Light Industrial) District / Industrial

Southern Direction: R-3 (Multi-Family Residential) District / Residential

Eastern Direction: R-3 (Multi-Family Residential) District / Residential

Western Direction: B-3 (Community Business) District / Commercial and R-3 (Multi-Family Residential) District / Residential

Planning Commission
Case Fact Sheet

Property Owner: Paul H. Williams

Address of Properties:	**Tax Parcels**	**PPIN:**	**Ward:**
301 Gordon Street	2-029H-03-371.00	22168	2

Request: **Zoning Change**

Purpose of Request: To consider an application to change the zoning classification for a certain property located at 301 Gordon Street (Parcel 2-029H-03-371.00, PPIN 22168, Ward 2) from Section 4.5.7, R-3 (Multi-Family Residential) District to Section 4.5.10, B-3 (Community Business) District.

Applicant Summary: See Attached

Applicable Regulations:

SECTION 4 **Zoning Districts Established**

4.5.7 R-3 Multi-Family Residential District: The purpose of the R-3 District is to permit medium and high density residential uses including multi-family, two-family, and single-family structures with related recreational, religious and educational facilities. This district is consistent with the Neighborhood Conservation 1 and 2 districts in the Comprehensive Plan. This zoning district encourages protected residential neighborhoods with only compatible supporting institutional uses and open space.

4.5.10 B-3 Community Business District: The purpose of the B-3 District is to provide for retail, personal service, and offices in locations with convenient access to the community consistent with comprehensive planning policies. This district is consistent with the Community Business District in the Comprehensive Plan.

Present Zoning: This parcel is currently zoned R-3 (Multi-Family Residential)

Present Use: Vacant

Surrounding Zoning and Land Use:

North: I-1 (Light Industrial) District / Industrial
South: R-3 (Multi-Family Residential) District / Residential
East: R-3 (Multi-Family Residential) District / Residential
West: B-3 (Community Business) District / Commercial
R-3 (Multi-Family Residential) District / Residential

Most Nearly Bounded By (streets): This parcel is accessible from the North, South, and West by Gordon Street. It is bound on the East by East 2nd Street.

Letters or Concerns stated: The Planning Division Office has not received any letters or other written communications relative to this case as of June 20, 2018

Basis for Approval:

1. There is a mistake in the original zoning.
2. The character of the neighborhood **(has / has not)** changed substantially so that rezoning is clearly justified and there **(is / is not)** a public need for the rezoning
3. Annexation

Rezoning Information *(1 page)*

One of the following conditions must be met before a rezoning can be recommended.
Check the condition(s) most applicable to your request and explain in writing.

(A) There is a material change in the circumstances and conditions of the neighborhood and area surrounding the petitioned property and there is a public need for the change in question, based on the Comprehensive Plan.

B. There is a mistake in the original zoning.

C. Annexation

Detailed explanation of condition(s) most applicable to your request: (Please print or type.)

Rice Braswell + Williams LLC, formerly Rice's Inc. occupied 301 Gordon street for almost 78 years. After we stoped business here the vacant commercial property, with large exterior covered areas, became a hang out for vagrants and homeless. The occupied property will eliminate this problem and make a safer area for its neighbors. The owners plan, if possible, to locate a convenience store in a portion of the property which will be a big convience to the residence of the Briarfield Complex. Many residence do not have transportation needed to reach the nearest store located at 4th + Main St. I have interviewed residence and all seem excited about this possibility. The large green areas will be kept clean and better maintained. The more than adequate parking should remedy any traffic congestion. The occupied property will provide a buffer between local residents and the often noise of heavy equipment used in the scrap yard next door.

Rezoning Information *(1 page)*

One of the following conditions must be met before a rezoning can be recommended.
Check the condition(s) most applicable to your request and explain in writing.

A. There is a material change in the circumstances and conditions of the neighborhood and area surrounding the petitioned property and there is a public need for the change in question, based on the Comprehensive Plan.

B. There is a mistake in the original zoning.

C. Annexation

The following is a more accurate Explination of the intended use for the property.

Detailed explanation of condition(s) most applicable to your request: (Please print or type.)

The prospective buyer for the property intendes to use it for the purpose of operating a tire store and doing minor Automotive mechanical Repairs such as instaling brakes, Front end Alignments, and other minor Repairs. They own and operate two other successful such locations within the City of Hattiesburg. A portion of the Facility will be used for warehousing merchandise & tires.

There is Approximately 15,000 Square Feet of covered Space, Some of which might be used for other approved purposes, The property is obviously a Commercial style Structure And could not be Converted To Anything Resedential. If occupied it will Elevate the Area And become a well kept good Neighbor. If left unoccupied it will become delapidated ~~[illegible]~~ Eye Sore And A blight on the Neighborhood. The present ownership has kept the Property well maintained And Even Recently Painted.

RECEIVED
JUL 18 2018
BY: GMC

Paul H. Williams
67 Quail Hollow Drive
Hattiesburg, Mississippi

RECEIVED
AUG 07 2018
K. Estes

Monday August 6, 2018

City of Hattiesburg

Planning Division

Re: Petition of Paul H. Williams

Dear Sir:

Please consider this to be my official request to change the zoning of 301 Gordon street from R3 to B2. My original application requested that the change be made from an R3 to B3 however, I have discovered that down grading to a B2 will adequately meet our needs. We have no intentions of putting a convenience store on the property and selling beer and cigarettes. We intend to use the property for the sole purpose of locating a tire store and doing minor mechanical work such as installing brakes and batteries, front end alignments, and other minor repairs. Some of the space would also be used to warehouse tires and supplies.

My apology for not understanding the complexity of some of the zoning designations. A change from R3 to B2 should meet our needs nicely. Thank you for considering this change.

Sincerely yours,

Paul H. Williams

Paul H. Williams

Prepared by: City of Hattiesburg
City Clerk's Office
P.O. Box 1898
Hattiesburg, MS 39403-1898
(601)545-4550

Return to: City of Hattiesburg
City Clerk's Office
P.O. Box 1898
Hattiesburg, MS 39403
(601)545-4550

INDEXING INSTRUCTIONS:

ORDINANCE NUMBER _____

OF THE

CITY OF HATTIESBURG, MISSISSIPPI

AN ORDINANCE CHANGING AND AMENDING THE COMPREHENSIVE ZONING DISTRICT MAP, ADOPTED AS PART OF THE LAND DEVELOPMENT CODE ORDINANCE NO. 3209, AS AMENDED, OF THE CITY OF HATTIESBURG, MISSISSIPPI FOR A CERTAIN PROPERTY LOCATED AT 301 GORDON STREET (PARCEL 2-029H-03-371.00, PPIN 22168, WARD 2) FROM SECTION 4.5.7, R-3 (MULTI-FAMILY RESIDENTIAL) DISTRICT TO SECTION 4.5.9, B-2 (NEIGHBORHOOD BUSINESS) DISTRICT.

BE IT ORDAINED BY THE MAYOR AND COUNCIL OF THE CITY OF HATTIESBURG, MISSISSIPPI:

SECTION 1. That the Comprehensive Zoning District Map, adopted as part of the Comprehensive Zoning Ordinance No. 3209, as amended, of the City of Hattiesburg, Mississippi, be and the same is hereby changed and amended. The Hattiesburg Planning Commission recommended to Approve said change in zoning for the following reasons:

There is a material change in the circumstances and conditions of the neighborhood and area surrounding the petitioned property and there is a public need for the change in question, based on the comprehensive plan

Said properties are described as follows:

Lot 7, 8, 9, and 10of the C. R. Norman subdivision of Blocks 15 and 16 of the Hardy & Scott Survey of the city of Hattiesburg, as per map or plat thereof on file in the office of the Chancery Clerk of Forrest county Mississippi and

That portion of East Third Street lying between Lots 8 and 9 and lot 10 which was closed and vacated by Municipal Ordinance No. 1222 of the City of Hattiesburg, which ordinance appears of record in the Municipal Minutes of the City of Hattiesburg, Mississippi, reference to which is hereby made for all purposes.

TOGETHER WITH all improvements thereon and appurtenances thereunto belonging

SECTION 2. Except as hereby expressly changed and amended, the aforesaid Comprehensive Zoning District Map and the Land Development Code Ordinance No. 3209, as amended, of said City of Hattiesburg, Mississippi, shall be and remain in full force and form as adopted.

SECTION 3. That this Ordinance take effect and be in force thirty (30) days from and after passage as provided by law.

The foregoing Ordinance having been reduced to writing, the same was introduced by Council member _____ seconded by Council member _____ and was adopted by the following vote to-wit:

YEAS: NAYS:

THE President thereby declared the motion carried and the foregoing Ordinance adopted and approved, this the_____day of_____ A.D., 2018.

(S E A L)

ATTEST: ADOPTED:

_____ _____

CLERK OF COUNCIL PRESIDENT

THE above and foregoing Ordinance having been submitted to and approved by the Mayor, this the_____day of_____ A.D., 2018.

ATTEST: APPROVED:

_____ _____

CITY CLERK MAYOR

Prepared by: City of Hattiesburg
City Clerk's Office
P.O. Box 1898
Hattiesburg, MS 39403-1898
(601)545-4550

Return to: City of Hattiesburg
City Council's Office
P.O. Box 1898
Hattiesburg, MS 39403
(601)545-4550

INDEXING INSTRUCTIONS:

ORDINANCE NUMBER 3238
OF THE
CITY OF HATTIESBURG, MISSISSIPPI

AN ORDINANCE CHANGING AND AMENDING THE COMPREHENSIVE ZONING DISTRICT MAP, ADOPTED AS PART OF THE LAND DEVELOPMENT CODE ORDINANCE NO. 3209, AS AMENDED, OF THE CITY OF HATTIESBURG, MISSISSIPPI FOR A CERTAIN PROPERTY LOCATED AT 301 GORDON STREET (PARCEL 2-029H-03-371.00, PPIN 22168, WARD 2) FROM SECTION 4.5.7, R-3 (MULTI-FAMILY RESIDENTIAL) DISTRICT TO SECTION 4.5.9, B-2 (NEIGHBORHOOD BUSINESS) DISTRICT.

BE IT ORDAINED BY THE MAYOR AND COUNCIL OF THE CITY OF HATTIESBURG, MISSISSIPPI:

SECTION 1. That the Comprehensive Zoning District Map, adopted as part of the Comprehensive Zoning Ordinance No. 3209, as amended, of the City of Hattiesburg, Mississippi, be and the same is hereby changed and amended. The Hattiesburg Planning Commission recommended to Approve said change in zoning for the following reasons:

There is a material change in the circumstances and conditions of the neighborhood and area surrounding the petitioned property and there is a public need for the change in question, based on the comprehensive plan

Said properties are described as follows:

Lot 7, 8, 9, and 10of the C. R. Norman subdivision of Blocks 15 and 16 of the Hardy & Scott Survey of the city of Hattiesburg, as per map or plat thereof on file in the office of the Chancery Clerk of Forrest county Mississippi and

That portion of East Third Street lying between Lots 8 and 9 and lot 10 which was closed and vacated by Municipal Ordinance No. 1222 of the City of Hattiesburg, which ordinance appears

of record in the Municipal Minutes of the City of Hattiesburg, Mississippi, reference to which is hereby made for all purposes.

TOGETHER WITH all improvements thereon and appurtenances thereunto belonging

SECTION 2. Except as hereby expressly changed and amended, the aforesaid Comprehensive Zoning District Map and the Land Development Code Ordinance No. 3209, as amended, of said City of Hattiesburg, Mississippi, shall be and remain in full force and form as adopted.

SECTION 3. That this Ordinance take effect and be in force thirty (30) days from and after passage as provided by law.

The foregoing Ordinance having been reduced to writing, the same was introduced by Council Vice President Dryden seconded by Council Member George, and was adopted by the following vote to-wit:

YEAS:	**NAYS:**	**ABSENT:**
George	**None**	**None**
Delgado		
Carroll		
Dryden		
Brown		

THE President thereby declared the motion carried and the foregoing Ordinance adopted and approved, this the **7th** day of **August A.D., 2018**.

(S E A L)

ATTEST:

CLERK OF COUNCIL

ADOPTED:

PRESIDENT OF COUNCIL

THE above and foregoing Ordinance having been submitted to and approved by the Mayor, this the **7th** day of **August A.D., 2018**.

ATTEST:

CITY CLERK

APPROVED:

MAYOR

City of Hattiesburg, MS

200 Forrest St.
P.O. Box 1898
Hattiesburg, MS 39401

Master

File Number: 2018-651

File ID:	2018-651	**Type:**	Resolution	**Status:**	Passed
Version:	1	**Reference:**		**In Control:**	City Council
Requester:				**File Created:**	07/30/2018
Brief Title:	Adopt the August 7, 2018, Budget Amendments and resolution.			**Final Action:**	08/07/2018
				Minute Book Number:	MB 2018-191

Title:

Adopt the August 7, 2018 Amendments to the Budget for the City of Hattiesburg for the fiscal year ending September 30, 2018 and adopt resolution authorizing publication of amendments for funds in excess of 10% of the original appropriation fund balance.

Notes:			
		Agenda Date:	08/07/2018
Indexes:		**Agenda Number:**	VI.-2
Sponsors:		**Enactment Date:**	
Attachments:	August 2018 Budget Amendments, Executed - Res#2018-100 August 2018 Budget Amendments	**Enactment Number:**	
Contact:		**Meeting Date:**	08/07/2018
Drafter:		**Effective Date:**	

History of Legislative File

Version:	Acting Body:	Date:	Action:	Sent To:	Due Date:	Return Date:	Result:
1	City Council	08/07/2018	Adopt				Pass

Action Text: A MOTION was made by Council Member George and seconded by Council Vice President Dryden to Adopt the August 7, 2018 Amendments to the Budget for the City of Hattiesburg for the fiscal year ending September 30, 2018 and adopt resolution (#2018-100) authorizing publication of amendments for funds in excess of 10% of the original appropriation fund balance.

There being no discussion, the Motion received the affirmative vote of the Council as follows:

Yeas: 5 - George, Delgado, Carroll, Dryden and Brown

Nays: 0

Yea: 5 Council Member George
Council Member Delgado
Council President Carroll
Council Vice President Dryden
Council Member Brown

Text of Legislative File 2018-651

Title

Adopt the August 7, 2018 Amendments to the Budget for the City of Hattiesburg for the fiscal year ending September 30, 2018 and adopt resolution authorizing publication of amendments for funds in excess of 10% of the original appropriation fund balance.

Summary

Adopt the August 7, 2018, Budget Amendments and resolution.

Budget Information

Expenditure Type

Purchasing Item

Publication Information

newspaper

MEMORANDUM

TO	***:***	***Mayor Barker, Members of City Council***
FROM	***:***	***Connie Everett, Interim CFO***
DATE	***:***	***August 7, 2018***
SUBJECT	***:***	***Proposed Amendments, FY 2018***

Below is a summary of proposed amendments to the FY 2018 budget. Attached is a more detailed list of proposed changes to the General Fund, detailing the impact to the Fund's budgeted ending cash. Descriptions are also included for proposed changes to the budgets of other funds.

- Amendments for the General Fund are funded without using the budgeted ending fund balance. It increased slightly from $2,180,412 to $2,209,207.

Significant items specifically for the **General Fund** include:

- The Council budget was increased to cover audit costs for the FY 2017 audit.
- Sales tax was increased to account for additional revenue realized. The increased is used to fund the Camp Street project.
- Urban Development is budgeting federal grant revenue for a hazard mitigation grant to purchase a home in the flood plain and relocate the owner.
- Tipping fees for garbage and trash, as well as recycling fees, are increased about 4%.
- Audit entries affecting a few departments' fuel expense accounts were necessary in order to adjust the fuel inventory amount to the actual fuel on hand at 9/30/16.

Significant budget adjustments in other funds include:

Water & Sewer Operation & Maintenance Fund:

- An increase for the collection cost of unpaid water & sewer accounts, per the city's agreement with Water Company of America. Increase budget for water & sewer line repairs, fuel costs.

Mass Transit Fund:

- Increase budget for bus repair costs.

Special Street Improvements Fund:

- Adjust budget for state revenue received from fuel tax for road improvements.

If you have any questions concerning the proposed amendments, please feel free to contact me.

RECAP OF PROPOSED AMENDMENTS
7-Aug-18
FY 2018

GENERAL FUND:		
Budgeted Ending Cash as amended		**2,180,412**
Amendments to Revenues:		
Federal grants - Hazard Mitigation grant	228,795	
Sales tax	300,000	
Public Safety - special duty	40,000	
Miscellaneous - donation for Police Dept	7,000	
Total Amendments to Revenues		575,795
Amendments to Expenditures:		
City Council - audit expense	(40,000)	
Mayor/Admin-adjust telephone budget	6,000	
Purchasing - copier maintenance	(300)	
Urban Dev - hazard mitigation cost	(188,500)	
Gen. Govt Bldg - reallocate budget variance	27,812	
Ins/Other Svcs - reallocate budget variance	28,045	
Federal Programs - adjust budget for salaries, tornado repairs	55,320	
Police - fuel costs; other budget variances	88,723	
Police/Fire Trng - grant, donation	(17,000)	
Fire - audit entry for fuel	(50,900)	
Pub. Safety Contractual - special duty	(40,000)	
Streets - budget Camp St. project; fuel costs	(324,000)	
Engineering - engineering services	(20,000)	
Sanitation - tipping, recycling fees	(72,200)	
Total Amendments to General Fund Expenditures		(547,000)
Budgeted Ending Cash, as Amended		**$ 2,209,207**

SPECIAL STREET IMPROVEMENTS FUND:	
Adjust budgeted revenue and expense	**$ 36,332**
WATER & SEWER OPERATION & MAINTENANCE FUND:	
Increase budget for collection cost of unpaid water & sewer accounts, water & sewer line repairs, audit entries for fuel costs	**$ 418,440**
SERIES 1999 TIF BOND & INTEREST FUND:	
Adjust budget for interest earned and close fund	**$ 10**

SERIES 2004 TIF BOND & INTEREST FUND:		
Adjust budget for interest earned and close fund	$	480
SERIES 2015B TIF BOND & INTEREST FUND:		
Increase budget for interest expense	$	300
MASS TRANSIT FUND:		
Adjust budget for bus repair costs	$	15,000
SERIES 2012 WATER & SEWER BOND CONSTRUCTION FUND:		
Adjust budget for interest earned and close fund	$	5

RESOLUTION

WHEREAS, the Mayor and City Council of the City of Hattiesburg, Mississippi, have determined that expenditures within the City will exceed the original budget appropriation; and

WHEREAS, the additional appropriation needed is in excess of ten percent (10%) of the original appropriation, and in accordance with Section 21-35-25 of the Mississippi Code of 1972, as amended, shall be published;

NOW, THEREFORE, BE IT RESOLVED BY THE COUNCIL OF THE CITY OF HATTIESBURG:

Section 1. That the following budget amendments are hereby authorized to be made in the City's General Fund General Government Capital Outlay Unappropriated Fund Balance:

ORIGINAL BALANCE	CUMULATIVE AMENDMENTS	AMENDED BUDGET	DESCRIPTION OF ITEMS NOT PREVIOUSLY LISTED
$348,250	$549,188	$897,438	Demolition of church; hazard mitigation grant for purchase of bldg. in flood plain

Section 2. That the following budget amendments are hereby authorized to be made in the City's General Fund Police & Fire Training Capital Outlay Unappropriated Fund Balance:

ORIGINAL BALANCE	CUMULATIVE AMENDMENTS	AMENDED BUDGET	DESCRIPTION OF ITEMS NOT PREVIOUSLY LISTED
$-0-	$ 17,000	$17,000	Increase budget for grant and donation

Section 3. That the following budget amendments are hereby authorized to be made in the City's General Fund Fire Supplies Unappropriated Fund Balance:

ORIGINAL BALANCE	CUMULATIVE AMENDMENTS	AMENDED BUDGET	DESCRIPTION OF ITEMS NOT PREVIOUSLY LISTED
$314,913	$88,583	$403,496	Increase budget for fuel costs and vehicle repairs

Section 4. That the following budget amendments are hereby authorized to be made in the City's General Fund Code Enforcement Supplies Unappropriated Fund Balance:

ORIGINAL BALANCE	CUMULATIVE AMENDMENTS	AMENDED BUDGET	DESCRIPTION OF ITEMS NOT PREVIOUSLY LISTED
$28,100	$6,000	$34,100	Increase budgets for office supplies and vehicle repair parts

Section 5. That the following budget amendments are hereby authorized to be made in the City's General Fund Public Services Other Services & Charges Unappropriated Fund Balance:

ORIGINAL BALANCE	CUMULATIVE AMENDMENTS	AMENDED BUDGET	DESCRIPTION OF ITEMS NOT PREVIOUSLY LISTED
$4,052,463	$571,900	$4,624,363	Increase budget for engineering services, street repairs, and refuse disposal costs

Section 6. That the following budget amendments are hereby authorized to be made in the City's Special Street Improvements Fund Other Services & Charges Unappropriated Fund Balance:

ORIGINAL BALANCE	CUMULATIVE AMENDMENTS	AMENDED BUDGET	DESCRIPTION OF ITEMS NOT PREVIOUSLY LISTED
$75,500	$36,332	$111,832	Adjust budget for street repairs

Section 7. That the following budget amendments are hereby authorized to be made in the City's Water & Sewer Operation & Maintenance Fund Other Services & Charges Unappropriated Fund Balance:

ORIGINAL BALANCE	CUMULATIVE AMENDMENTS	AMENDED BUDGET	DESCRIPTION OF ITEMS NOT PREVIOUSLY LISTED
$6,398,194	$1,265,000	$7,663,194	Adjust budget for water & sewer line repairs; fee for collection of unrealized utility revenue; audit costs

Section 8. That public interest and necessity requiring same, this resolution shall become effective immediately from and after passage, but nevertheless to be published according to law.

The above and foregoing Resolution, after having been first reduced to writing, was introduced by Councilperson _____, seconded by Councilperson _____, and was adopted by the following, to wit;

YEAS: NAYS:

The President thereby declared the motion carried and the Resolution adopted, this the 7th day of August, 2018.

(SEAL)

ATTEST: ADOPTED:

CLERK OF COUNCIL PRESIDENT

The above and foregoing Resolution having been submitted to and approved by the Mayor, this the 7th day of August, 2018.

ATTEST: APPROVED:

CITY CLERK MAYOR

CITY OF HATTIESBURG, MS. - GENERAL FUND
Analysis of Revenue and Expenditure Budgets
Fiscal Year Ending September 30, 2018

	Original FY 2018 Budgets	November Amend'ts	Proposed Amended Budgets	April Amend'ts	Amended Budgets	Proposed May Amend'ts	Amended Budgets	Proposed August Amend'ts	Proposed Amended Budgets
Revenues & Beg. Cash Balance:									
Taxes -Other	$35,000		$35,000		$35,000		$35,000		$35,000
Licenses & Permits	4,520,900		4,520,900		$4,520,900		$4,520,900		$4,520,900
Intergovernmental Revenues:							$0		$0
Federal	2,844,703	1,295,388	4,140,091	8,000	$4,148,091		$4,148,091	228,795	$4,376,886
State	168,299	100,000	268,299		$268,299		$268,299		$268,299
State-Shared	22,799,000	56,166	22,855,166		$22,855,166		$22,855,166	300,000	$23,155,166
County/City Shared	0		0		$0		$0		$0
Charges for Services:					$0		$0		$0
Public Safety	202,000		202,000		$202,000		$202,000	40,000	$242,000
Streets	1,000		1,000		$1,000		$1,000		$1,000
Sanitation	2,195,000		2,195,000		$2,195,000		$2,195,000		$2,195,000
Misc.	0		0		$0		$0		$0
Fines & Forf.	1,238,000		1,238,000		$1,238,000		$1,238,000		$1,238,000
Misc. Revenues	299,400		299,400	15,000	$314,400	3,000	$317,400	7,000	$324,400
Transfers-In	890,000	74,465	964,465		$964,465		$964,465		$964,465
Non-Revenue Receipts	1,127,412	575,000	1,702,412		$1,702,412		$1,702,412		$1,702,412
TOTAL REVENUES EXCLUSIVE OF			0		0		$0		$0
PROPERTY TAXES	$36,320,714	$2,101,019	$38,421,733	$23,000	$38,444,733	$3,000	$38,447,733	$575,795	$39,023,528
Beg. Fund Balance	6,500,000	-1,157,710	5,342,290		$5,342,290		5,342,290		$5,342,290
Property Tax Levy	17,114,000	0	17,114,000		$17,114,000		17,114,000		17,114,000
TOTAL AVAIL. REVENUES	**$59,934,714**	**$943,309**	**$60,878,023**	**$23,000**	**$60,901,023**	**$3,000**	**$60,904,023**	**$575,795**	**$61,479,818**
THE GENERAL FUND EXPENDITURE BUDGETS:									
001003 City Council									
Personnel	$386,770		$386,770		$386,770		386,770		386,770
Supplies & Expenses	3,700		3,700		$3,700		3,700		3,700
Other Services & Charges	174,400		174,400	80,050	$254,450	100,000	354,450	40,000	394,450
Capital Outlays	0		0		$0		0		0
Total - City Council	$564,870	$0	$564,870	$80,050	$644,920	$100,000	$744,920	$40,000	$784,920
001015 City Court									
Personnel	$1,052,864		$1,052,864		$1,052,864		1,052,864		1,052,864
Supplies & Expenses	37,600		37,600		$37,600		37,600	-500	37,100
Other Services & Charges	338,700	20,750	359,450		$359,450		359,450	500	359,950
Capital Outlays	0		0		$0		0		0
Total - City Court	$1,429,164	$20,750	$1,449,914	$0	$1,449,914	$0	$1,449,914	$0	$1,449,914
001020 Mayor/Admin.									
Personnel	$867,836	-$23,445	$844,391	-$43,830	$800,561		800,561		800,561
Supplies & Expenses	15,100		15,100		$15,100		15,100		15,100
Other Services & Charges	173,450		173,450		$173,450		173,450	-6,000	167,450

CITY OF HATTIESBURG, MS. - GENERAL FUND
Analysis of Revenue and Expenditure Budgets
Fiscal Year Ending September 30, 2018

	Original FY 2018 Budgets	November Amend'ts	Proposed Amended Budgets	April Amend'ts	Amended Budgets	Proposed May Amend'ts	Amended Budgets	Proposed August Amend'ts	Proposed Amended Budgets
Capital Outlays	2,000		2,000		$2,000		2,000		2,000
Total - Mayor/Admin.	$1,058,386	-$23,445	$1,034,941	-$43,830	$991,111	$0	$991,111	-$6,000	$985,111
001030 Elections									
Personnel	$0		$0		$0		$0		$0
Supplies & Expenses	0		0		$0	2,300	2,300		2,300
Other Services & Charges	0		0		$0	48,200	48,200		48,200
Capital Outlays	0		0		$0		0		0
Total - Elections	$0	$0	$0	$0	$0	$50,500	$50,500	$0	$50,500
001040 Muni. Clerk									
Personnel	$169,150	$4,944	$174,094	-$15,750	$158,344		$158,344		$158,344
Supplies & Expenses	5,650		5,650		$5,650		5,650		5,650
Other Services & Charges	50,600		50,600		$50,600		50,600		50,600
Capital Outlays	0		0		$0		0		0
Total - Muni Clerk	$225,400	$4,944	$230,344	-$15,750	$214,594	$0	$214,594	$0	$214,594
001042 Accounting									
Personnel	$305,424	$6,122	$311,546		$311,546		$311,546		$311,546
Supplies & Expenses	7,275		7,275		$7,275		7,275		7,275
Other Services & Charges	3,625		3,625		$3,625		3,625		3,625
Capital Outlays	0		0		$0		0		0
Total - Accounting	$316,324	$6,122	$322,446	$0	$322,446	$0	$322,446	$0	$322,446
001045 Purchasing									
Personnel	$146,527	-$44,433	$102,094	$67,783	$169,877		$169,877		$169,877
Supplies & Expenses	7,600		7,600		$7,600		7,600		7,600
Other Services & Charges	5,950		5,950		$5,950		5,950	300	6,250
Capital Outlays	0		0		$0		0		0
Total - Purchasing	$160,077	-$44,433	$115,644	$67,783	$183,427	$0	$183,427	$300	$183,727
001060 City Attorney									
Personnel	$94,465		$94,465		$94,465		$94,465		$94,465
Supplies & Expenses	0		0		$0		0		0
Other Services & Charges	7,800		7,800		$7,800		7,800		7,800
Capital Outlays	0		0		$0		0		0
Total - City Attorney	$102,265	$0	$102,265	$0	$102,265	$0	$102,265	$0	$102,265
001080 Human Resources									
Personnel	$187,189	$13,626	$200,815		$200,815		$200,815		$200,815
Supplies & Expenses	9,900		9,900		$9,900		9,900		9,900
Other Services & Charges	20,110		20,110		$20,110		20,110		20,110
Capital Outlays	0		0		$0		0		0

CITY OF HATTIESBURG, MS. - GENERAL FUND
Analysis of Revenue and Expenditure Budgets
Fiscal Year Ending September 30, 2018

	Original FY 2018 Budgets	November Amend'ts	Proposed Amended Budgets	April Amend'ts	Amended Budgets	Proposed May Amend'ts	Amended Budgets	Proposed August Amend'ts	Proposed Amended Budgets
Total - Human Resources	$217,199	$13,626	$230,825	$0	$230,825	$0	$230,825	$0	$230,825
001081 Loss Control									
Personnel	$113,567		$113,567		$113,567		$113,567		$113,567
Supplies & Expenses	7,460	-560	6,900		$6,900		6,900	-600	6,300
Other Services & Charges	2,100	1,900	4,000		$4,000		4,000	600	4,600
Capital Outlays	0		0		$0		0		0
Total - Loss Control	$123,127	$1,340	$124,467	$0	$124,467	$0	$124,467	$0	$124,467
001090 Urban Development									
Personnel	$630,438	$50,991	$681,429	$4,739	$686,168		$686,168		$686,168
Supplies & Expenses	29,255	-432	28,823		$28,823		28,823	-1,500	27,323
Other Services & Charges	68,197	45,000	113,197	15,000	$128,197		128,197	-10,000	118,197
Capital Outlays	0		0		$0		0	200,000	200,000
Total - Urban Dev.	$727,890	$95,559	$823,449	$19,739	$843,188	$0	$843,188	$188,500	$1,031,688
001091 Information Systems									
Personnel	$393,068		$393,068	-$7,640	$385,428		$385,428		$385,428
Supplies & Expenses	57,900		57,900		$57,900		57,900		57,900
Other Services & Charges	593,245		593,245		$593,245		593,245		593,245
Capital Outlays	326,250		326,250		$326,250		326,250		326,250
Total - Inf. Systems	$1,370,463	$0	$1,370,463	-$7,640	$1,362,823	$0	$1,362,823	$0	$1,362,823
001092 Gen. Gov't Building									
Personnel			$0		$0		$0		$0
Supplies & Expenses	27,035		27,035		$27,035		27,035		27,035
Other Services & Charges	249,249		249,249	-10,000	$239,249	20,000	259,249		259,249
Capital Outlays	20,000	377,000	397,000		$397,000		397,000	-27,812	369,188
Total - Gen. Gov't Building	$296,284	$377,000	$673,284	-$10,000	$663,284	$20,000	$683,284	-$27,812	$655,472
001093 Intermodal Facility (Depot) O & M:									
Personnel	$0		$0		$0		$0		$0
Supplies & Expenses	25,400		25,400		$25,400		25,400		25,400
Other Services & Charges	133,440		133,440	-5,000	$128,440		128,440		128,440
Capital Outlays	0		0		$0		0		0
Total - Depot O & M	$158,840	$0	$158,840	-$5,000	$153,840	$0	$153,840	$0	$153,840
001094 Metro Planning									
Personnel	$259,120		$259,120		$259,120		$259,120		$259,120
Supplies & Expenses	18,200		18,200		$18,200		18,200		18,200
Other Services & Charges	110,700		110,700	37,250	$147,950		147,950		147,950
Capital Outlays	0		0		$0		0		0
Total - Metro Planning	$388,020	$0	$388,020	$37,250	$425,270	$0	$425,270	$0	$425,270

CITY OF HATTIESBURG, MS. - GENERAL FUND
Analysis of Revenue and Expenditure Budgets
Fiscal Year Ending September 30, 2018

	Original FY 2018 Budgets	November Amend'ts	Proposed Amended Budgets	April Amend'ts	Amended Budgets	Proposed May Amend'ts	Amended Budgets	Proposed August Amend'ts	Proposed Amended Budgets
001095 Gen. Gov't Insurance/Other serv.									
Personnel	$0		$0		$0		$0		$0
Supplies & Expenses	0		0		$0		0		0
Other Services & Charges	2,996,700	5,325	3,002,025	-6,840	$2,995,185	-32,000	2,963,185	-28,045	2,935,140
Capital Outlays			0		$0		0		0
Total - Gen. Gov't Insur/other Serv.	$2,996,700	$5,325	$3,002,025	-$6,840	$2,995,185	-$32,000	$2,963,185	-$28,045	$2,935,140
001096 Federal Programs Administration									
Personnel	$168,026	-$70,733	97,293	$2,820	$100,113		100,113	$24,680	124,793
Supplies	32,839	$30,000	62,839		$62,839		62,839		62,839
Other Services & Charges	360,500	-$30,000	330,500	-$55,998	$274,502	-$100,000	174,502	-$80,000	94,502
Capital Outlay	0		0		$0		0		0
Total - Federal Programs Admin.	$561,365	-$70,733	$490,632	-$53,178	$437,454	-$100,000	$337,454	-$55,320	$282,134
Recap - General Government Cost Centers									
Personnel	***$4,774,444***	***-$62,928***	***$4,711,516***	***$8,122***	***$4,719,638***	***$0***	***$4,719,638***	***$24,680***	***$4,744,318***
Supplies & Expenses	***$284,914***	***$29,008***	***$313,922***	***$0***	***$313,922***	***$2,300***	***$316,222***	***-$2,600***	***$313,622***
Other Services & Charges	***$5,288,766***	***$42,975***	***$5,331,741***	***$54,462***	***$5,386,203***	***$36,200***	***$5,422,403***	***-$82,645***	***$5,339,758***
Capital Outlays	***$348,250***	***$377,000***	***$725,250***	***$0***	***$725,250***	***$0***	***$725,250***	***$172,188***	***$897,438***
Total - Gen. Government	***$10,696,374***	***$386,055***	***$11,082,429***	***$62,584***	***$11,145,013***	***$38,500***	***$11,183,513***	***$111,623***	***$11,295,136***
001100 Police									
Personnel	$11,111,742	$12,340	$11,124,082		$11,124,082		$11,124,082	-$64,500	$11,059,582
Supplies & Expenses	701,487	11,822	713,309	-1,000	$712,309		712,309	49,277	761,586
Other Services & Charges	487,797		487,797		$487,797	19,000	506,797	26,500	533,297
Capital Outlays	592,822	593,178	1,186,000		$1,186,000		1,186,000	-100,000	1,086,000
Total - Police	$12,893,848	$617,340	$13,511,188	-$1,000	$13,510,188	$19,000	$13,529,188	-$88,723	$13,440,465
001131 Police & Fire Training									
Personnel	$37,615		$37,615		$37,615		$37,615	$0	$37,615
Supplies & Expenses	149,732		149,732	-2,000	$147,732	3,000	150,732		150,732
Other Services & Charges	105,695		105,695	5,000	$110,695		110,695		110,695
Capital Outlays	0		0		$0		0	17,000	17,000
Total - Police & Fire Training	$293,042	$0	$293,042	$3,000	$296,042	$3,000	$299,042	$17,000	$316,042
001160 Fire									
Personnel	$8,048,588		$8,048,588		$8,048,588		$8,048,588	-$13,000	$8,035,588
Supplies & Expenses	314,913		314,913	25,000	$339,913	83	339,996	63,500	403,496
Other Services & Charges	305,523		305,523	-17,000	$288,523	-6,646	281,877	400	282,277
Capital Outlays	0	13,300	13,300		$13,300		13,300		13,300
Total - Fire Dept.	$8,669,024	$13,300	$8,682,324	$8,000	$8,690,324	-$6,563	$8,683,761	$50,900	$8,734,661

CITY OF HATTIESBURG, MS. - GENERAL FUND
Analysis of Revenue and Expenditure Budgets
Fiscal Year Ending September 30, 2018

		Original FY 2018 Budgets	November Amend'ts	Proposed Amended Budgets	April Amend'ts	Amended Budgets	Proposed May Amend'ts	Amended Budgets	Proposed August Amend'ts	Proposed Amended Budgets
001180	Code Enforcement									
	Personnel	$585,558	$57,119	$642,677	$3,860	$646,537		$646,537		$646,537
	Supplies & Expenses	28,100		28,100		$28,100		28,100	6,000	34,100
	Other Services & Charges	158,700		158,700		$158,700		158,700	-6,000	152,700
	Capital Outlays	0		0		$0		0		0
	Total - Code Enforcement	$772,358	$57,119	$829,477	$3,860	$833,337	$0	$833,337	$0	$833,337
001190	Contractual Services - Public Safety									
	Personnel	$221,800	-$25,000	$196,800		$196,800		$196,800	$40,000	$236,800
	Supplies & Expenses	0		0		$0		0		0
	Other Services & Charges	1,326,000	-30,000	1,296,000		$1,296,000		1,296,000		1,296,000
	Capital Outlays			0		$0		0		0
	Total - Cont. Serv. - Public Safety	$1,547,800	-$55,000	$1,492,800	$0	$1,492,800	$0	$1,492,800	$40,000	$1,532,800
	Public Services Cost Centers:									
001191	Traffic Maint.									
	Personnel	$411,522		$411,522		$411,522		$411,522		$411,522
	Supplies & Expenses	142,211		142,211		$142,211		142,211		142,211
	Other Services & Charges	46,364		46,364		$46,364		46,364		46,364
	Capital Outlays	0		0		$0		0		0
	Total - Traffic Maint.	$600,097	$0	$600,097	$0	$600,097	$0	$600,097	$0	$600,097
001201	Streets									
	Personnel	$1,913,731		$1,913,731		$1,913,731		$1,913,731		$1,913,731
	Supplies & Expenses	567,334		567,334	40,000	$607,334	-80,937	526,397	24,000	550,397
	Other Services & Charges	1,190,355	72,000	1,262,355	-5,000	$1,257,355		1,257,355	400,000	1,657,355
	Capital Outlays	155,000		155,000		$155,000		155,000	-100,000	55,000
	Total - Streets	$3,826,420	$72,000	$3,898,420	$35,000	$3,933,420	-$80,937	$3,852,483	$324,000	$4,176,483
001202	Street Lights									
	Personnel			$0		$0		$0		$0
	Supplies & Expenses			0		$0		0		0
	Other Services & Charges	1,170,000	-10,000	1,160,000		$1,160,000		1,160,000		1,160,000
	Capital Outlays	0		0		$0		0		0
	Total - Street Lights	$1,170,000	-$10,000	$1,160,000	$0	$1,160,000	$0	$1,160,000	$0	$1,160,000
001203	Engineering									
	Personnel	$375,475		$375,475		$375,475		$375,475		$375,475
	Supplies & Expenses	11,040		11,040		$11,040		11,040		11,040
	Other Services & Charges	303,360		303,360		$303,360	40,000	343,360	20,000	363,360
	Capital Outlays	0		0		$0		0		0
	Total - Engineering	$689,875	$0	$689,875	$0	$689,875	$40,000	$729,875	$20,000	$749,875

CITY OF HATTIESBURG, MS. - GENERAL FUND
Analysis of Revenue and Expenditure Budgets
Fiscal Year Ending September 30, 2018

	Original FY 2018 Budgets	November Amend'ts	Proposed Amended Budgets	April Amend'ts	Amended Budgets	Proposed May Amend'ts	Amended Budgets	Proposed August Amend'ts	Proposed Amended Budgets
001204 Shop									
Personnel	$541,857		$541,857		$541,857		$541,857		$541,857
Supplies & Expenses	45,845		45,845		$45,845		45,845		45,845
Other Services & Charges	39,000		39,000		$39,000		39,000		39,000
Capital Outlays	0		0		$0		0		0
Total - Shop	$626,702	$0	$626,702	$0	$626,702	$0	$626,702	$0	$626,702
001205 GOFS									
Personnel	$281,871		$281,871	-$25,989	$255,882		$255,882	-$1,800	$254,082
Supplies & Expenses	10,100		10,100		$10,100		10,100	-300	9,800
Other Services & Charges	16,500		16,500	2,300	$18,800		18,800	2,100	20,900
Capital Outlays	0		0		$0		0		0
Total - GOFS	$308,471	$0	$308,471	-$23,689	$284,782	$0	$284,782	$0	$284,782
001206 Drainage									
Personnel	$177,492		$177,492		$177,492		$177,492		$177,492
Supplies & Expenses	63,800		63,800		$63,800		63,800		63,800
Other Services & Charges	240,702		240,702	-97,300	$143,402		143,402		143,402
Capital Outlays	624,000	765,450	1,389,450		$1,389,450		1,389,450		1,389,450
Total - Drainage	$1,105,994	$765,450	$1,871,444	-$97,300	$1,774,144	$0	$1,774,144	$0	$1,774,144
001207 Construction									
Personnel	$758,668		$758,668		$758,668		$758,668		$758,668
Supplies & Expenses	147,600	8,800	156,400	12,000	$168,400		168,400		168,400
Other Services & Charges	92,932		92,932		$92,932		92,932		92,932
Capital Outlays	0		0		$0		0		0
Total - Construction	$999,200	$8,800	$1,008,000	$12,000	$1,020,000	$0	$1,020,000	$0	$1,020,000
001220 Sanitation									
Personnel	$1,497,491		1,497,491		$1,497,491		$1,497,491	-$15,000	$1,482,491
Supplies & Expenses	291,696		291,696	5,000	$296,696	-3,800	292,896	48,200	341,096
Other Services & Charges	941,950	100,000	1,041,950	5,000	$1,046,950	3,800	1,050,750	39,000	1,089,750
Capital Outlays	0		0	20,000	$20,000		20,000		20,000
Total - Sanitation	$2,731,137	$100,000	$2,831,137	$30,000	$2,861,137	$0	$2,861,137	$72,200	$2,933,337
001221 Street Cleaning									
Personnel	$86,154		$86,154		$86,154		$86,154		$86,154
Supplies & Expenses	19,200		19,200		$19,200		19,200		19,200
Other Services & Charges	2,600		2,600		$2,600		2,600		2,600
Capital Outlays	0		0		$0		0		0
Total - Street Cleaning	$107,954	$0	$107,954	$0	$107,954	$0	$107,954	$0	$107,954
001250 Health									

CITY OF HATTIESBURG, MS. - GENERAL FUND
Analysis of Revenue and Expenditure Budgets
Fiscal Year Ending September 30, 2018

	Original FY 2018 Budgets	November Amend'ts	Proposed Amended Budgets	April Amend'ts	Amended Budgets	Proposed May Amend'ts	Amended Budgets	Proposed August Amend'ts	Proposed Amended Budgets
Personnel	$589,486		$589,486		$589,486		$589,486		$589,486
Supplies & Expenses	167,550		167,550	-10,000	$157,550		157,550		157,550
Other Services & Charges	8,700		8,700		$8,700		8,700		8,700
Capital Outlays	0		0		$0		0		0
Total - Health	$765,736	$0	$765,736	-$10,000	$755,736	$0	$755,736	$0	$755,736
Recap - Public Services:									
Personnel	***$6,633,747***	***$0***	***$6,633,747***	***-$25,989***	***$6,607,758***	***$0***	***$6,607,758***	***-$16,800***	***$6,590,958***
Supplies & Expenses	***$1,466,376***	***8,800***	***1,475,176***	***47,000***	***$1,522,176***	***-84,737***	***1,437,439***	***71,900***	***1,509,339***
Other Services & Charges	***$4,052,463***	***162,000***	***4,214,463***	***-95,000***	***$4,119,463***	***43,800***	***4,163,263***	***461,100***	***4,624,363***
Capital Outlays	***$779,000***	***765,450***	***1,544,450***	***20,000***	***$1,564,450***	***0***	***1,564,450***	***-100,000***	***1,464,450***
Total - Public Services	***$12,931,586***	***$936,250***	***$13,867,836***	***-$53,989***	***$13,813,847***	***-$40,937***	***$13,772,910***	***$416,200***	***$14,189,110***
001260 Animal Control									
Personnel	$157,074		$157,074		$157,074		$157,074		$157,074
Supplies & Expenses	15,400		15,400		$15,400		15,400		15,400
Other Services & Charges	126,685	30,000	156,685		$156,685		156,685		156,685
Capital Outlays	0		0		$0		0		0
Total - Animal Control	$299,159	$30,000	$329,159	$0	$329,159	$0	$329,159	$0	$329,159
001280 Human/Social Assist.									
Personnel			$0		$0		$0		$0
Supplies & Expenses			0		$0		0		0
Other Services & Charges	239,880		239,880		$239,880		239,880		239,880
Capital Outlays			0		$0		0		0
Total - Human/Social Assist.	$239,880	$0	$239,880	$0	$239,880	$0	$239,880	$0	$239,880
001402 Economic Dev.									
Personnel			$0		$0		$0		$0
Supplies & Expenses			0		$0		0		0
Other Services & Charges	305,000		305,000		$305,000		305,000		305,000
Capital Outlays			0		$0		0		0
Total - Economic Dev.	$305,000	$0	$305,000	$0	$305,000		$305,000	$0	$305,000
001460 Debt Service									
Principal	$2,633,444		$2,633,444		$2,633,444		$2,633,444		$2,633,444
Interest	487,225		$487,225		$487,225		$487,225		$487,225
Paying Agent Fee	3,000		$3,000		$3,000		$3,000		$3,000
Total Debt Service	$3,123,669	$0	$3,123,669	$0	$3,123,669	$0	$3,123,669	$0	$3,123,669
001551 Airport									
Personnel	$82,260		$82,260		$82,260		$82,260		$82,260
Supplies & Expenses	38,200		38,200		$38,200		38,200		38,200
Other Services & Charges	85,958		85,958		$85,958	-10,000	75,958		75,958

CITY OF HATTIESBURG, MS. - GENERAL FUND
Analysis of Revenue and Expenditure Budgets
Fiscal Year Ending September 30, 2018

	Original FY 2018 Budgets	November Amend'ts	Proposed Amended Budgets	April Amend'ts	Amended Budgets	Proposed May Amend'ts	Amended Budgets	Proposed August Amend'ts	Proposed Amended Budgets
Capital Outlays	0		0		$0		0		0
Total - Airport	$206,418	$0	$206,418	$0	$206,418	-$10,000	$196,418	$0	$196,418
001553 Cemetery									
Personnel	$777,558		$777,558	$545	$778,103		$778,103		$778,103
Supplies & Expenses	84,950		84,950	8,000	$92,950		92,950		92,950
Other Services & Charges	61,351		61,351		$61,351		61,351		61,351
Capital Outlays	93,000		93,000	-8,000	$85,000		85,000		85,000
Total - Cemetery	$1,016,859	$0	$1,016,859	$545	$1,017,404	$0	$1,017,404	$0	$1,017,404
001560 Parking Garages									
Personnel	$238,330		$238,330		$238,330		$238,330		$238,330
Supplies & Expenses	8,850		8,850		$8,850		8,850		8,850
Other Services & Charges	70,350		70,350		$70,350		70,350		70,350
Capital Outlays	0		0		$0		0		0
Total - Parking Garages	$317,530	$0	$317,530	$0	$317,530	$0	$317,530	$0	$317,530
Transfers to Other Funds	$3,600,000	-200,000	$3,400,000		$3,400,000		$3,400,000		$3,400,000
EXPENDITURES & TRANSFERS	**$56,912,547**	**$1,785,064**	**$58,697,611**	**$23,000**	**$58,720,611**	**$3,000**	**$58,723,611**	**$547,000**	**$59,270,611**
Recap - General Fund									
Personnel	*$32,668,716*	*-$18,469*	*$32,650,247*	*-$13,462*	*$32,636,785*	*$0*	*$32,636,785*	*-$29,620*	*$32,607,165*
Supplies & Expenses	*3,092,922*	*49,630*	*3,142,552*	*77,000*	*3,219,552*	*-79,354*	*3,140,198*	*188,077*	*3,328,275*
Other Services & Charges	*12,617,168*	*204,975*	*12,822,143*	*-52,538*	*12,769,605*	*82,354*	*12,851,959*	*399,355*	*13,251,314*
Capital Outlays	*1,813,072*	*1,748,928*	*3,562,000*	*12,000*	*3,574,000*	*0*	*3,574,000*	*-10,812*	*3,563,188*
Principal Payments	*2,633,444*	*0*	*2,633,444*	*0*	*2,633,444*	*0*	*2,633,444*	*0*	*2,633,444*
Interest Payments	*487,225*	*0*	*487,225*	*0*	*487,225*	*0*	*487,225*	*0*	*487,225*
Total - Gen. Fund Cost Centers	*$53,312,547*	*$1,985,064*	*$55,297,611*	*$23,000*	*$55,320,611*	*$3,000*	*$55,323,611*	*$547,000*	*$55,870,611*
Transfers to Other Funds	*3,600,000*	*-200,000*	*3,400,000*	*0*	*3,400,000*	*0*	*3,400,000*	*0*	*3,400,000*
Total - Expenditures & Transfers	*$56,912,547*	*$1,785,064*	*$58,697,611*	*$23,000*	*$58,720,611*	*$3,000*	*$58,723,611*	*$547,000*	*$59,270,611*
Ending Cash Budget	**$3,022,167**	**-$841,755**	**$2,180,412**	**$0**	**$2,180,412**	**$0**	**$2,180,412**	**$28,795**	**$2,209,207**

CITY OF HATTIESBURG, MS
Analysis of Expenditure Budgets - Funds Other Than General
Fiscal Year Ending September 30, 2018

		Original FY 2018 Budgets	November Amend'ts	Proposed Amended Budgets	April Amend'ts	Amended Budgets	May Amend'ts	Proposed Amended Budgets	Proposed August Amend'ts	Proposed Amended Budgets
	Parks & Recreation (Fund #2):									
002300	Recreation Maint. Cost Center									
	Personnel	$1,368,895		$1,368,895	-$48,841	$1,320,054		$1,320,054	-$600	$1,319,454
	Supplies & Expenses	424,214		424,214		$424,214		424,214	12,000	436,214
	Other Services & Charges	617,862		617,862		$617,862		617,862	-11,400	606,462
	Capital Outlays	572,500		572,500		$572,500		572,500		572,500
	Total - Recreation Maint.	$2,983,471	$0	$2,983,471	-$48,841	$2,934,630	$0	$2,934,630	$0	$2,934,630
002315	Recreation Admin.									
	Personnel	$490,803		$490,803	$16,884	$507,687		$507,687		$507,687
	Supplies & Expenses	97,987		97,987		$97,987		97,987		97,987
	Other Services & Charges	468,402		468,402		$468,402		468,402		468,402
	Capital Outlays	0		0		$0		0		0
	Total - Recreation Admin.	$1,057,192	$0	$1,057,192	$16,884	$1,074,076	$0	$1,074,076	$0	$1,074,076
	Kamper Park Zoo									
	Personnel	$0		$0		$0		$0		$0
	Supplies & Expenses	0		0		$0		0		0
	Other Services & Charges	0		0		$0		0		0
	Capital Outlays	0		0		$0		0		0
	Total - Kamper Park	$0	$0	$0	$0	$0	$0	$0	$0	$0
	Recap - Parks & Recreation Fund:									
	Personnel	***$1,859,698***	***$0***	***$1,859,698***	***-$31,957***	$1,827,741	***$0***	***$1,827,741***	***-$600***	***$1,827,141***
	Supplies & Expenses	***522,201***	***0***	***522,201***	***0***	$522,201	***0***	***$522,201***	***12,000***	***534,201***
	Other Services & Charges	***1,086,264***	***0***	***1,086,264***	***0***	$1,086,264	***0***	***$1,086,264***	***-11,400***	***1,074,864***
	Capital Outlays	***572,500***	***0***	***572,500***	***0***	$572,500	***0***	***$572,500***	***0***	***572,500***
	Total - Recreation Maint.	***$4,040,663***	***$0***	***$4,040,663***	***-$31,957***	***$4,008,706***	***$0***	***$4,008,706***	***$0***	***$4,008,706***
	Municipal Fire Protection (Fund #5):									
	Personnel	$0		$0		$0		$0		$0
	Supplies & Expenses	69,742		69,742		$69,742	45,000	114,742		114,742
	Other Services & Charges	24,675		24,675		$24,675		24,675		24,675
	Capital Outlays	819,890	11,500	831,390		$831,390	-45,000	786,390		786,390
	Principal Payments	403,395		403,395		$403,395		403,395		403,395
	Interest Payments	8,390		8,390		$8,390		8,390		8,390
	Total - Municipal Fire Prot. Fund	***$1,326,092***	***$11,500***	***$1,337,592***	***$0***	***$1,337,592***	***$0***	***$1,337,592***	***$0***	***$1,337,592***
	Special Streets (Fund #8):									
	Personnel	$0		$0		$0		$0		$0
	Supplies & Expenses	0		0		$0		$0		0
	Other Services & Charges	75,500		75,500		$75,500		75,500	36,332	111,832
	Capital Outlays	0		0		$0		0		0

CITY OF HATTIESBURG, MS
Analysis of Expenditure Budgets - Funds Other Than General
Fiscal Year Ending September 30, 2018

		Original FY 2018 Budgets	November Amend'ts	Proposed Amended Budgets	April Amend'ts	Amended Budgets	May Amend'ts	Proposed Amended Budgets	Proposed August Amend'ts	Proposed Amended Budgets
	Total - Special Streets	***$75,500***	***$0***	***$75,500***	***$0***	***$75,500***	***$0***	***$75,500***	***$36,332***	***$111,832***
	Water & Sewer Operation & Maint. (Fund #9):									
009660	Customer Accounts Cost Center									
	Personnel	$474,215	$1,605	$475,820		$475,820		$475,820	-$600	$475,220
	Supplies & Expenses	37,596		37,596		$37,596		37,596	600	38,196
	Other Services & Charges	146,800		146,800		$146,800	135,000	281,800	20,000	301,800
	Capital Outlays	0		0		$0		0		0
	Total - Customer Accounts	$658,611	$1,605	$660,216	$0	$660,216	$135,000	$795,216	$20,000	$815,216
009672	Water Transmission Cost Center									
	Personnel	$835,797		$835,797		$835,797		$835,797	-$41,000	$794,797
	Supplies & Expenses	226,500		226,500		$226,500		226,500	30,000	256,500
	Other Services & Charges	1,052,515		1,052,515		$1,052,515		1,052,515	360,000	1,412,515
	Capital Outlays	0		0		$0		0		0
	Total - Water Trans.	$2,114,812	$0	$2,114,812	$0	$2,114,812	$0	$2,114,812	$349,000	$2,463,812
009673	Plant Cost Center									
	Personnel	$668,650		$668,650		$668,650		$668,650	-$1,960	$666,690
	Supplies & Expenses	157,900		157,900		$157,900		157,900	1,400	159,300
	Other Services & Charges	1,181,654	50,000	1,231,654	-25,000	$1,206,654		1,206,654	-40,000	1,166,654
	Capital Outlays	20,000	57,000	77,000		$77,000		77,000		77,000
	Total - Plant	$2,028,204	$107,000	$2,135,204	-$25,000	$2,110,204	$0	$2,110,204	-$40,560	$2,069,644
009676	Sewer Cost Center									
	Personnel	$694,422		$694,422		$694,422		$694,422	-$25,000	$669,422
	Supplies & Expenses	298,600	40,000	338,600	-25,000	$313,600		313,600		313,600
	Other Services & Charges	1,340,957		1,340,957	500,000	$1,840,957		1,840,957	265,000	2,105,957
	Capital Outlays	15,000		15,000	200,000	$215,000		215,000	-150,000	65,000
	Total - Sewer	$2,348,979	$40,000	$2,388,979	$675,000	$3,063,979	$0	$3,063,979	$90,000	$3,153,979
009677	Lagoon Cost Center									
	Personnel	$271,159		$271,159		$271,159		$271,159		$271,159
	Supplies & Expenses	374,100		374,100		$374,100		374,100		374,100
	Other Services & Charges	2,676,268		2,676,268		$2,676,268		2,676,268		2,676,268
	Capital Outlays	10,000		10,000		$10,000		10,000		10,000
	Principal Payments	0		0		$0		0		0
	Interest Payments	0		0		$0		0		0
	Total - Lagoon Cost Center	$3,331,527	$0	$3,331,527	$0	$3,331,527	$0	$3,331,527	$0	$3,331,527
	Recap: Water & Sewer O & M Fund:									
	Personnel	***$2,944,243***	***$1,605***	***$2,945,848***	***$0***	***$2,945,848***	***$0***	***$2,945,848***	***-$68,560***	***$2,877,288***
	Supplies & Expenses	***1,094,696***	***40,000***	***1,134,696***	***-25,000***	***$1,109,696***	***0***	***$1,109,696***	***32,000***	***$1,141,696***
	Other Services & Charges	***6,398,194***	***50,000***	***6,448,194***	***475,000***	***$6,923,194***	***135,000***	***$7,058,194***	***605,000***	***$7,663,194***

CITY OF HATTIESBURG, MS
Analysis of Expenditure Budgets - Funds Other Than General
Fiscal Year Ending September 30, 2018

	Original FY 2018 Budgets	November Amend'ts	Proposed Amended Budgets	April Amend'ts	Amended Budgets	May Amend'ts	Proposed Amended Budgets	Proposed August Amend'ts	Proposed Amended Budgets
Capital Outlays	*45,000*	*57,000*	*102,000*	*200,000*	*$302,000*	*0*	*$302,000*	*-150,000*	*$152,000*
Principal Payments	*0*	*0*	*0*	*0*	*$0*	*0*	*$0*	*0*	*$0*
Interest Payments	*0*	*0*	*0*	*0*	*$0*	*0*	*$0*	*0*	*$0*
Total - Water & Sewer O & M Fund	*$10,482,133*	*$148,605*	*$10,630,738*	*$650,000*	*$11,280,738*	*$135,000*	*$11,415,738*	*$418,440*	*$11,834,178*
Water & Sewer Bond & Int. (Fund #10):									
Principal Payments	$5,041,000		$5,041,000		$5,041,000		$5,041,000		$5,041,000
Interest Payments	$2,473,448		$2,473,448		$2,473,448		$2,473,448		$2,473,448
Paying Agent Fees	$15,000		$15,000		$15,000		$15,000		$15,000
Total - W & S Bond & Int. Fund	*$7,529,448*	*$0*	*$7,529,448*	*$0*	*$7,529,448*	*$0*	*$7,529,448*	*$0*	*$7,529,448*
Water & Sewer Revenue (Fund #11):									
Principal Payments	$96,000		$96,000		$96,000		$96,000		$96,000
Interest Payments	3,467		3,467		$3,467		3,467		3,467
Other services & charges	37,700		37,700	50,000	$87,700		87,700		87,700
Transfers to other funds	21,550,133		21,550,133	100,000	$21,650,133		21,650,133		21,650,133
Total - W & S Revenue Fund	*$21,687,300*	*$0*	*$21,687,300*	*$150,000*	*$21,837,300*	*$0*	*$21,837,300*	*$0*	*$21,837,300*
1999 Tax Increment (Walmart) Bond & Int (Fund #12):									
Principal Payments	$0		$0		$0		$0		$0
Interest Payments	0		0		$0		$0		0
Transfers	0	6,895	6,895		$6,895		$6,895	10	6,905
Paying Agent Fees	0		0		$0		$0		0
Total - 1999 TIF Bond & Int Fund	*$0*	*$6,895*	*$6,895*	*$0*	*$6,895*	*$0*	*$6,895*	*$10*	*$6,905*
City Bond & Interest (Fund #13):									
Principal Payments	$1,700,000		$1,700,000		$1,700,000		$1,700,000		$1,700,000
Interest Payments	223,350		223,350		$223,350		$223,350		223,350
Other Services & Charges	33,000		33,000		$33,000		$33,000		33,000
Paying Agent Fees	12,000		12,000		$12,000		$12,000		12,000
Total - 1999 TIF Bond & Int Fund	*$1,968,350*	*$0*	*$1,968,350*	*$0*	*$1,968,350*	*$0*	*$1,968,350*	*$0*	*$1,968,350*
USA Yeast Bond & Interest (Fund #15):									
Principal Payments	$0		$0		$0		$0		$0
Interest Payments	0		0		$0		0		0
Transfers Out	0	22	22		$22		22		22
other services & charges	0		0		$0		0		0
Total - 1999 TIF Bond & Int Fund	*$0*	*$22*	*$22*	*$0*	*$22*	*$0*	*$22*	*$0*	*$22*
Police Fines & Forfeitures (Fund #19):									
Personnel	$0		$0		$0		0		$0
Supplies & Expenses	41,441		41,441		$41,441	15,734	57,175		57,175
Other Services & Charges	6,600	10,000	16,600		$16,600	26,930	43,530		43,530

CITY OF HATTIESBURG, MS
Analysis of Expenditure Budgets - Funds Other Than General
Fiscal Year Ending September 30, 2018

	Original FY 2018 Budgets	November Amend'ts	Proposed Amended Budgets	April Amend'ts	Amended Budgets	May Amend'ts	Proposed Amended Budgets	Proposed August Amend'ts	Proposed Amended Budgets
Capital Outlays	258,917		258,917		$258,917	35,000	293,917		293,917
Transfers	0		0		$0		0		0
Total - Fines & Forf. Fund	***$306,958***	***$10,000***	***$316,958***	***$0***	***$316,958***	***$77,664***	***$394,622***	***$0***	***$394,622***
Series 2002 TIF Bond & Int (Southern Pointe, Fund #20):									
Principal Payments	$140,000		$140,000		$140,000		140,000		$140,000
Interest Payments	104,033		104,033		$104,033		104,033		104,033
other services & charges	2,000		2,000		$2,000		2,000		2,000
Total - 1999 TIF Bond & Int Fund	***$246,033***	***$0***	***$246,033***	***$0***	***$246,033***	***$0***	***$246,033***	***$0***	***$246,033***
Series 2004 TIF Bond & Int (Home Depot, Fund #21):									
Principal Payments	$0		$0		$0		$0		$0
Interest Payments	0		0		$0		0		0
Transfers	0	67,570	67,570		$67,570		67,570	480	68,050
other services & charges	0		0		$0		0		0
Total - 2004 TIF Bond & Int Fund	***$0***	***$67,570***	***$67,570***	***$0***	***$67,570***	***$0***	***$67,570***	***$480***	***$68,050***
Series 2003 TIF Bond & Int (Chauvet Sq., Fund #22):									
Principal Payments	$120,000		$120,000		$120,000		120,000		$120,000
Interest Payments	71,688		71,688		$71,688		71,688		71,688
other services & charges	2,000		2,000		$2,000		2,000		2,000
Transfers to other Funds	0		0		$0		0		0
Total - 2003 TIF Bond & Int Fund	***$193,688***	***$0***	***$193,688***	***$0***	***$193,688***	***$0***	***$193,688***	***$0***	***$193,688***
Series 2007 TIFBond & Int (Turtle Creek Fund 23):									
Principal Payments	375,000		375,000		$375,000		375,000		375,000
Interest Payments	76,441		76,441		$76,441		76,441		76,441
Other Services & Charges	3,500		3,500		$3,500		3,500		3,500
Total - 2007 TIF Bond & Int Fund	***$454,941***	***$0***	***$454,941***	***$0***	***$454,941***	***$0***	***$454,941***	***$0***	***$454,941***
Series 2008 TIF Bond & Int (Lincoln Center Fund 24):									
Principal Payments	$45,000		45,000		$45,000		45,000		45,000
Interest Payments	$11,600		11,600		$11,600		11,600		11,600
Other Services & Charges	$1,000		1,000		$1,000		1,000		1,000
Total - 2008 TIF Bond & Int Fund	***$57,600***	***$0***	***$57,600***	***$0***	***$57,600***	***$0***	***$57,600***	***$0***	***$57,600***
Series 2011 TIF Bond & Int (Turtle Creek Commons/Kohl's Fund 25):									
Principal Payments	$75,000		75,000		$75,000		75,000		75,000
Interest Payments	$16,000		16,000		$16,000		16,000		16,000
Other Services & Charges	$2,000		2,000		$2,000		2,000		2,000
Total - 2008 TIF Bond & Int Fund	***$93,000***	***$0***	***$93,000***	***$0***	***$93,000***	***$0***	***$93,000***	***$0***	***$93,000***

Series 22016 TIF Bond & Int (Whispering Pines Fund 26):

CITY OF HATTIESBURG, MS
Analysis of Expenditure Budgets - Funds Other Than General
Fiscal Year Ending September 30, 2018

	Original FY 2018 Budgets	November Amend'ts	Proposed Amended Budgets	April Amend'ts	Amended Budgets	May Amend'ts	Proposed Amended Budgets	Proposed August Amend'ts	Proposed Amended Budgets
Principal Payments	$156,000		156,000		$156,000		156,000		156,000
Interest Payments	$123,863		123,863		$123,863		123,863		123,863
Other Services & Charges	$1,300		1,300		$1,300		1,300		1,300
Total - 2008 TIF Bond & Int Fund	***$281,163***	***$0***	***$281,163***	***$0***	***$281,163***	***$0***	***$281,163***	***$0***	***$281,163***
Series 2016 TIF Bond & Int (Hburg Clinic Midtown Fund 28):									
Principal Payments	$44,000		44,000		$44,000		44,000		44,000
Interest Payments	$32,045		32,045		$32,045		32,045		32,045
Other Services & Charges			0		$0		0		0
Total - 2008 TIF Bond & Int Fund	***$76,045***	***$0***	***$76,045***	***$0***	***$76,045***	***$0***	***$76,045***	***$0***	***$76,045***
Airport Imp. (Fund #39):									
Personnel	$0		$0		$0		$0		$0
Supplies & Expenses	0		0		$0		0		0
Other Services & Charges	0		0		$0		0		0
Capital Outlays	1,016,850	342,378	1,359,228		$1,359,228		1,359,228		1,359,228
Total - Airport Imp. Fund	***$1,016,850***	***$342,378***	***$1,359,228***	***$0***	***$1,359,228***	***$0***	***$1,359,228***	***$0***	***$1,359,228***
Series 2015A TIF Bond & Int (The Ridge at Turtle Creek) (Fund #50)									
Principal Payments	57000		57,000		57,000		57,000		57,000
Interest Payments	62508		62,508	28,260	90,768		90,768		90,768
Paying Agent Fees	2000		2,000		2,000		2,000		2,000
Other Services & Charges	0		0		0		0		0
Total - 2007 G.O.Refunding	***$ 121,508***	***$ -***	***$ 121,508***	***$ 28,260***	***$ 149,768***	***$ -***	***$ 149,768***	***$ -***	***$ 149,768***
Series 2015B TIF Bond & Int (Midtown Market) (Fund #51)									
Principal Payments	10000		10,000		10,000		10,000		10,000
Interest Payments	10450		10,450	4,845	15,295		15,295	300	15,595
Paying Agent Fees	2000		2,000		2,000		2,000		2,000
Other Services & Charges			0		0		0		0
Total - 2007 G.O.Refunding	***$ 22,450***	***$ -***	***$ 22,450***	***$ 4,845***	***$ 27,295***	***$ -***	***$ 27,295***	***$ 300***	***$ 27,595***
Municipal Road & Bridge (Fund #72):									
Personnel	$0		$0		$0		$0		$0
Supplies & Expenses	0		0		$0		$0		0
Other Services & Charges	1,500,000		1,500,000	60,000	$1,560,000	50,000	$1,610,000		1,610,000
Capital Outlays	5,970,624	-404,933	5,565,691	97,878	$5,663,569	-50,000	$5,613,569		5,613,569
Principal	0		0		$0		$0		0
Interest	0		0		$0		$0		0
Total - Municipal Road & Bridge	***$7,470,624***	***-$404,933***	***$7,065,691***	***$157,878***	***$7,223,569***	***$0***	***$7,223,569***	***$0***	***$7,223,569***

CITY OF HATTIESBURG, MS
Analysis of Expenditure Budgets - Funds Other Than General
Fiscal Year Ending September 30, 2018

	Original FY 2018 Budgets	November Amend'ts	Proposed Amended Budgets	April Amend'ts	Amended Budgets	May Amend'ts	Proposed Amended Budgets	Proposed August Amend'ts	Proposed Amended Budgets
Mass Transit (Fund #73):									
Personnel	$765,705	$42,540	$808,245	$46,980	$855,225		$855,225		$855,225
Supplies & Expenses	196,400		196,400		$196,400		$196,400		196,400
Other Services & Charges	547,932		547,932	28,000	$575,932		$575,932	15,000	590,932
Capital Outlays	2,555,695	239,133	2,794,828		$2,794,828	320,631	$3,115,459		3,115,459
Total - Mass Transit Fund	***$4,065,732***	***$281,673***	***$4,347,405***	***$74,980***	***$4,422,385***	***$320,631***	***$4,743,016***	***$15,000***	***$4,758,016***
Water & Sewer Construction (Fund #75):									
Personnel	$0		$0		$0		$0		$0
Supplies & Expenses	0		0		$0		0		0
Other Services & Charges	1,500,000		1,500,000		$1,500,000		1,500,000		1,500,000
Transfers							0		0
Capital Outlays	3,217,000	350,000	3,567,000		$3,567,000	400,000	3,967,000		3,967,000
Total - W & S Construction Fund	***$4,717,000***	***$350,000***	***$5,067,000***	***$0***	***$5,067,000***	***$400,000***	***$5,467,000***	***$0***	***$5,467,000***
Community Centers (Fund #77):									
Personnel	$575,980		$575,980	$20,159	$596,139		596,139		$596,139
Supplies & Expenses	67,050		67,050		$67,050		67,050		67,050
Other Services & Charges	175,010		175,010		$175,010		175,010		175,010
Capital Outlays	124,750		124,750		$124,750		124,750		124,750
Total - Community Centers Fund	***$942,790***	***$0***	***$942,790***	***$20,159***	***$962,949***	***$0***	***$962,949***	***$0***	***$962,949***
Community Dev. Block Grant (Fund #82):									
Personnel	$173,105	$34,751	$207,856		$207,856		207,856		$207,856
Supplies & Expenses	5,750		5,750		$5,750		5,750		5,750
Other Services & Charges	101,792		101,792		$101,792		101,792		101,792
Capital Outlays	745,761	-163,547	582,214		$582,214		582,214		582,214
Transfers	0		0		$0		0		0
Total - CDBG Fund	***$1,026,408***	***-$128,796***	***$897,612***	***$0***	***$897,612***	***$0***	***$897,612***	***$0***	***$897,612***
Series 2009 G.O. Bonds - AMR Project (Fund #78)									
Supplies	$0		0		$0		0		0
Other Services & Charges	$0		0		$0		0		0
Transfers Out	$0		0		$0		0		0
Capital Outlay	0		0		$0		0		0
Total - Series 2009 G.O. Bonds	***$0***	***$0***	***$0***	***$0***	***$0***	***$0***	***$0***	***$0***	***$0***
Public Safety/Recreation Construction (Fund #88):									
Personnel	$0		$0		$0		$0		$0
Supplies & Expenses	0		0		$0		0		0
Other Services & Charges	0		0	580,891	$580,891		580,891		580,891
Capital Outlays	0	681,413	681,413	-580,891	$100,522		100,522		100,522
Transfers to other Funds	0		0		$0		0		0

CITY OF HATTIESBURG, MS
Analysis of Expenditure Budgets - Funds Other Than General
Fiscal Year Ending September 30, 2018

	Original FY 2018 Budgets	November Amend'ts	Proposed Amended Budgets	April Amend'ts	Amended Budgets	May Amend'ts	Proposed Amended Budgets	Proposed August Amend'ts	Proposed Amended Budgets
Total - Series 2002 Const. Fund	*$0*	*$681,413*	*$681,413*	*$0*	*$681,413*	*$0*	*$681,413*	*$0*	*$681,413*
MDA Energy Efficiency Capital Projects (Fund 89):									
Personnel	$0		$0		$0		0		$0
Supplies & Expenses	0		0		$0		0		0
Other Services & Charges	0		0		$0		0		0
Capital Outlays	560,284	45,524	605,808		$605,808		605,808		605,808
Transfers	0		0		$0		0		0
Total - Series 2004 Const. Fund	*$560,284*	*$45,524*	*$605,808*	*$0*	*$605,808*	*$0*	*$605,808*	*$0*	*$605,808*
Series 2008 G.O. Note (Downtown Lighting)(Fund # 90):									
Personnel	$0		$0		$0		$0		$0
Supplies & Expenses	0		0		$0		0		0
Other Services & Charges	0		0		$0		0		0
Capital Outlays			0		$0		0		0
Transfers	0		0		$0		0		0
Total - Series 2004 Const. Fund	*$0*	*$0*	*$0*	*$0*	*$0*	*$0*	*$0*	*$0*	*$0*
TIF Construction (Fund # 91):									
Personnel	$0		$0		$0		$0		$0
Supplies & Expenses	0		0		$0		0		0
Other Services & Charges	0		0		$0		0		0
Capital Outlays	0		0		$0		0		0
Transfers	0	207	207		$207		207	15	222
Total - Series 2004 Const. Fund	*$0*	*$207*	*$207*	*$0*	*$207*	*$0*	*$207*	*$15*	*$222*
Series 2001 G.O. Bond Construction (Fund # 95):									
Personnel	$0		$0		$0		$0		$0
Supplies & Expenses	0		0		$0		0		0
Other Services & Charges	0		0		$0		0		0
Capital Outlays	0		0		$0		0		0
Transfers	0	174	174		$174		174		174
Total - Series 2001 Const. Fund	*$0*	*$174*	*$174*	*$0*	*$174*	*$0*	*$174*	*$0*	*$174*
Mississippi Dev. Bank Construction (Fund # 96):									
Personnel	$0		$0		$0		$0		$0
Supplies & Expenses	0		0		$0		0		0
Other Services & Charges	0		0		$0		0		0
Transfers			0		$0		0		0
Capital Outlays	0		0		$0		0		0
Total - MDB Fund	*$0*	*$0*	*$0*	*$0*	*$0*	*$0*	*$0*	*$0*	*$0*

CITY OF HATTIESBURG, MS
Analysis of Expenditure Budgets - Funds Other Than General
Fiscal Year Ending September 30, 2018

	Original FY 2018 Budgets	November Amend'ts	Proposed Amended Budgets	April Amend'ts	Amended Budgets	May Amend'ts	Proposed Amended Budgets	Proposed August Amend'ts	Proposed Amended Budgets
Kamper Park Imp. (Fund #98):									
Personnel	$0		$0		$0		$0		$0
Supplies & Expenses	0		0		$0		0		0
Other Services & Charges	0		0		$0		0		0
Capital Outlays	2,247	1	2,248		$2,248		2,248		2,248
Total - Kamper Park Imp. Fund	***$2,247***	***$1***	***$2,248***	***$0***	***$2,248***	***$0***	***$2,248***	***$0***	***$2,248***
Series 2010 Water & Sewer G.O. Constr. (Fund #99):									
Personnel					$0				
Supplies & Expenses					$0				
Other Services & Charges			0		$0		0		0
Capital Outlay	$0		0		$0		0		0
Transfers out	$0		0		$0		$0		$0
Total - Series 2010 Constr.	***$0***	***$0***	***$0***	***$0***	***$0***	***$0***	***$0***	***$0***	***$0***
Series 2013 Water & Sewer Revenue Constr. (Fund #105):									
Personnel			0		$0		0		0
Supplies & Expenses			0		$0		0		0
Other Services & Charges	$0		0		$0		0		0
Capital Outlay	$400,000	-$48,834	351,166		$351,166		351,166		351,166
Transfers			0		$0		0		0
Total - Series 2013 Constr.	***$400,000***	***-$48,834***	***$351,166***	***$0***	***$351,166***	***$0***	***$351,166***	***$0***	***$351,166***
Series 2016 Water & Sewer Taxable Bonds Constr. (Fund #93):									
Personnel			0		$0		0		0
Supplies & Expenses			0		$0		0		0
Other Services & Charges	$1,000,000	-$364,857	635,143		$635,143		635,143		635,143
Capital Outlay	$23,447,000		23,447,000		$23,447,000		23,447,000		23,447,000
Transfers			0		$0		0		0
Total - Series 2016 Constr.	***$24,447,000***	***-$364,857***	***$24,082,143***	***$0***	***$24,082,143***	***$0***	***$24,082,143***	***$0***	***$24,082,143***
Series 2012 Water & Sewer Const. (Fund #94):									
Personnel	$0		$0		$0		$0		$0
Supplies & Expenses	0		0		$0		0		0
Other Services & Charges	0		0		$0		0		0
Capital Outlays	0		0		$0		0		0
Transfers Out	0	61	61		$61		61	5	66
Total - Series 2012 Const.	***$0***	***$61***	***$61***	***$0***	***$61***	***$0***	***$61***	***$5***	***$66***
GRAND TOTAL - FUNDS OTHER THAN THE GENERAL FUND	$93,611,807	$998,603	$94,610,410	$1,054,165	$95,664,575	$933,295	$96,597,870	$470,582	$97,068,452

CITY OF HATTIESBURG, MS
Analysis of Expenditure Budgets - Funds Other Than General
Fiscal Year Ending September 30, 2018

	Original FY 2018 Budgets	November Amend'ts	Proposed Amended Budgets	April Amend'ts	Amended Budgets	May Amend'ts	Proposed Amended Budgets	Proposed August Amend'ts	Proposed Amended Budgets
General Fund	$56,912,547	$1,785,064	$58,697,611	$23,000	$58,720,611	$3,000	$58,723,611	$547,000	$59,270,611
TOTAL EXPENDITURES & TRANSFERS	$150,524,354	$2,783,667	$153,308,021	$1,077,165	$154,385,186	$936,295	$155,321,481	$1,017,582	$156,339,063
Less: Interfund Transfers	-25,150,133	125,071	-25,025,062	-100,000	-25,125,062	0	-25,125,062	-510	-25,125,572
TOTAL EXPENDITURES	$125,374,221	$2,908,738	$128,282,959	$977,165	$129,260,124	$936,295	$130,196,419	$1,017,072	$131,213,491
Recap of City-Wide Expenditure Budgets:									
Personnel	*$38,987,447*	*$60,427*	*$39,047,874*	*$21,720*	*$39,069,594*	*$0*	*$39,069,594*	*-$98,780*	*$38,970,814*
Supplies & Expenses	*$5,090,202*	*$89,630*	*$5,179,832*	*$52,000*	*$5,231,832*	*-$18,620*	*$5,213,212*	*$232,077*	*$5,445,289*
Other Services & Charges	*$25,146,635*	*-$99,882*	*$25,046,753*	*$1,141,353*	*$26,188,106*	*$294,284*	*$26,482,390*	*$1,044,287*	*$27,526,677*
Capital Outlays	*$41,549,590*	*$2,858,563*	*$44,408,153*	*-$271,013*	*$44,137,140*	*$660,631*	*$44,797,771*	*-$160,812*	*$44,636,959*
Principal Payments	*10,895,839*	*0*	*10,895,839*	*0*	*10,895,839*	*0*	*10,895,839*	*0*	*10,895,839*
Interest Payments	*3,704,508*	*0*	*3,704,508*	*33,105*	*3,737,613*	*0*	*3,737,613*	*300*	*3,737,913*
Total Expenditure Budgets	*$125,374,221*	*$2,908,738*	*$128,282,959*	*$977,165*	*$129,260,124*	*$936,295*	*$130,196,419*	*$1,017,072*	*$131,213,491*

CITY OF HATTIESBURG, MISSISSIPPI
A MUNICIPALITY
BUDGET OF ESTIMATED REVENUES AND EXPENDITURES
For the Fiscal Year Ending September 30, 2018

GENERAL FUND:

REVENUES & BEG. CASH:	
Taxes - Other	$35,000
Licenses & Permits	4,520,900
Inter-governmental Revenues:	
Federal Grants	4,376,886
State Grants	268,299
State-Shared Revenues	23,155,166
County Shared Revenues	0
Charges for Services:	
Public safety	242,000
Streets	1,000
Sanitaiton	2,195,000
Misc.	0
Fines & Forfeits	1,238,000
Miscellaneous	324,400
Transfers-In	964,465
Non-Revenue Receipts	1,702,412
Total From All Sources Other Than taxation	39,023,528
Beginning Cash and Investment Balance	5,342,290
Amount to be Raised by Tax Levy	17,114,000
TOTAL FROM ALL SOURCES	**$61,479,818**

EXPENDITURES & ENDING CASH:

General Government:	
Personnel	4,744,318
Supplies & Expenses	313,622
Other services & Charges	5,339,758
Capital Outlays	897,438
Total - General Government	11,295,136
Police Dept.:	
Personnel	11,059,582
Supplies & Expenses	761,586
Other services & Charges	533,297
Capital Outlays	1,086,000
Total - Police Dept.	13,440,465
Police & Fire Training:	
Personnel	37,615
Supplies & Expenses	150,732
Other services & Charges	110,695
Capital Outlays	17,000
Total - Police & Fire Training	316,042
Fire Dept.:	
Personnel	8,035,588
Supplies & Expenses	403,496
Other services & Charges	282,277
Capital Outlays	13,300
Total - Fire Dept.	8,734,661
Land Development Administration:	
Personnel	646,537
Supplies & Expenses	34,100
Other services & Charges	152,700
Capital Outlays	0
Total - Land Dev. Admin.	833,337

Public Safety Contractual Services:	
Personnel	236,800
Other services & Charges	1,296,000
Total - Pub. Safety Cont. Serv.	1,532,800
Public Services:	
Personnel	6,590,958
Supplies & Expenses	1,509,339
Other services & Charges	4,624,363
Capital Outlays	1,464,450
Total - Public Services	14,189,110
Animal Control	
Personnel	157,074
Supplies & Expenses	15,400
Other services & Charges	156,685
Capital Outlays	0
Total - Animal Control	329,159
Human/Social	
Other services & Charges	239,880
Total - Human/Social	239,880
Economic Development	
Personnel	
Supplies & Expenses	
Other services & Charges	305,000
Capital Outlays	0
Total - Eco. Dev.	305,000
Debt Service:	
Prinicpal Payments	2,633,444
Interest Payments	487,225
Paying Agent Fee	3,000
Total - Debt service	3,123,669
Airport	
Personnel	82,260
Supplies & Expenses	38,200
Other services & Charges	75,958
Capital Outlays	0
Total - Airport	196,418
Cemetery	
Personnel	778,103
Supplies & Expenses	92,950
Other services & Charges	61,351
Capital Outlays	85,000
Total - Cemetery	1,017,404
Parking Garages	
Personnel	238,330
Supplies & Expenses	8,850
Other services & Charges	70,350
Capital Outlays	0
Total - Parking Garages	317,530
Operating Transfers Out	3,400,000
Total Expenditures & Transfers	**59,270,611**
Ending Cash Balance	**$2,209,207**
TOTAL EXPENDITURES AND ENDING CASH BALANCE	**$61,479,818**

CITY OF HATTIESBURG, MISSISSIPPI
A MUNICIPALITY
BUDGET OF ESTIMATED REVENUES AND EXPENDITURES
For the Fiscal Year Ending September 30, 2018

PARKS & RECREATION FUND:

REVENUES & BEG. CASH:

Inter-governmental Revenues:	
Federal Grants	$0
State Grants	0
County Shared Revenues	0
Misc. grants	0
Charges for Services:	
Culture & Recreation	33,660
Miscellaneous	25,700
Transfers-In	2,570,000
Non-Revenue Receipts	0
Total From All Sources Other Than taxation	2,629,360
Beginning Cash and Investment Balance	658,638
Amount to be Raised by Tax Levy	880,000
TOTAL FROM ALL SOURCES	**$4,167,998**

EXPENDITURES & ENDING CASH:

Culture & Recreation:	
Personnel	1,827,141
Supplies & Expenses	534,201
Other services & Charges	1,074,864
Capital Outlays	572,500
Total Expenditures	$4,008,706
Cash balance at End of Year	159,292
TOTAL EXPENDITURES AND ENDING CASH BALANCE	**$4,167,998**

CITY OF HATTIESBURG, MISSISSIPPI
A MUNICIPALITY
BUDGET OF ESTIMATED REVENUES AND EXPENDITURES
For the Fiscal Year Ending September 30, 2018

MUNICIPAL FIRE PROTECTION FUND:

REVENUES & BEG. CASH:

Inter-governmental Revenues:	
State-Shared Revenues	$257,000
Charges for Services	95,652
Fines & Forfeits	0
Miscellaneous	3,000
Transfers In	0
Non-Revenue Receipts	450,000
Total From All Sources Other Than taxation	805,652
Beginning Cash and Investment Balance	767,033
TOTAL FROM ALL SOURCES	**$1,572,685**

EXPENDITURES & ENDING CASH:

Public Safety:	
Personnel	$0
Supplies & Expenses	114,742
Other services & Charges	24,675
Capital Outlays	786,390
Lease Debt Service - Principal	403,395
Lease Debt Service - Interest	8,390
Total Expenditures	$1,337,592
Cash balance at End of Year	235,093
TOTAL EXPENDITURES AND ENDING CASH BALANCE	**$1,572,685**

CITY OF HATTIESBURG, MISSISSIPPI
A MUNICIPALITY
BUDGET OF ESTIMATED REVENUES AND EXPENDITURES
For the Fiscal Year Ending September 30, 2018

SPECIAL STREET
SPECIAL REVENUE FUND:

REVENUES & BEG. CASH:

Inter-governmental Revenues:	
Federal Grants	$0
State Shared Revenues	47,112
Misc. grants	0
Miscellaneous	500
Non-Revenue Receipts	0
Total From All Sources Other Than taxation	47,612
Beginning Cash and Investment Balance	68,062
TOTAL FROM ALL SOURCES	**$115,674**

EXPENDITURES & ENDING CASH:

Public Services:	
Supplies & Expenses	0
Other services & Charges	111,832
Capital Outlays	0
Total Expenditures	$111,832
Cash balance at End of Year	3,842
TOTAL EXPENDITURES AND ENDING CASH BALANCE	**$115,674**

CITY OF HATTIESBURG, MISSISSIPPI
A MUNICIPALITY
BUDGET OF ESTIMATED REVENUES AND EXPENDITURES
For the Fiscal Year Ending September 30, 2018

WATER & SEWER OPERATION AND MAINTENANCE FUND:

REVENUES & BEG. CASH:	
Charges for Services	$25,000
Transfers-In	10,450,000
Miscellaneous	4,200
Non-Revenue Receipts	57,000
Total From All Sources Other Than taxation	10,536,200
Beginning Cash and Investment Balance	1,319,283
TOTAL FROM ALL SOURCES	**$11,855,483**
EXPENDITURES & ENDING CASH:	
Personnel	2,877,288
Supplies & Expenses	1,141,696
Other services & Charges	7,663,194
Capital Outlays	152,000
Lease Debt Service - Principal	0
Lease Debt Service - Interest	0
Total Expenditures	$11,834,178
Cash balance at End of Year	21,305
TOTAL EXPENDITURES AND ENDING CASH BALANCE	**$11,855,483**

CITY OF HATTIESBURG, MISSISSIPPI
A MUNICIPALITY
BUDGET OF ESTIMATED REVENUES AND EXPENDITURES
For the Fiscal Year Ending September 30, 2018

WATER & SEWER BOND AND INTEREST FUND:

REVENUES & BEG. CASH:	
Transfers-In	$8,375,000
Miscellaneous	8,000
Non-Revenue Receipts	
Total Revenues	8,383,000
Beginning Cash Balance	11,216,815
TOTAL FROM ALL SOURCES	**$19,599,815**
EXPENDITURES & ENDING CASH:	
Bonds Redeemed	5,041,000
Interest on Bonds	2,473,448
Paying Agent Fees	15,000
Total Expenditures	**7,529,448**
Cash balance at End of Year	12,070,367
TOTAL EXPENDITURES AND ENDING CASH BALANCE	**$19,599,815**

CITY OF HATTIESBURG, MISSISSIPPI
A MUNICIPALITY
BUDGET OF ESTIMATED REVENUES AND EXPENDITURES
For the Fiscal Year Ending September 30, 2018

WATER & SEWER ENTERPRISE FUND:

REVENUES & BEG. CASH:

Charges for Services:	
Licenses, Permits & Fees	$4,000
Miscellaneous	3,500
Metered Water Sales	10,757,200
Taps	150,000
Water Turn-On Fees	50,000
Sewer Connections	40,000
Sewer Charges	10,832,600
Total Revenues	21,837,300
Beginning Fund Balance	0
TOTAL FROM ALL SOURCES	**$21,837,300**

EXPENDITURES & ENDING CASH:

Other Services & Charges	87,700
Principal Redeemed - Notes	96,000
Interest on Notes	3,467
Operating Transfers Out	21,650,133
Total Expenditures	**$21,837,300**
Cash balance at End of Year	**$0**
TOTAL EXPENDITURES AND ENDING CASH BALANCE	**$21,837,300**

CITY OF HATTIESBURG, MISSISSIPPI
A MUNICIPALITY
BUDGET OF ESTIMATED REVENUES AND EXPENDITURES
For the Fiscal Year Ending September 30, 2018

1999 TAX INCREMENT BOND & INTEREST FUND (DEBT SERVICE FUND):

REVENUES & BEG. CASH:	
Interest	$10
County-Shared Revenues	0
Total From All Sources Other Than taxation	10
Beginning Cash and Investment Balance	6,895
Amount to be Raised by Tax Levy	0
TOTAL FROM ALL SOURCES	**$6,905**
EXPENDITURES & ENDING CASH:	
General Issues:	
Bonds Redeemed	0
Interest on Bonds	0
Paying Agent Fees	0
Transfers Out	6,905
Other Services & Charges	0
Total Expenditures	$6,905
Cash balance at End of Year	0
TOTAL EXPENDITURES AND ENDING CASH BALANCE	**$6,905**

CITY OF HATTIESBURG, MISSISSIPPI
A MUNICIPALITY
BUDGET OF ESTIMATED REVENUES AND EXPENDITURES
For the Fiscal Year Ending September 30, 2018

CITY BOND & INTEREST FUND (DEBT SERVICE FUND):

REVENUES & BEG. CASH:	
County-Shared Revenues	$0
Interest	7,000
Non-Revenue receipts	214,100
Transfers-In	125,120
Total From All Sources Other Than taxation	346,220
Beginning Cash and Investment Balance	5,005,836
Amount to be Raised by Tax Levy	2,540,000
TOTAL FROM ALL SOURCES	**$7,892,056**
EXPENDITURES & ENDING CASH:	
General Issues:	
Bonds Redeemed	1,700,000
Interest on Bonds	223,350
Other Services & Charges	33,000
Paying Agent Fees	12,000
Total Expenditures	$1,968,350
Cash balance at End of Year	5,923,706
TOTAL EXPENDITURES AND ENDING CASH BALANCE	**$7,892,056**

CITY OF HATTIESBURG, MISSISSIPPI
A MUNICIPALITY
BUDGET OF ESTIMATED REVENUES AND EXPENDITURES
For the Fiscal Year Ending September 30, 2018

Water & Sewer Bond & Interest Fund (USA Yeast Project):

REVENUES & BEG. CASH:	
Interest	$0
Transfer from Other Funds	0
Total From All Sources Other Than taxation	0
Beginning Cash and Investment Balance	22
TOTAL FROM ALL SOURCES	**$22**
EXPENDITURES & ENDING CASH:	
General Issues:	
Bonds Redeemed	$0
Interest on Bonds	0
Transfers Out	22
Other Services & Charges	0
Total Expenditures	$22
Cash balance at End of Year	0
TOTAL EXPENDITURES AND ENDING CASH BALANCE	**$22**

CITY OF HATTIESBURG, MISSISSIPPI
A MUNICIPALITY
BUDGET OF ESTIMATED REVENUES AND EXPENDITURES
For the Fiscal Year Ending September 30, 2018

FINES & FORFEITURES FUND:

REVENUES & BEG. CASH:

State grants	
Charges for Services	1,800
Fines & Forfeits	75,742
Miscellaneous	122
Non-Revenue Receipts	0
Total From All Sources Other Than taxation	77,664
Beginning Cash and Investment Balance	354,826
TOTAL FROM ALL SOURCES	**$432,490**

EXPENDITURES & ENDING CASH:

Public Safety:	
Personnel	0
Supplies & Expenses	57,175
Other services & Charges	43,530
Capital Outlays	293,917
Transfers Out	0
Total Expenditures	$394,622
Cash balance at End of Year	37,868
TOTAL EXPENDITURES AND ENDING CASH BALANCE	**$432,490**

CITY OF HATTIESBURG, MISSISSIPPI
A MUNICIPALITY
BUDGET OF ESTIMATED REVENUES AND EXPENDITURES
For the Fiscal Year Ending September 30, 2018

SERIES 2002 TIF BOND & INTEREST FUND (Southern Pointe Project):

REVENUES & BEG. CASH:	
Interest	$0
Transfers In	$0
County-Shared Revenues	133,704
Total From All Sources Other Than taxation	133,704
Beginning Cash and Investment Balance	259,504
Amount to be Raised by Tax Levy	133,704
TOTAL FROM ALL SOURCES	**$526,912**
EXPENDITURES & ENDING CASH:	
General Issues:	
Bonds Redeemed	140,000
Interest on Bonds	104,033
Other Services & Charges	2,000
Total Expenditures	**$246,033**
Cash balance at End of Year	280,879
TOTAL EXPENDITURES AND ENDING CASH BALANCE	**$526,912**

CITY OF HATTIESBURG, MISSISSIPPI
A MUNICIPALITY
BUDGET OF ESTIMATED REVENUES AND EXPENDITURES
For the Fiscal Year Ending September 30, 2018

SERIES 2004 TIF BOND & INTEREST FUND (Home Depot Project):

REVENUES & BEG. CASH:	
Interest	$480
County-Shared Revenues	0
Transfer From Other Funds	0
Total From All Sources Other Than taxation	480
Beginning Cash and Investment Balance	67,570
Amount to be Raised by Tax Levy	0
TOTAL FROM ALL SOURCES	**$68,050**
EXPENDITURES & ENDING CASH:	
General Issues:	
Bonds Redeemed	0
Interest on Bonds	0
Transfers Out	68,050
Other Services & Charges	0
Total Expenditures	**$68,050**
Cash balance at End of Year	0
TOTAL EXPENDITURES AND ENDING CASH BALANCE	**$68,050**

CITY OF HATTIESBURG, MISSISSIPPI
A MUNICIPALITY
BUDGET OF ESTIMATED REVENUES AND EXPENDITURES
For the Fiscal Year Ending September 30, 2018

SERIES 2003 TIF BOND & INTEREST FUND (Chauvet Square Project):

REVENUES & BEG. CASH:	
Interest	$0
Transfer From Other Funds	0
Total From All Sources Other Than taxation	0
Beginning Cash and Investment Balance	194,568
Amount to be Raised by Tax Levy	282,127
TOTAL FROM ALL SOURCES	**$476,695**
EXPENDITURES & ENDING CASH:	
General Issues:	
Bonds Redeemed	120,000
Interest on Bonds	71,688
Other Services & Charges	2,000
Transfers to Other Funds	0
Total Expenditures	**$193,688**
Cash balance at End of Year	283,007
TOTAL EXPENDITURES AND ENDING CASH BALANCE	**$476,695**

CITY OF HATTIESBURG, MISSISSIPPI
A MUNICIPALITY
BUDGET OF ESTIMATED REVENUES AND EXPENDITURES
For the Fiscal Year Ending September 30, 2018

SERIES 2007 TIF BOND & INTEREST FUND (Turtle Creek):

REVENUES & BEG. CASH:	
Interest	$50
County Shared Revenue	$112,860
Transfer From Other Funds	
Total From All Sources Other Than taxation	112,910
Beginning Cash and Investment Balance	72,081
Amount to be Raised by Tax Levy	343,109
TOTAL FROM ALL SOURCES	**$528,100**
EXPENDITURES & ENDING CASH:	
General Issues:	
Bonds Redeemed	375,000
Interest on Bonds	76,441
Other Services & Charges	3,500
Total Expenditures	$454,941
Cash balance at End of Year	73,159
TOTAL EXPENDITURES AND ENDING CASH BALANCE	**$528,100**

CITY OF HATTIESBURG, MISSISSIPPI
A MUNICIPALITY
BUDGET OF ESTIMATED REVENUES AND EXPENDITURES
For the Fiscal Year Ending September 30, 2018

2008 TIF BOND AND INTEREST FUND
FUND (Lincoln Center):

REVENUES & BEG. CASH:	
Interest	$0
County Shared Revenue	$0
Transfer From Other Funds	0
Total From All Sources Other Than taxation	0
Beginning Cash and Investment Balance	122,564
Amount to be Raised by Tax Levy	0
TOTAL FROM ALL SOURCES	**$122,564**
EXPENDITURES & ENDING CASH:	
General Issues:	
Bonds Redeemed	45,000
Interest on Bonds	11,600
Other Services & Charges	1,000
Total Expenditures	$57,600
Cash balance at End of Year	64,964
TOTAL EXPENDITURES AND ENDING CASH BALANCE	**$122,564**

CITY OF HATTIESBURG, MISSISSIPPI
A MUNICIPALITY
BUDGET OF ESTIMATED REVENUES AND EXPENDITURES
For the Fiscal Year Ending September 30, 2018

2011 TIF BOND AND INTEREST FUND
FUND (Turtle Creek Crossing/Kohl's):

REVENUES & BEG. CASH:	
Interest	$0
County Shared Revenue	$31,850
Transfer From Other Funds	
Total From All Sources	
Other Than taxation	31,850
Beginning Cash and	
Investment Balance	15,698
Amount to be Raised by Tax Levy	64,530
TOTAL FROM ALL SOURCES	**$112,078**
EXPENDITURES & ENDING CASH:	
General Issues:	
Bonds Redeemed	75,000
Interest on Bonds	16,000
Other Services & Charges	2,000
Total Expenditures	$93,000
Cash balance at End of Year	19,078
TOTAL EXPENDITURES AND ENDING CASH BALANCE	**$112,078**

CITY OF HATTIESBURG, MISSISSIPPI
A MUNICIPALITY
BUDGET OF ESTIMATED REVENUES AND EXPENDITURES
For the Fiscal Year Ending September 30, 2018

2016 TIF BOND AND INTEREST FUND (Whispering Pines):

REVENUES & BEG. CASH:	
Interest	$0
County Shared Revenue	$183,260
Transfer From Other Funds	0
Total From All Sources Other Than taxation	183,260
Beginning Cash and Investment Balance	195,864
Amount to be Raised by Tax Levy	152,575
TOTAL FROM ALL SOURCES	**$531,699**
EXPENDITURES & ENDING CASH:	
General Issues:	
Bonds Redeemed	156,000
Interest on Bonds	123,863
Other Services & Charges	1,300
Total Expenditures	$281,163
Cash balance at End of Year	250,536
TOTAL EXPENDITURES AND ENDING CASH BALANCE	**$531,699**

CITY OF HATTIESBURG, MISSISSIPPI
A MUNICIPALITY
BUDGET OF ESTIMATED REVENUES AND EXPENDITURES
For the Fiscal Year Ending September 30, 2018

2016 TIF BOND AND INTEREST FUND
FUND (Hattiesburg Clinic Midtown):

REVENUES & BEG. CASH:	
Interest	$0
County Shared Revenue	$38,023
Transfer From Other Funds	0
Total From All Sources	
Other Than taxation	38,023
Beginning Cash and	
Investment Balance	89,948
Amount to be Raised by Tax Levy	38,023
TOTAL FROM ALL SOURCES	**$165,994**
EXPENDITURES & ENDING CASH:	
General Issues:	
Bonds Redeemed	44,000
Interest on Bonds	32,045
Other Services & Charges	0
Total Expenditures	$76,045
Cash balance at End of Year	89,949
TOTAL EXPENDITURES AND ENDING CASH BALANCE	**$165,994**

CITY OF HATTIESBURG, MISSISSIPPI
A MUNICIPALITY
BUDGET OF ESTIMATED REVENUES AND EXPENDITURES
For the Fiscal Year Ending September 30, 2018

AIRPORT IMPROVEMENT
SPECIAL REVENUE FUND:

REVENUES & BEG. CASH:	
Federal Grants	$1,834,761
State Shared Revenues	99,671
Miscellaneous	0
Transfers In	0
Non-Revenue Receipts	0
Total From All Sources Other Than taxation	1,934,432
Beginning Cash and Investment Balance	(575,204)
TOTAL FROM ALL SOURCES	**$1,359,228**
EXPENDITURES & ENDING CASH:	
Public Services:	
Other services & Charges	0
Capital Outlays	1,359,228
Total Expenditures	**$1,359,228**
Cash balance at End of Year	0
TOTAL EXPENDITURES AND ENDING CASH BALANCE	**$1,359,228**

CITY OF HATTIESBURG, MISSISSIPPI
A MUNICIPALITY
BUDGET OF ESTIMATED REVENUES AND EXPENDITURES
For the Fiscal Year Ending September 30, 2018

2015A TIF BOND AND INTEREST FUND
FUND (The Ridge at Turtle Creek):

REVENUES & BEG. CASH:	
Interest	$0
County Shared Revenue	$29,877
Transfer From Other Funds	0
Total From All Sources Other Than taxation	29,877
Beginning Cash and Investment Balance	101,182
Amount to be Raised by Tax Levy	117,891
TOTAL FROM ALL SOURCES	**$248,950**
EXPENDITURES & ENDING CASH:	
General Issues:	
Bonds Redeemed	57,000
Interest on Bonds	90,768
Other Services & Charges	2,000
Total Expenditures	$149,768
Cash balance at End of Year	99,182
TOTAL EXPENDITURES AND ENDING CASH BALANCE	**$248,950**

CITY OF HATTIESBURG, MISSISSIPPI
A MUNICIPALITY
BUDGET OF ESTIMATED REVENUES AND EXPENDITURES
For the Fiscal Year Ending September 30, 2018

2015B TIF BOND AND INTEREST FUND
FUND (Midtown Market):

REVENUES & BEG. CASH:	
Interest	$0
County Shared Revenue	$11,500
Transfer From Other Funds	0
Total From All Sources Other Than taxation	11,500
Beginning Cash and Investment Balance	9,933
Amount to be Raised by Tax Levy	16,345
TOTAL FROM ALL SOURCES	**$37,778**
EXPENDITURES & ENDING CASH:	
General Issues:	
Bonds Redeemed	10,000
Interest on Bonds	15,595
Other Services & Charges	2,000
Total Expenditures	$27,595
Cash balance at End of Year	10,183
TOTAL EXPENDITURES AND ENDING CASH BALANCE	**$37,778**

CITY OF HATTIESBURG, MISSISSIPPI
A MUNICIPALITY
BUDGET OF ESTIMATED REVENUES AND EXPENDITURES
For the Fiscal Year Ending September 30, 2018

MUNICIPAL ROAD & BRIDGE
SPECIAL REVENUE FUND:

REVENUES & BEG. CASH:

Inter-governmental Revenues:	
State Grants	$2,820,767
Federal Grants	450,000
County Shared Revenues	1,800,000
Miscellaneous	1,058,000
Non-Revenue Receipts	0
Total From All Sources Other Than taxation	6,128,767
Beginning Cash and Investment Balance	1,242,932
TOTAL FROM ALL SOURCES	**$7,371,699**

EXPENDITURES & ENDING CASH:

Public Services:	
Supplies & Expenses	0
Other services & Charges	1,610,000
Capital Outlays	5,613,569
Principal Payments	0
Interest Payments	0
Total Expenditures	**$7,223,569**
Cash balance at End of Year	148,130
TOTAL EXPENDITURES AND ENDING CASH BALANCE	**$7,371,699**

CITY OF HATTIESBURG, MISSISSIPPI
A MUNICIPALITY
BUDGET OF ESTIMATED REVENUES AND EXPENDITURES
For the Fiscal year Ending September 30, 2018

MASS TRANSIT OPERATING
SPECIAL REVENUE FUND:

REVENUES & BEG. CASH:

Inter-governmental Revenues:	
Federal Grants	$3,852,551
State Grants	$0
Miscellaneous	45,700
Transfers-In	230,000
Non-Revenue Reciepts	360,000
Total From All Sources Other Than taxation	4,488,251
Beginning Cash and Investment Balance	152,221
Amount to be Raised by Tax Levy	219,000
TOTAL FROM ALL SOURCES	**$4,859,472**

EXPENDITURES & ENDING CASH:

Personnel	855,225
Supplies & Expenses	196,400
Other services & Charges	590,932
Capital Outlays	3,115,459
Total Expenditures	$4,758,016
Cash balance at End of Year	101,456
TOTAL EXPENDITURES AND ENDING CASH BALANCE	**$4,859,472**

CITY OF HATTIESBURG, MISSISSIPPI
A MUNICIPALITY
BUDGET OF ESTIMATED REVENUES AND EXPENDITURES
For the Fiscal year Ending September 30, 2018

WATER & SEWER CONSTRUCTION FUND:

REVENUES & BEG. CASH:

Inter-governmental Revenues:	
Federal Grants	$500,000
Miscellaneous	269,000
Transfers-In	2,225,133
Non-Revenue Receipts	0
Total From All Sources Other Than taxation	2,994,133
Beginning Cash and Investment Balance	2,701,269
TOTAL FROM ALL SOURCES	**$5,695,402**

EXPENDITURES & ENDING CASH:

Other services & Charges	$1,500,000
Capital Outlays	3,967,000
Transfers	0
Total Expenditures	5,467,000
Cash balance at End of Year	228,402
TOTAL EXPENDITURES AND ENDING CASH BALANCE	**$5,695,402**

CITY OF HATTIESBURG, MISSISSIPPI
A MUNICIPALITY
BUDGET OF ESTIMATED REVENUES AND EXPENDITURES
For the Fiscal Year Ending September 30, 2018

COMMUNITY CENTERS
SPECIAL REVENUE FUND:

REVENUES & BEG. CASH:

Charges for services:	
Culture & Recreation	$13,700
Miscellaneous	600
Transfers-In	600,000
Non-Revenue Receipts	500
Total From All Sources Other Than taxation	614,800
Beginning Cash and Investment Balance	698,039
TOTAL FROM ALL SOURCES	**$1,312,839**

EXPENDITURES & ENDING CASH:

Personnel	596,139
Supplies & Expenses	67,050
Other services & Charges	175,010
Capital Outlays	124,750
Total Expenditures	**$962,949**
Cash balance at End of Year	349,890
TOTAL EXPENDITURES AND ENDING CASH BALANCE	**$1,312,839**

CITY OF HATTIESBURG, MISSISSIPPI
A MUNICIPALITY
BUDGET OF ESTIMATED REVENUES AND EXPENDITURES
For the Fiscal Year Ending September 30, 2018

COMMUNITY DEVELOPMENT BLOCK GRANT
SPECIAL REVENUE FUND:

REVENUES & BEG. CASH:

Federal Grants	$1,061,159
Transfers In	0
Total From All Sources Other Than taxation	1,061,159
Beginning Cash and Investment Balance	(163,547)
TOTAL FROM ALL SOURCES	**$897,612**

EXPENDITURES & ENDING CASH:

Personnel	207,856
Supplies & Expenses	5,750
Other services & Charges	101,792
Capital Outlays	582,214
Transfers	0
Total Expenditures	$897,612
Cash balance at End of Year	0
TOTAL EXPENDITURES AND ENDING CASH BALANCE	**$897,612**

CITY OF HATTIESBURG, MISSISSIPPI
A MUNICIPALITY
BUDGET OF ESTIMATED REVENUES AND EXPENDITURES
For the Fiscal Year Ending September 30, 2018

Public Safety Complex/Recreation Construction Fund:

REVENUES & BEG. CASH:	
Proceeds from Bond Issue	0
Interest Earnings	
Total Revenues	0
Beginning Cash and Investment Balance	681,413
TOTAL FROM ALL SOURCES	**$681,413**
EXPENDITURES & ENDING CASH:	
Other services & Charges	580,891
Capital Outlays	100,522
Transfers to Other Funds	0
Total Expenditures	$681,413
Cash balance at End of Year	0
TOTAL EXPENDITURES AND ENDING CASH BALANCE	**$681,413**

CITY OF HATTIESBURG, MISSISSIPPI
A MUNICIPALITY
BUDGET OF ESTIMATED REVENUES AND EXPENDITURES
For the Fiscal Year Ending September 30, 2018

MDA Energy Efficiency Capital Projects Fund:

REVENUES & BEG. CASH:	
Proceeds from Bond Issue	$0
Interest Earnings	0
Total Revenues	0
Beginning Cash and Investment Balance	605,808
TOTAL FROM ALL SOURCES	**$605,808**
EXPENDITURES & ENDING CASH:	
Other services & Charges	0
Capital Outlays	605,808
Transfers to Other Funds	0
Total Expenditures	$605,808
Cash Balance at End of Year	0
TOTAL EXPENDITURES AND ENDING CASH BALANCE	**$605,808**

CITY OF HATTIESBURG, MISSISSIPPI
A MUNICIPALITY
BUDGET OF ESTIMATED REVENUES AND EXPENDITURES
For the Fiscal Year Ending September 30, 2018

TIF Construction Fund:

REVENUES & BEG. CASH:	
Proceeds from Bond Issue	$0
Interest Earnings	15
Total Revenues	15
Beginning Cash and Investment Balance	207
TOTAL FROM ALL SOURCES	**$222**
EXPENDITURES & ENDING CASH:	
Other services & Charges	0
Capital Outlays	0
Transfers to Other Funds	222
Total Expenditures	$222
Cash Balance at End of Year	0
TOTAL EXPENDITURES AND ENDING CASH BALANCE	**$222**

CITY OF HATTIESBURG, MISSISSIPPI
A MUNICIPALITY
BUDGET OF ESTIMATED REVENUES AND EXPENDITURES
For the Fiscal Year Ending September 30, 2018

SERIES 2016 WATER & SEWER REVENUE BOND
CONSTRUCTION FUND:

REVENUES & BEG. CASH:	
Interest Earnings	0
Proceeds from Revenue Bond Issue	$0
Total Revenues	0
Beginning Cash and Investment Balance	24,082,143
TOTAL FROM ALL SOURCES	**$24,082,143**
EXPENDITURES & ENDING CASH:	
Other services & Charges	635,143
Capital Outlays	23,447,000
Transfers Out	
Total Expenditures	$24,082,143
Cash balance at End of Year	0
TOTAL EXPENDITURES AND ENDING CASH BALANCE	**$24,082,143**

CITY OF HATTIESBURG, MISSISSIPPI
A MUNICIPALITY
BUDGET OF ESTIMATED REVENUES AND EXPENDITURES
For the Fiscal Year Ending September 30, 2018

SERIES 2012 WATER & SEWER REVENUE BOND
CONSTRUCTION FUND:

REVENUES & BEG. CASH:	
Interest Earnings	5
Proceeds from Revenue Bond Issue	
Total Revenues	5
Beginning Cash and Investment Balance	61
TOTAL FROM ALL SOURCES	**$66**
EXPENDITURES & ENDING CASH:	
Other services & Charges	
Capital Outlays	0
Transfers Out	66
Total Expenditures	$66
Cash balance at End of Year	0
TOTAL EXPENDITURES AND ENDING CASH BALANCE	**$66**

CITY OF HATTIESBURG, MISSISSIPPI
A MUNICIPALITY
BUDGET OF ESTIMATED REVENUES AND EXPENDITURES
For the Fiscal Year Ending September 30, 2018

SERIES 2001 BOND CONSTRUCTION FUND:

REVENUES & BEG. CASH:

Interest Earnings	$0
Grant Revenues - State of MS	0
Transfers In	0
Proceeds from General Obligation Bond Issue	0
Total Revenues	0
Beginning Cash and Investment Balance	174
TOTAL FROM ALL SOURCES	**$174**

EXPENDITURES & ENDING CASH:

Other services & Charges	0
Capital Outlays	0
Transfers Out	174
Total Expenditures	**$174**
Cash balance at End of Year	0
TOTAL EXPENDITURES AND ENDING CASH BALANCE	**$174**

CITY OF HATTIESBURG, MISSISSIPPI
A MUNICIPALITY
BUDGET OF ESTIMATED REVENUES AND EXPENDITURES
For the Fiscal Year Ending September 30, 2018

KAMPER PARK ZOO CAPITAL
IMPROVEMENTS FUND:

REVENUES & BEG. CASH:	
State Grants	$0
Miscellaneous	0
Charges for Services	0
Transfers-In from Other Funds	0
Non-Revenue Receipts	0
Total Revenues	0
Beginning Cash and Investment Balance	2,248
TOTAL FROM ALL SOURCES	**$2,248**
EXPENDITURES & ENDING CASH:	
Supplies	0
Other services & Charges	0
Capital Outlays	2,248
Total Expenditures	$2,248
Cash balance at End of Year	0
TOTAL EXPENDITURES AND ENDING CASH BALANCE	**$2,248**

CITY OF HATTIESBURG, MISSISSIPPI
A MUNICIPALITY
BUDGET OF ESTIMATED REVENUES AND EXPENDITURES
For the Fiscal Year Ending September 30, 2018

SERIES 2013 WATER & SEWER REVENUE BOND
CONSTRUCTION FUND:

REVENUES & BEG. CASH:	
Interest Earnings	0
Proceeds from Revenue Bond Issue	$0
Total Revenues	0
Beginning Cash and Investment Balance	351,166
TOTAL FROM ALL SOURCES	**$351,166**
EXPENDITURES & ENDING CASH:	
Other services & Charges	0
Capital Outlays	351,166
Transfers Out	0
Total Expenditures	$351,166
Cash balance at End of Year	0
TOTAL EXPENDITURES AND ENDING CASH BALANCE	**$351,166**

There came on for consideration at a duly constituted meeting of the Mayor and Members of the City Council of the City of Hattiesburg, Mississippi, held on the 7th day of **August, 2018**, the following Resolution:

RESOLUTION 2018-100

WHEREAS, the Mayor and City Council of the City of Hattiesburg, Mississippi, have determined that expenditures within the City will exceed the original budget appropriation; and

WHEREAS, the additional appropriation needed is in excess of ten percent (10%) of the original appropriation, and in accordance with Section 21-35-25 of the Mississippi Code of 1972, as amended, shall be published;

NOW, THEREFORE, BE IT RESOLVED BY THE COUNCIL OF THE CITY OF HATTIESBURG:

Section 1. That the following budget amendments are hereby authorized to be made in the City's General Fund General Government Capital Outlay Unappropriated Fund Balance:

ORIGINAL BALANCE	CUMULATIVE AMENDMENTS	AMENDED BUDGET	DESCRIPTION OF ITEMS NOT PREVIOUSLY LISTED
$348,250	$549,188	$897,438	Demolition of church; hazard mitigation grant for purchase of bldg. in flood plain

Section 2. That the following budget amendments are hereby authorized to be made in the City's General Fund Police & Fire Training Capital Outlay Unappropriated Fund Balance:

ORIGINAL BALANCE	CUMULATIVE AMENDMENTS	AMENDED BUDGET	DESCRIPTION OF ITEMS NOT PREVIOUSLY LISTED
$-0-	$ 17,000	$17,000	Increase budget for grant and donation

Section 3. That the following budget amendments are hereby authorized to be made in the City's General Fund Fire Supplies Unappropriated Fund Balance:

ORIGINAL BALANCE	CUMULATIVE AMENDMENTS	AMENDED BUDGET	DESCRIPTION OF ITEMS NOT PREVIOUSLY LISTED
$314,913	$88,583	$403,496	Increase budget for fuel costs and vehicle repairs

Section 4. That the following budget amendments are hereby authorized to be made in the City's General Fund Code Enforcement Supplies Unappropriated Fund Balance:

ORIGINAL BALANCE	CUMULATIVE AMENDMENTS	AMENDED BUDGET	DESCRIPTION OF ITEMS NOT PREVIOUSLY LISTED
$28,100	$6,000	$34,100	Increase budgets for office supplies and vehicle repair parts

Section 5. That the following budget amendments are hereby authorized to be made in the City's General Fund Public Services Other Services & Charges Unappropriated Fund Balance:

ORIGINAL BALANCE	CUMULATIVE AMENDMENTS	AMENDED BUDGET	DESCRIPTION OF ITEMS NOT PREVIOUSLY LISTED
$4,052,463	$571,900	$4,624,363	Increase budget for engineering services, street repairs, and refuse disposal costs

Section 6. That the following budget amendments are hereby authorized to be made in the City's Special Street Improvements Fund Other Services & Charges Unappropriated Fund Balance:

ORIGINAL BALANCE	CUMULATIVE AMENDMENTS	AMENDED BUDGET	DESCRIPTION OF ITEMS NOT PREVIOUSLY LISTED
$75,500	$36,332	$111,832	Adjust budget for street repairs

Section 7. That the following budget amendments are hereby authorized to be made in the City's Water & Sewer Operation & Maintenance Fund Other Services & Charges Unappropriated Fund Balance:

ORIGINAL BALANCE	CUMULATIVE AMENDMENTS	AMENDED BUDGET	DESCRIPTION OF ITEMS NOT PREVIOUSLY LISTED
$6,398,194	$1,265,000	$7,663,194	Adjust budget for water & sewer line repairs; fee for collection of unrealized utility revenue; audit costs

Section 8. That public interest and necessity requiring same, this resolution shall become effective immediately from and after passage, but nevertheless to be published according to law.

The above and foregoing Resolution, after having been first reduced to writing, was introduced by Council Vice President Dryden, seconded by Council Member George, and was adopted by the following, to wit;

YEAS:	**NAYS:**	**ABSENT:**
George	**None**	**None**
Delgado		
Carroll		
Dryden		
Brown		

The President thereby declared the motion carried and the Resolution adopted, this the **7th** day of **August, 2018**.

(SEAL)

ATTEST:

CLERK OF COUNCIL

ADOPTED:

PRESIDENT OF COUNCIL

The above and foregoing Resolution having been submitted to and approved by the Mayor, this the **7th** day of **August, 2018**.

ATTEST:

CITY CLERK

APPROVED:

MAYOR

City of Hattiesburg, MS

200 Forrest St.
P.O. Box 1898
Hattiesburg, MS 39401

Master

File Number: 2018-543

File ID:	2018-543	**Type:**	Resolution	**Status:**	Passed
Version:	1	**Reference:**		**In Control:**	City Council
Requester:				**File Created:**	07/30/2018
Brief Title:	Adopt Resolution authorizing and approving defeasance of the Taxable General Obligation Bonds, Series 2010			**Final Action:**	08/07/2018
				Minute Book Number:	MB 2018-191

Title: Adopt Resolution authorizing and approving defeasance of the Taxable General Obligation Refunding Bonds, Series 2010, dated July 15, 2010, in the amount of $2,560,000; authorize and approve Escrow Agreement; authorize and approve Contribution of Funds Agreement; authorize Mayor to execute said Agreements

Notes:			
		Agenda Date:	08/07/2018
Indexes:		**Agenda Number:**	VI.-3
Sponsors:		**Enactment Date:**	
Attachments:	Resolution Series 2010 Bonds Defeasance, Executed - Res#2018-101 Resolution Series 2010 Bonds Defeasance	**Enactment Number:**	
Contact:		**Meeting Date:**	08/07/2018
Drafter:		**Effective Date:**	

History of Legislative File

Version:	Acting Body:	Date:	Action:	Sent To:	Due Date:	Return Date:	Result:
1	City Council	08/07/2018	Adopt				Pass

Action Text: A MOTION was made by Council Member Delgado and seconded by Council Member George to Adopt Resolution (#2018-101) authorizing and approving defeasance of the Taxable General Obligation Refunding Bonds, Series 2010, dated July 15, 2010, in the amount of $2,560,000; authorize and approve Escrow Agreement; authorize and approve Contribution of Funds Agreement; authorize Mayor to execute said Agreements

There being no discussion, the Motion received the affirmative vote of the Council as follows:

Yeas: 5 - George, Delgado, Carroll, Dryden and Brown

Nays: 0

Yea: 5 Council Member George
Council Member Delgado
Council President Carroll
Council Vice President Dryden
Council Member Brown

Text of Legislative File 2018-543

Title

Adopt Resolution authorizing and approving defeasance of the Taxable General Obligation Refunding Bonds, Series 2010, dated July 15, 2010, in the amount of $2,560,000; authorize and approve Escrow Agreement; authorize and approve Contribution of Funds Agreement; authorize Mayor to execute said Agreements

Summary

Resolution authorizing and approving bond defeasance.

Budget Information

Expenditure Type

Purchasing Item

Publication Information

There came on for consideration the matter of providing prepaying certain outstanding obligations of the City of Hattiesburg, Mississippi, and after a discussion of the subject matter, Council Member _____ offered and moved the adoption of the following resolution:

RESOLUTION (I) AUTHORIZING AND APPROVING THE DEFEASANCE OF CERTAIN OUTSTANDING TAXABLE GENERAL OBLIGATION REFUNDING BONDS OF THE CITY OF HATTIESBURG, MISSISSIPPI, AS DESCRIBED HEREIN; (II) AUTHORIZING AND APPROVING THE FORM OF AND EXECUTION OF AN ESCROW AGREEMENT (THE "ESCROW AGREEMENT"); (III) APPROVING THE SELECTION OF HANCOCK WHITNEY BANK, JACKSON, MISSISSIPPI, AS ESCROW AGENT UNDER THE TERMS AND PROVISIONS OF THE ESCROW AGREEMENT; (IV) AUTHORIZING AND APPROVING THE FORM OF A CONTRIBUTION OF FUNDS AGREEMENT WITH SACRED HEART CATHOLIC PARISH; AND (V) AUTHORIZING AND RATIFYING PURCHASING OF CERTAIN OPEN MARKET SECURITIES OR THE INITIAL AND FINAL APPLICATIONS TO DEPARTMENT OF THE TREASURY, BUREAU OF PUBLIC DEBT, DIVISION OF SPECIAL INVESTMENTS, PARKERSBURG, WEST VIRGINIA FOR UNITED STATES TREASURY SECURITIES - STATE AND LOCAL GOVERNMENT SERIES IN CONNECTION WITH THE REQUIREMENTS OF THE ESCROW AGREEMENT; (VI) AND FOR RELATED PURPOSES.

WHEREAS, on December 22, 2008, the City of Hattiesburg (the "**City**"), entered into a loan with the Mississippi Development Bank (the "**2008 Loan**") which provided funds to erect and purchase municipal buildings in the City, and purchase land therefor, and repair, improve, adorn and equip same, and for other authorized purposes under Mississippi Code of 1972, Section 31-25-1 *et seq.,* as amended and supplemented from time to time (the "**Original Project**"); and

WHEREAS, on July 15, 2010, the City issued its $2,560,000 Taxable General Obligation Refunding Bonds, Series 2010, dated July 15, 2010 (the "**2010 Bonds**"), the proceeds of which were used to refinance the 2008 Loan, and there remains outstanding $1,810,000 in aggregate principal amount of 2010 Bonds; and

WHEREAS, the 2010 Bonds were issued pursuant to a resolution of the City Council of the City adopted June 8, 2010, as amended July 6, 2010 (the "**2010 Bond Resolution**"); and

WHEREAS, on June 8, 2010, the City entered into a Purchase and Sales Agreement with Sacred Heart Catholic Parish ("**Sacred Heart**") pursuant to which Sacred Heart makes payments to the City for use and purchase of the Original Project; and

WHEREAS, Sacred Heart has informed the City that Sacred Heart has earned and maintains on deposit an amount of cash necessary to prepay the outstanding 2010 Bonds; and

WHEREAS, the City has determined to prepay the 2010 Bonds using funds provided from Sacred Heart in the form of the Sacred Heart Defeasance Funds (as defined below); and

WHEREAS, the City now desires, pursuant to the authority provided under the 2010 Resolution, to prepay the outstanding 2010 Bonds in whole, and by this resolution is authorizing such prepayment and the preparation and distribution of a notice to Hancock Whitney Bank, Jackson, Mississippi, as paying agent for the 2010 Bonds under the 2010 Bond Resolution (in such capacity, the "**2010 Paying Agent**") (the "**City Defeasance/Redemption Notice**"), a copy of which is attached hereto as **EXHIBIT A,** providing for (i) the defeasance of all outstanding maturities of the 2010 Bonds maturing July 1 in the years 2019 through 2030, both inclusive (the "**Defeased 2010 Bonds**"), with the funds to be provided from the City (the "**City Defeasance Funds**"), and (ii) the optional redemption of such portion of the Defeased 2010 Bonds maturing July 1 in the years 2021 through 2030, both inclusive (the "**Callable 2010 Bonds**"), on July 1, 2020, at par; and

WHEREAS, as part of the transaction to provide for the defeasance of the Defeased 2010 Bonds and the redemption of the Callable 2010 Bonds, the City desires to enter into and to approve the form of and the execution of an Agreement to Contribute Funds (the "**Sacred Heart Contribution Agreement**") with Sacred Heart, wherein Sacred Heart agrees to reimburse the City for all of any expended City Defeasance Funds and whereby Sacred Heart agrees to pay to the City an amount of cash equal to at least the amount necessary to (i) fund the amounts required by the Escrow Agreement (defined below) to provide funds for the defeasance of the Defeased 2010 Bonds and the redemption of the Callable 2010 Bonds on July 1, 2020, and (ii) pay for the costs of such transaction (such total amount of cash from Sacred Heart being the "**Sacred Heart Defeasance Funds**"); and

WHEREAS, to accomplish the defeasance of the Defeased 2010 Bonds, the City further desires (i) to approve the form of and execution of the Escrow Agreement (the "**Escrow Agreement**"), by and between the City and Hancock Whitney Bank, Jackson, Mississippi, as escrow agent (in such capacity, the "**Escrow Agent**"), regarding the defeasance of the Defeased 2010 Bonds, and (ii) to appoint Hancock Whitney Bank, Jackson, Mississippi, as Escrow Agent, under the terms and provisions of the Escrow Agreement; and

WHEREAS, the City has determined that it is in the best interest of the City to deposit in trust with the Escrow Agent the City Defeasance Funds to effect the prepayment of the Defeased 2010 Bonds, which City Defeasance Funds will be sufficient to effectuate the defeasance of the Defeased 2010 Bonds and the optional redemption of the Callable 2010 Bonds on July 1, 2020, at par; and

WHEREAS, pursuant to the terms of the Sacred Heart Contribution Agreement, subject to the City's verification of the City's receipt of the lawfully available Sacred Heart Defeasance Funds under the Sacred Heart Contribution Agreement, the City agrees therein to and shall use the City Defeasance Funds to provide a payment to the Escrow Agent of all necessary cash requirements of the Escrow Agreement and will use all reasonable efforts to undertake the

establishment of the Escrow Agreement and completion of the defeasance of the Defeased 2010 Bonds; provided, however, that the City will not pay any City Defeasance Funds for such defeasance to the Escrow Agent until such time as Sacred Heart has complied with the prerequisites set forth in the Sacred Heart Contribution Agreement, including the City's prior receipt of the Sacred Heart Defeasance Funds; and

WHEREAS, the City, under the terms and conditions of the Escrow Agreement, wishes to authorize each of the Structuring Agent (as defined below), or the Escrow Agent to make the initial application and final application to the Department of the Treasury, Bureau of Public Debt, Division of Special Investments, Parkersburg, West Virginia for United States Treasury Securities - State and Local Government Series (the "**SLGS**") to make provisions for the investment of funds as required under the Escrow Agreement; provided, however, that in the event the purchase of SLGS is unavailable or the purchase of open market securities is more beneficial to the City, the City also wishes to authorize the purchase of open market securities in connection with the investment requirements under the terms and conditions of the Escrow Agreement, as further provided herein.

NOW, THEREFORE, BE IT RESOLVED, DETERMINED AND ORDERED BY THE MAYOR AND CITY COUNCIL OF THE CITY, ACTING FOR AND ON BEHALF OF THE CITY, AS FOLLOWS:

SECTION 1. The Mayor and City Council (the "**Governing Body**") of the City, acting for and on behalf of the City, hereby authorize the defeasance of the Defeased 2010 Bonds by causing the prepayment of the Defeased 2010 Bonds with the City Defeasance Funds to the Escrow Agent under the Escrow Agreement, which prepayment proceeds for the Defeased 2010 Bonds with the City Defeasance Funds will be sufficient to effectuate the defeasance of the Defeased 2010 Bonds and the optional redemption of the Callable 2010 Bonds on July 1, 2020.

SECTION 2. Notwithstanding any provisions of Section 1 of this resolution, in accordance with the terms of the Sacred Heart Contribution Agreement, the City will not provide for the payment of any of the City Defeasance Funds to the Escrow Agent until the City has received all of the Sacred Heart Defeasance Funds and Sacred Heart otherwise performs any other obligations it may have under the Sacred Heart Contribution Agreement to the City's satisfaction.

SECTION 3. The Governing Body, acting for and on behalf of the City, hereby approves the form of and execution of the Sacred Heart Contribution Agreement, the form of which is attached hereto as **EXHIBIT B**. The Mayor of the City (the "**Mayor**"), the President of the City Council of the City (the "**President**"), the City Clerk of the City (the "**City Clerk**") and the City's Chief Financial Officer (the "**CFO**") are hereby authorized and directed to execute and deliver the Sacred Heart Contribution Agreement with such changes, insertions and omissions as may be approved by any such officer, said execution being conclusive evidence of such approval.

SECTION 4. The Governing Body, acting for and on behalf of the City, hereby approves the form of and execution of the Escrow Agreement, the form of which is attached hereto as **EXHIBIT C**. The Mayor, the President, the CFO and the City Clerk are hereby authorized and directed to execute and deliver the Escrow Agreement with such changes, insertions and omissions as may be approved by any such officer, said execution being conclusive evidence of such approval.

SECTION 5. The Governing Body hereby authorizes each of the Structuring Agent and the Escrow Agent to make the initial application and the final application with the Department of the Treasury, Bureau of Public Debt, Division of Special Investments, Parkersburg, West Virginia for SLGS in connection with the investment requirements under the terms and conditions of the Escrow Agreement.

SECTION 6. In the event the purchase of SLGS is unavailable or the purchase of open market securities is more beneficial to the City, the Governing Body hereby authorizes the purchase of open market securities in connection with the investment requirements under the terms and conditions of the Escrow Agreement, and authorizes the Mayor, the President, the City Clerk or CFO to execute any documents necessary and related to the purchase of open market securities, including (a) the engagement of Duncan-Williams, Inc., any affiliate thereof, or other agent as selected by the Mayor or the President (in either case, the "**Structuring Agent**"), to act for and on behalf of the City, if necessary, as escrow bidding agent for the open market escrow securities required by the Escrow Agreement, (b) the Mayor or President to provide approval of any award in connection with obtaining open market escrow securities, and (c) any other actions required to obtain open market escrow securities to complete the defeasance of the Defeased 2010 Bonds, including without limitation, the engagement of a verification agent in connection therewith.

SECTION 7. In connection with the transactions contemplated herein, the Governing Body hereby engages and appoints Government Consultants, Inc., as independent registered municipal advisor to the City, Butler Snow LLP, as special counsel to the City, the Structuring Agent for the City, Hancock Whitney Bank as Escrow Agent under the terms and provisions of the Escrow Agreement, and The Arbitrage Group, Inc., as verification agent, provided that the fees and expenses associated with the defeasance transactions contemplated herein and associated therewith are to be paid by the Escrow Agent under the Escrow Agreement from a portion of the City Defeasance Funds, which amounts will be reimbursed to the City from a portion of the Sacred Heart Defeasance Funds as provided in the Sacred Heart Contribution Agreement. In connection with the engagement of Butler Snow LLP, Government Consultants, Inc. and Duncan-Williams, Inc., the Mayor, the President, the City Clerk and the CFO are hereby authorized to execute the letters attached hereto as **EXHIBIT D**, **E** and **F**, respectively.

SECTION 8. The Mayor, the President and the CFO are hereby authorized to execute a requisition and perform such other acts as may be necessary to authorize the payment by the Escrow Agent under the Escrow Agreement of the fees and expenses associated with the

defeasance transactions; provided however the total fees and expense associated with the defeasance shall not exceed $30,000.

SECTION 9. The Mayor, the President, the City Clerk and the CFO are further authorized and directed to execute and deliver any additional notices, documents and certificates which are required in connection with effectuating the purposes of this resolution, including the defeasance and redemption of the Defeased 2010 Bonds and the Callable 2010 Bonds, and to make any final determinations as the particular maturities or portions of maturities of the 2010 Bonds that are to be included within the definition of the Defeased 2010 Bonds, as market conditions provide, without the necessity to obtain further approval from the Governing Body.

SECTION 10. The City is hereby authorized and directed to provide a certified copy of this resolution to the 2010 Paying Agent and to the Escrow Agent.

[REMAINDER OF PAGE LEFT BLANK INTENTIONALLY]

Following the reading of the foregoing resolution, Council Member _____ seconded the motion. After discussion, the matter was put to a roll call vote. The result was as follows:

YEAS: **NAYS:** **ABSENT:**

The motion having received the affirmative vote of the Governing Body, the President of the City Council declared the motion carried and the resolution adopted, on this the 7th day of August, 2018.

[SEAL]

ATTEST:

_____ _____

CLERK OF COUNCIL **PRESIDENT**

The above and foregoing Resolution having been submitted to and approved by the Mayor, this the 7th day of August, 2018.

_____ _____

CITY CLERK **MAYOR**

(SEAL)

EXHIBIT A

COPY OF CITY DEFEASANCE/REDEMPTION NOTICE

MAYOR
Toby Barker

COUNCIL - WARD ONE *Jeffrey George*
COUNCIL - WARD TWO *Deborah Denard Delgado*
COUNCIL - WARD THREE *Carter Carroll*
COUNCIL - WARD FOUR *Mary Dryden*
COUNCIL - WARD FIVE *Nicholas Brown*

Hancock Whitney Bank
1855 Lakeland Drive, Suite Q-230
Jackson, MS 39201
Attention: Corporate Trust Department

RE: Defeasance of all outstanding maturities of the City of Hattiesburg, Mississippi Taxable General Obligation Refunding Bonds, Series 2010, dated July 15, 2010 (the "**2010 Bonds**"), issued in the original aggregate principal amount of $2,560,000, maturing July 1 in the years 2019 through 2030 (the "**Defeased 2010 Bonds**") and the redemption of the Defeased 2010 Bonds maturing July 1 in the years 2021 through 2030 (the "**Callable 2010 Bonds**")

Ladies and Gentlemen:

The Mayor and City Council ("**Governing Body**") of the City of Hattiesburg, Mississippi, acting for and on behalf of the City of Hattiesburg, Mississippi (the "**Issuer**"), adopted a resolution on August 7, 2018 which authorized the defeasance of the Defeased 2010 Bonds and the Issuer does hereby irrevocably exercise its option to call for redemption of the Callable 2010 Bonds effective July 1, 2020, at par, and hereby directs Hancock Whitney Bank, Jackson, Mississippi, the paying agent for the 2010 Bonds (in such capacity, the "**2010 Paying Agent**"), to take any action required under the Issuer's Bond Resolution dated June 8, 2010, as amended July 6, 2010 (the "**Bond Resolution**"), including, without limitation, the giving of notice thereunder, to accomplish such redemption. Such optional redemption shall be carried out in accordance with the provisions of the Bond Resolution and the 2010 Paying Agent is hereby authorized to utilize funds provided to the 2010 Paying Agent by Hancock Whitney Bank, in its capacity as escrow agent (the "**Escrow Agent**"), from the funds held under an escrow agreement by and between the Issuer and the Escrow Agent (the "**Escrow Agreement**"), said Escrow Agreement being funded from funds of the Issuer.

From the date of execution of the Escrow Agreement, the 2010 Paying Agent shall provide for the debt service due on the Defeased 2010 Bonds and the funds for the optional redemption of the Callable 2010 Bonds from the funds provided to the 2010 Paying Agent from the Escrow Agent pursuant to funds held under the Escrow Agreement.

It is the responsibility of the 2010 Paying Agent to assure that all publications and form of redemption notices conform to the requirements of the Bond Resolution.

Sincerely,

Mayor _____
City of Hattiesburg, Mississippi

cc: Municipal Securities Rulemaking Board
(via website) at www.emma.msrb.org

42422837.v3

EXHIBIT B

FORM OF SACRED HEART CONTRIBUTION OF FUNDS AGREEMENT

AGREEMENT TO CONTRIBUTE FUNDS
Sacred Heart Bonds Defeasance

THIS AGREEMENT is made by and between **SACRED HEART CATHOLIC PARISH** ("**Sacred Heart**") and the **CITY OF HATTIESBURG, MISSISSIPPI** (the "**City**"), a municipality of the State of Mississippi, acting by and through its duly elected and serving Mayor and City Council.

WITNESSETH:

WHEREAS, on December 22, 2008, the City entered into a loan with the Mississippi Development Bank (the "**2008 Loan**") which provided funds to erect and purchase municipal buildings in the City, and purchase land therefor, and repair, improve, adorn and equip same, and for other authorized purposes under Mississippi Code of 1972, Section 31-25-1 *et seq.,* as amended and supplemented from time to time (the "**Original Project**"); and

WHEREAS, on July 15, 2010, the City issued its $2,560,000 (original principal amount) Taxable General Obligation Refunding Bonds, Series 2010, dated July 15, 2010 (the "**Bonds**"), the proceeds of which were used to refinance the 2008 Loan, and there remains outstanding $1,810,000 in aggregate principal amount of the Bonds; and

WHEREAS, the Bonds were issued pursuant to a resolution of the City Council of the City adopted June 8, 2010, as amended July 6, 2010 (the "**2010 Bond Resolution**"); and

WHEREAS, on June 8, 2010 the City entered into a Purchase and Sales Agreement with Sacred Heart Catholic Parish ("**Sacred Heart**") pursuant to which Sacred Heart makes payments to the City for use and purchase of the Original Project; and

WHEREAS, Sacred Heart has informed that City that Sacred Heart has earned and maintains on deposit an amount of cash necessary to prepay and defease the Bonds under the Bonds and the Bond Resolution; and

WHEREAS, the City has determined to defease the Bonds using funds provided by Sacred Heart; and

WHEREAS, the City desires, pursuant to the authority provided under the Act, the Bonds and the Bond Resolution, to defease the Bonds in whole, and has prepared and distributed a notice to Hancock Whitney Bank, as paying agent for the Bonds (in such capacity, the "**Paying Agent**") providing for (i) the defeasance of all outstanding maturities of the Bonds maturing July 1 in the years 2019 through 2030, both inclusive (the "**Defeased Bonds**"), with the proceeds of the funds to be provided from Sacred Heart, and (ii) the optional redemption of the Defeased Bonds maturing July 1 in the years 2021 through 2030, both inclusive (the "**Callable Bonds**"), on July 1, 2020, at par; and

WHEREAS, to effect the prepayment to or for the benefit of the holders of the Bonds, the City has approved the form of and execution of an Escrow Agreement (the "**Escrow Agreement**"), by and

between the City and Hancock Whitney Bank, Jackson, Mississippi, as escrow agent (in such capacity, the "**Escrow Agent**"), regarding the defeasance of the Defeased Bonds and the redemption of the Callable Bonds; and

WHEREAS, the City and Sacred Heart, in accordance with the Purchase and Sales Agreement, desire to, and hereby do, enter into this Agreement to Contribute Funds (this "**Agreement**") wherein Sacred Heart agrees to pay to the City to or for the benefit of the holders of the Bonds an amount of cash equal to at least the amount necessary to (a) fund the amounts required by the Escrow Agreement to provide for the defeasance of the Defeased Bonds and the redemption of the Callable Bonds on July 1, 2020, and (b) pay for the costs of such transaction.

NOW, THEREFORE, FOR AND IN CONSIDERATION of the above and the mutual covenants and promises contained herein, the City and Sacred Heart do hereby agree as follows:

1. **DURATION:** This Agreement shall be in force and effect until all outstanding Bonds are finally paid in full upon the final termination of the Escrow Agreement.

2. **PURPOSE:** The purpose of this Agreement is to define the responsibilities of the City and Sacred Heart with respect to the defeasance of the Defeased Bonds and the redemption of the Callable Bonds and the payment of the costs thereof.

3. **STATUTORY AUTHORITY:** The City and Sacred Heart are authorized to fulfill the terms of this Agreement under the authority of §§21-17-1, *et seq.*, Mississippi Code of 1972, as amended.

4. **DEFEASANCE PROJECT:** The "Defeasance Project" shall consist of (a) funding the Escrow Agreement in the amounts required thereby to defease the Defeased Bonds and redeem the Callable Bonds on July 1, 2020, at par, and (b) payment of all costs associated therewith.

5. **ADMINISTRATION:** This Agreement shall be administered as an undertaking of Sacred Heart to the City. A separate entity is not created under this Agreement.

(1) **City Obligations**. The City shall have the following obligations and responsibilities:

a. The City is designated as the legal entity assigned the responsibility for administration of this joint undertaking, and the Mayor of the City and the City's Chief Financial Officer are each hereby designated as the officers to receive, disburse and account for the funds of the undertaking in the manner prescribed by law.

b. The City will enter into the Escrow Agreement with the Escrow Agent, and, as between the City and Sacred Heart, the City will be the party obligated to ensure that all City approvals are undertaken and professionals employed in order to effect the Defeasance Project, including, without limitation, the adoption of appropriate resolutions and such other procedures and documents and distribution of notices as may be required of the City by the Bond Resolution.

c. Payment of the principal of and interest on the Defeased Bonds will be secured and provided for by a pledge of the funds and securities within the Escrow Agreement. Subject to the City's verification of the City's receipt of the lawfully available Sacred Heart Defeasance Funds (as defined herein below) under this Agreement, the City agrees to and shall use its own funds (the "**City Defeasance Funds**") to provide a payment to the Escrow Trustee of all necessary cash requirements of the Escrow Agreement and will use all reasonable efforts to undertake the establishment of the Escrow Agreement and completion of the Defeasance Project; provided, however, that the City will not pay any City Defeasance Funds for the Defeasance Project to the Escrow Agent until such time as Sacred Heart has complied with the prerequisites set forth herein, including the City's prior receipt of the Sacred Heart Defeasance Funds (defined below).

d. "Sacred Heart Defeasance Funds" shall mean the amount of _____ Million _____ Thousand Dollars ($_____) cash of Sacred Heart to be paid by Sacred Heart to the City for use by the City as a reimbursement to the City for City's payment of the City Defeasance Funds to the Escrow Agent.

e. Costs of the Defeasance Project including, but not limited to, the fees and expenses thereof, will be paid from the proceeds of the City Defeasance Funds deposited with the Escrow Agent in the Escrow Agreement, provided that all such costs shall be reimbursed to the City from the Sacred Heart Defeasance Funds.

f. The City hereby agrees to pay to Sacred Heart any amount of the Sacred Heart Defeasance Funds that are or were in excess of the amounts required to be provided for the Defeasance Project and which remain on deposit with the City following the complete funding of the Escrow Agreement (including the professional and other costs associated therewith), which payment of such excess funds, if any, the City shall make to Sacred Heart within seven (7) business days following the funding of date of funding of the Escrow Agreement.

(2) **Sacred Heart Obligations.** Sacred Heart shall have the following obligations and responsibilities:

a. Sacred Heart hereby agrees to execute any instruments consistent with this Agreement as may be reasonably necessary and required by the City or the City's Bond Counsel for the implementation and completion of the Defeasance Project and payment of the costs thereof.

b. Sacred Heart shall provide for the payment of all of the Sacred Heart Defeasance Funds to the City no later than the date the City is to provide its verbal award to purchase securities to fund the Escrow Agreement (the "**Sacred Heart Funding Date**"). Any payment by Sacred Heart of the Sacred Heart Defeasance Funds on the Sacred Heart Funding Date to the City shall be in such form and paid to such account as may be directed by the Mayor or Chief Financial Officer, so as to ensure that the Sacred Heart Defeasance Funds are on deposit with the City prior to the Sacred Heart Funding Date.

c. Sacred Heart hereby agrees that once paid to the City, Sacred Heart shall completely relinquish and have no rights to any of the Sacred Heart Defeasance Funds.

d. Following the funding of the Escrow Agreement, if it is determined that any deficiencies exist in the amounts deposited in the Escrow Agreement, Sacred Heart agrees to pay the City any and all amounts necessary to cure any such deficiencies.

5. **PAYMENTS FOR THE BENEFIT OF HOLDERS**. All payments, including, without limitation, the payment from Sacred Heart to the City of the Sacred Heart Defeasance Funds, the payment from the City to the Paying Agent or the Escrow Agent of the City Defeasance Funds, and the payment from the Paying Agent and Escrow Agent to the holders of the Bonds under the Escrow Agreement, all as referenced herein, shall for all purposes be considered transfers of property to the holders of the Bonds on account of such Bonds.

6. **AMENDMENT:** This Agreement may be amended only by mutual written consent of Sacred Heart and the City.

7. **EFFECTIVE DATE:** This Agreement shall become effective from and after the date it has been approved by the governing authorities of Sacred Heart and the City and executed by the parties hereto using multiple counterparts.

[The remainder of this page is intentionally left blank; signature page to follow.]

THIS AGREEMENT TO CONTRIBUTE FUNDS ENTERED into this the ____ day of _____, 2018.

CITY OF HATTIESBURG, MISSISSIPPI

By:_____
Mayor

ATTEST:

By:_____
City Clerk

SACRED HEART CATHOLIC PARISH

By:_____
Authorized Signatory

ATTEST:

_____

Signature page to the Agreement to Contribute Funds dated _____ ___, 2018 between the City of Hattiesburg, Mississippi and the Sacred Heart Catholic Parish.

EXHIBIT C

FORM OF ESCROW AGREEMENT

ESCROW AGREEMENT

By and between

THE CITY OF HATTIESBURG, MISSISSIPPI

AND

HANCOCK WHITNEY BANK
Jackson, Mississippi,
As Escrow Agent

Dated ___, 2018

FOR:

$2,560,000
(original aggregate principal amount)
CITY OF HATTIESBURG, MISSISSIPPI
TAXABLE GENERAL OBLIGATION REFUNDING BONDS, SERIES 2010
Dated July 15, 2010

This **ESCROW AGREEMENT** (this "**Agreement**") is made and entered into ___, 2018, by and between **THE CITY OF HATTIESBURG, MISSISSIPPI** (the "**City**") and **HANCOCK WHITNEY BANK,** Jackson, Mississippi, as escrow agent hereunder (in such capacity, the "**Escrow Agent**"):

WITNESSETH:

WHEREAS, the City has heretofore issued its $2,560,000 Taxable General Obligation Refunding Bonds, Series 2010, dated July 15, 2010 (the "**2010 Bonds**"), issued under a pursuant to a resolution of the Mayor and City Council of the City adopted on June 8, 2010, as amended July 6, 2010 (the "**Bond Resolution**"); and

WHEREAS, the City has determined that it is in its best interest to provide funds for the defeasance of all of the outstanding maturities of the 2010 Bonds maturing July 1, 2019 through July 1, 2030, both inclusive, as identified on **SCHEDULE B** hereto (together, the "**Defeased 2010 Bonds**"), and the optional redemption of the Defeased 2010 Bonds maturing July 1 in the years 2021 through 2030, both inclusive (the "**Callable 2010 Bonds**"), on July 1, 2020 (the "**Callable 2010 Bonds Redemption Date**") at par; and

WHEREAS, pursuant to the Bond Resolution the liens, rights and interest granted by the Bond Resolution to the Defeased 2010 Bonds shall cease, determine and become null and void upon the deposit in trust with the Escrow Agent of either moneys in an amount which shall be sufficient, SLGS and/or U. S. Obligations (as such terms are hereinafter defined) (together, as applicable, the "**Escrowed Securities**"), the principal of and the interest on which when due will provide moneys which, together with the moneys, if any, deposited with the Escrow Agent at the same time, will be sufficient to pay the interest due and principal to become due on the Defeased 2010 Bonds on and prior to the Callable 2010 Bonds Redemption Date, and to pay the principal due for the Callable 2010 Bonds on or before the Callable 2010 Bonds Redemption Date, at par; and

WHEREAS, the City has determined that it is in the best interest of the City to deposit in trust with the Escrow Agent the Escrowed Securities the principal of and the interest on which when due will provide moneys which, together with cash, if any, deposited with the Escrow Agent at the same time, will be sufficient, to pay the interest due and principal to become due on the Defeased 2010 Bonds on or before the Callable 2010 Bonds Redemption Date, and to pay the principal due for the Callable 2010 Bonds on or before the Callable 2010 Bonds Redemption Date, at par; and

WHEREAS, in order to deposit such amount of moneys and Escrowed Securities in trust, the City has caused its cash funds in the amount of $_____ (the "**City Equity**") to be deposited with the Escrow Agent under this Agreement and used by the Escrow Agent to provide funds for (i) the defeasance of the Defeased 2010 Bonds and redemption of the Callable 2010 Bonds (together, the "**Defeasance Project**"), and (ii) pay the costs associated with the Defeasance Project; and

WHEREAS, a portion of the funds comprising the City Equity will be applied to the purchase of certain Escrowed Securities identified on **SCHDEDULE A** hereto, which principal

amount of Escrowed Securities will mature and produce investment income and earnings at such times and in such amounts together with certain amounts held in cash as will be sufficient to pay when due all of the principal of, redemption premium, if any, and interest on the Defeased 2010 Bonds including the redemption price of the Callable 2010 Bonds; and

WHEREAS, in order to provide for the proper and timely application of the moneys deposited in said trust, the maturing principal amount of the Escrowed Securities purchased or transferred thereby and investment income and earnings derived therefrom to the payment of the Defeased 2010 Bonds, it is necessary to enter into this Agreement with the Escrow Agent on behalf of the holders from time to time of the Defeased 2010 Bonds; and

WHEREAS, the City has authorized the Escrow Agent to pay certain costs of the Defeasance Project from a certain portion of the funds comprising the City Equity in the amount of $_____.00 (the "**2018 Costs of Defeasance Funds**") for deposit in the 2018 Costs of Defeasance Fund (the "**2018 Costs of Defeasance Fund**") to be held by the Escrow Agent under this Agreement.

NOW, THEREFORE, the City by approving this Agreement, in consideration of the foregoing and the mutual covenants herein set forth and in order to secure the payment of the principal of, redemption premium, if any, and interest on all of the Defeased 2010 Bonds according to their respective tenor and effect, does by these presents hereby grant, warrant, demise, release, convey, assign, transfer, alienate, pledge, set over and confirm, unto the Escrow Agent, and its successors in the trusts hereby created, and to it and its assigns forever, all and singular, the property hereinafter described, to wit:

DIVISION I

All right, title and interest in and to any funds deposited herewith in the Escrow Fund ($_____) derived from a portion of the funds comprising of the City Equity.

DIVISION II

All right, title and interest in and to all income, earnings and increment derived from or accruing to the Escrowed Securities purchased from the money described in DIVISION I hereof and more particularly described in **SCHEDULE A**, attached hereto and made a part hereof.

DIVISION III

Any and all other property which is by the express provisions of this Agreement required to be subject to the pledge hereof and any additional property of every kind and nature, from time to time hereafter, by delivery or by writing of any kind, conveyed, pledged, assigned or transferred as and for additional security hereunder, by the City or by anyone on their respective behalf, and the Escrow Agent is hereby authorized to receive the same at any time as additional security hereunder.

TO HAVE AND TO HOLD, all and singular, the trust estate, including all additional property which by the terms hereof has or may become subject to the encumbrances of this Agreement, unto the Escrow Agent, and its successors and assigns, forever in trust, however, for

the benefit and security of the holders from time to time of the Defeased 2010 Bonds (except for the 2018 Costs of Defeasance Funds); but if the Defeased 2010 Bonds shall be fully and promptly paid when due, in accordance with the terms thereof and hereof, then this Agreement shall be and become void and of no further force and effect, otherwise the same shall remain in full force and effect, and upon the trusts and subject to the covenants and conditions hereinafter set forth.

ARTICLE I

DEFINITIONS

SECTION 1.01 DEFINITIONS. In addition to words and terms elsewhere defined in this Agreement, the following words and terms as used in this Agreement shall have the following meanings, unless some other meaning is plainly intended.

"Agreement" shall mean this Escrow Agreement, dated ___, 2018, by and between the City and the Escrow Agent.

"Authorized Newspaper" shall mean a newspaper or financial journal of general circulation in New York, New York, printed in the English language, being customarily published on each business day whether or not published on Saturdays, Sundays or holidays, such as The Bond Buyer.

"Bond Resolution" shall mean the Bond Resolution of the City adopted June 8, 2010 as amended July 6, 2010, pursuant to which the Defeased 2010 Bonds were issued and are secured.

"City" shall mean the City of Hattiesburg, Mississippi.

"Defeasance Resolution" shall mean the Resolution of the Mayor and City Council of the City dated August 7, 2018, pursuant to which the City authorized the defeasance of the Defeased 2010 Bonds using the City Equity.

"Escrowed Securities" shall mean together the SLGS and U. S. Obligations, as applicable.

"2010 Paying Agent" shall mean the paying agent under the Bond Resolution for the Defeased 2010 Bonds, which at the date of this Agreement is Hancock Whitney Bank, Jackson, Mississippi.

"SLGS" shall mean United States Treasury Securities - State and Local Government Series.

"Trust Estate", "trust estate" or "pledged property" shall mean the property, rights and interest of the City which are subject to the lien of this Agreement, but which does not include the 2018 Costs of Defeasance Fund.

"U. S. Obligations" shall mean the direct obligations of the United States of America Treasury or such other federal securities which are Government Obligations under the Bond Resolution.

"Written Request" with respect to the City shall mean a request in writing signed by the Mayor of the City or the President of the City Council of the City, or by any other officer of the City duly authorized and satisfactory to the Escrow Agent.

Words of the masculine gender shall be deemed and construed to include correlative words of the feminine and neuter genders. Words importing the singular number shall include the plural number and vice versa unless the context shall otherwise indicate. The word "person" shall include corporations, associations, natural persons and public bodies unless the context shall otherwise indicate. Reference to a person other than a natural person shall include its successors.

ARTICLE II

ESTABLISHMENT OF FUNDS; FLOW OF FUNDS

SECTION 2.01 CREATION OF FUNDS. There are hereby created and established with the Escrow Agent a special and irrevocable trust fund designated the 2010 Escrow Fund (the "**Escrow Fund**") and a 2018 Costs of Defeasance Fund (the "**2018 Costs of Defeasance Fund**"), each to be held in the custody of the Escrow Agent separate and apart from other funds of the City and the Escrow Agent. The Escrow Fund and the 2018 Costs of Defeasance Fund shall be administered pursuant to this Agreement.

The City herewith deposits or causes to be deposited with the Escrow Agent, and the Escrow Agent acknowledges receipt of, immediately available moneys in the amount of $_____ (the "**Escrow Requirement**") from a portion of the funds comprising the City Equity to be deposited by the Escrow Agent to the Escrow Fund, and the amount of the 2018 Costs of Defeasance Funds from a portion of the funds comprising the City Equity to be deposited by the Escrow Agent into the 2018 Costs of Defeasance Fund. As set forth in the verification report (the "**Verification Report**") of The Arbitrage Group, Inc. (the "**Verification Agent**"), delivered on ___, 2018, to the City and the Escrow Agent, the amount of the Escrow Requirement will be sufficient to purchase the Escrowed Securities, which will mature in principal amounts and earn income and earnings at such times, all as described in **SCHEDULE A**, so that sufficient moneys will be available to pay (i) the interest due and principal payable on the Defeased 2010 Bonds each January 1 and July 1, commencing January 1, 2019 through and including July 1, 2020, and (ii) to pay the principal outstanding of the Callable 2010 Bonds on the Callable 2010 Bonds Redemption Date at par.

The Verification Agent will verify that the deposit in the Escrow Fund of the Escrow Requirement to purchase the Escrowed Securities will produce sufficient funds to pay interest due and principal payable on the Defeased 2010 Bonds until July 1, 2020, and to redeem on said date all of the Callable 2010 Bonds maturing thereafter, all of which have been called for redemption on said date, at par.

The 2018 Costs of Defeasance Funds shall be used to pay costs of the Defeasance Project as provided in Section 2.10 hereof.

SECTION 2.02 IRREVOCABLE TRUST CREATED. The deposit of moneys for the Escrow Requirement and Escrowed Securities in the Escrow Fund shall constitute an irrevocable deposit of such moneys and Escrowed Securities for the benefit of the holders of the Defeased 2010 Bonds, except as provided herein with respect to amendments permitted under Section 4.01 hereof. The holders of the Defeased 2010 Bonds shall have an express lien on all moneys and principal of and earnings on the Escrowed Securities deposited in the Escrow Fund until applied in accordance with this Agreement. The matured principal of the Escrowed Securities and the interest thereon shall be held in trust by the Escrow Agent, and shall be transferred in the necessary amounts as hereinafter set forth in Section 2.05 to the 2010 Paying Agent for the payment of interest and principal on the Defeased 2010 Bonds as the same becomes due and payable and to the payment of the principal outstanding of the Callable 2010 Bonds on the Callable 2010 Bonds Redemption Date.

SECTION 2.03 PURCHASE OF ESCROWED SECURITIES. The Escrow Agent is hereby directed to purchase immediately the Escrowed Securities listed on **SCHEDULE A**. The Escrow Agent shall purchase the Escrowed Securities solely from the Escrow Requirement moneys deposited in the Escrow Fund. The Escrow Agent shall apply the moneys deposited in the Escrow Fund, and the Escrowed Securities purchased therewith, together with all income or earnings thereon, in accordance with the provisions hereof. The Escrow Agent shall have no power or duty to invest any moneys held hereunder or to make substitutions of the Escrowed Securities held hereunder or to sell, transfer or otherwise dispose of the Escrowed Securities acquired hereunder except as provided in this Agreement.

SECTION 2.04 SUBSTITUTION OF OBLIGATIONS. Notwithstanding any other provision of this Agreement, at the Written Request of the City, and upon compliance with the conditions hereinafter stated, the Escrow Agent shall have the power to sell, transfer, otherwise dispose of or request the redemption of the Escrowed Securities held hereunder and to substitute therefor other Escrowed Securities; provided, however, the foregoing may be effected only if: (i) the substitution of the Escrowed Securities for the substituted Escrowed Securities occurs simultaneously; (ii) the amounts of and dates on which the anticipated transfers from the Escrow Fund to the 2010 Paying Agent for the payment of principal of, redemption premium, if any, and interest on the Defeased 2010 Bonds, will not be diminished or postponed thereby; (iii) the Escrow Agent shall receive from a nationally recognized independent certified public accountant firm a certification, that, immediately after such substitution, the principal of and the interest on the Escrowed Securities in the Escrow Fund when due and paid will, together with any other moneys held for such purpose, be sufficient to pay the principal of, redemption premium, if any, and interest on the Defeased 2010 Bonds, when due, in accordance with this Agreement; and (iv) the Escrow Agent shall receive an opinion from Butler Snow LLP, or from any other nationally recognized attorneys on the subject of municipal bonds, to the effect that the disposition and substitution or purchase of such Escrowed Securities is not inconsistent with the statutes and regulations applicable to the 2010 Bonds and that the conditions of this Section 2.04 have been satisfied. Any surplus moneys resulting from the sale, transfer, other disposition or redemption of the Escrowed Securities held hereunder and the substitutions therefor of Escrowed Securities shall be released from the Trust Estate and shall be transferred to the City.

The Escrow Agent shall purchase such substituted Escrowed Securities with the proceeds derived from the maturity, sale, transfer, disposition or redemption of the Escrowed Securities held hereunder or from other moneys available.

SECTION 2.05 TRANSFERS FROM ESCROW FUND. As the principal of the Escrowed Securities set forth in **SCHEDULE A** (subject to the reinvestment, if any, of the principal and interest made pursuant to Section 2.06 and the application of investment earnings in accordance with Section 2.06), shall mature and be paid, and the investment income and earnings thereon are paid, the Escrow Agent shall, no later than each interest payment date for the Defeased 2010 Bonds, transfer from the Escrow Fund to the 2010 Paying Agent for the Defeased 2010 Bonds amounts sufficient to pay the interest and principal on the Defeased 2010 Bonds coming due on each interest payment date and to pay the principal, as applicable, outstanding of the Callable 2010 Bonds on the Callable 2010 Bonds Redemption Date, all as set forth in **SCHEDULE B** hereto. Such amounts shall be applied by the 2010 Paying Agent to the payment of all principal of, redemption premium, if any, and interest on the Defeased 2010 Bonds for the equal and ratable benefit of the holders of the Defeased 2010 Bonds. Currently, principal, redemption premium, if any, and interest on the Defeased 2010 Bonds are payable at the principal office of the 2010 Paying Agent in Jackson, Mississippi.

SECTION 2.06 INVESTMENT OF CERTAIN MONEYS REMAINING IN TRUST FUNDS. Any moneys remaining from time to time in the Escrow Fund until such time that they are needed may be invested and reinvested in Escrowed Securities maturing no later than the next interest payment date or Callable 2010 Bonds Redemption Date of the Defeased 2010 Bonds, or such periods or at such interest rates that the Escrow Agent shall be directed to invest by a Written Request of the City. In addition, the Escrow Agent shall receive from a nationally recognized independent certified public accounting firm a certification that, immediately after such transaction, the principal of and the interest on the Escrowed Securities in the Escrow Fund when due and paid will, together with any other moneys held for such purpose, be sufficient to pay the principal of, redemption premium, if any, and interest on the Defeased 2010 Bonds, when due. Any interest income, earnings or gain resulting from such reinvestment of moneys shall be released from the Trust Estate and transferred to the City. To the extent amounts are not reinvested in accordance with the provisions of this Section 2.06, such amounts shall be held uninvested as provided in the Verification Report.

SECTION 2.07 FUNDS AND ACCOUNTS CONSTITUTE TRUST FUNDS. All the funds and accounts created and established pursuant to this Agreement shall be and constitute trust funds for the purposes provided in this Agreement and shall be kept separate and distinct from all other funds of the City and the Escrow Agent and used only for the purposes and in the manner provided in this Agreement.

SECTION 2.08 TRANSFER OF FUNDS AFTER ALL PAYMENTS REQUIRED BY THIS AGREEMENT ARE MADE. After all of the transfers by the Escrow Agent to the 2010 Paying Agent for payment of the principal of, redemption premium, if any, and interest on the Defeased 2010 Bonds have been made, all remaining moneys and Escrowed Securities, together with any income and interest thereon, in the Escrow Fund shall be transferred by the Escrow Agent to the City; provided, however, that no such transfer shall be made until all of the

principal of, redemption premium, if any, and interest on the outstanding Defeased 2010 Bonds have been paid in full.

SECTION 2.09 DEFEASANCE NOTICE, REDEMPTION NOTICE AND ADDITIONAL NOTICES. The City hereby directs the Escrow Agent, and the Escrow Agent hereby agrees, to cause to be prepared and published in the form thereof as attached hereto as **SCHEDULE C**, within 30 days after the Escrowed Securities are deposited with it, and at the expense of the City (subject to Section 3.10 hereof) a notice to the holders of the Defeased 2010 Bonds setting forth that the irrevocable deposit of moneys and investment thereof has been made in accordance with the Bond Resolution, and respectively, (i) that all the Callable 2010 Bonds maturing on or after July 1, 2021 will be redeemed on July 1, 2020 at a redemption price of par, (ii) a description of the Escrowed Securities so held by it, and (c) that the lien of the Bond Resolution on the Defeased 2010 Bonds has been released in accordance with the provisions of the Bond Resolution.

The City hereby directs the Escrow Agent, and the Escrow Agent hereby agrees, (a) to redeem in accordance with the Bond Resolution all of the Callable 2010 Bonds outstanding under the Bond Resolution as of July 1, 2020; and (b) to cause to be prepared and published or mailed, as the case may be, in connection with the redemption of the Defeased 2010 Bonds under the Bond Resolution, or required or recommended, from time to time, by the Securities and Exchange Commission (in accordance with the standards endorsed by the Securities and Exchange Commission in Release 34-2385, issued December 3, 1986) and by the Municipal Securities Rulemaking Board, to the extent applicable.

SECTION 2.10 APPLICATION OF 2018 COSTS OF DEFEASANCE FUNDS. Proceeds of the City Equity deposited to the 2018 Costs of Defeasance Fund in the amount of $_____.00 representing the 2018 Costs of Defeasance Funds will be used by the Escrow Agent to pay invoices submitted to the Escrow Agent for and on behalf of the City regarding costs of the Defeasance Project. Any portion of the 2018 Costs of Defeasance Funds remitted to the Escrow Agent for the payment of the costs of the Defeasance Project and not used to pay such costs of within sixty (60) days of the execution of this Agreement shall be transferred to the City. The 2018 Costs of Defeasance Funds will remain uninvested until used to pay costs of the Defeasance Project or remitted to the City under the provisions herein provided. The 2018 Costs of Defeasance Funds shall be segregated from other moneys deposited in the Escrow Fund and held in a separate account to be used for the payment of costs of the Defeasance Project expenses as authorized by the City in the Defeasance Resolution.

ARTICLE III

CONCERNING THE ESCROW AGENT

SECTION 3.01 APPOINTMENT OF THE ESCROW AGENT. The City hereby appoints Hancock Whitney Bank, Jackson, Mississippi, as the Escrow Agent under this Agreement.

SECTION 3.02 ACCEPTANCE BY ESCROW AGENT. By execution of this Agreement, the Escrow Agent accepts the duties and obligations as Escrow Agent hereunder.

The Escrow Agent further represents that it has all requisite power, and has taken all corporate actions necessary to execute the trust hereby created.

SECTION 3.03 LIABILITY OF ESCROW AGENT. The Escrow Agent shall not be liable in connection with the performance of its duties hereunder except for its own negligent action, its own negligent failure to act or its own willful misconduct.

The Escrow Agent shall not be liable for any loss resulting from any investment made pursuant to the terms and provisions of this Agreement. The Escrow Agent shall have no lien, security interest or right of set-off whatsoever upon any of the moneys or investment in the Escrow Fund for the payment of fees and expenses for services rendered by the Escrow Agent under this Agreement or for any other amounts owed to the Escrow Agent.

The Escrow Agent shall not be liable for the accuracy of the calculations as to the sufficiency of moneys and of the principal amount of the Escrowed Securities and the earnings thereon to pay the Defeased 2010 Bonds. So long as the Escrow Agent applies any moneys, the Escrowed Securities and the interest earnings therefrom to pay the Defeased 2010 Bonds as provided herein, and complies fully with the terms of this Agreement, the Escrow Agent shall not be liable for any deficiencies in the amounts necessary to pay the Defeased 2010 Bonds caused by such calculations.

In the event of the Escrow Agent's failure to account for any of the Escrowed Securities or moneys received by it, such Escrowed Securities or moneys shall be and remain the property of the City in trust for the holders of the Defeased 2010 Bonds as herein provided.

SECTION 3.04 PERMITTED ACTS. The Escrow Agent and its officers and directors may acquire and hold, or become the owner or pledge of or may deal in the Defeased 2010 Bonds as fully and with the same rights as if it were not the Escrow Agent.

SECTION 3.05 RESIGNATION OF ESCROW AGENT. The Escrow Agent or any successor escrow agent, at the time acting hereunder, may at any time resign and be discharged from the duties and obligations of the trust hereby created by giving 60 days' written notice to the City and by giving to the registered holders of the Defeased 2010 Bonds notice of such resignation by first class mail. Upon receiving such notice of resignation, the City shall promptly appoint a successor escrow agent by an instrument in writing.

SECTION 3.06 REMOVAL OF ESCROW AGENT. Upon the Written Request of the City the Escrow Agent may be removed at any time if (i) the Escrow Agent shall cease to be eligible in accordance with the provisions set forth herein and shall fail to resign after Written Request therefor from the City or from any registered holder of the Defeased 2010 Bonds who has been a bona fide holder of a defeased bond for at least six (6) months, or (ii) the Escrow Agent shall become incapable of acting or shall be adjudged a bankrupt or insolvent or a receiver of the Escrow Agent or of its property shall be appointed, or any public officer shall take charge or control of the Escrow Agent or of its property or affairs for the purpose of rehabilitation, conservation or liquidation.

The Escrow Agent may also be removed by the registered holders of the Defeased 2010 Bonds of a majority in aggregate principal amount of each the Defeased 2010 Bonds at the time

outstanding by an instrument or concurrent instruments in writing signed by such registered holders of the Defeased 2010 Bonds.

Any removal of the Escrow Agent and appointment of a successor escrow agent in accordance with the provisions set forth herein shall become effective upon acceptance of appointment by the successor escrow agent as provided herein.

SECTION 3.07 APPOINTMENT OF SUCCESSOR ESCROW AGENT. If no successor escrow agent shall have been appointed and shall have accepted such appointment within thirty (30) days after such notice of resignation, the resigning escrow agent may petition any court of competent jurisdiction for the appointment of a successor escrow agent, or any registered holder of the Defeased 2010 Bonds who has been a bona fide holder for at least six (6) months may, on behalf of itself and others similarly situated, petition any such court for the appointment of a successor escrow agent. Such court may thereupon, after such notice, if any, as it may deem proper and prescribed, appoint a successor escrow agent. Any resignation by the Escrow Agent and appointment of a successor escrow agent in accordance with the provisions set forth herein shall become effective upon acceptance of appointment by the successor escrow agent in accordance with the provisions set forth herein.

Any successor escrow agent appointed under the provisions of this Agreement shall be an entity organized and doing business under the laws of the United States or any state authorized under such laws to exercise corporate trust powers, having its principal office and place of business in any state, having a combined capital and surplus of at least $50,000,000, and subject to supervision or examination by federal or state authority. If such entity published reports of condition at least annually, pursuant to law or to the requirements of any supervising or examining authority above referred to, then the combined capital and surplus of such corporation shall be deemed to be its combined capital and surplus as set forth in its most recent report of condition so published. In case at any time the Escrow Agent shall cease to be eligible in accordance herewith, the Escrow Agent shall resign immediately in the manner and with the effect specified in Section 3.05 hereof.

SECTION 3.08 VESTING OF TRUSTS IN SUCCESSOR ESCROW AGENT. Any successor escrow agent appointed hereunder shall execute, acknowledge and deliver to its predecessor, and also to the City, an instrument in writing accepting such appointment hereunder, and thereupon the resignation or removal of the predecessor escrow agent shall become effective; and such successor escrow agent, without any further act, deed or conveyance, shall become vested with all the rights, powers, trusts, duties and obligations of its predecessor in the trusts hereunder, with like effect as if originally named as escrow agent herein. Upon request of any such successor escrow agent, the City shall execute any and all instruments in writing for more fully and certainly vesting in and conforming to such successor escrow agent all such rights, powers and duties.

Upon acceptance of appointment by a successor escrow agent as heretofore provided, the City shall publish notice of the succession of such escrow agent to the trust hereunder. Such notice shall be published at least once in an Authorized Newspaper. If the City fails to publish such notice within ten (10) days after acceptance of appointment by the successor escrow agent, the successor escrow agent shall cause such notice to be published at the expense of the City.

Any entity into which the Escrow Agent may be merged or with which it may consolidate or any entity resulting from any merger or consolidation to which the Escrow Agent shall be a party, or any entity succeeding to the business of the Escrow Agent, shall be the successor to the Escrow Agent hereunder without the execution or filing of any paper or any further act on the part of any of the parties hereto, anything herein to the contrary notwithstanding, provided that such successor escrow agent shall be eligible under the provisions thereof.

Notwithstanding any of the foregoing provisions of this Article, any bank or trust company having power to perform the duties and execute the trusts of this Agreement and otherwise qualified to act as Escrow Agent hereunder with or into which the bank or trust company acting as Escrow Agent may be merged or consolidated, or to which the assets and business of such bank or trust company may be sold, shall be deemed the successor of the Escrow Agent.

SECTION 3.09 RECEIPT OF PROCEEDINGS. Possession of or receipt of true and correct copies of the Bond Resolution and the proceedings authorizing the issuance of the 2010 Bonds are hereby acknowledged by the Escrow Agent, and reference herein to or citation herein of any provision of such documents shall be deemed to incorporate the same as a part hereof in the same manner and with the same effect as it they were fully set forth herein.

SECTION 3.10 ARRANGEMENTS FOR PAYMENT OF ALL OTHER SUMS PAYABLE UNDER THE BOND RESOLUTION. The Escrow Agent hereby acknowledges that the City has paid, caused to be paid or made arrangements satisfactory to the Escrow Agent for payment of all other sums (in addition to debt service on the 2010 Bonds) payable under the Bond Resolution until the Defeased 2010 Bonds are paid as provided in Section 2.01 hereof. If such arrangements for fees and expenses shall include a prepayment of all or part thereof and if the Escrow Agent resigns or is removed in accordance with Section 3.05 and 3.06 hereof, the Escrow Agent agrees to return to the City that portion of the prepaid fee which is attributable to that part of the trust which is then still to be administered.

ARTICLE IV

MISCELLANEOUS

SECTION 4.01 AMENDMENTS TO THIS AGREEMENT. This Agreement is made for the benefit of the City and the holders from time to time of the Defeased 2010 Bonds and it shall not be repealed, revoked, altered or amended without the written consent of the holders of 100% of the Defeased 2010 Bonds which have not then been paid in accordance with this Agreement. Notwithstanding the foregoing, however, the City may, and the City shall (upon receipt of an opinion of nationally recognized bond counsel satisfactory to the City that the excludability of the interest on the 2010 Bonds from gross income under State of Mississippi law will not be adversely affected), without the consent of, or notice to, such holders, enter into such agreements supplemental to this Agreement as shall not adversely affect the rights of such holders and as shall not be inconsistent with the terms and provisions of this Agreement, for any one or more of the following purposes:

(a) To cure any ambiguity or formal defect or omission in this Agreement;

(b) To grant to, or confer upon, the Escrow Agent for the benefit of the holders of the Defeased 2010 Bonds, any additional rights, remedies, powers or authority that may lawfully be granted to, or conferred upon, such holders or the Escrow Agent; or

(c) To subject to the lien of this Agreement additional funds, securities or properties.

The Escrow Agent shall be entitled to rely exclusively upon an unqualified opinion of nationally recognized attorneys on the subject of municipal bonds with respect to compliance with this Section, including the extent, if any, to which any change, modification, addition or elimination affects the rights of the holders of the Defeased 2010 Bonds, or that any instrument executed hereunder complies with the conditions and provisions of this Section.

All amendments to this Agreement require notice in writing to Moody's Investors Service, Inc.

SECTION 4.02 SEVERABILITY. If any one or more of the covenants or agreements provided in this Agreement on the part of the City or the Escrow Agent to be performed should be determined by a court of competent jurisdiction to be contrary to law, such covenant or agreement shall be deemed and construed to be severable from the remaining covenants and agreements herein contained and shall in no way affect the validity of the remaining provisions of this Agreement.

SECTION 4.03 AGREEMENT BINDING. All the covenants, promises and agreements in this Agreement contained by or on behalf of the City or the Escrow Agent shall bind and inure to the benefit of their respective successors and assigns, whether so expressed or not.

SECTION 4.04 TERMINATION. This Agreement shall terminate when all transfers and payments required to be made by the Escrow Agent under the provisions hereof shall have been made.

SECTION 4.05 GOVERNING LAW. This Agreement shall be governed by the applicable law of the State of Mississippi.

SECTION 4.06 EXECUTION BY COUNTERPARTS. This Agreement may be executed in several counterparts, all or any of which shall be regarded for all purposes as one original and shall constitute and be but one and the same instrument.

[remainder of page left blank intentionally]

IN WITNESS WHEREOF, each of the parties hereto has caused this Agreement to be executed by its duly authorized officers or officials.

[SEAL] **CITY OF HATTIESBURG, MISSISSIPPI**

BY:_____
Mayor

ATTEST:

BY:_____

Signature Page to Escrow Agreement dated ___, 2018, by and between the City of Hattiesburg, Mississippi and Hancock Whitney Bank, Jackson, Mississippi, as Escrow Agent.

HANCOCK WHITNEY BANK
Jackson, Mississippi
as Escrow Agent

BY:_____
Trust Officer

Signature Page to Escrow Agreement dated ___, 2018, by and between the City of Hattiesburg, Mississippi and Hancock Whitney Bank, Jackson, Mississippi, as Escrow Agent.

SCHEDULE A

ESCROW FUND SECURITIES

SCHEDULE B

DEBT SERVICE
REQUIREMENTS FOR THE DEFEASED 2010 BONDS

SCHEDULE C

NOTICE OF DEFEASANCE

NOTICE OF DEFEASANCE

$2,560,000
(original aggregate principal amount)
CITY OF HATTIESBURG, MISSISSIPPI
TAXABLE GENERAL OBLIGATION REFUNDING BONDS, SERIES 2010
Dated July 15, 2010

Maturing July 1, 2019 through and including July 1, 2030, as follows:

Maturity (July 1)	Par Amount Issued and Defeased	Interest Rate	CUSIP
2019	$225,000	4.500 %	
2025	680,000	5.875	
2030	905,000	6.000	

Notice is hereby given to the holders of the obligations captioned above as "Par Amount Issued and Defeased" (hereinafter referred to as the "Defeased 2010 Bonds") that there has been deposited in an irrevocable escrow account held by Hancock Whitney Bank, Jackson, Mississippi, as Escrow Agent, $_____ which will provide moneys which shall be sufficient to pay principal of, premium, if any, and interest on the Defeased 2010 Bonds on and prior to their redemption or maturity dates thereof, as described below. Pursuant to the Bond Resolution of the City of Hattiesburg, Mississippi adopted June 8, 2010, as amended July 6, 2010 (the "Bond Resolution"), each described maturity to be defeased and called for redemption shall paid by Hancock Whitney Bank, as paying agent for the Defeased 2010 Bonds in such manner as determined in, and pursuant to the notice provisions of, the Bond Resolution.

Moneys will be available for the payment of interest on the Defeased 2010 Bonds due on each January 1 and July 1, commencing January 1, 2019, to and including July 1, 2020, and for the principal of the Defeased Bonds on July 1, 2019 and July 1, 2020. All of the Defeased 2010 Bonds maturing on or after July 1, 2020, will be called for redemption on July 1, 2020 at a price of par. The Defeased 2010 Bonds are deemed to have been paid in accordance with the Bond Resolution. Accordingly, the right, title and interest of the holders of the Defeased 2010 Bonds in the Bond Resolution and other moneys as provided in the Bond Resolution, have ceased, determined and become null and void.

The holders of the Defeased 2010 Bonds are entitled for payment (from the paying agent for the Defeased 2010 Bonds) solely out of the moneys or securities so deposited in such escrow account

Dated this _____ day of _____, 2018.

HANCOCK WHITNEY BANK,
as Escrow Agent

BY:_____
Trust Officer

EXHIBIT D

BUTLER SNOW LETTER

BUTLER | SNOW

August 7, 2018

VIA E-MAIL

City of Hattiesburg, Mississippi
Attn: Mayor and City Council
P.O. Box 1898
Hattiesburg, MS 39403-1898

Defeasance of
City of Hattiesburg, Mississippi
Taxable General Obligation Refunding Bonds, Series 2010
dated July 15, 2010

Ladies and Gentlemen:

We are pleased to confirm our engagement as special counsel to the City of Hattiesburg, Mississippi (the "City") with respect to the defeasance of the above captioned bonds. We appreciate your confidence in us and will do our best to continue to merit it.

As you know, we have performed legal services for transactions of the City in the past. Nevertheless, in establishing our attorney-client relationship for this new transaction, current practice standards dictate that we set forth in writing (and in some detail) the elements of our mutual understanding. While some of the matters covered in this engagement letter will never be relevant or of concern between us, we hope you will understand that as attorneys and counselors it is our natural function to try to make communication clear and complete, and to anticipate and resolve questions before they arise. We also believe that the performance of our services may require your effort and cooperation. Consequently, the better we each understand our respective roles, responsibilities and contributions, the more efficient, effective and economical our work for you can be.

Personnel

This letter sets forth the role we propose to serve and the responsibilities we propose to assume as special counsel to the City in connection with the defeasance. We understand that the Mayor and City Council of the City have authorized the execution of this letter. Elizabeth Clark and Thad Varner will be principally responsible for the work performed on

your behalf. Where appropriate, certain tasks may be performed by other attorneys or paralegals.

Scope of Employment

We have been engaged by you as a recognized expert with respect to the defeasance of bonds. As special counsel in this regard, we will: examine applicable law; consult with the parties to the transaction; review a certified transcript of proceedings and documentation regarding the defeased bonds; and undertake such additional duties as we deem necessary to render our defeasance opinion. Subject to the completion of proceedings to our satisfaction, we will render our opinion relating to the defeasance.

Our services are limited to those contracted for explicitly herein; the City's execution of this letter constitutes an acknowledgment of those limitations. Specifically, but without implied limitation, our responsibilities do not include any representation by Butler Snow LLP in connection with the sale of any ownership interests in the City, any opinion of this firm other than the defeasance opinion, any IRS audit, SEC enforcement action or any litigation involving the City, or any other matter. Neither do we assume responsibility for the preparation of any documents which are to be filed with any state, federal or other regulatory agency. Nor do our services include financial advice.

Representation of the City

In performing our services as special counsel, the City will be our client and an attorney-client relationship will exist between us. We will represent the interests of the City rather than its governing body, its individual members, or the City's employees.

Fee Arrangement

Based upon our current understanding of the transaction, our fee as special counsel will not exceed $15,000.

Document Retention

Butler Snow maintains its client files electronically. We do not keep separate paper files. We will scan documents you or others send to us related to your matter to our electronic file for that matter and will retain only the electronic version while your matter is pending. Unless you instruct us otherwise, once such documents have been scanned to our electronic file, we will destroy all paper documents provided to us. If you send us original documents that need to be maintained as originals while the matter is pending, we ordinarily will scan those to our client file and return the originals to you for safekeeping. Alternatively, you may request that we maintain such originals while the matter is pending.

If we agree to do that, we will make appropriate arrangements to maintain those original documents.

Unless you instruct us otherwise, once our work on this matter is completed, we will designate your file as a closed file on our system and will apply our document retention policy then in effect to the materials in your closed file. At that time, we ordinarily will return to you any original documents we have maintained in accordance with the preceding paragraph while the matter was pending. Otherwise, we will retain the closed file materials for our benefit and subject to our own policies and procedures concerning file retention and destruction. Accordingly, if you desire copies of any documents (including correspondence, e-mails, pleadings, contracts, agreements, etc.) related to this matter or generated while it was pending, you should request such copies at the time our work on this matter is completed.

Termination of Engagement

The above fees contemplate compensation for expedited services as special counsel to the City in connection with the defeasance. Upon delivery of the opinion, our responsibilities as special counsel will terminate with respect to this defeasance, and our representation of the City and the attorney-client relationship created by this engagement letter will be concluded. Specifically, but without implied limitation, we do not undertake to provide continuing advice to the City or to any other party to the transaction. Should the City seek the advice of counsel on a post-closing matter or seek other, additional legal services, we would be happy to discuss the nature and extent of our separate engagement at that time.

Approval

If the estimated fees and other foregoing terms of this engagement are acceptable to you, please so indicate by returning a copy of this letter signed by the officer so authorized, keeping a copy for your files.

We are pleased to have the opportunity to serve as your special counsel and look forward to a mutually satisfactory and beneficial relationship. We are deeply committed to the proposition that our clients must be satisfied with the quality of our services as well as the amount of our charges. Our effectiveness and your best interest are enhanced by an atmosphere of candor and confidence between us, not only as to the facts and circumstances of the legal issues on which we are working, but also as to the attorney-client relationship itself. If at any time you have questions concerning our work or our fees, we hope that you will contact us immediately.

BUTLER SNOW LLP

Elizabeth Lambert Clark

By: _____
Elizabeth Lambert Clark

Accepted and Approved:

THE CITY OF HATTIESBURG, MISSISSIPPI

BY: _____
Mayor

Dated: _____

43295497.v1

EXHIBIT E

GOVERNMENT CONSULTANTS LETTER

GOVERNMENT CONSULTANTS

GOVERNMENT CONSULTANTS, INC.

Consulting & Municipal Advisory Firm

116 Village Boulevard
Madison, Mississippi 39110

Telephone: (601) 982-0005
Facsimile: (601) 982-2448
Email: gcms@gc-ms.net

August 7, 2018

Mayor Barker and City Council
City of Hattiesburg, Mississippi
200 Forrest Street
Hattiesburg, Mississippi 39401

Re: City of Hattiesburg, Mississippi
DEFEASANCE of City of Hattiesburg, Mississippi Taxable General Obligation Bonds, Series 2010 (the "Bonds")
Disclosure and Engagement Letter (the "Letter")

Dear Mayor and City Council,

We are writing you to provide certain disclosures to you as representative of the City of Hattiesburg, Mississippi (the "Issuer") as required by the Securities and Exchange Commission ("SEC") and Municipal Securities Rulemaking Board ("MSRB" or the "Board"). Government Consultants, Inc. ("GCI" or the "Municipal Advisor") is an Independent Registered Municipal Advisor and welcomes the opportunity to provide municipal advisory services to the Issuer for the defeasance of the above reference Bonds.

Disclosures Concerning our Role as Municipal Advisor

(i) The Municipal Advisor has a fiduciary duty to the Issuer. This is different than an underwriter, if any, who only has an obligation to deal fairly with you, as Issuer. The underwriter, if any, has financial and other interests that differ from the Issuer, unlike the Municipal Advisor who has no financial or other interests that differ from the Issuer.

(ii) We shall provide advice concerning the structure, timing, terms, sizing and other similar matters related to the defeasance by the Issuer.

(iii) We shall make a reasonable inquiry to the relevant facts that help determine what course of action to take that best suits the Issuer. A reasonable analysis will be conducted to determine that all advice and/or recommendation(s), are not based on materially inaccurate or incomplete information.

(iv) We shall evaluate possible material risks, benefits and alternatives with the Issuer.

(v) Our duties are limited to this transaction and the above-mentioned disclosures.

The MSRB provides a brochure covering information for municipal advisory client protections and appropriate regulatory authority contact information on the MSRB homepage at http://www.msrb.org.

Disclosure Concerning Conflicts of Interest and Other Information

MSRB Rule G-42 requires that GCI provide in writing any disclosures relating to actual or potential material conflicts of interest, including certain categories of potential conflicts of interest identified in MSRB Rule G-42, if applicable. After reasonable due diligence by GCI, there are no known material conflicts of interest that may affect GCI's ability to serve as a municipal advisor to the Issuer. If new material conflict(s) of interest occurs after the delivery and execution of this Letter, GCI will disclose all new material conflict(s) of interest to the Issuer.

In addition to providing disclosures concerning material conflict(s) of interest, MSRB Rule G-42 further requires GCI to have a fiduciary duty that includes a duty of loyalty and duty of care to the Issuer and to disclose our role and duties as a Municipal Advisor. Our primary obligation is to always act in the best interest of the Issuer.

Disclosure Concerning the Compensation

Our compensation for serving as municipal advisor will be contingent on the closing of the transaction(s) for the issuance of bonds and is based, in part, on the size of the bonds. We will negotiate with the Issuer as to compensation and will be paid upon closing of the transaction(s). The Municipal Advisor will abide by its fiduciary duty to the Issuer and provide unbiased and independent advice as required by MSRB.

Disclosure of Information Regarding Legal Events and Disciplinary History

MSRB Rule G-42 requires that all municipal advisors, including GCI, provide in writing to their clients certain legal or disciplinary events that are material to the Issuer's evaluation of GCI or the integrity of GCI management or personal. GCI believes there are no known legal or disciplinary events reported on any Form MA or Form MA-I that are material to your evaluation of GCI and there are no recent changes made on any Form MA or Form MA-I that are material to your evaluation. Any such information, whether material or not must be reported on Form MA and/or MA-l filed with the SEC, which forms are available and which can be viewed on the SEC's EDGAR system website at http://www.sec.gov/edgar/searchedgar/companysearch.html.

Disclosure Concerning the Term of Engagement

The Term of Engagement is effective on the execution date of the document that employed GCI as the Issuer's appointed municipal advisor and ends upon the closing and delivery of the Bonds. The Engagement may be terminated with or without cause by the Issuer or the Municipal Advisor. A written notice must be delivered to the other party, specifying the effective date of the termination.

Acknowledgement

We must seek your acknowledgement that you have received this Letter. Accordingly, please acknowledge receipt of this Letter on behalf of the Issuer in the space provided below. If you are not authorized to execute this Letter on behalf of the Issuer, please notify GCI immediately so the correct individual may be contacted. Please let us know if you have any questions or concerns.

Sincerely,

Government Consultants, Inc.

BY: _____
Lynn Norris

RECEIPT ACKNOWLEDGEMENT

BY: _____ _____
Signature **Date**

Toby Barker, Mayor, City of Hattiesburg, Mississippi
Authorized Representative's Name

EXHIBIT F

DUNCAN-WILLIAMS LETTER

IRMA REPRESENTATION LETTER

To: Duncan-Williams, Inc.

Re: Independent Registered Municipal Advisor (IRMA) Representation

We are writing to provide you with certain representations pursuant to Rule 15Ba1-1 (the *"Municipal Advisor Rule"*) of the Securities and Exchange Commission (the *"SEC"*) under the Securities Exchange Act of 1934, as amended (the *"Act"*), regarding our independent registered municipal advisor.

Pursuant to paragraph (d)(3)(vi)(B) of the Municipal Advisor Rule, we hereby represent to you that we are represented by, and will rely on the advice of, Government Consultants, Inc, (the *"Advisor"*) on all matters relating to the issuances of municipal securities and municipal financial products including the investment of bond proceeds and escrow investments.

We have been advised by the Advisor that: (i) it has registered as a municipal advisor with the SEC and the Municipal Securities Rulemaking Board; and (ii) Lynn Norris, who has been employed by the Advisor for at least two years prior to the date of this letter, are the Associated Individuals of the Advisor for its representation of us.

We understand that Duncan-Williams, Inc. is not acting as a municipal advisor and is therefore not subject to the fiduciary duty set forth in Section 15B(c)(1) of the Act.

Capitalized terms used and not defined in this letter have the meanings assigned to them in the Act, the Municipal Advisor Rule and the related guidance of the SEC's Office of Municipal Securities. You may rely on this representation letter until such time as you receive notice from us.

Sincerely,

_____

Toby Barker
Mayor, City of Hattiesburg, Mississippi
August 7, 2018

For further information about the Municipal Advisor Rule, please refer to the SEC's May 2014 FAQs.

There came on for consideration at a duly constituted meeting of the Mayor and Members of the City Council of the City of Hattiesburg, Mississippi, held on the 7th day of **August, 2018**, the following Resolution:

RESOLTUION 2018-101

There came on for consideration the matter of providing prepaying certain outstanding obligations of the City of Hattiesburg, Mississippi, and after a discussion of the subject matter, Council Member Delgado offered and moved the adoption of the following resolution:

RESOLUTION (I) AUTHORIZING AND APPROVING THE DEFEASANCE OF CERTAIN OUTSTANDING TAXABLE GENERAL OBLIGATION REFUNDING BONDS OF THE CITY OF HATTIESBURG, MISSISSIPPI, AS DESCRIBED HEREIN; (II) AUTHORIZING AND APPROVING THE FORM OF AND EXECUTION OF AN ESCROW AGREEMENT (THE "ESCROW AGREEMENT"); (III) APPROVING THE SELECTION OF HANCOCK WHITNEY BANK, JACKSON, MISSISSIPPI, AS ESCROW AGENT UNDER THE TERMS AND PROVISIONS OF THE ESCROW AGREEMENT; (IV) AUTHORIZING AND APPROVING THE FORM OF A CONTRIBUTION OF FUNDS AGREEMENT WITH SACRED HEART CATHOLIC PARISH; AND (V) AUTHORIZING AND RATIFYING PURCHASING OF CERTAIN OPEN MARKET SECURITIES OR THE INITIAL AND FINAL APPLICATIONS TO DEPARTMENT OF THE TREASURY, BUREAU OF PUBLIC DEBT, DIVISION OF SPECIAL INVESTMENTS, PARKERSBURG, WEST VIRGINIA FOR UNITED STATES TREASURY SECURITIES - STATE AND LOCAL GOVERNMENT SERIES IN CONNECTION WITH THE REQUIREMENTS OF THE ESCROW AGREEMENT; (VI) AND FOR RELATED PURPOSES.

WHEREAS, on December 22, 2008, the City of Hattiesburg (the "**City**"), entered into a loan with the Mississippi Development Bank (the "**2008 Loan**") which provided funds to erect and purchase municipal buildings in the City, and purchase land therefor, and repair, improve, adorn and equip same, and for other authorized purposes under Mississippi Code of 1972, Section 31-25-1 *et seq.,* as amended and supplemented from time to time (the "**Original Project**"); and

WHEREAS, on July 15, 2010, the City issued its $2,560,000 Taxable General Obligation Refunding Bonds, Series 2010, dated July 15, 2010 (the "**2010 Bonds**"), the proceeds of which were used to refinance the 2008 Loan, and there remains outstanding $1,810,000 in aggregate principal amount of 2010 Bonds; and

WHEREAS, the 2010 Bonds were issued pursuant to a resolution of the City Council of the City adopted June 8, 2010, as amended July 6, 2010 (the "**2010 Bond Resolution**"); and

WHEREAS, on June 8, 2010, the City entered into a Purchase and Sales Agreement with Sacred Heart Catholic Parish ("**Sacred Heart**") pursuant to which Sacred Heart makes payments to the City for use and purchase of the Original Project; and

WHEREAS, Sacred Heart has informed the City that Sacred Heart has earned and maintains on deposit an amount of cash necessary to prepay the outstanding 2010 Bonds; and

WHEREAS, the City has determined to prepay the 2010 Bonds using funds provided from Sacred Heart in the form of the Sacred Heart Defeasance Funds (as defined below); and

WHEREAS, the City now desires, pursuant to the authority provided under the 2010 Resolution, to prepay the outstanding 2010 Bonds in whole, and by this resolution is authorizing such prepayment and the preparation and distribution of a notice to Hancock Whitney Bank, Jackson, Mississippi, as paying agent for the 2010 Bonds under the 2010 Bond Resolution (in such capacity, the "**2010 Paying Agent**") (the "**City Defeasance/Redemption Notice**"), a copy of which is attached hereto as **EXHIBIT A,** providing for (i) the defeasance of all outstanding

maturities of the 2010 Bonds maturing July 1 in the years 2019 through 2030, both inclusive (the "**Defeased 2010 Bonds**"), with the funds to be provided from the City (the "**City Defeasance Funds**"), and (ii) the optional redemption of such portion of the Defeased 2010 Bonds maturing July 1 in the years 2021 through 2030, both inclusive (the "**Callable 2010 Bonds**"), on July 1, 2020, at par; and

WHEREAS, as part of the transaction to provide for the defeasance of the Defeased 2010 Bonds and the redemption of the Callable 2010 Bonds, the City desires to enter into and to approve the form of and the execution of an Agreement to Contribute Funds (the "**Sacred Heart Contribution Agreement**") with Sacred Heart, wherein Sacred Heart agrees to reimburse the City for all of any expended City Defeasance Funds and whereby Sacred Heart agrees to pay to the City an amount of cash equal to at least the amount necessary to (i) fund the amounts required by the Escrow Agreement (defined below) to provide funds for the defeasance of the Defeased 2010 Bonds and the redemption of the Callable 2010 Bonds on July 1, 2020, and (ii) pay for the costs of such transaction (such total amount of cash from Sacred Heart being the "**Sacred Heart Defeasance Funds**"); and

WHEREAS, to accomplish the defeasance of the Defeased 2010 Bonds, the City further desires (i) to approve the form of and execution of the Escrow Agreement (the "**Escrow Agreement**"), by and between the City and Hancock Whitney Bank, Jackson, Mississippi, as escrow agent (in such capacity, the "**Escrow Agent**"), regarding the defeasance of the Defeased 2010 Bonds, and (ii) to appoint Hancock Whitney Bank, Jackson, Mississippi, as Escrow Agent, under the terms and provisions of the Escrow Agreement; and

WHEREAS, the City has determined that it is in the best interest of the City to deposit in trust with the Escrow Agent the City Defeasance Funds to effect the prepayment of the Defeased 2010 Bonds, which City Defeasance Funds will be sufficient to effectuate the defeasance of the Defeased 2010 Bonds and the optional redemption of the Callable 2010 Bonds on July 1, 2020, at par; and

WHEREAS, pursuant to the terms of the Sacred Heart Contribution Agreement, subject to the City's verification of the City's receipt of the lawfully available Sacred Heart Defeasance Funds under the Sacred Heart Contribution Agreement, the City agrees therein to and shall use the City Defeasance Funds to provide a payment to the Escrow Agent of all necessary cash requirements of the Escrow Agreement and will use all reasonable efforts to undertake the establishment of the Escrow Agreement and completion of the defeasance of the Defeased 2010 Bonds; provided, however, that the City will not pay any City Defeasance Funds for such defeasance to the Escrow Agent until such time as Sacred Heart has complied with the prerequisites set forth in the Sacred Heart Contribution Agreement, including the City's prior receipt of the Sacred Heart Defeasance Funds; and

WHEREAS, the City, under the terms and conditions of the Escrow Agreement, wishes to authorize each of the Structuring Agent (as defined below), or the Escrow Agent to make the initial application and final application to the Department of the Treasury, Bureau of Public Debt, Division of Special Investments, Parkersburg, West Virginia for United States Treasury Securities - State and Local Government Series (the "**SLGS**") to make provisions for the investment of funds as required under the Escrow Agreement; provided, however, that in the event the purchase of SLGS is unavailable or the purchase of open market securities is more beneficial to the City, the City also wishes to authorize the purchase of open market securities in connection with the investment requirements under the terms and conditions of the Escrow Agreement, as further provided herein.

NOW, THEREFORE, BE IT RESOLVED, DETERMINED AND ORDERED BY THE MAYOR AND CITY COUNCIL OF THE CITY, ACTING FOR AND ON BEHALF OF THE CITY, AS FOLLOWS:

SECTION 1. The Mayor and City Council (the "**Governing Body**") of the City, acting for and on behalf of the City, hereby authorize the defeasance of the Defeased 2010 Bonds by causing the prepayment of the Defeased 2010 Bonds with the City Defeasance Funds to the Escrow Agent under the Escrow Agreement, which prepayment proceeds for the Defeased 2010

Bonds with the City Defeasance Funds will be sufficient to effectuate the defeasance of the Defeased 2010 Bonds and the optional redemption of the Callable 2010 Bonds on July 1, 2020.

SECTION 2. Notwithstanding any provisions of Section 1 of this resolution, in accordance with the terms of the Sacred Heart Contribution Agreement, the City will not provide for the payment of any of the City Defeasance Funds to the Escrow Agent until the City has received all of the Sacred Heart Defeasance Funds and Sacred Heart otherwise performs any other obligations it may have under the Sacred Heart Contribution Agreement to the City's satisfaction.

SECTION 3. The Governing Body, acting for and on behalf of the City, hereby approves the form of and execution of the Sacred Heart Contribution Agreement, the form of which is attached hereto as **EXHIBIT B**. The Mayor of the City (the "**Mayor**"), the President of the City Council of the City (the "**President**"), the City Clerk of the City (the "**City Clerk**") and the City's Chief Financial Officer (the "**CFO**") are hereby authorized and directed to execute and deliver the Sacred Heart Contribution Agreement with such changes, insertions and omissions as may be approved by any such officer, said execution being conclusive evidence of such approval.

SECTION 4. The Governing Body, acting for and on behalf of the City, hereby approves the form of and execution of the Escrow Agreement, the form of which is attached hereto as **EXHIBIT C**. The Mayor, the President, the CFO and the City Clerk are hereby authorized and directed to execute and deliver the Escrow Agreement with such changes, insertions and omissions as may be approved by any such officer, said execution being conclusive evidence of such approval.

SECTION 5. The Governing Body hereby authorizes each of the Structuring Agent and the Escrow Agent to make the initial application and the final application with the Department of the Treasury, Bureau of Public Debt, Division of Special Investments, Parkersburg, West Virginia for SLGS in connection with the investment requirements under the terms and conditions of the Escrow Agreement.

SECTION 6. In the event the purchase of SLGS is unavailable or the purchase of open market securities is more beneficial to the City, the Governing Body hereby authorizes the purchase of open market securities in connection with the investment requirements under the terms and conditions of the Escrow Agreement, and authorizes the Mayor, the President, the City Clerk or CFO to execute any documents necessary and related to the purchase of open market securities, including (a) the engagement of Duncan-Williams, Inc., any affiliate thereof, or other agent as selected by the Mayor or the President (in either case, the "**Structuring Agent**"), to act for and on behalf of the City, if necessary, as escrow bidding agent for the open market escrow securities required by the Escrow Agreement, (b) the Mayor or President to provide approval of any award in connection with obtaining open market escrow securities, and (c) any other actions required to obtain open market escrow securities to complete the defeasance of the Defeased 2010 Bonds, including without limitation, the engagement of a verification agent in connection therewith.

SECTION 7. In connection with the transactions contemplated herein, the Governing Body hereby engages and appoints Government Consultants, Inc., as independent registered municipal advisor to the City, Butler Snow LLP, as special counsel to the City, the Structuring Agent for the City, Hancock Whitney Bank as Escrow Agent under the terms and provisions of the Escrow Agreement, and The Arbitrage Group, Inc., as verification agent, provided that the fees and expenses associated with the defeasance transactions contemplated herein and associated therewith are to be paid by the Escrow Agent under the Escrow Agreement from a portion of the City Defeasance Funds, which amounts will be reimbursed to the City from a portion of the Sacred Heart Defeasance Funds as provided in the Sacred Heart Contribution Agreement. In connection with the engagement of Butler Snow LLP, Government Consultants, Inc. and Duncan-Williams, Inc., the Mayor, the President, the City Clerk and the CFO are hereby authorized to execute the letters attached hereto as **EXHIBIT D**, **E** and **F**, respectively.

SECTION 8. The Mayor, the President and the CFO are hereby authorized to execute a requisition and perform such other acts as may be necessary to authorize the payment by the Escrow Agent under the Escrow Agreement of the fees and expenses associated with the defeasance transactions; provided however the total fees and expense associated with the defeasance shall not exceed $30,000.

SECTION 9. The Mayor, the President, the City Clerk and the CFO are further authorized and directed to execute and deliver any additional notices, documents and certificates which are required in connection with effectuating the purposes of this resolution, including the defeasance and redemption of the Defeased 2010 Bonds and the Callable 2010 Bonds, and to make any final determinations as the particular maturities or portions of maturities of the 2010 Bonds that are to be included within the definition of the Defeased 2010 Bonds, as market conditions provide, without the necessity to obtain further approval from the Governing Body.

SECTION 10. The City is hereby authorized and directed to provide a certified copy of this resolution to the 2010 Paying Agent and to the Escrow Agent.

The above and foregoing Resolution, after having been first reduced to writing, was introduced by Council Member Delgado seconded by Council Member George, and was adopted by the following vote, to wit:

YEAS:	**NAYS:**	**ABSENT:**
George	**None**	**None**
Delgado		
Carroll		
Dryden		
Brown		

The motion having received the affirmative vote of the Governing Body, the President of the City Council declared the motion carried and the resolution adopted, on this the **7th** day of **August, 2018**.

[SEAL]

ATTEST: **ADOPTED:**

CLERK OF COUNCIL **PRESIDENT OF COUNCIL**

The above and foregoing Resolution having been submitted to and approved by the Mayor, this the **7th** day of **August, 2018**.

ATTEST: **APPROVED:**

CITY CLERK **MAYOR**

EXHIBIT A

COPY OF CITY DEFEASANCE/REDEMPTION NOTICE

MAYOR
Toby Barker

COUNCIL - WARD ONE *Jeffrey George*
COUNCIL - WARD TWO *Deborah Denard Delgado*
COUNCIL - WARD THREE *Carter Carroll*
COUNCIL - WARD FOUR *Mary Dryden*
COUNCIL - WARD FIVE *Nicholas Brown*

Hancock Whitney Bank
1855 Lakeland Drive, Suite Q-230
Jackson, MS 39201
Attention: Corporate Trust Department

RE: Defeasance of all outstanding maturities of the City of Hattiesburg, Mississippi Taxable General Obligation Refunding Bonds, Series 2010, dated July 15, 2010 (the "**2010 Bonds**"), issued in the original aggregate principal amount of $2,560,000, maturing July 1 in the years 2019 through 2030 (the "**Defeased 2010 Bonds**") and the redemption of the Defeased 2010 Bonds maturing July 1 in the years 2021 through 2030 (the "**Callable 2010 Bonds**")

Ladies and Gentlemen:

The Mayor and City Council ("**Governing Body**") of the City of Hattiesburg, Mississippi, acting for and on behalf of the City of Hattiesburg, Mississippi (the "**Issuer**"), adopted a resolution on August 7, 2018 which authorized the defeasance of the Defeased 2010 Bonds and the Issuer does hereby irrevocably exercise its option to call for redemption of the Callable 2010 Bonds effective July 1, 2020, at par, and hereby directs Hancock Whitney Bank, Jackson, Mississippi, the paying agent for the 2010 Bonds (in such capacity, the "**2010 Paying Agent**"), to take any action required under the Issuer's Bond Resolution dated June 8, 2010, as amended July 6, 2010 (the "**Bond Resolution**"), including, without limitation, the giving of notice thereunder, to accomplish such redemption. Such optional redemption shall be carried out in accordance with the provisions of the Bond Resolution and the 2010 Paying Agent is hereby authorized to utilize funds provided to the 2010 Paying Agent by Hancock Whitney Bank, in its capacity as escrow agent (the "**Escrow Agent**"), from the funds held under an escrow agreement by and between the Issuer and the Escrow Agent (the "**Escrow Agreement**"), said Escrow Agreement being funded from funds of the Issuer.

From the date of execution of the Escrow Agreement, the 2010 Paying Agent shall provide for the debt service due on the Defeased 2010 Bonds and the funds for the optional redemption of the Callable 2010 Bonds from the funds provided to the 2010 Paying Agent from the Escrow Agent pursuant to funds held under the Escrow Agreement.

It is the responsibility of the 2010 Paying Agent to assure that all publications and form of redemption notices conform to the requirements of the Bond Resolution.

Sincerely,

Mayor
City of Hattiesburg, Mississippi

cc: Municipal Securities Rulemaking Board
(via website) at www.emma.msrb.org

42422837.v3

EXHIBIT B

FORM OF SACRED HEART CONTRIBUTION OF FUNDS AGREEMENT

AGREEMENT TO CONTRIBUTE FUNDS
Sacred Heart Bonds Defeasance

THIS AGREEMENT is made by and between **SACRED HEART CATHOLIC PARISH** ("**Sacred Heart**") and the **CITY OF HATTIESBURG, MISSISSIPPI** (the "**City**"), a municipality of the State of Mississippi, acting by and through its duly elected and serving Mayor and City Council.

WITNESSETH:

WHEREAS, on December 22, 2008, the City entered into a loan with the Mississippi Development Bank (the "**2008 Loan**") which provided funds to erect and purchase municipal buildings in the City, and purchase land therefor, and repair, improve, adorn and equip same, and for other authorized purposes under Mississippi Code of 1972, Section 31-25-1 *et seq.,* as amended and supplemented from time to time (the "**Original Project**"); and

WHEREAS, on July 15, 2010, the City issued its $2,560,000 (original principal amount) Taxable General Obligation Refunding Bonds, Series 2010, dated July 15, 2010 (the "**Bonds**"), the proceeds of which were used to refinance the 2008 Loan, and there remains outstanding $1,810,000 in aggregate principal amount of the Bonds; and

WHEREAS, the Bonds were issued pursuant to a resolution of the City Council of the City adopted June 8, 2010, as amended July 6, 2010 (the "**2010 Bond Resolution**"); and

WHEREAS, on June 8, 2010 the City entered into a Purchase and Sales Agreement with Sacred Heart Catholic Parish ("**Sacred Heart**") pursuant to which Sacred Heart makes payments to the City for use and purchase of the Original Project; and

WHEREAS, Sacred Heart has informed that City that Sacred Heart has earned and maintains on deposit an amount of cash necessary to prepay and defease the Bonds under the Bonds and the Bond Resolution; and

WHEREAS, the City has determined to defease the Bonds using funds provided by Sacred Heart; and

WHEREAS, the City desires, pursuant to the authority provided under the Act, the Bonds and the Bond Resolution, to defease the Bonds in whole, and has prepared and distributed a notice to Hancock Whitney Bank, as paying agent for the Bonds (in such capacity, the "**Paying Agent**") providing for (i) the defeasance of all outstanding maturities of the Bonds maturing July 1 in the years 2019 through 2030, both inclusive (the "**Defeased Bonds**"), with the proceeds of the funds to be provided from Sacred Heart, and (ii) the optional redemption of the Defeased Bonds maturing July 1 in the years 2021 through 2030, both inclusive (the "**Callable Bonds**"), on July 1, 2020, at par; and

WHEREAS, to effect the prepayment to or for the benefit of the holders of the Bonds, the City has approved the form of and execution of an Escrow Agreement (the "**Escrow Agreement**"), by and

between the City and Hancock Whitney Bank, Jackson, Mississippi, as escrow agent (in such capacity, the "**Escrow Agent**"), regarding the defeasance of the Defeased Bonds and the redemption of the Callable Bonds; and

WHEREAS, the City and Sacred Heart, in accordance with the Purchase and Sales Agreement, desire to, and hereby do, enter into this Agreement to Contribute Funds (this "**Agreement**") wherein Sacred Heart agrees to pay to the City to or for the benefit of the holders of the Bonds an amount of cash equal to at least the amount necessary to (a) fund the amounts required by the Escrow Agreement to provide for the defeasance of the Defeased Bonds and the redemption of the Callable Bonds on July 1, 2020, and (b) pay for the costs of such transaction.

NOW, THEREFORE, FOR AND IN CONSIDERATION of the above and the mutual covenants and promises contained herein, the City and Sacred Heart do hereby agree as follows:

1. **DURATION:** This Agreement shall be in force and effect until all outstanding Bonds are finally paid in full upon the final termination of the Escrow Agreement.

2. **PURPOSE:** The purpose of this Agreement is to define the responsibilities of the City and Sacred Heart with respect to the defeasance of the Defeased Bonds and the redemption of the Callable Bonds and the payment of the costs thereof.

3. **STATUTORY AUTHORITY:** The City and Sacred Heart are authorized to fulfill the terms of this Agreement under the authority of §§21-17-1, *et seq.*, Mississippi Code of 1972, as amended.

4. **DEFEASANCE PROJECT:** The "Defeasance Project" shall consist of (a) funding the Escrow Agreement in the amounts required thereby to defease the Defeased Bonds and redeem the Callable Bonds on July 1, 2020, at par, and (b) payment of all costs associated therewith.

5. **ADMINISTRATION:** This Agreement shall be administered as an undertaking of Sacred Heart to the City. A separate entity is not created under this Agreement.

(1) **City Obligations**. The City shall have the following obligations and responsibilities:

a. The City is designated as the legal entity assigned the responsibility for administration of this joint undertaking, and the Mayor of the City and the City's Chief Financial Officer are each hereby designated as the officers to receive, disburse and account for the funds of the undertaking in the manner prescribed by law.

b. The City will enter into the Escrow Agreement with the Escrow Agent, and, as between the City and Sacred Heart, the City will be the party obligated to ensure that all City approvals are undertaken and professionals employed in order to effect the Defeasance Project, including, without limitation, the adoption of appropriate resolutions and such other procedures and documents and distribution of notices as may be required of the City by the Bond Resolution.

c. Payment of the principal of and interest on the Defeased Bonds will be secured and provided for by a pledge of the funds and securities within the Escrow Agreement. Subject to the City's verification of the City's receipt of the lawfully available Sacred Heart Defeasance Funds (as defined herein below) under this Agreement, the City agrees to and shall use its own funds (the "**City Defeasance Funds**") to provide a payment to the Escrow Trustee of all necessary cash requirements of the Escrow Agreement and will use all reasonable efforts to undertake the establishment of the Escrow Agreement and completion of the Defeasance Project; provided, however, that the City will not pay any City Defeasance Funds for the Defeasance Project to the Escrow Agent until such time as Sacred Heart has complied with the prerequisites set forth herein, including the City's prior receipt of the Sacred Heart Defeasance Funds (defined below).

d. "Sacred Heart Defeasance Funds" shall mean the amount of _____ Million _____ Thousand Dollars ($_____) cash of Sacred Heart to be paid by Sacred Heart to the City for use by the City as a reimbursement to the City for City's payment of the City Defeasance Funds to the Escrow Agent.

e. Costs of the Defeasance Project including, but not limited to, the fees and expenses thereof, will be paid from the proceeds of the City Defeasance Funds deposited with the Escrow Agent in the Escrow Agreement, provided that all such costs shall be reimbursed to the City from the Sacred Heart Defeasance Funds.

f. The City hereby agrees to pay to Sacred Heart any amount of the Sacred Heart Defeasance Funds that are or were in excess of the amounts required to be provided for the Defeasance Project and which remain on deposit with the City following the complete funding of the Escrow Agreement (including the professional and other costs associated therewith), which payment of such excess funds, if any, the City shall make to Sacred Heart within seven (7) business days following the funding of date of funding of the Escrow Agreement.

(2) **Sacred Heart Obligations.** Sacred Heart shall have the following obligations and responsibilities:

a. Sacred Heart hereby agrees to execute any instruments consistent with this Agreement as may be reasonably necessary and required by the City or the City's Bond Counsel for the implementation and completion of the Defeasance Project and payment of the costs thereof.

b. Sacred Heart shall provide for the payment of all of the Sacred Heart Defeasance Funds to the City no later than the date the City is to provide its verbal award to purchase securities to fund the Escrow Agreement (the "**Sacred Heart Funding Date**"). Any payment by Sacred Heart of the Sacred Heart Defeasance Funds on the Sacred Heart Funding Date to the City shall be in such form and paid to such account as may be directed by the Mayor or Chief Financial Officer, so as to ensure that the Sacred Heart Defeasance Funds are on deposit with the City prior to the Sacred Heart Funding Date.

c. Sacred Heart hereby agrees that once paid to the City, Sacred Heart shall completely relinquish and have no rights to any of the Sacred Heart Defeasance Funds.

d. Following the funding of the Escrow Agreement, if it is determined that any deficiencies exist in the amounts deposited in the Escrow Agreement, Sacred Heart agrees to pay the City any and all amounts necessary to cure any such deficiencies.

5. **PAYMENTS FOR THE BENEFIT OF HOLDERS.** All payments, including, without limitation, the payment from Sacred Heart to the City of the Sacred Heart Defeasance Funds, the payment from the City to the Paying Agent or the Escrow Agent of the City Defeasance Funds, and the payment from the Paying Agent and Escrow Agent to the holders of the Bonds under the Escrow Agreement, all as referenced herein, shall for all purposes be considered transfers of property to the holders of the Bonds on account of such Bonds.

6. **AMENDMENT:** This Agreement may be amended only by mutual written consent of Sacred Heart and the City.

7. **EFFECTIVE DATE:** This Agreement shall become effective from and after the date it has been approved by the governing authorities of Sacred Heart and the City and executed by the parties hereto using multiple counterparts.

[The remainder of this page is intentionally left blank; signature page to follow.]

THIS AGREEMENT TO CONTRIBUTE FUNDS ENTERED into this the 7th day of August, 2018.

CITY OF HATTIESBURG, MISSISSIPPI

By:_____
Mayor

ATTEST:

By:_____
City Clerk

SACRED HEART CATHOLIC PARISH

By:_____
Authorized Signatory

ATTEST:

_____

Signature page to the Agreement to Contribute Funds dated _____ ___, 2018 between the City of Hattiesburg, Mississippi and the Sacred Heart Catholic Parish.

42458593.v4

EXHIBIT C

FORM OF ESCROW AGREEMENT

ESCROW AGREEMENT

By and between

THE CITY OF HATTIESBURG, MISSISSIPPI

AND

HANCOCK WHITNEY BANK
Jackson, Mississippi,
As Escrow Agent

Dated ___, 2018

FOR:

$2,560,000
(original aggregate principal amount)
CITY OF HATTIESBURG, MISSISSIPPI
TAXABLE GENERAL OBLIGATION REFUNDING BONDS, SERIES 2010
Dated July 15, 2010

This **ESCROW AGREEMENT** (this "**Agreement**") is made and entered into ___, 2018, by and between **THE CITY OF HATTIESBURG, MISSISSIPPI** (the "**City**") and **HANCOCK WHITNEY BANK,** Jackson, Mississippi, as escrow agent hereunder (in such capacity, the "**Escrow Agent**"):

WITNESSETH:

WHEREAS, the City has heretofore issued its $2,560,000 Taxable General Obligation Refunding Bonds, Series 2010, dated July 15, 2010 (the "**2010 Bonds**"), issued under a pursuant to a resolution of the Mayor and City Council of the City adopted on June 8, 2010, as amended July 6, 2010 (the "**Bond Resolution**"); and

WHEREAS, the City has determined that it is in its best interest to provide funds for the defeasance of all of the outstanding maturities of the 2010 Bonds maturing July 1, 2019 through July 1, 2030, both inclusive, as identified on **SCHEDULE B** hereto (together, the "**Defeased 2010 Bonds**"), and the optional redemption of the Defeased 2010 Bonds maturing July 1 in the years 2021 through 2030, both inclusive (the "**Callable 2010 Bonds**"), on July 1, 2020 (the "**Callable 2010 Bonds Redemption Date**") at par; and

WHEREAS, pursuant to the Bond Resolution the liens, rights and interest granted by the Bond Resolution to the Defeased 2010 Bonds shall cease, determine and become null and void upon the deposit in trust with the Escrow Agent of either moneys in an amount which shall be sufficient, SLGS and/or U. S. Obligations (as such terms are hereinafter defined) (together, as applicable, the "**Escrowed Securities**"), the principal of and the interest on which when due will provide moneys which, together with the moneys, if any, deposited with the Escrow Agent at the same time, will be sufficient to pay the interest due and principal to become due on the Defeased 2010 Bonds on and prior to the Callable 2010 Bonds Redemption Date, and to pay the principal due for the Callable 2010 Bonds on or before the Callable 2010 Bonds Redemption Date, at par; and

WHEREAS, the City has determined that it is in the best interest of the City to deposit in trust with the Escrow Agent the Escrowed Securities the principal of and the interest on which when due will provide moneys which, together with cash, if any, deposited with the Escrow Agent at the same time, will be sufficient, to pay the interest due and principal to become due on the Defeased 2010 Bonds on or before the Callable 2010 Bonds Redemption Date, and to pay the principal due for the Callable 2010 Bonds on or before the Callable 2010 Bonds Redemption Date, at par; and

WHEREAS, in order to deposit such amount of moneys and Escrowed Securities in trust, the City has caused its cash funds in the amount of $_____ (the "**City Equity**") to be deposited with the Escrow Agent under this Agreement and used by the Escrow Agent to provide funds for (i) the defeasance of the Defeased 2010 Bonds and redemption of the Callable 2010 Bonds (together, the "**Defeasance Project**"), and (ii) pay the costs associated with the Defeasance Project; and

WHEREAS, a portion of the funds comprising the City Equity will be applied to the purchase of certain Escrowed Securities identified on **SCHDEDULE A** hereto, which principal

amount of Escrowed Securities will mature and produce investment income and earnings at such times and in such amounts together with certain amounts held in cash as will be sufficient to pay when due all of the principal of, redemption premium, if any, and interest on the Defeased 2010 Bonds including the redemption price of the Callable 2010 Bonds; and

WHEREAS, in order to provide for the proper and timely application of the moneys deposited in said trust, the maturing principal amount of the Escrowed Securities purchased or transferred thereby and investment income and earnings derived therefrom to the payment of the Defeased 2010 Bonds, it is necessary to enter into this Agreement with the Escrow Agent on behalf of the holders from time to time of the Defeased 2010 Bonds; and

WHEREAS, the City has authorized the Escrow Agent to pay certain costs of the Defeasance Project from a certain portion of the funds comprising the City Equity in the amount of $_____.00 (the "**2018 Costs of Defeasance Funds**") for deposit in the 2018 Costs of Defeasance Fund (the "**2018 Costs of Defeasance Fund**") to be held by the Escrow Agent under this Agreement.

NOW, THEREFORE, the City by approving this Agreement, in consideration of the foregoing and the mutual covenants herein set forth and in order to secure the payment of the principal of, redemption premium, if any, and interest on all of the Defeased 2010 Bonds according to their respective tenor and effect, does by these presents hereby grant, warrant, demise, release, convey, assign, transfer, alienate, pledge, set over and confirm, unto the Escrow Agent, and its successors in the trusts hereby created, and to it and its assigns forever, all and singular, the property hereinafter described, to wit:

DIVISION I

All right, title and interest in and to any funds deposited herewith in the Escrow Fund ($_____) derived from a portion of the funds comprising of the City Equity.

DIVISION II

All right, title and interest in and to all income, earnings and increment derived from or accruing to the Escrowed Securities purchased from the money described in DIVISION I hereof and more particularly described in **SCHEDULE A**, attached hereto and made a part hereof.

DIVISION III

Any and all other property which is by the express provisions of this Agreement required to be subject to the pledge hereof and any additional property of every kind and nature, from time to time hereafter, by delivery or by writing of any kind, conveyed, pledged, assigned or transferred as and for additional security hereunder, by the City or by anyone on their respective behalf, and the Escrow Agent is hereby authorized to receive the same at any time as additional security hereunder.

TO HAVE AND TO HOLD, all and singular, the trust estate, including all additional property which by the terms hereof has or may become subject to the encumbrances of this Agreement, unto the Escrow Agent, and its successors and assigns, forever in trust, however, for

the benefit and security of the holders from time to time of the Defeased 2010 Bonds (except for the 2018 Costs of Defeasance Funds); but if the Defeased 2010 Bonds shall be fully and promptly paid when due, in accordance with the terms thereof and hereof, then this Agreement shall be and become void and of no further force and effect, otherwise the same shall remain in full force and effect, and upon the trusts and subject to the covenants and conditions hereinafter set forth.

ARTICLE I

DEFINITIONS

SECTION 1.01 DEFINITIONS. In addition to words and terms elsewhere defined in this Agreement, the following words and terms as used in this Agreement shall have the following meanings, unless some other meaning is plainly intended.

"Agreement" shall mean this Escrow Agreement, dated ___, 2018, by and between the City and the Escrow Agent.

"Authorized Newspaper" shall mean a newspaper or financial journal of general circulation in New York, New York, printed in the English language, being customarily published on each business day whether or not published on Saturdays, Sundays or holidays, such as The Bond Buyer.

"Bond Resolution" shall mean the Bond Resolution of the City adopted June 8, 2010 as amended July 6, 2010, pursuant to which the Defeased 2010 Bonds were issued and are secured.

"City" shall mean the City of Hattiesburg, Mississippi.

"Defeasance Resolution" shall mean the Resolution of the Mayor and City Council of the City dated August 7, 2018, pursuant to which the City authorized the defeasance of the Defeased 2010 Bonds using the City Equity.

"Escrowed Securities" shall mean together the SLGS and U. S. Obligations, as applicable.

"2010 Paying Agent" shall mean the paying agent under the Bond Resolution for the Defeased 2010 Bonds, which at the date of this Agreement is Hancock Whitney Bank, Jackson, Mississippi.

"SLGS" shall mean United States Treasury Securities - State and Local Government Series.

"Trust Estate", "trust estate" or "pledged property" shall mean the property, rights and interest of the City which are subject to the lien of this Agreement, but which does not include the 2018 Costs of Defeasance Fund.

"U. S. Obligations" shall mean the direct obligations of the United States of America Treasury or such other federal securities which are Government Obligations under the Bond Resolution.

"Written Request" with respect to the City shall mean a request in writing signed by the Mayor of the City or the President of the City Council of the City, or by any other officer of the City duly authorized and satisfactory to the Escrow Agent.

Words of the masculine gender shall be deemed and construed to include correlative words of the feminine and neuter genders. Words importing the singular number shall include the plural number and vice versa unless the context shall otherwise indicate. The word "person" shall include corporations, associations, natural persons and public bodies unless the context shall otherwise indicate. Reference to a person other than a natural person shall include its successors.

ARTICLE II

ESTABLISHMENT OF FUNDS; FLOW OF FUNDS

SECTION 2.01 CREATION OF FUNDS. There are hereby created and established with the Escrow Agent a special and irrevocable trust fund designated the 2010 Escrow Fund (the "**Escrow Fund**") and a 2018 Costs of Defeasance Fund (the "**2018 Costs of Defeasance Fund**"), each to be held in the custody of the Escrow Agent separate and apart from other funds of the City and the Escrow Agent. The Escrow Fund and the 2018 Costs of Defeasance Fund shall be administered pursuant to this Agreement.

The City herewith deposits or causes to be deposited with the Escrow Agent, and the Escrow Agent acknowledges receipt of, immediately available moneys in the amount of $_____ (the "**Escrow Requirement**") from a portion of the funds comprising the City Equity to be deposited by the Escrow Agent to the Escrow Fund, and the amount of the 2018 Costs of Defeasance Funds from a portion of the funds comprising the City Equity to be deposited by the Escrow Agent into the 2018 Costs of Defeasance Fund. As set forth in the verification report (the "**Verification Report**") of The Arbitrage Group, Inc. (the "**Verification Agent**"), delivered on ___, 2018, to the City and the Escrow Agent, the amount of the Escrow Requirement will be sufficient to purchase the Escrowed Securities, which will mature in principal amounts and earn income and earnings at such times, all as described in **SCHEDULE A**, so that sufficient moneys will be available to pay (i) the interest due and principal payable on the Defeased 2010 Bonds each January 1 and July 1, commencing January 1, 2019 through and including July 1, 2020, and (ii) to pay the principal outstanding of the Callable 2010 Bonds on the Callable 2010 Bonds Redemption Date at par.

The Verification Agent will verify that the deposit in the Escrow Fund of the Escrow Requirement to purchase the Escrowed Securities will produce sufficient funds to pay interest due and principal payable on the Defeased 2010 Bonds until July 1, 2020, and to redeem on said date all of the Callable 2010 Bonds maturing thereafter, all of which have been called for redemption on said date, at par.

The 2018 Costs of Defeasance Funds shall be used to pay costs of the Defeasance Project as provided in Section 2.10 hereof.

SECTION 2.02 IRREVOCABLE TRUST CREATED. The deposit of moneys for the Escrow Requirement and Escrowed Securities in the Escrow Fund shall constitute an irrevocable deposit of such moneys and Escrowed Securities for the benefit of the holders of the Defeased 2010 Bonds, except as provided herein with respect to amendments permitted under Section 4.01 hereof. The holders of the Defeased 2010 Bonds shall have an express lien on all moneys and principal of and earnings on the Escrowed Securities deposited in the Escrow Fund until applied in accordance with this Agreement. The matured principal of the Escrowed Securities and the interest thereon shall be held in trust by the Escrow Agent, and shall be transferred in the necessary amounts as hereinafter set forth in Section 2.05 to the 2010 Paying Agent for the payment of interest and principal on the Defeased 2010 Bonds as the same becomes due and payable and to the payment of the principal outstanding of the Callable 2010 Bonds on the Callable 2010 Bonds Redemption Date.

SECTION 2.03 PURCHASE OF ESCROWED SECURITIES. The Escrow Agent is hereby directed to purchase immediately the Escrowed Securities listed on **SCHEDULE A**. The Escrow Agent shall purchase the Escrowed Securities solely from the Escrow Requirement moneys deposited in the Escrow Fund. The Escrow Agent shall apply the moneys deposited in the Escrow Fund, and the Escrowed Securities purchased therewith, together with all income or earnings thereon, in accordance with the provisions hereof. The Escrow Agent shall have no power or duty to invest any moneys held hereunder or to make substitutions of the Escrowed Securities held hereunder or to sell, transfer or otherwise dispose of the Escrowed Securities acquired hereunder except as provided in this Agreement.

SECTION 2.04 SUBSTITUTION OF OBLIGATIONS. Notwithstanding any other provision of this Agreement, at the Written Request of the City, and upon compliance with the conditions hereinafter stated, the Escrow Agent shall have the power to sell, transfer, otherwise dispose of or request the redemption of the Escrowed Securities held hereunder and to substitute therefor other Escrowed Securities; provided, however, the foregoing may be effected only if: (i) the substitution of the Escrowed Securities for the substituted Escrowed Securities occurs simultaneously; (ii) the amounts of and dates on which the anticipated transfers from the Escrow Fund to the 2010 Paying Agent for the payment of principal of, redemption premium, if any, and interest on the Defeased 2010 Bonds, will not be diminished or postponed thereby; (iii) the Escrow Agent shall receive from a nationally recognized independent certified public accountant firm a certification, that, immediately after such substitution, the principal of and the interest on the Escrowed Securities in the Escrow Fund when due and paid will, together with any other moneys held for such purpose, be sufficient to pay the principal of, redemption premium, if any, and interest on the Defeased 2010 Bonds, when due, in accordance with this Agreement; and (iv) the Escrow Agent shall receive an opinion from Butler Snow LLP, or from any other nationally recognized attorneys on the subject of municipal bonds, to the effect that the disposition and substitution or purchase of such Escrowed Securities is not inconsistent with the statutes and regulations applicable to the 2010 Bonds and that the conditions of this Section 2.04 have been satisfied. Any surplus moneys resulting from the sale, transfer, other disposition or redemption of the Escrowed Securities held hereunder and the substitutions therefor of Escrowed Securities shall be released from the Trust Estate and shall be transferred to the City.

The Escrow Agent shall purchase such substituted Escrowed Securities with the proceeds derived from the maturity, sale, transfer, disposition or redemption of the Escrowed Securities held hereunder or from other moneys available.

SECTION 2.05 TRANSFERS FROM ESCROW FUND. As the principal of the Escrowed Securities set forth in **SCHEDULE A** (subject to the reinvestment, if any, of the principal and interest made pursuant to Section 2.06 and the application of investment earnings in accordance with Section 2.06), shall mature and be paid, and the investment income and earnings thereon are paid, the Escrow Agent shall, no later than each interest payment date for the Defeased 2010 Bonds, transfer from the Escrow Fund to the 2010 Paying Agent for the Defeased 2010 Bonds amounts sufficient to pay the interest and principal on the Defeased 2010 Bonds coming due on each interest payment date and to pay the principal, as applicable, outstanding of the Callable 2010 Bonds on the Callable 2010 Bonds Redemption Date, all as set forth in **SCHEDULE B** hereto. Such amounts shall be applied by the 2010 Paying Agent to the payment of all principal of, redemption premium, if any, and interest on the Defeased 2010 Bonds for the equal and ratable benefit of the holders of the Defeased 2010 Bonds. Currently, principal, redemption premium, if any, and interest on the Defeased 2010 Bonds are payable at the principal office of the 2010 Paying Agent in Jackson, Mississippi.

SECTION 2.06 INVESTMENT OF CERTAIN MONEYS REMAINING IN TRUST FUNDS. Any moneys remaining from time to time in the Escrow Fund until such time that they are needed may be invested and reinvested in Escrowed Securities maturing no later than the next interest payment date or Callable 2010 Bonds Redemption Date of the Defeased 2010 Bonds, or such periods or at such interest rates that the Escrow Agent shall be directed to invest by a Written Request of the City. In addition, the Escrow Agent shall receive from a nationally recognized independent certified public accounting firm a certification that, immediately after such transaction, the principal of and the interest on the Escrowed Securities in the Escrow Fund when due and paid will, together with any other moneys held for such purpose, be sufficient to pay the principal of, redemption premium, if any, and interest on the Defeased 2010 Bonds, when due. Any interest income, earnings or gain resulting from such reinvestment of moneys shall be released from the Trust Estate and transferred to the City. To the extent amounts are not reinvested in accordance with the provisions of this Section 2.06, such amounts shall be held uninvested as provided in the Verification Report.

SECTION 2.07 FUNDS AND ACCOUNTS CONSTITUTE TRUST FUNDS. All the funds and accounts created and established pursuant to this Agreement shall be and constitute trust funds for the purposes provided in this Agreement and shall be kept separate and distinct from all other funds of the City and the Escrow Agent and used only for the purposes and in the manner provided in this Agreement.

SECTION 2.08 TRANSFER OF FUNDS AFTER ALL PAYMENTS REQUIRED BY THIS AGREEMENT ARE MADE. After all of the transfers by the Escrow Agent to the 2010 Paying Agent for payment of the principal of, redemption premium, if any, and interest on the Defeased 2010 Bonds have been made, all remaining moneys and Escrowed Securities, together with any income and interest thereon, in the Escrow Fund shall be transferred by the Escrow Agent to the City; provided, however, that no such transfer shall be made until all of the

principal of, redemption premium, if any, and interest on the outstanding Defeased 2010 Bonds have been paid in full.

SECTION 2.09 DEFEASANCE NOTICE, REDEMPTION NOTICE AND ADDITIONAL NOTICES. The City hereby directs the Escrow Agent, and the Escrow Agent hereby agrees, to cause to be prepared and published in the form thereof as attached hereto as **SCHEDULE C**, within 30 days after the Escrowed Securities are deposited with it, and at the expense of the City (subject to Section 3.10 hereof) a notice to the holders of the Defeased 2010 Bonds setting forth that the irrevocable deposit of moneys and investment thereof has been made in accordance with the Bond Resolution, and respectively, (i) that all the Callable 2010 Bonds maturing on or after July 1, 2021 will be redeemed on July 1, 2020 at a redemption price of par, (ii) a description of the Escrowed Securities so held by it, and (c) that the lien of the Bond Resolution on the Defeased 2010 Bonds has been released in accordance with the provisions of the Bond Resolution.

The City hereby directs the Escrow Agent, and the Escrow Agent hereby agrees, (a) to redeem in accordance with the Bond Resolution all of the Callable 2010 Bonds outstanding under the Bond Resolution as of July 1, 2020; and (b) to cause to be prepared and published or mailed, as the case may be, in connection with the redemption of the Defeased 2010 Bonds under the Bond Resolution, or required or recommended, from time to time, by the Securities and Exchange Commission (in accordance with the standards endorsed by the Securities and Exchange Commission in Release 34-2385, issued December 3, 1986) and by the Municipal Securities Rulemaking Board, to the extent applicable.

SECTION 2.10 APPLICATION OF 2018 COSTS OF DEFEASANCE FUNDS. Proceeds of the City Equity deposited to the 2018 Costs of Defeasance Fund in the amount of $_____.00 representing the 2018 Costs of Defeasance Funds will be used by the Escrow Agent to pay invoices submitted to the Escrow Agent for and on behalf of the City regarding costs of the Defeasance Project. Any portion of the 2018 Costs of Defeasance Funds remitted to the Escrow Agent for the payment of the costs of the Defeasance Project and not used to pay such costs of within sixty (60) days of the execution of this Agreement shall be transferred to the City. The 2018 Costs of Defeasance Funds will remain uninvested until used to pay costs of the Defeasance Project or remitted to the City under the provisions herein provided. The 2018 Costs of Defeasance Funds shall be segregated from other moneys deposited in the Escrow Fund and held in a separate account to be used for the payment of costs of the Defeasance Project expenses as authorized by the City in the Defeasance Resolution.

ARTICLE III

CONCERNING THE ESCROW AGENT

SECTION 3.01 APPOINTMENT OF THE ESCROW AGENT. The City hereby appoints Hancock Whitney Bank, Jackson, Mississippi, as the Escrow Agent under this Agreement.

SECTION 3.02 ACCEPTANCE BY ESCROW AGENT. By execution of this Agreement, the Escrow Agent accepts the duties and obligations as Escrow Agent hereunder.

The Escrow Agent further represents that it has all requisite power, and has taken all corporate actions necessary to execute the trust hereby created.

SECTION 3.03 LIABILITY OF ESCROW AGENT. The Escrow Agent shall not be liable in connection with the performance of its duties hereunder except for its own negligent action, its own negligent failure to act or its own willful misconduct.

The Escrow Agent shall not be liable for any loss resulting from any investment made pursuant to the terms and provisions of this Agreement. The Escrow Agent shall have no lien, security interest or right of set-off whatsoever upon any of the moneys or investment in the Escrow Fund for the payment of fees and expenses for services rendered by the Escrow Agent under this Agreement or for any other amounts owed to the Escrow Agent.

The Escrow Agent shall not be liable for the accuracy of the calculations as to the sufficiency of moneys and of the principal amount of the Escrowed Securities and the earnings thereon to pay the Defeased 2010 Bonds. So long as the Escrow Agent applies any moneys, the Escrowed Securities and the interest earnings therefrom to pay the Defeased 2010 Bonds as provided herein, and complies fully with the terms of this Agreement, the Escrow Agent shall not be liable for any deficiencies in the amounts necessary to pay the Defeased 2010 Bonds caused by such calculations.

In the event of the Escrow Agent's failure to account for any of the Escrowed Securities or moneys received by it, such Escrowed Securities or moneys shall be and remain the property of the City in trust for the holders of the Defeased 2010 Bonds as herein provided.

SECTION 3.04 PERMITTED ACTS. The Escrow Agent and its officers and directors may acquire and hold, or become the owner or pledge of or may deal in the Defeased 2010 Bonds as fully and with the same rights as if it were not the Escrow Agent.

SECTION 3.05 RESIGNATION OF ESCROW AGENT. The Escrow Agent or any successor escrow agent, at the time acting hereunder, may at any time resign and be discharged from the duties and obligations of the trust hereby created by giving 60 days' written notice to the City and by giving to the registered holders of the Defeased 2010 Bonds notice of such resignation by first class mail. Upon receiving such notice of resignation, the City shall promptly appoint a successor escrow agent by an instrument in writing.

SECTION 3.06 REMOVAL OF ESCROW AGENT. Upon the Written Request of the City the Escrow Agent may be removed at any time if (i) the Escrow Agent shall cease to be eligible in accordance with the provisions set forth herein and shall fail to resign after Written Request therefor from the City or from any registered holder of the Defeased 2010 Bonds who has been a bona fide holder of a defeased bond for at least six (6) months, or (ii) the Escrow Agent shall become incapable of acting or shall be adjudged a bankrupt or insolvent or a receiver of the Escrow Agent or of its property shall be appointed, or any public officer shall take charge or control of the Escrow Agent or of its property or affairs for the purpose of rehabilitation, conservation or liquidation.

The Escrow Agent may also be removed by the registered holders of the Defeased 2010 Bonds of a majority in aggregate principal amount of each the Defeased 2010 Bonds at the time

outstanding by an instrument or concurrent instruments in writing signed by such registered holders of the Defeased 2010 Bonds.

Any removal of the Escrow Agent and appointment of a successor escrow agent in accordance with the provisions set forth herein shall become effective upon acceptance of appointment by the successor escrow agent as provided herein.

SECTION 3.07 APPOINTMENT OF SUCCESSOR ESCROW AGENT. If no successor escrow agent shall have been appointed and shall have accepted such appointment within thirty (30) days after such notice of resignation, the resigning escrow agent may petition any court of competent jurisdiction for the appointment of a successor escrow agent, or any registered holder of the Defeased 2010 Bonds who has been a bona fide holder for at least six (6) months may, on behalf of itself and others similarly situated, petition any such court for the appointment of a successor escrow agent. Such court may thereupon, after such notice, if any, as it may deem proper and prescribed, appoint a successor escrow agent. Any resignation by the Escrow Agent and appointment of a successor escrow agent in accordance with the provisions set forth herein shall become effective upon acceptance of appointment by the successor escrow agent in accordance with the provisions set forth herein.

Any successor escrow agent appointed under the provisions of this Agreement shall be an entity organized and doing business under the laws of the United States or any state authorized under such laws to exercise corporate trust powers, having its principal office and place of business in any state, having a combined capital and surplus of at least $50,000,000, and subject to supervision or examination by federal or state authority. If such entity published reports of condition at least annually, pursuant to law or to the requirements of any supervising or examining authority above referred to, then the combined capital and surplus of such corporation shall be deemed to be its combined capital and surplus as set forth in its most recent report of condition so published. In case at any time the Escrow Agent shall cease to be eligible in accordance herewith, the Escrow Agent shall resign immediately in the manner and with the effect specified in Section 3.05 hereof.

SECTION 3.08 VESTING OF TRUSTS IN SUCCESSOR ESCROW AGENT. Any successor escrow agent appointed hereunder shall execute, acknowledge and deliver to its predecessor, and also to the City, an instrument in writing accepting such appointment hereunder, and thereupon the resignation or removal of the predecessor escrow agent shall become effective; and such successor escrow agent, without any further act, deed or conveyance, shall become vested with all the rights, powers, trusts, duties and obligations of its predecessor in the trusts hereunder, with like effect as if originally named as escrow agent herein. Upon request of any such successor escrow agent, the City shall execute any and all instruments in writing for more fully and certainly vesting in and conforming to such successor escrow agent all such rights, powers and duties.

Upon acceptance of appointment by a successor escrow agent as heretofore provided, the City shall publish notice of the succession of such escrow agent to the trust hereunder. Such notice shall be published at least once in an Authorized Newspaper. If the City fails to publish such notice within ten (10) days after acceptance of appointment by the successor escrow agent, the successor escrow agent shall cause such notice to be published at the expense of the City.

Any entity into which the Escrow Agent may be merged or with which it may consolidate or any entity resulting from any merger or consolidation to which the Escrow Agent shall be a party, or any entity succeeding to the business of the Escrow Agent, shall be the successor to the Escrow Agent hereunder without the execution or filing of any paper or any further act on the part of any of the parties hereto, anything herein to the contrary notwithstanding, provided that such successor escrow agent shall be eligible under the provisions thereof.

Notwithstanding any of the foregoing provisions of this Article, any bank or trust company having power to perform the duties and execute the trusts of this Agreement and otherwise qualified to act as Escrow Agent hereunder with or into which the bank or trust company acting as Escrow Agent may be merged or consolidated, or to which the assets and business of such bank or trust company may be sold, shall be deemed the successor of the Escrow Agent.

SECTION 3.09 RECEIPT OF PROCEEDINGS. Possession of or receipt of true and correct copies of the Bond Resolution and the proceedings authorizing the issuance of the 2010 Bonds are hereby acknowledged by the Escrow Agent, and reference herein to or citation herein of any provision of such documents shall be deemed to incorporate the same as a part hereof in the same manner and with the same effect as it they were fully set forth herein.

SECTION 3.10 ARRANGEMENTS FOR PAYMENT OF ALL OTHER SUMS PAYABLE UNDER THE BOND RESOLUTION. The Escrow Agent hereby acknowledges that the City has paid, caused to be paid or made arrangements satisfactory to the Escrow Agent for payment of all other sums (in addition to debt service on the 2010 Bonds) payable under the Bond Resolution until the Defeased 2010 Bonds are paid as provided in Section 2.01 hereof. If such arrangements for fees and expenses shall include a prepayment of all or part thereof and if the Escrow Agent resigns or is removed in accordance with Section 3.05 and 3.06 hereof, the Escrow Agent agrees to return to the City that portion of the prepaid fee which is attributable to that part of the trust which is then still to be administered.

ARTICLE IV

MISCELLANEOUS

SECTION 4.01 AMENDMENTS TO THIS AGREEMENT. This Agreement is made for the benefit of the City and the holders from time to time of the Defeased 2010 Bonds and it shall not be repealed, revoked, altered or amended without the written consent of the holders of 100% of the Defeased 2010 Bonds which have not then been paid in accordance with this Agreement. Notwithstanding the foregoing, however, the City may, and the City shall (upon receipt of an opinion of nationally recognized bond counsel satisfactory to the City that the excludability of the interest on the 2010 Bonds from gross income under State of Mississippi law will not be adversely affected), without the consent of, or notice to, such holders, enter into such agreements supplemental to this Agreement as shall not adversely affect the rights of such holders and as shall not be inconsistent with the terms and provisions of this Agreement, for any one or more of the following purposes:

(a) To cure any ambiguity or formal defect or omission in this Agreement;

(b) To grant to, or confer upon, the Escrow Agent for the benefit of the holders of the Defeased 2010 Bonds, any additional rights, remedies, powers or authority that may lawfully be granted to, or conferred upon, such holders or the Escrow Agent; or

(c) To subject to the lien of this Agreement additional funds, securities or properties.

The Escrow Agent shall be entitled to rely exclusively upon an unqualified opinion of nationally recognized attorneys on the subject of municipal bonds with respect to compliance with this Section, including the extent, if any, to which any change, modification, addition or elimination affects the rights of the holders of the Defeased 2010 Bonds, or that any instrument executed hereunder complies with the conditions and provisions of this Section.

All amendments to this Agreement require notice in writing to Moody's Investors Service, Inc.

SECTION 4.02 SEVERABILITY. If any one or more of the covenants or agreements provided in this Agreement on the part of the City or the Escrow Agent to be performed should be determined by a court of competent jurisdiction to be contrary to law, such covenant or agreement shall be deemed and construed to be severable from the remaining covenants and agreements herein contained and shall in no way affect the validity of the remaining provisions of this Agreement.

SECTION 4.03 AGREEMENT BINDING. All the covenants, promises and agreements in this Agreement contained by or on behalf of the City or the Escrow Agent shall bind and inure to the benefit of their respective successors and assigns, whether so expressed or not.

SECTION 4.04 TERMINATION. This Agreement shall terminate when all transfers and payments required to be made by the Escrow Agent under the provisions hereof shall have been made.

SECTION 4.05 GOVERNING LAW. This Agreement shall be governed by the applicable law of the State of Mississippi.

SECTION 4.06 EXECUTION BY COUNTERPARTS. This Agreement may be executed in several counterparts, all or any of which shall be regarded for all purposes as one original and shall constitute and be but one and the same instrument.

[remainder of page left blank intentionally]

IN WITNESS WHEREOF, each of the parties hereto has caused this Agreement to be executed by its duly authorized officers or officials.

[SEAL]

CITY OF HATTIESBURG, MISSISSIPPI

BY:_____
Mayor

ATTEST:

BY:_____

Signature Page to Escrow Agreement dated ___, 2018, by and between the City of Hattiesburg, Mississippi and Hancock Whitney Bank, Jackson, Mississippi, as Escrow Agent.

42557182.v3

HANCOCK WHITNEY BANK
Jackson, Mississippi
as Escrow Agent

BY:_____
Trust Officer

Signature Page to Escrow Agreement dated ___, 2018, by and between the City of Hattiesburg, Mississippi and Hancock Whitney Bank, Jackson, Mississippi, as Escrow Agent.

SCHEDULE A

ESCROW FUND SECURITIES

SCHEDULE B

DEBT SERVICE
REQUIREMENTS FOR THE DEFEASED 2010 BONDS

SCHEDULE C

NOTICE OF DEFEASANCE

NOTICE OF DEFEASANCE

$2,560,000
(original aggregate principal amount)
CITY OF HATTIESBURG, MISSISSIPPI
TAXABLE GENERAL OBLIGATION REFUNDING BONDS, SERIES 2010
Dated July 15, 2010

Maturing July 1, 2019 through and including July 1, 2030, as follows:

Maturity (July 1)	Par Amount Issued and Defeased	Interest Rate	CUSIP
2019	$225,000	4.500 %	
2025	680,000	5.875	
2030	905,000	6.000	

Notice is hereby given to the holders of the obligations captioned above as "Par Amount Issued and Defeased" (hereinafter referred to as the "Defeased 2010 Bonds") that there has been deposited in an irrevocable escrow account held by Hancock Whitney Bank, Jackson, Mississippi, as Escrow Agent, $_____ which will provide moneys which shall be sufficient to pay principal of, premium, if any, and interest on the Defeased 2010 Bonds on and prior to their redemption or maturity dates thereof, as described below. Pursuant to the Bond Resolution of the City of Hattiesburg, Mississippi adopted June 8, 2010, as amended July 6, 2010 (the "Bond Resolution"), each described maturity to be defeased and called for redemption shall paid by Hancock Whitney Bank, as paying agent for the Defeased 2010 Bonds in such manner as determined in, and pursuant to the notice provisions of, the Bond Resolution.

Moneys will be available for the payment of interest on the Defeased 2010 Bonds due on each January 1 and July 1, commencing January 1, 2019, to and including July 1, 2020, and for the principal of the Defeased Bonds on July 1, 2019 and July 1, 2020. All of the Defeased 2010 Bonds maturing on or after July 1, 2020, will be called for redemption on July 1, 2020 at a price of par. The Defeased 2010 Bonds are deemed to have been paid in accordance with the Bond Resolution. Accordingly, the right, title and interest of the holders of the Defeased 2010 Bonds in the Bond Resolution and other moneys as provided in the Bond Resolution, have ceased, determined and become null and void.

The holders of the Defeased 2010 Bonds are entitled for payment (from the paying agent for the Defeased 2010 Bonds) solely out of the moneys or securities so deposited in such escrow account

Dated this _____ day of _____, 2018.

HANCOCK WHITNEY BANK,
as Escrow Agent

BY:_____
Trust Officer

42557182.v3

EXHIBIT D

BUTLER SNOW LETTER

BUTLER | SNOW

August 7, 2018

VIA E-MAIL

City of Hattiesburg, Mississippi
Attn: Mayor and City Council
P.O. Box 1898
Hattiesburg, MS 39403-1898

Defeasance of
City of Hattiesburg, Mississippi
Taxable General Obligation Refunding Bonds, Series 2010
dated July 15, 2010

Ladies and Gentlemen:

We are pleased to confirm our engagement as special counsel to the City of Hattiesburg, Mississippi (the "City") with respect to the defeasance of the above captioned bonds. We appreciate your confidence in us and will do our best to continue to merit it.

As you know, we have performed legal services for transactions of the City in the past. Nevertheless, in establishing our attorney-client relationship for this new transaction, current practice standards dictate that we set forth in writing (and in some detail) the elements of our mutual understanding. While some of the matters covered in this engagement letter will never be relevant or of concern between us, we hope you will understand that as attorneys and counselors it is our natural function to try to make communication clear and complete, and to anticipate and resolve questions before they arise. We also believe that the performance of our services may require your effort and cooperation. Consequently, the better we each understand our respective roles, responsibilities and contributions, the more efficient, effective and economical our work for you can be.

Personnel

This letter sets forth the role we propose to serve and the responsibilities we propose to assume as special counsel to the City in connection with the defeasance. We understand that the Mayor and City Council of the City have authorized the execution of this letter. Elizabeth Clark and Thad Varner will be principally responsible for the work performed on

your behalf. Where appropriate, certain tasks may be performed by other attorneys or paralegals.

Scope of Employment

We have been engaged by you as a recognized expert with respect to the defeasance of bonds. As special counsel in this regard, we will: examine applicable law; consult with the parties to the transaction; review a certified transcript of proceedings and documentation regarding the defeased bonds; and undertake such additional duties as we deem necessary to render our defeasance opinion. Subject to the completion of proceedings to our satisfaction, we will render our opinion relating to the defeasance.

Our services are limited to those contracted for explicitly herein; the City's execution of this letter constitutes an acknowledgment of those limitations. Specifically, but without implied limitation, our responsibilities do not include any representation by Butler Snow LLP in connection with the sale of any ownership interests in the City, any opinion of this firm other than the defeasance opinion, any IRS audit, SEC enforcement action or any litigation involving the City, or any other matter. Neither do we assume responsibility for the preparation of any documents which are to be filed with any state, federal or other regulatory agency. Nor do our services include financial advice.

Representation of the City

In performing our services as special counsel, the City will be our client and an attorney-client relationship will exist between us. We will represent the interests of the City rather than its governing body, its individual members, or the City's employees.

Fee Arrangement

Based upon our current understanding of the transaction, our fee as special counsel will not exceed $15,000.

Document Retention

Butler Snow maintains its client files electronically. We do not keep separate paper files. We will scan documents you or others send to us related to your matter to our electronic file for that matter and will retain only the electronic version while your matter is pending. Unless you instruct us otherwise, once such documents have been scanned to our electronic file, we will destroy all paper documents provided to us. If you send us original documents that need to be maintained as originals while the matter is pending, we ordinarily will scan those to our client file and return the originals to you for safekeeping. Alternatively, you may request that we maintain such originals while the matter is pending.

If we agree to do that, we will make appropriate arrangements to maintain those original documents.

Unless you instruct us otherwise, once our work on this matter is completed, we will designate your file as a closed file on our system and will apply our document retention policy then in effect to the materials in your closed file. At that time, we ordinarily will return to you any original documents we have maintained in accordance with the preceding paragraph while the matter was pending. Otherwise, we will retain the closed file materials for our benefit and subject to our own policies and procedures concerning file retention and destruction. Accordingly, if you desire copies of any documents (including correspondence, e-mails, pleadings, contracts, agreements, etc.) related to this matter or generated while it was pending, you should request such copies at the time our work on this matter is completed.

Termination of Engagement

The above fees contemplate compensation for expedited services as special counsel to the City in connection with the defeasance. Upon delivery of the opinion, our responsibilities as special counsel will terminate with respect to this defeasance, and our representation of the City and the attorney-client relationship created by this engagement letter will be concluded. Specifically, but without implied limitation, we do not undertake to provide continuing advice to the City or to any other party to the transaction. Should the City seek the advice of counsel on a post-closing matter or seek other, additional legal services, we would be happy to discuss the nature and extent of our separate engagement at that time.

Approval

If the estimated fees and other foregoing terms of this engagement are acceptable to you, please so indicate by returning a copy of this letter signed by the officer so authorized, keeping a copy for your files.

We are pleased to have the opportunity to serve as your special counsel and look forward to a mutually satisfactory and beneficial relationship. We are deeply committed to the proposition that our clients must be satisfied with the quality of our services as well as the amount of our charges. Our effectiveness and your best interest are enhanced by an atmosphere of candor and confidence between us, not only as to the facts and circumstances of the legal issues on which we are working, but also as to the attorney-client relationship itself. If at any time you have questions concerning our work or our fees, we hope that you will contact us immediately.

BUTLER SNOW LLP

By: Elizabeth Lambert Clark
Elizabeth Lambert Clark

Accepted and Approved:

THE CITY OF HATTIESBURG, MISSISSIPPI

BY: _____
Mayor

Dated: August 7, 2018

43295497.v1

EXHIBIT E

GOVERNMENT CONSULTANTS LETTER

GOVERNMENT CONSULTANTS

GOVERNMENT CONSULTANTS, INC.

Consulting & Municipal Advisory Firm

116 Village Boulevard
Madison, Mississippi 39110

Telephone: (601) 982-0005
Facsimile: (601) 982-2448
Email: gcms@gc-ms.net

August 7, 2018

Mayor Barker and City Council
City of Hattiesburg, Mississippi
200 Forrest Street
Hattiesburg, Mississippi 39401

Re: City of Hattiesburg, Mississippi
DEFEASANCE of City of Hattiesburg, Mississippi Taxable General Obligation Bonds, Series 2010 (the "Bonds")
Disclosure and Engagement Letter (the "Letter")

Dear Mayor and City Council,

We are writing you to provide certain disclosures to you as representative of the City of Hattiesburg, Mississippi (the "Issuer") as required by the Securities and Exchange Commission ("SEC") and Municipal Securities Rulemaking Board ("MSRB" or the "Board"). Government Consultants, Inc. ("GCI" or the "Municipal Advisor") is an Independent Registered Municipal Advisor and welcomes the opportunity to provide municipal advisory services to the Issuer for the defeasance of the above reference Bonds.

Disclosures Concerning our Role as Municipal Advisor

(i) The Municipal Advisor has a fiduciary duty to the Issuer. This is different than an underwriter, if any, who only has an obligation to deal fairly with you, as Issuer. The underwriter, if any, has financial and other interests that differ from the Issuer, unlike the Municipal Advisor who has no financial or other interests that differ from the Issuer.

(ii) We shall provide advice concerning the structure, timing, terms, sizing and other similar matters related to the defeasance by the Issuer.

(iii) We shall make a reasonable inquiry to the relevant facts that help determine what course of action to take that best suits the Issuer. A reasonable analysis will be conducted to determine that all advice and/or recommendation(s), are not based on materially inaccurate or incomplete information.

(iv) We shall evaluate possible material risks, benefits and alternatives with the Issuer.

(v) Our duties are limited to this transaction and the above-mentioned disclosures.

The MSRB provides a brochure covering information for municipal advisory client protections and appropriate regulatory authority contact information on the MSRB homepage at http://www.msrb.org.

Disclosure Concerning Conflicts of Interest and Other Information

MSRB Rule G-42 requires that GCI provide in writing any disclosures relating to actual or potential material conflicts of interest, including certain categories of potential conflicts of interest identified in MSRB Rule G-42, if applicable. After reasonable due diligence by GCI, there are no known material conflicts of interest that may affect GCI's ability to serve as a municipal advisor to the Issuer. If new material conflict(s) of interest occurs after the delivery and execution of this Letter, GCI will disclose all new material conflict(s) of interest to the Issuer.

In addition to providing disclosures concerning material conflict(s) of interest, MSRB Rule G-42 further requires GCI to have a fiduciary duty that includes a duty of loyalty and duty of care to the Issuer and to disclose our role and duties as a Municipal Advisor. Our primary obligation is to always act in the best interest of the Issuer.

Disclosure Concerning the Compensation

Our compensation for serving as municipal advisor will be contingent on the closing of the transaction(s) for the issuance of bonds and is based, in part, on the size of the bonds. We will negotiate with the Issuer as to compensation and will be paid upon closing of the transaction(s). The Municipal Advisor will abide by its fiduciary duty to the Issuer and provide unbiased and independent advice as required by MSRB.

Disclosure of Information Regarding Legal Events and Disciplinary History

MSRB Rule G-42 requires that all municipal advisors, including GCI, provide in writing to their clients certain legal or disciplinary events that are material to the Issuer's evaluation of GCI or the integrity of GCI management or personal. GCI believes there are no known legal or disciplinary events reported on any Form MA or Form MA-I that are material to your evaluation of GCI and there are no recent changes made on any Form MA or Form MA-I that are material to your evaluation. Any such information, whether material or not must be reported on Form MA and/or MA-l filed with the SEC, which forms are available and which can be viewed on the SEC's EDGAR system website at http://www.sec.gov/edgar/searchedgar/companysearch.html.

Disclosure Concerning the Term of Engagement

The Term of Engagement is effective on the execution date of the document that employed GCI as the Issuer's appointed municipal advisor and ends upon the closing and delivery of the Bonds. The Engagement may be terminated with or without cause by the Issuer or the Municipal Advisor. A written notice must be delivered to the other party, specifying the effective date of the termination.

Acknowledgement

We must seek your acknowledgement that you have received this Letter. Accordingly, please acknowledge receipt of this Letter on behalf of the Issuer in the space provided below. If you are not authorized to execute this Letter on behalf of the Issuer, please notify GCI immediately so the correct individual may be contacted. Please let us know if you have any questions or concerns.

Sincerely,

Government Consultants, Inc.

BY: _____
Lynn Norris

RECEIPT ACKNOWLEDGEMENT

BY: _____ 8-24-18
Signature **Date**

Toby Barker, Mayor, City of Hattiesburg, Mississippi
Authorized Representative's Name

EXHIBIT F

DUNCAN-WILLIAMS LETTER

Do Well.
Duncan-Williams, Inc.
EST. 1969

IRMA REPRESENTATION LETTER

To: Duncan-Williams, Inc.

Re: Independent Registered Municipal Advisor (IRMA) Representation

We are writing to provide you with certain representations pursuant to Rule 15Ba1-1 (the *"Municipal Advisor Rule"*) of the Securities and Exchange Commission (the *"SEC"*) under the Securities Exchange Act of 1934, as amended (the *"Act"*), regarding our independent registered municipal advisor.

Pursuant to paragraph (d)(3)(vi)(B) of the Municipal Advisor Rule, we hereby represent to you that we are represented by, and will rely on the advice of, Government Consultants, Inc, (the *"Advisor"*) on all matters relating to the issuances of municipal securities and municipal financial products including the investment of bond proceeds and escrow investments.

We have been advised by the Advisor that: (i) it has registered as a municipal advisor with the SEC and the Municipal Securities Rulemaking Board; and (ii) Lynn Norris, who has been employed by the Advisor for at least two years prior to the date of this letter, are the Associated Individuals of the Advisor for its representation of us.

We understand that Duncan-Williams, Inc. is not acting as a municipal advisor and is therefore not subject to the fiduciary duty set forth in Section 15B(c)(1) of the Act.

Capitalized terms used and not defined in this letter have the meanings assigned to them in the Act, the Municipal Advisor Rule and the related guidance of the SEC's Office of Municipal Securities. You may rely on this representation letter until such time as you receive notice from us.

Sincerely,

Toby Barker
Mayor, City of Hattiesburg, Mississippi
August 7, 2018

For further information about the Municipal Advisor Rule, please refer to the SEC's May 2014 FAQs.

City of Hattiesburg, MS

200 Forrest St.
P.O. Box 1898
Hattiesburg, MS 39401

Master

File Number: 2018-657

File ID:	2018-657	**Type:**	Resolution	**Status:**	Passed
Version:	1	**Reference:**		**In Control:**	City Council
Requester:				**File Created:**	07/30/2018
Brief Title:	Resolution declaring certain vehicles as surplus and authorizing sale of said vehicles at auction.			**Final Action:**	08/07/2018
				Minute Book Number:	MB 2018-191

Title:

Adopt a Resolution declaring surplus certain vehicles(per attached list) and authorize sale of said vehicles at auction,and removal of said vehicles from the City's inventory of the Public Works
Solid Waste Division .

Notes:			
		Agenda Date:	08/07/2018
Indexes:		**Agenda Number:**	VI.-4
Sponsors:		**Enactment Date:**	
Attachments:	Surplus Res- PW- Solid Waste Div., Memo-PW-Solid Waste Division, Executed - Res #2018-102 Surplus Resolution for PW- Solid Waste Div.	**Enactment Number:**	
Contact:		**Meeting Date:**	
Drafter:		**Effective Date:**	

History of Legislative File

Version:	Acting Body:	Date:	Action:	Sent To:	Due Date:	Return Date:	Result:
1	City Council	08/07/2018	Adopt				Pass

Action Text: A MOTION was made by Council Member George and seconded by Council Member Brown to Adopt a Resolution (#2018-102) declaring surplus certain vehicles (per attached list) and authorize sale of said vehicles at auction, and removal of said vehicles from the City's inventory of the Public Works Solid Waste Division.

There being no discussion, the Motion received the affirmative vote of the Council as follows:

Yeas: 5 - George, Delgado, Carroll, Dryden and Brown

Nays: 0

Yea: 5 Council Member George
Council Member Delgado
Council President Carroll
Council Vice President Dryden
Council Member Brown

Text of Legislative File 2018-657

Title

Adopt a Resolution declaring surplus certain vehicles(per attached list) and authorize sale of said vehicles at auction,and removal of said vehicles from the City's inventory of the Public Works
Solid Waste Division .

Summary

Resolution declaring certain vehicles as surplus and authorizing sale of said vehicles at auction, and removing from the City's inventory.

Budget Information

Expenditure Type

Purchasing Item

Publication Information

RESOLUTION

WHEREAS, the City of Hattiesburg finds and determines said vehicles(per attached memo) is no longer needed for municipal or related purposes and is not to be used in the future operation of the City; and

WHEREAS, the Governing Authorities of the City of Hattiesburg are authorized and empowered in their discretion to dispose of said vehicles in accordance with appropriate Mississippi Code Statutes; and

WHEREAS, the Governing Authorities of the City of Hattiesburg desire to sell said vehicles at auction.

NOW, THEREFORE, BE IT RESOLOVED that the Hattiesburg City Council does hereby declare surplus the following vehicles, as per attached memo, and authorize vehicles to be sold at auction.

The foregoing resolution having been reduced to writing, same was introduced by Council member _____, second by Council member _____, and was adopted by the following vote, to wit:

YEAS : NAYS:

The President thereby declared the motion carried and the Resolution adopted, on this the 7th[t] day of August, A.D., 2018.

(S E A L)

ATTEST: ADOPTED:

_____ _____

CLERK OF COUNCIL PRESIDENT COUNCIL

The above and foregoing Resolution having been submitted to and approved by the Mayor, on this 7th day of August, A.D., 2018.

ATTEST: APPROVED:

_____ _____

CITY CLERK MAYOR

MAYOR
Toby Barker

COUNCIL - WARD ONE *Jeffrey George*
COUNCIL - WARD TWO *Deborah Denard Delgado*
COUNCIL - WARD THREE *Carter Carroll*
COUNCIL - WARD FOUR *Mary Dryden*
COUNCIL - WARD FIVE *Nicholas Brown*

To: Mayor and City Council

From: Kermas Eaton, City Clerk /Director of Administration

Date: July 30,2018

RE: Surplus Vehicles

I am requesting the vehicles listed below be declared surplus and removed from the City's inventory and sold at auction.

Unit # 17723 **Model Year: 2010** **Make/Model: International 7400**
Type: Truck - Rear Loader **VIN: 1HTWCAZR8AJ281729**

Unit # 16080 **Model Year: 2008** **Make/Model: International 7400**
Type: Truck – Rear Loader **VIN: 1HTWCAAR18J641459**

Unit # 14410 **Model Year: 2005** **Make/Model: International 7000**
Type: Truck – Rear Loader **VIN: 1HTWCAAR25J002602**

Unit # 11434 **Model Year: 1999** **Make Model: International 4700**
Type: Knuckle boom Loader **VIN: 1HTSCABN1YH276685**

Unit # 8877 **Model Year: 1996** **Make Model: Ford F-800**
Type: Open Body **VIN: 1FDYF80E5YVA13020**

Thanks,
Kermas Eaton

There came on for consideration at a duly constituted meeting of the Mayor and Members of the City Council of the City of Hattiesburg, Mississippi, held on the 7th day of **August, 2018**, the following Resolution:

RESOLTUION 2018-102

WHEREAS, the City of Hattiesburg finds and determines said vehicles (per attached memo) is no longer needed for municipal or related purposes and is not to be used in the future operation of the City; and

WHEREAS, the Governing Authorities of the City of Hattiesburg are authorized and empowered in their discretion to dispose of said vehicles in accordance with appropriate Mississippi Code Statutes; and

WHEREAS, the Governing Authorities of the City of Hattiesburg desire to sell said vehicles at auction.

NOW, THEREFORE, BE IT RESOLOVED that the Hattiesburg City Council does hereby declare surplus the following vehicles, as per attached memo, and authorize vehicles to be sold at auction.

The foregoing Resolution having been reduced to writing, same was introduced by Council Member George, seconded by Council Member Brown, and was adopted by the following vote, to wit:

YEAS:	**NAYS:**	**ABSENT:**
George	**None**	**None**
Delgado		
Carroll		
Dryden		
Brown		

The President thereby declared the motion carried and the Resolution adopted, on this the 7th day of **August, 2018**.

(SEAL)

ATTEST:

CLERK OF COUNCIL

ADOPTED:

PRESIDENT OF COUNCIL

The above and foregoing Resolution having been submitted to and approved by the Mayor, on this 7th day of **August, 2018**.

ATTEST:

CITY CLERK

APPROVED:

MAYOR

City of Hattiesburg, MS

200 Forrest St.
P.O. Box 1898
Hattiesburg, MS 39401

Master

File Number: 2018-658

File ID:	2018-658	**Type:**	Resolution	**Status:**	Passed
Version:	1	**Reference:**		**In Control:**	City Council
Requester:	Lamar Rutland			**File Created:**	07/30/2018
Brief Title:	Adopt a Resolution authorizing Requisition No. 24 from the Project Fund Construction Account - 2016 Water/Sewer Bonds.			**Final Action:**	08/07/2018
				Minute Book Number:	MB 2018-191-192

Title:

Adopt a Resolution authorizing Requisition No. 24 from the Project Fund Construction Account in connection with a certain loan agreement dated August 18, 2016, by and between the Mississippi Development Bank and the City of Hattiesburg.

Notes: Please expedite signatures and email copy of executed resolution to engineering.

		Agenda Date:	08/07/2018
Indexes:		**Agenda Number:**	VI.-5
Sponsors:		**Enactment Date:**	
Attachments:	2016 Bond Resolution No. 24, Executed - Res#2018-103 2016 Bond Resolution No. 24	**Enactment Number:**	
Contact:		**Meeting Date:**	08/07/2018
Drafter:	Sharon Waits	**Effective Date:**	

History of Legislative File

Version:	Acting Body:	Date:	Action:	Sent To:	Due Date:	Return Date:	Result:
1	City Council	08/07/2018	Adopt				Pass

Action Text: A MOTION was made by Council Member George and seconded by Council Vice President Dryden to Adopt a Resolution (#2018-103) authorizing Requisition No. 24 from the Project Fund Construction Account in connection with a certain loan agreement dated August 18, 2016, by and between the Mississippi Development Bank and the City of Hattiesburg.

There being no discussion, the Motion received the affirmative vote of the Council as follows:

Yeas: 5 - George, Delgado, Carroll, Dryden and Brown

Nays: 0

Yea: 5 Council Member George
Council Member Delgado
Council President Carroll
Council Vice President Dryden
Council Member Brown

Text of Legislative File 2018-658

Title

Adopt a Resolution authorizing Requisition No. 24 from the Project Fund Construction Account in connection with a certain loan agreement dated August 18, 2016, by and between the Mississippi Development Bank and the City of Hattiesburg.

Summary

Adopt a Resolution authorizing Requisition No. 24 from the Project Fund Construction Account - 2016 Water/Sewer Bonds.

The City Council of the City of Hattiesburg, Mississippi (the "City") acting for and on behalf of the City, took up for consideration the matter of requesting and authorizing Requisition No. **24** from the Project Fund Construction Account in connection with the loan agreement between the Mississippi Development Bank and the City dated August 18, 2016. After discussion of the subject, Council Member _____ offered and moved for the adoption of the following resolution:

RESOLUTION OF THE CITY COUNCIL OF THE CITY OF HATTIESBURG, MISSISSIPPI (THE "CITY") AUTHORIZING REQUISITION NO. 24 FROM THE PROJECT FUND CONSTRUCTION ACCOUNT IN CONNECTION WITH THAT CERTAIN LOAN AGREEMENT, DATED AS OF AUGUST 18, 2016, BY AND BETWEEN THE MISSISSIPPI DEVELOPMENT BANK AND THE CITY.

Whereas, on August 18, 2016 the City entered into a loan with the Mississippi Development Bank in an amount not to exceed $25,000,000 (the "Loan") pursuant to the terms and conditions of that certain loan agreement, dated as of August 18, 2016, by and between the Mississippi Development Bank and the City (the "Loan Agreement").

Whereas, the City Council of the City now finds it necessary to approve Requisition No. **24** from the Project Fund Construction Account under the Loan in the total aggregate amount of **$382,482.30** for the purpose of paying Water & Sewer Projects in connection with the loan as more particularly described in Exhibit A.

NOW, THEREFORE, BE IT RESOLVED BY THE CITY COUNCIL OF THE CITY OF HATTIESBURG, MISSISSIPPI:

SECTION 1. The City Council of the City hereby authorizes and approves Requisition No. **24** from the Project Fund Construction Account under the Loan in the total aggregate amount of **Three hundred Eighty-Two Thousand Four Hundred Eighty-two and 30/100 dollars ($382,482.30)** for the purpose of paying Water & Sewer Projects in connection with the loan as more particularly described in Exhibit A.

SECTION 2. The City Council hereby directs Regions Bank, as Trustee to disburse funds of Requisition No.**24** in the total aggregate amount of **Three hundred Eighty-Two Thousand Four Hundred Eighty-two and 30/100 dollars ($382,482.30)** as authorized herein, as more particularly described in Exhibit A.

SECTION 3. The Mayor and City Clerk are hereby authorized and directed for and on behalf of the City to take any and all action as may be required by the City to carry out and give effect to the aforesaid documents authorized pursuant to this Resolution and to execute all papers, documents, certificates and other instruments that may be required for the carrying out of the authority conferred by this Resolution in order to evidence the authority.

The above and foregoing Resolution, after having been first reduced to writing, was introduced by Council Member _____ seconded by Council Member _____, and was adopted by the following vote, to wit:

YEAS: NAYS: ABSENT:

The motion having received the affirmative vote of a majority of the Council members present, the President declared the motion carried and the resolution adopted, on this the **7th day** of **August**, 2018.

(SEAL)

ATTEST:	**ADOPTED:**
_____	_____
CLERK OF COUNCIL	**PRESIDENT**

The above and foregoing Resolution having been submitted to and approved by the Mayor, this the **7th day** of **August**, 2018.

ATTEST:	**APPROVED:**
_____	_____
CITY CLERK	**MAYOR**

EXHIBIT A

PROJECT FUND CONSTRUCTION ACCOUNT REQUISITION

sdw Engineering Progress

CITY OF HATTIESBURG
P. O. BOX 1898
HATTIESBURG, MS 39403-1898

July 25, 2018
Project No: 11256
Invoice No: 20357

Project Manager Kyle Wallace

Project 11256 CIPP Sewer in Various Locations

Professional Services from June 24, 2018 to July 21, 2018

Phase DD Design Phase Services

Professional Personnel

	Hours	Rate	Amount	
PROJECT ENGINEER				
Wallace, Kyle	1.00	175.00	175.00	
Weeks, John	16.00	175.00	2,800.00	
Totals	17.00		2,975.00	
Total Labor				**2,975.00**
		Total this Phase		**$2,975.00**
		Total this Invoice		**$2,975.00**

Please make checks payable to Shows, Dearman and Waits, Inc. Thank you.

093695.7220.75
MB 2011-4/89-110

301 Second Ave. | Hattiesburg, MS 39401 | (p) 601.544.1821 | sd-w.com

sdw Engineering Progress

CITY OF HATTIESBURG
P. O. BOX 1898
HATTIESBURG, MS 39403-1898

July 25, 2018
Project No: 1273-S005
Invoice No: 20359

Project Manager Kyle Wallace

Project 1273-S005 ComSWIP Sewer Phase V

Professional Services from June 24, 2018 to July 21, 2018

Phase CM Phase V - Construction Phase Services

Professional Personnel

	Hours	Rate	Amount	
CONSTRUCTION OBSERVER				
Jackson, Terry	41.00	85.00	3,485.00	
Tingle, William	20.50	95.00	1,947.50	
CONSTRUCTION OBSERVER				
Riley, Ivy	6.50	105.00	682.50	
PROJECT ENGINEER				
Sellers, Bennie	12.00	150.00	1,800.00	
Wallace, Kyle	.50	175.00	87.50	
Totals	80.50		8,002.50	
Total Labor				**8,002.50**
		Total this Phase		**$8,002.50**
		Total this Invoice		**$8,002.50**

Please make checks payable to Shows, Dearman and Waits, Inc. Thank you.

093695. 7220.54
MB 2012-1/4/13

301 Second Ave. | Hattiesburg, MS 39401 | (p) 601.544.1821 | sd-w.com

sdw Engineering Progress

CITY OF HATTIESBURG
P. O. BOX 1898
HATTIESBURG, MS 39403-1898

July 25, 2018
Project No: 1273-S011
Invoice No: 20348

Project Manager John Weeks

Project 1273-S011 ComSWIP Sewer Phase X - Quinn St. Area

Professional Services from June 24, 2018 to July 21, 2018

Phase CM Construction Management

Construction Cost	2,992,750.30
Fee Percentage	9.00
Total Fee	269,347.53

Billing Phase	Percent of Fee	Fee	Percent Complete	Earned	Previous Fee Billing	Current Fee Billing
Design Phase Services	100.00	269,347.53	100.00	269,347.53	269,347.53	0.00
		Totals		269,347.53	269,347.53	0.00
		Total Fee				**0.00**

Professional Personnel

	Hours	Rate	Amount	
CADD TECHNICIAN I				
Sullivan, Richard	1.50	105.00	157.50	
SR. RESIDENT PROJECT REPRESENTATIVE				
Phillips, Michael	78.50	85.00	6,672.50	
PROJECT ENGINEER				
Weeks, John	10.50	175.00	1,837.50	
Totals	90.50		8,667.50	
Total Labor				**8,667.50**

Consultants

Speedy Printing & Signs		70.62	
Total Consultants	**1.0 times**	**70.62**	**70.62**

Total this Phase **$8,738.12**

Total this Invoice **$8,738.12**

Please make checks payable to Shows, Dearman and Waits, Inc. Thank you.

093695.7220.72
MB 2011-4/89-110

sdw Engineering Progress

CITY OF HATTIESBURG
P. O. BOX 1898
HATTIESBURG, MS 39403-1898

July 25, 2018
Project No: 1273-W007
Invoice No: 20361

Project Manager Kyle Wallace

Project 1273-W007 ComSWIP Water Phase II - Palmers Crossing

Professional Services from June 24, 2018 to July 21, 2018

Phase CM Palmer's Crossing - Construction Phase

Professional Personnel

	Hours	Rate	Amount	
AUTO CAD TECHNICIAN				
Sullivan, Richard	2.50	85.00	212.50	
CONSTRUCTION OBSERVER				
Jackson, Terry	53.00	85.00	4,505.00	
Tingle, William	40.00	85.00	3,400.00	
CONSTRUCTION OBSERVER				
Riley, Ivy	5.00	100.00	500.00	
PROJECT ENGINEER				
McNease, Shea	19.00	150.00	2,850.00	
Sellers, Bennie	13.50	150.00	2,025.00	
Totals	133.00		13,492.50	
Total Labor				**13,492.50**
		Total this Phase		**$13,492.50**
		Total this Invoice		**$13,492.50**

Please make checks payable to Shows, Dearman and Waits, Inc. Thank you.

093695. 7245.51
MB 2011-4/89-110

sdw Engineering Progress

CITY OF HATTIESBURG
P. O. BOX 1898
HATTIESBURG, MS 39403-1898

July 25, 2018
Project No: 1273-S010
Invoice No: 20347

Project Manager John Weeks

Project 1273-S010 ComSWIP Sewer Phase VIII - Camp St. Area

Professional Services from June 24, 2018 to July 21, 2018

Phase CM Construction Phase Services

Professional Personnel

	Hours	Rate	Amount	
CADD TECHNICIAN I				
Sullivan, Richard	8.50	105.00	892.50	
SR. RESIDENT PROJECT REPRESENTATIVE				
Tingle, William	13.50	95.00	1,282.50	
PROJECT ENGINEER				
Weeks, John	18.50	150.00	2,775.00	
Totals	40.50		4,950.00	
Total Labor				**4,950.00**
		Total this Phase		**$4,950.00**
		Total this Invoice		**$4,950.00**

Please make checks payable to Shows, Dearman and Waits, Inc. Thank you.

093695.7220.70
MTB 2011-4/89-110

301 Second Ave. | Hattiesburg, MS 39401 | (p) 601.544.1821 | sd-w.com

sdw Engineering Progress

CITY OF HATTIESBURG
P. O. BOX 1898
HATTIESBURG, MS 39403-1898

July 25, 2018
Project No: 1273-W015
Invoice No: 20349

Project Manager John Weeks

Project 1273-W015 Water Plant #1 Rehabilitation

Professional Services from June 24, 2018 to July 21, 2018

Phase DD Design Phase Services

Professional Personnel

	Hours	Rate	Amount	
CADD TECHNICIAN I				
Sullivan, Richard	1.00	105.00	105.00	
CAD TECHNICIAN II				
Trahan, Beau	80.50	90.00	7,245.00	
FIELD CREW				
Crew, Field	4.00	175.00	700.00	
PROJECT ENGINEER				
Connolly, Nicholas	5.00	175.00	875.00	
Weeks, John	17.00	175.00	2,975.00	
Totals	107.50		11,900.00	
Total Labor				**11,900.00**
		Total this Phase		**$11,900.00**
		Total this Invoice		**$11,900.00**

Please make checks payable to Shows, Dearman and Waits, Inc. Thank you.

093695.7295.70

MB 2017-81

301 Second Ave. | Hattiesburg, MS 39401 | (p) 601.544.1821 | sd-w.com

sdw Engineering Progress

CITY OF HATTIESBURG
P. O. BOX 1898
HATTIESBURG, MS 39403-1898

July 25, 2018
Project No: 1273-S012
Invoice No: 20360

Project Manager Kyle Wallace

Project 1273-S012 COMSWIP Sewer Improv. Phase XII

Professional Services from June 24, 2018 to July 21, 2018

Professional Personnel

	Hours	Rate	Amount	
PROJECT ENGINEER				
Connolly, Nicholas	3.00	175.00	525.00	
Totals	3.00		525.00	
Total Labor				**525.00**
		Total this Invoice		**$525.00**

Please make checks payable to Shows, Dearman and Waits, Inc. Thank you.

093695. 7220.74
MB 2011-4/89-110

sdw Engineering Progress

CITY OF HATTIESBURG
P. O. BOX 1898
HATTIESBURG, MS 39403-1898

July 25, 2018
Project No: 1273-W013.001
Invoice No: 20362

Project Manager Kyle Wallace

Project 1273-W013.001 COMSWIP Water Phase V - I59 Crossing - Construction Phase

Professional Services from June 24, 2018 to July 21, 2018

Phase CM Construction Management

Professional Personnel

	Hours	Rate	Amount	
RESIDENT PROJECT REPRESENTATIVE				
Riley, Ivy	1.50	105.00	157.50	
PROJECT ENGINEER				
Wallace, Kyle	1.50	175.00	262.50	
Totals	3.00		420.00	
Total Labor				**420.00**
		Total this Phase		**$420.00**
		Total this Invoice		**$420.00**

Please make checks payable to Shows, Dearman and Waits, Inc. Thank you.

093695. 7245.62
MB 2011-4/89-110

301 Second Ave. | Hattiesburg, MS 39401 | (p) 601.544.1821 | sd-w.com

sdw Engineering Progress

CITY OF HATTIESBURG
P. O. BOX 1898
HATTIESBURG, MS 39403-1898

July 26, 2018
Project No: 1273-S014
Invoice No: 20371

Project Manager Shea McNease

Project 1273-S014 ComSWIP Sewer Phase IX Bushman & 2nd

Professional Services from June 24, 2018 to July 21, 2018

Phase DD Design Phase Services

Professional Personnel

	Hours	Rate	Amount	
PROJECT ENGINEER				
McNease, Shea	13.00	175.00	2,275.00	
Totals	13.00		2,275.00	
Total Labor				**2,275.00**
		Total this Phase		**$2,275.00**
		Total this Invoice		**$2,275.00**

Please make checks payable to Shows, Dearman and Waits, Inc. Thank you.

093695.7220.71

MB 2011-4/89-90

301 Second Ave. | Hattiesburg, MS 39401 | (p) 601.544.1821 | sd-w.com

sdw
Engineering Progress

July 25, 2018

City of Hattiesburg
Post Office Box 1898
Hattiesburg MS 39403-1898

Attn: Lamar Rutland, P.E.

**RE: Comprehensive Sewer Improvements Ph V -
City of Hattiesburg**

Dear Mr. Rutland:

Enclosed please find Pay Estimate No. 6 for the above referenced project in the amount of $160,435.16.

Should you have any questions and/or comments, please, do not hesitate to contact me.

Sincerely,

Kyle D. Wallace, P.E.
Project Engineer

/aa

cc: Terry Jackson, SDW

RECEIVED 7/30/18

301 Second Ave. | Hattiesburg, MS 39401 | (p) 601.544.1821 | (f) 601.544.0501 | sd-w.com

Contractor's Application For Payment No. 6

	Application Period: Beginning: 5/26/2018 Ending: 6/25/2018	Application Date: 5-Jul-18
To (Owner): CITY OF HATTIESBURG	From (Contractor): C.B. DEVELOPERS, INC.	Via (Engineer): SHOWS, DEARMAN & WAITS, INC.
Project: COMPRENHENSIVE SEWER PHASE 5	Contract:	
Owner's Contract No.:	Contractor's Project No.:	Engineer's Project No.:

Change Order Summary

Approved Change Orders		
Number	Additions	Deductions
TOTALS	$ -	$ -
NET CHANGE BY CHANGE ORDERS	$ -	

1. ORIGINAL CONTRACT PRICE	$	1,077,240.50
2. Net change by Change Orders	$	-
3. CURRENT CONTRACT PRICE (LINE 1 + 2)	$	1,077,240.50
4. TOTAL COMPLETED AND STORED TO DATE (Column F on Progress Estimates)	$	744,277.36
5. RETAINAGE:		
a. 5.0 % x Work Completed	$	37,213.87
b. 5.0% x Stored Material	$	-
c. Total Retainage (line 5a + line 5b)	$	37,213.87
6. AMOUNT ELIGIBLE TO DATE (Line 4 - Line 5c)	$	707,063.49
7. LESS PREVIOUS PAYMENTS (Line 6 from prior Application)	$	546,628.33
8. AMOUNT DUE THIS APPLICATION	$	***160,435.16***
9. BALANCE TO FINISH, PLUS RETAINAGE (Column G on Progress Estimate + Line 5 above)	$	370,177.01

CONTRACTOR'S CERTIFICATION

The undersigned Contractor certifies that: (1) all previous progress payments received from Owner on account of Work done under the Contract have been applied on account to discharge Contractor's legitimate obligations incurred in connection with Work covered by prior Applications for Payment; (2) title of all Work, materials and equipment incorporated in said Work or otherwise listed in or covered by this Application for Payment will pass to Owner at time of payment free and clear of all Liens, security interests and encumbrances (except such as are covered by a Bond acceptable to Owner indemnifying Owner against any such Liens, security interest or encumbrances); and (3) all Work covered by this Application for Payment is in accordance with the Contract Documents and is not defective.

By: Date: 7/24/2018

Payment of: **$160,435.16**
(Line 8 or other - attach explanation of other amount)

Is recommended by: (Engineer) 7-27-18 (Date)

Payment of: **$160,435.16**
(Line 8 or other - attach explanation of other amount)

Is approved by: (Owner) (Date)

Is approved by: (Owner) (Date)

Approved by: (Funding Agency, if applicable) (Date)

EJCDC No. C-620 (2002 Edition)

Prepared by the Engineers' Joint Contract Documents Committee and endorsed by the Associated General Contractors of America and the Construction Specifications Institute.

Progress Estimate

6 ·actor's Application

For (contract):	COMPRENHENSIVE SEWER PHASE 5	5/26/2018	6/25/2018	Application Number:	43286
Application Period:	5/26/2018 TO 6/25/2018			Application Date:	5-Jul-18

	A			B	C	D	E	F		G
Pay Item	Item Description	Bid Quantity	Unit Price	Bid Value	Estimated Quantity Installed	Value	Materials Stored (not in C)	Total Completed and Stored to Date (D + E)	% (F)	Balance to Finish (B - F)
	SITE 1-DOGWOOD DRIVE									
1	**4" 160 PSI PVC SANITARY SEWER FORCE MAIN (ALL DEPTHS)**	**1000.0**	$ 7.84	$ 7,840.00	745	$ 5,840.80	$0.00	$ 5,840.80	75%	$ 1,999.20
2	**8" SDR 26 PVC SEWER PIPE (0-6')**	**1098.0**	$ 24.16	$ 26,527.68	966	$ 23,338.56	$0.00	$ 23,338.56	88%	$ 3,189.12
3	**8" SDR 26 PVC SEWER PIPE (6'-8')**	**601.0**	$ 26.56	$ 15,962.56	335	$ 8,897.60	$0.00	$ 8,897.60	56%	$ 7,064.96
4	**8" SDR 26 PVC SEWER PIPE (8'-10')**	**123.0**	$ 38.55	$ 4,741.65	146	$ 5,628.30	$0.00	$ 5,628.30	119%	$ (886.65)
5	**8" SDR 26 PVC SEWER PIPE (10'-12')**	**101.0**	$ 43.34	$ 4,377.34	48	$ 2,080.32	$0.00	$ 2,080.32	48%	$ 2,297.02
6	**8" SDR 26 PVC SEWER PIPE (12'-14')**	**135.0**	$ 48.14	$ 6,498.90	55	$ 2,647.70	$0.00	$ 2,647.70	41%	$ 3,851.20
7	**AIR RELEASE AND VACUUM VALVE ASSEMBLY (INCLUDING PR**	**1.0**	$ 4,189.24	$ 4,189.24	-	$ -	$0.00	$ -	0%	$ 4,189.24
	MANHOLE ITEMS									
8	**48" PRECAST CONCRETE SEWER MANHOLE (0-6')**	**3.0**	$ 2,689.82	$ 8,069.46	1	$ 2,689.82	$0.00	$ 2,689.82	33%	$ 5,379.64
9	**48" PRECAST CONCRETE SEWER MANHOLE (6'-8')**	**8.0**	$ 3,176.78	$ 25,414.24	5	$ 15,883.90	$0.00	$ 15,883.90	63%	$ 9,530.34
10	**48" PRECAST CONCRETE SEWER MANHOLE (8'-10')**	**1.0**	$ 3,658.87	$ 3,658.87	1	$ 3,658.87	$0.00	$ 3,658.87	100%	$ -
11	**48" PRECAST CONCRETE SEWER MANHOLE (10'-12')**	**1.0**	$ 4,190.30	$ 4,190.30	-	$ -	$0.00	$ -	0%	$ 4,190.30
12	**48" PRECAST CONCRETE SEWER MANHOLE (12'-14')**	**1.0**	$ 4,382.73	$ 4,382.73	1	$ 4,382.73	$0.00	$ 4,382.73	100%	$ -
	SEWER SERVICE ITEMS									
13	**6" SDR 26 PVC SEWER PIPE FOR SERVICES (ALL DEPTHS)**	**942.0**	$ 10.60	$ 9,985.20	513	$ 5,437.80	$0.00	$ 5,437.80	54%	$ 4,547.40
14	**8" X 8" X 6" PVC TEE**	**8.0**	$ 323.75	$ 2,590.00	6	$ 1,942.50	$0.00	$ 1,942.50	75%	$ 647.50
15	**6" PVC CLEANOUT**	**8.0**	$ 359.74	$ 2,877.92	7	$ 2,518.18	$0.00	$ 2,518.18	88%	$ 359.74
	LIFT STATION ITEMS									
16	**LIFT STATION INCL CLEARING AND GRUBBING, BORROW MAT**	**1.0**	$ 207,236.80	$ 207,236.80	1	$ 155,427.60	$0.00	$ 155,427.60	75%	$ 51,809.20
	MISCELLANEOUS CONSTRUCTION ITEMS									
17	**ABANDONMENT OF SEPTIC TANKS**	**7.0**	$ 359.68	$ 2,517.76	-	$ -	$0.00	$ -	0%	$ 2,517.76
18	**DROP MANHOLE ASSEMBLY (ALL DEPTHS)**	**3.0**	$ 869.23	$ 2,607.69	-	$ -	$0.00	$ -	0%	$ 2,607.69
19	**WATER SERVICE REPAIR (INCLUDING SERVICE TUBING, FITTIN**	**4.0**	$ 599.95	$ 2,399.80	-	$ -	$0.00	$ -	0%	$ 2,399.80
20	**CRUSHED AGGREGRATE (SIZE 825)**	**612.0**	$ 44.96	$ 27,515.52	12	$ 543.12	$0.00	$ 543.12	2%	$ 26,972.40
	TOTALS			**$ 373,583.66**		**$ 240,917.80**	**$0.00**	**$ 240,917.80**		**$ 132,665.86**

EJCDC No. C-620 (2002 Edition) 7/24/2018

Prepared by the Engineers' Joint Contract Documents Committee and endorsed by the Associated General Contractors of America and the Construction Specifications Institute.

Progress Estimate

Contractor's Application

For (contract):	COMPRENHENSIVE SEWER PHASE 5				Application Number:	43286				
Application Period:	5/26/2018 TO 6/25/2018				Application Date:	5-Jul-18				
	A			B	C	D	E	F		G
Pay Item	Item Description	Bid Quantity	Unit Price	Bid Value	Estimated Quantity Installed	Value	Materials Stored (not in C)	Total Completed and Stored to Date (D + E)	% (F)	Balance to Finish (B - F)
	Subtotal from Previous Page			$ 373,583.66		$ 240,917.80	$0.00	$ 240,917.80		$ 132,665.86
21	SELECT FILL MATERIAL (CLASS 9, GROUP C), LVM	2495.0	$ 10.79	$ 26,921.05	56	$ 604.24	$0.00	$ 604.24	2%	$ 26,316.81
22	HOT MIX ASPHALT, ST, 9.5MM	208.0	$ 167.85	$ 34,912.80	-	$ -	$0.00	$ -	0%	$ 34,912.80
23	CONCRETE PAVEMENT REPAIR (ALL DEPTHS)	57.0	$ 59.95	$ 3,417.15	-	$ -	$0.00	$ -	0%	$ 3,417.15
24	REMOVAL OF CROSS DRAINS (ALL TYPES AND SIZES)	16.0	$ 11.99	$ 191.84	-	$ -	$0.00	$ -	0%	$ 191.84
25	30" REINFORCED CONCRETE PIPE, CLASS 3, RUBBER GASKETS	16.0	$ 95.92	$ 1,534.72	-	$ -	$0.00	$ -	0%	$ 1,534.72
26	CLASS "B" CONCRETE, MINOR STRUCTURES	5.0	$ 2,353.82	$ 11,769.10	-	$ -	$0.00	$ -	0%	$ 11,769.10
27	GRASSING	1.0	$ 3,896.56	$ 3,896.56	-	$ -	$0.00	$ -	0%	$ 3,896.56
28	EROSION CONTROL	1.0	$ 6,594.17	$ 6,594.17	1	$ 3,297.09	$0.00	$ 3,297.09	50%	$ 3,297.09
29	MOBILIZATION	1.0	$ 44,960.26	$ 44,960.26	1	$ 44,960.26	$0.00	$ 44,960.26	100%	$ -
30	MAINTENANCE OF TRAFFIC	1.0	$ 29,973.50	$ 29,973.50	1	$ 22,480.13	$0.00	$ 22,480.13	75%	$ 7,493.38
	SITE 2-CORRINE STREET, EMERALD LANE & DUKE AVENUE									
1	8" SDR 26 PVC SEWER PIPE (6'-8')	243.0	$ 24.46	$ 5,943.78	448	$ 10,958.08	$0.00	$ 10,958.08	184%	$ (5,014.30)
2	8" SDR 26 PVC SEWER PIPE (8'-10')	635.0	$ 26.56	$ 16,865.60	865	$ 22,974.40	$0.00	$ 22,974.40	136%	$ (6,108.80)
3	8" SDR 26 PVC SEWER PIPE (10'-12')	125.0	$ 28.95	$ 3,618.75	115	$ 3,329.25	$0.00	$ 3,329.25	92%	$ 289.50
4	8" SDR 26 PVC SEWER PIPE (12'-14')	137.0	$ 31.35	$ 4,294.95	145	$ 4,545.75	$0.00	$ 4,545.75	106%	$ (250.80)
5	8" SDR 26 PVC SEWER PIPE (14'-16')	102.0	$ 36.15	$ 3,687.30	102	$ 3,687.30	$0.00	$ 3,687.30	100%	$ -
6	8" SDR 26 PVC SEWER PIPE (16'-18')	187.0	$ 40.94	$ 7,655.78	327	$ 13,387.38	$0.00	$ 13,387.38	175%	$ (5,731.60)
7	8" SDR 11 HDPE SEWER SERVICE BORE	275.0	$ 59.47	$ 16,354.25	268	$ 15,937.96	$0.00	$ 15,937.96	97%	$ 416.29
8	15" SDR 26 PVC SEWER PIPE (6'-8')	733.0	$ 38.50	$ 28,220.50	647	$ 24,909.50	$0.00	$ 24,909.50	88%	$ 3,311.00
9	15" SDR 26 PVC SEWER PIPE (8'-10')	336.0	$ 43.29	$ 14,545.44	315	$ 13,636.35	$0.00	$ 13,636.35	94%	$ 909.09
10	15" SDR 26 PVC SEWER PIPE (10'-12')	225.0	$ 48.09	$ 10,820.25	266	$ 12,791.94	$0.00	$ 12,791.94	118%	$ (1,971.69)
11	24" STEEL CASING (BORED)	60.0	$ 213.46	$ 12,807.60	30	$ 6,403.80	$0.00	$ 6,403.80	50%	$ 6,403.80
	MANHOLE ITEMS									
12	48" PRECAST CONCRETE SEWER MANHOLE (8'-10')	3.0	$ 3,179.29	$ 9,537.87	4	$ 12,717.16	$0.00	$ 12,717.16	133%	$ (3,179.29)
13	48" PRECAST CONCRETE SEWER MANHOLE (12'-14')	1.0	$ 3,663.36	$ 3,663.36	1	$ 3,663.36	$0.00	$ 3,663.36	100%	$ -
	TOTALS			$ 675,770.24		$ 461,201.74	$0.00	$ 461,201.74		$ 214,568.50

EJCDC No. C-620 (2002 Edition)

Prepared by the Engineers' Joint Contract Documents Committee and endorsed by the Associated General Contractors of America and the Construction Specifications Institute.

Progress Estimate **Contractor's Application**

For (contract):	COMPRENHENSIVE SEWER PHASE 5				Application Number:	43286				
Application Period:	5/26/2018 TO 6/25/2018				Application Date:	5-Jul-18				
	A			B	C	D	E	F		G
Pay Item	Item Description	Bid Quantity	Unit Price	Bid Value	Estimated Quantity Installed	Value	Materials Stored (not in C)	Total Completed and Stored to Date (D + E)	% (F)	Balance to Finish (B - F)
	Subtotal from Previous Page			$ 675,770.24		$ 461,201.74	$0.00	$ 461,201.74		$ 214,568.50
14	**48" PRECAST CONCRETE SEWER MANHOLE (14'-16')**	**1.0**	$ 4,675.87	$ 4,675.87	1	$ 4,675.87	$0.00	$ 4,675.87	100%	$ -
15	**60" PRECAST CONCRETE SEWER MANHOLE (6'-8')**	**3.0**	$ 4,615.92	$ 13,847.76	2	$ 9,231.84	$0.00	$ 9,231.84	67%	$ 4,615.92
16	**60" PRECAST CONCRETE SEWER MANHOLE (10'-12')**	**2.0**	$ 4,991.79	$ 9,983.58	3	$ 14,975.37	$0.00	$ 14,975.37	150%	$ (4,991.79)
17	**DROP MANHOLE ASSEMBLY (ALL DEPTHS)**	**3.0**	$ 869.23	$ 2,607.69	1	$ 869.23	$0.00	$ 869.23	33%	$ 1,738.46
18	**DEMOLITION AND REMOVAL OF EXISTING SEWER MANHOLE**	**8.0**	$ 1,498.68	$ 11,989.44	8	$ 11,989.44	$0.00	$ 11,989.44	100%	$ -
	SEWER SERVICE ITEMS									
19	**6" SDR 26 PVC SEWER PIPE FOR SERVICES (ALL DEPTHS)**	**270.0**	$ 10.56	$ 2,851.20	846	$ 8,933.76	$0.00	$ 8,933.76	313%	$ (6,082.56)
20	**8" X 8" X 6" PVC TEE**	**3.0**	$ 323.75	$ 971.25	15	$ 4,856.25	$0.00	$ 4,856.25	500%	$ (3,885.00)
21	**SERVICE CONNECTION (INSERT A TEE)**	**6.0**	$ 585.08	$ 3,510.48	17	$ 9,946.36	$0.00	$ 9,946.36	283%	$ (6,435.88)
22	**6" PVC CLEANOUT**	**9.0**	$ 370.47	$ 3,334.23	32	$ 11,855.04	$0.00	$ 11,855.04	356%	$ (8,520.81)
	MISCELLANOUS CONSTRUCTION ITEMS									
23	**WATER SERVICE REPAIR (INCLUDING SERIVCE TUBING, FITTIN**	**8.0**	$ 669.01	$ 5,352.08	11	$ 7,359.11	$0.00	$ 7,359.11	138%	$ (2,007.03)
24	**CRUSHED AGGREGRATE (SIZE 825)**	**1387.0**	$ 44.96	$ 62,359.52	1,333.32	$ 59,946.07	$0.00	$ 59,946.07	96%	$ 2,413.45
25	**SELECT FILL MATERIAL (CLASS 9, GROUP C), LVM**	**8090.0**	$ 11.39	$ 92,145.10	3,332	$ 37,951.48	$0.00	$ 37,951.48	41%	$ 54,193.62
26	**HOT MIX ASPHALT, ST, 9.5MM**	**530.0**	$ 167.85	$ 88,960.50	-	$ -	$0.00	$ -	0%	$ 88,960.50
27	**CONCRETE PAVEMENT REPAIR (ALL DEPTHS)**	**25.0**	$ 59.95	$ 1,498.75	26	$ 1,563.50	$0.00	$ 1,563.50	104%	$ (64.75)
28	**REMOVAL OF CROSS DRAINS (ALL TYPES AND SIZES)**	**180.0**	$ 11.99	$ 2,158.20	288	$ 3,453.12	$0.00	$ 3,453.12	160%	$ (1,294.92)
29	**12" REINFORCED CONCRETE PIPE, CLASS 3, RUBBER GASKETS**	**24.0**	$ 39.57	$ 949.68	-	$ -	$0.00	$ -	0%	$ 949.68
30	**18" REINFORCED CONCRETE PIPE, CLASS 3, RUBBER GASKETS**	**64.0**	$ 43.16	$ 2,762.24	168	$ 7,250.88	$0.00	$ 7,250.88	263%	$ (4,488.64)
31	**21" REINFORCED CONCRETE PIPE, CLASS 3, RUBBER GASKETS**	**40.0**	$ 52.75	$ 2,110.00	-	$ -	$0.00	$ -	0%	$ 2,110.00
32	**24" REINFORCED CONCRETE PIPE, CLASS 3, RUBBER GASKETS**	**48.0**	$ 70.74	$ 3,395.52	120	$ 8,488.80	$0.00	$ 8,488.80	250%	$ (5,093.28)
33	**CLASS "B" CONCRETE, MINOR STRUCTURES**	**1.0**	$ 2,381.10	$ 2,381.10	-	$ -	$0.00	$ -	0%	$ 2,381.10
34	**GRASSING**	**1.0**	$ 3,896.56	$ 3,896.56	-	$ -	$0.00	$ -	0%	$ 3,896.56
35	**EROSION CONTROL**	**1.0**	$ 7,793.11	$ 7,793.11	1	$ 7,793.11	$0.00	$ 7,793.11	100%	$ -
36	**MOBILIZATION**	**1.0**	$ 41,962.90	$ 41,962.90	1.00	$ 41,962.90	$0.00	$ 41,962.90	100%	$ -
	TOTALS			**$ 1,047,267.00**		**$ 714,303.86**	**$0.00**	**$ 714,303.86**		**$ 332,963.14**

EJCDC No. C-620 (2002 Edition)

Prepared by the Engineers' Joint Contract Documents Committee and endorsed by the Associated General Contractors of America and the Construction Specifications Institute.

Progress Estimate **Contractor's Application**

For (contract):	COMPRENHENSIVE SEWER PHASE 5				Application Number:	43286				
Application Period:	5/26/2018 TO 6/25/2018				Application Date:	5-Jul-18				
	A			B	C	D	E	F		G
Pay Item	Item Description	Bid Quantity	Unit Price	Bid Value	Estimated Quantity Installed	Value	Materials Stored (not in C)	Total Completed and Stored to Date (D + E)	% (F)	Balance to Finish (B - F)
	Subtotal from Previous Page			$ 1,047,267.00		$ 714,303.86	$0.00	$ 714,303.86		$ 332,963.14
37	**MAINTENANCE OF TRAFFIC**	1.0	$ 29,973.50	$ 29,973.50	1	$ 29,973.50	$0.00	$ 29,973.50	100%	$ -
0	0	0.0	$ -	$ -	-	$ -	$0.00	$ -	#DIV/0!	$ -
0	0	0.0	$ -	$ -	-	$ -	$0.00	$ -	#DIV/0!	$ -
0	0	0.0	$ -	$ -	-	$ -	$0.00	$ -	#DIV/0!	$ -
0	0	0.0	$ -	$ -	-	$ -	$0.00	$ -	#DIV/0!	$ -
0	0	0.0	$ -	$ -	-	$ -	$0.00	$ -	#DIV/0!	$ -
0	0	0.0	$ -	$ -	-	$ -	$0.00	$ -	#DIV/0!	$ -
0	0	0.0	$ -	$ -	-	$ -	$0.00	$ -	#DIV/0!	$ -
0	0	0.0	$ -	$ -	-	$ -	$0.00	$ -	#DIV/0!	$ -
0	0	0.0	$ -	$ -	-	$ -	$0.00	$ -	#DIV/0!	$ -
0	0	0.0	$ -	$ -	-	$ -	$0.00	$ -	#DIV/0!	$ -
0	0	0.0	$ -	$ -	-	$ -	$0.00	$ -	#DIV/0!	$ -
0	0	0.0	$ -	$ -	-	$ -	$0.00	$ -	#DIV/0!	$ -
0	0	0.0	$ -	$ -	-	$ -	$0.00	$ -	#DIV/0!	$ -
0	0	0.0	$ -	$ -	-	$ -	$0.00	$ -	#DIV/0!	$ -
0	0	0.0	$ -	$ -	-	$ -	$0.00	$ -	#DIV/0!	$ -
0	0	0.0	$ -	$ -	-	$ -	$0.00	$ -	#DIV/0!	$ -
0	0	0.0	$ -	$ -	-	$ -	$0.00	$ -	#DIV/0!	$ -
0	0	0.0	$ -	$ -	-	$ -	$0.00	$ -	#DIV/0!	$ -
0	0	0.0	$ -	$ -	-	$ -	$0.00	$ -	#DIV/0!	$ -
0	0	0.0	$ -	$ -	-	$ -	$0.00	$ -	#DIV/0!	$ -
0	0	0.0	$ -	$ -	-	$ -	$0.00	$ -	#DIV/0!	$ -
0	0	0.0	$ -	$ -	-	$ -	$0.00	$ -	#DIV/0!	$ -
	TOTALS			**$ 1,077,240.50**		**$ 744,277.36**	**$0.00**	**$ 744,277.36**		**$ 332,963.14**

Monthly Totals

	DESCRIPTION	1 Estimated Quantity Installed	2 Estimated Quantity Installed	3 Estimated Quantity Installed	4 Estimated Quantity Installed	5 Estimated Quantity Installed	6 Estimated Quantity Installed	7 Estimated Quantity Installed	8 Estimated Quantity Installed	9 Estimated Quantity Installed	10 Estimated Quantity Installed	TOTAL Estimated Quantity Installed
	SITE 1-DOGWOOD DRIVE											0
1	4" 160 PSI PVC SANITARY SEWER FORCE MAIN (ALL DEPTHS)						745					745
2	8" SDR 26 PVC SEWER PIPE (0-6')					423	543					966
3	8" SDR 26 PVC SEWER PIPE (6'-8')					151	184					335
4	8" SDR 26 PVC SEWER PIPE (8'-10')					96	50					146
5	8" SDR 26 PVC SEWER PIPE (10'-12')						48					48
6	8" SDR 26 PVC SEWER PIPE (12'-14')						55					55
7	AIR RELEASE AND VACUUM VALVE ASSEMBLY (INCLUDING PRECAST CONCRETE MANHOLE)											0
	MANHOLE ITEMS											0
8	48" PRECAST CONCRETE SEWER MANHOLE (0-6')						1					1
9	48" PRECAST CONCRETE SEWER MANHOLE (6'-8')					3	2					5
10	48" PRECAST CONCRETE SEWER MANHOLE (8'-10')					1						1
11	48" PRECAST CONCRETE SEWER MANHOLE (10'-12')											0
12	48" PRECAST CONCRETE SEWER MANHOLE (12'-14')						1					1
	SEWER SERVICE ITEMS											0
13	6" SDR 26 PVC SEWER PIPE FOR SERVICES (ALL DEPTHS)					144	369					513
14	8" X 8" X 6" PVC TEE					2	4					6
15	6" PVC CLEANOUT					3	4					7
	LIFT STATION ITEMS											0
16	LIFT STATION INCL CLEARING AND GRUBBING, BORROW MATERIAL, CRUSHED AGGREGRATE, CONCRETE WET WELL, PUMPS, ELECTRICAL, DISCONNECT, VAL					0.25	0.5					0.75
	MISCELLANEOUS CONSTRUCTION ITEMS											0
17	ABANDONMENT OF SEPTIC TANKS											0
18	DROP MANHOLE ASSEMBLY (ALL DEPTHS)											0
19	WATER SERVICE REPAIR (INCLUDING SERVICE TUBING, FITTINGS, CORP STOP, CURB STOP, TAPPING SADDLE, ETC.)											0
20	CRUSHED AGGREGRATE (SIZE 825)					12.08						12.08

Monthly Totals

	DESCRIPTION	1 Estimated Quantity Installed	2 Estimated Quantity Installed	3 Estimated Quantity Installed	4 Estimated Quantity Installed	5 Estimated Quantity Installed	6 Estimated Quantity Installed	7 Estimated Quantity Installed	8 Estimated Quantity Installed	9 Estimated Quantity Installed	10 Estimated Quantity Installed	TOTAL Estimated Quantity Installed
21	SELECT FILL MATERIAL (CLASS 9, GROUP C), LVM					56						56
22	HOT MIX ASPHALT, ST, 9.5MM											0
23	CONCRETE PAVEMENT REPAIR (ALL DEPTHS)											0
24	REMOVAL OF CROSS DRAINS (ALL TYPES AND SIZES)											0
25	30" REINFORCED CONCRETE PIPE, CLASS 3, RUBBER GASKETS											0
26	CLASS "B" CONCRETE, MINOR STRUCTURES											0
27	GRASSING											0
28	EROSION CONTROL						0.5					0.5
29	MOBILIZATION					1						1
30	MAINTENANCE OF TRAFFIC					0.5	0.25					0.75
	SITE 2-CORRINE STREET, EMERALD LANE & DUKE AVENUE											0
1	8" SDR 26 PVC SEWER PIPE (6'-8')			28	420							448
2	8" SDR 26 PVC SEWER PIPE (8'-10')			111	754							865
3	8" SDR 26 PVC SEWER PIPE (10'-12')			115								115
4	8" SDR 26 PVC SEWER PIPE (12'-14')			145								145
5	8" SDR 26 PVC SEWER PIPE (14'-16')			77	25							102
6	8" SDR 26 PVC SEWER PIPE (16'-18')			215	112							327
7	8" SDR 11 HDPE SEWER SERVICE BORE			268								268
8	15" SDR 26 PVC SEWER PIPE (6'-8')		647									647
9	15" SDR 26 PVC SEWER PIPE (8'-10')	200	115									315
10	15" SDR 26 PVC SEWER PIPE (10'-12')	98	168									266
11	24" STEEL CASING (BORED)		30									30
	MANHOLE ITEMS											0
12	48" PRECAST CONCRETE SEWER MANHOLE (8'-10')				4							4
13	48" PRECAST CONCRETE SEWER MANHOLE (12'-14')			1								1

Monthly Totals

	DESCRIPTION	1 Estimated Quantity Installed	2 Estimated Quantity Installed	3 Estimated Quantity Installed	4 Estimated Quantity Installed	5 Estimated Quantity Installed	6 Estimated Quantity Installed	7 Estimated Quantity Installed	8 Estimated Quantity Installed	9 Estimated Quantity Installed	10 Estimated Quantity Installed	TOTAL Estimated Quantity Installed
14	48" PRECAST CONCRETE SEWER MANHOLE (14'-16')			1								1
15	60" PRECAST CONCRETE SEWER MANHOLE (6'-8')		2									2
16	60" PRECAST CONCRETE SEWER MANHOLE (10'-12')	2	1									3
17	DROP MANHOLE ASSEMBLY (ALL DEPTHS)		1									1
18	DEMOLITION AND REMOVAL OF EXISTING SEWER MANHOLE		5		3							8
	SEWER SERVICE ITEMS											0
19	6" SDR 26 PVC SEWER PIPE FOR SERVICES (ALL DEPTHS)	17	236	333	260							846
20	8" X 8" X 6" PVC TEE			10	5							15
21	SERVICE CONNECTION (INSERT A TEE)	1	16									17
22	6" PVC CLEANOUT	1	13	11	7							32
	MISCELLANOUS CONSTRUCTION ITEMS											0
23	WATER SERVICE REPAIR (INCLUDING SERIVCE TUBING, FITTINGS, CORP STOP, CURB STOP, TAPPING SADDL		3	8								11
24	CRUSHED AGGREGRATE (SIZE 825)	111.39	538.72	451.21	232							1333.32
25	SELECT FILL MATERIAL (CLASS 9, GROUP C), LVM		716	1762	854							3332
26	HOT MIX ASPHALT, ST, 9.5MM											0
27	CONCRETE PAVEMENT REPAIR (ALL DEPTHS)				26.08							26.08
28	REMOVAL OF CROSS DRAINS (ALL TYPES AND SIZES)		88		200							288
29	12" REINFORCED CONCRETE PIPE, CLASS 3, RUBBER GASKETS											0
30	18" REINFORCED CONCRETE PIPE, CLASS 3, RUBBER GASKETS	40	48		80							168
31	21" REINFORCED CONCRETE PIPE, CLASS 3, RUBBER GASKETS											0
32	24" REINFORCED CONCRETE PIPE, CLASS 3, RUBBER GASKETS				120							120
33	CLASS "B" CONCRETE, MINOR STRUCTURES		0									0
34	GRASSING											0
35	EROSION CONTROL				0.5		0.5					1
36	MOBILIZATION	0.5	0.5									1

Monthly Totals

	DESCRIPTION	1 Estimated Quantity Installed	2 Estimated Quantity Installed	3 Estimated Quantity Installed	4 Estimated Quantity Installed	5 Estimated Quantity Installed	6 Estimated Quantity Installed	7 Estimated Quantity Installed	8 Estimated Quantity Installed	9 Estimated Quantity Installed	10 Estimated Quantity Installed	TOTAL Estimated Quantity Installed
37	MAINTENANCE OF TRAFFIC		0.5		0.5							1
0	0											0
0	0											0
0	0											0
0	0											0
0	0											0
0	0											0
0	0											0
0	0											0
0	0											0
0	0											0
0	0											0
0	0											0
0	0											0
0	0											0
0	0											0
0	0											0
0	0											0
0	0											0
0	0											0
0	0											0
0	0											0
0	0											0
0	0											0

sdw
Engineering Progress

July 25, 2018

City of Hattiesburg
Post Office Box 1898
Hattiesburg MS 39403-1898

Attn: Lamar Rutland, P.E.

**RE: Comprehensive Water Improvements Ph II -
City of Hattiesburg**

Dear Mr. Rutland:

Enclosed please find Pay Estimate No. 6 for the above referenced project in the amount of $189,291.09.

Should you have any questions and/or comments, please, do not hesitate to contact me.

Sincerely,

Kyle D. Wallace, P.E.
Project Engineer

/aa

cc: Terry Jackson, SDW

RECEIVED 7/30/18

093695.7245.51
MB 2017-340

301 Second Ave. | Hattiesburg, MS 39401 | (p) 601.544.1821 | (f) 601.544.0501 | sd-w.com

Contractor's Application For Payment No. 6

	Application Period: Beginning: 5/26/2018 Ending: 6/25/2018	Application Date: 5-Jul-18
To (Owner): City of Hattiesburg, Mississippi	From (Contractor): C.B. Developers, Inc.	Via (Engineer): Shows, Dearman & Waits Inc.
Project: Comprehensive Water Improvements Phase II	Contract:	
Owner's Contract No.: Not Applicable	Contractor's Project No.:	Engineer's Project No.:

Change Order Summary

Approved Change Orders		
Number	Additions	Deductions
TOTALS	$ -	$ -
NET CHANGE BY CHANGE ORDERS	$ -	

1. ORIGINAL CONTRACT PRICE	$	2,054,414.75
2. Net change by Change Orders	$	-
3. CURRENT CONTRACT PRICE (LINE 1 + 2)	$	2,054,414.75
4. TOTAL COMPLETED AND STORED TO DATE (Column F on Progress Estimates)	$	1,690,310.31
5. RETAINAGE:		
a. 5.0 % x Work Completed	$	76,242.43
b. 5.0% x Stored Material	$	8,273.09
c. Total Retainage (line 5a + line 5b)	$	84,515.52
6. AMOUNT ELIGIBLE TO DATE (Line 4 - Line 5c)	$	1,605,794.79
7. LESS PREVIOUS PAYMENTS (Line 6 from prior Application)	$	1,416,503.70
8. AMOUNT DUE THIS APPLICATION	$	***189,291.09***
9. BALANCE TO FINISH, PLUS RETAINAGE (Column G on Progress Estimate + Line 5 above)	$	448,619.97

CONTRACTOR'S CERTIFICATION

The undersigned Contractor certifies that: (1) all previous progress payments received from Owner on account of Work done under the Contract have been applied on account to discharge Contractor's legitimate obligations incurred in connection with Work covered by prior Applications for Payment; (2) title of all Work, materials and equipment incorporated in said Work or otherwise listed in or covered by this Application for Payment will pass to Owner at time of payment free and clear of all Liens, security interests and encumbrances (except such as are covered by a Bond acceptable to Owner indemnifying Owner against any such Liens, security interest or encumbrances); and (3) all Work covered by this Application for Payment is in accordance with the Contract Documents and is not defective.

By: Date: 7-25-18

Payment of: $189,291.09
(Line 8 or other - attach explanation of other amount)

Is recommended by: (Engineer) (Date) 7-27-18

Payment of: $189,291.09
(Line 8 or other - attach explanation of other amount)

Is approved by: (Owner) (Date)

Is approved by: (Owner) (Date)

Approved by: (Funding Agency, if applicable) (Date)

Progress Estimate

6 ·actor's Application

For (contract):	Comprehensive Water Improvements Phase II	5/26/2018	6/25/2018	Application Num	7/5/2018	6
Application Period:	5/26/2018 TO 6/25/2018			Application Date:	5-Jul-18	

	A			B	C	D	E	F		G
Pay Item	Item Description	Bid Quantity	Unit Price	Bid Value	Estimated Quantity Installed	Value	Materials Stored (not in C)	Total Completed and Stored to Date (D + E)	% (F)	Balance to Finish (B - F)
	WATER PIPE ITEMS									
1	**4" CLASS 350 DUCTILE IRON WATER PIPE (OPEN CUT)**	**260.0**	$ 25.44	$ 6,614.40	104	$ 2,645.76	$ 2,442.96	$ 5,088.72	77%	$ 1,525.68
2	**6" CLASS 350 DUCTILE IRON WATER PIPE (OPEN CUT)**	**280.0**	$ 23.74	$ 6,647.20	52	$ 1,234.48	$ 2,355.24	$ 3,589.72	54%	$ 3,057.48
3	**8" CLASS 350 DUCTILE IRON WATER PIPE (OPEN CUT)**	**590.0**	$ 23.72	$ 13,994.80	1,700	$ 40,324.00	$ -	$ 40,324.00	288%	$ (26,329.20)
4	**12" CLASS 350 DUCTILE IRON WATER PIPE (OPEN CUT)**	**27000.0**	$ 31.08	$ 839,160.00	24,732	$ 768,670.56	$ 50,054.76	$ 818,725.32	98%	$ 20,434.68
5	**12" CLASS 350 DUCTILE IRON WATER PIPE (BORED-NO CASING**	**1090.0**	$ 66.98	$ 73,008.20	1,027	$ 68,788.46	$ -	$ 68,788.46	94%	$ 4,219.74
6	**16" 200 PSI, DR9, HDPE (OPEN CUT)(INCL ADAPTER FITTINGS)**	**780.0**	$ 111.27	$ 86,790.60	-	$ -	$ 45,466.20	$ 45,466.20	52%	$ 41,324.40
7	**16" 200 PSI, DR9, HDPE (DIRECTION BORE)(INCL ADAPTER FIT**	**460.0**	$ 133.85	$ 61,571.00	1,157	$ 154,864.45	$ -	$ 154,864.45	252%	$ (93,293.45)
	CASING ITEMS									
8	**18" STEEL CASING, 0.25" WT (OPEN CUT)**	**20.0**	$ 112.00	$ 2,240.00	40	$ 4,480.00	$ -	$ 4,480.00	200%	$ (2,240.00)
9	**14" STEEL CASING, 0.25" WT (BORED)**	**40.0**	$ 94.99	$ 3,799.60	-	$ -	$ 955.60	$ 955.60	25%	$ 2,844.00
10	**18" STEEL CASING, 0.25" WT (BORED)**	**610.0**	$ 112.44	$ 68,588.40	590	$ 66,339.60	$ 733.20	$ 67,072.80	98%	$ 1,515.60
11	**20" STEEL CASING, 0.375"WT (BORED-RAILROAD)**	**740.0**	$ 295.72	$ 218,832.80	-	$ -	$ -	$ -		$ 218,832.80
	CONNECTION ITEMS									
12	**CONNECTION: PROPOSED 12" TO EXISTING 12" (STRAIGHT CC**	**2.0**	$ 1,509.99	$ 3,019.98	2	$ 3,019.98	$ -	$ 3,019.98	100%	$ -
13	**CONNECTION: PROPOSED 12" TO EXISTING 12" (HOT TAP w/**	**3.0**	$ 6,603.33	$ 19,809.99	1	$ 6,603.33	$ 5,786.40	$ 12,389.73	63%	$ 7,420.26
14	**CONNECTION: PROPOSED 12" TO PROPOSED 12" (TEE & OTHI**	**5.0**	$ 1,741.31	$ 8,706.55	3	$ 5,223.93	$ 1,627.64	$ 6,851.57	79%	$ 1,854.98
15	**CONNECTION: PROPOSED 12" TO PROPOSED 12" & 8" (TEE &**	**1.0**	$ 2,191.77	$ 2,191.77	1	$ 2,191.77	$ -	$ 2,191.77	100%	$ -
16	**CONNECTION: PROPOSED 12" TO PROPOSED 8" (TEE & OTHEI**	**2.0**	$ 1,723.93	$ 3,447.86	-	$ -	$ 684.46	$ 684.46	20%	$ 2,763.40
17	**CONNECTION: PROPOSED 12" TO PROPOSED 12" & EXISTING**	**1.0**	$ 3,061.78	$ 3,061.78	1	$ 3,061.78	$ -	$ 3,061.78	100%	$ -
18	**CONNECTION: PROPOSED 12" TO PROPOSED 12" & EXISTING**	**2.0**	$ 2,263.80	$ 4,527.60	3	$ 6,791.40	$ -	$ 6,791.40	150%	$ (2,263.80)
19	**CONNECTION: PROPOSED 12" TO EXISTING 6" (TEE & OTHER**	**10.0**	$ 1,878.23	$ 18,782.30	1	$ 1,878.23	$ 2,328.48	$ 4,206.71	22%	$ 14,575.59
20	**CONNECTION: PROPOSED 12" TO EXISTING 6" & 4" (TEES & O**	**1.0**	$ 2,813.19	$ 2,813.19	-	$ -	$ 258.72	$ 258.72	9%	$ 2,554.47
21	**CONNECTION: PROPOSED 12" TO EXISTING 6" & 4" (CROSS &**	**1.0**	$ 3,093.80	$ 3,093.80	1	$ 3,093.80	$ -	$ 3,093.80	100%	$ -
22	**CONNECTION: PROPOSED 12" TO EXISTING 4" (TEE & OTHER**	**12.0**	$ 2,025.74	$ 24,308.88	5	$ 10,128.70	$ 1,811.04	$ 11,939.74	49%	$ 12,369.14
	TOTALS			**$ 1,475,010.70**		**$ 1,149,340.23**	**$114,504.70**	**$ 1,263,844.93**		**$ 211,165.77**

EJCDC No. C-620 (2002 Edition) 6/5/2018

Prepared by the Engineers' Joint Contract Documents Committee and endorsed by the Associated General Contractors of America and the Construction Specifications Institute.

Progress Estimate

Contractor's Application

For (contract): Comprehensive Water Improvements Phase II

Application Period: 5/26/2018 TO 6/25/2018

Application Number: 6

Application Date: 5-Jul-18

	A			B	C	D	E	F		G
Pay Item	Item Description	Bid Quantity	Unit Price	Bid Value	Estimated Quantity Installed	Value	Materials Stored (not in C)	Total Completed and Stored to Date (D + E)	% (F)	Balance to Finish (B - F)
	Subtotal from Previous Page			$ 1,475,010.70		$ 1,149,340.23	$114,504.70	$ 1,263,844.93		$ 211,165.77
23	CONNECTION: PROPOSED 8" TO EXISTING 12" (HOT TAP w/ V	1.0	$ 3,660.35	$ 3,660.35	1	$ 3,660.35	$ -	$ 3,660.35	100%	$ -
24	CONNECTION: PROPOSED 8" TO EXISTING 6" (TEE & OTHER FI	1.0	$ 1,702.56	$ 1,702.56	1	$ 1,702.56	$ -	$ 1,702.56	100%	$ -
25	CONNECTION: PROPOSED 8" TO EXISTING 6" & 4" (TEES & OT	1.0	$ 2,657.87	$ 2,657.87	2	$ 5,315.74	$ -	$ 5,315.74	200%	$ (2,657.87)
	VALVE ITEMS									
26	4" GATE VALVE	9.0	$ 684.95	$ 6,164.55	12	$ 8,219.40	$ -	$ 8,219.40	133%	$ (2,054.85)
27	6" GATE VALVE	14.0	$ 840.19	$ 11,762.66	14	$ 11,762.66	$ -	$ 11,762.66	100%	$ -
28	8" GATE VALVE	4.0	$ 1,154.21	$ 4,616.84	9	$ 10,387.89	$ -	$ 10,387.89	225%	$ (5,771.05)
29	12" GATE VALVE	66.0	$ 2,036.87	$ 134,433.42	48	$ 97,769.76	$ 27,547.02	$ 125,316.78	93%	$ 9,116.64
	FIRE PROTECTION ITEMS									
30	3 WAY FIRE HYDRANT w/ APPURTENANCES (INCL. TEE, VALVE	42.0	$ 3,708.92	$ 155,774.64	35	$ 129,812.20	$ 18,515.07	$ 148,327.27	95%	$ 7,447.37
31	6" FIRE SUPPRESSION SYSTEM CONNECTION (INCL. TEE, VALVI	1.0	$ 4,146.85	$ 4,146.85	-	$ -	$ -	$ -		$ 4,146.85
	SERVICE ITEMS									
32	RESIDENTIAL SERVICE TAP (ALL SIZES) (INCL. OPEN CUT SERVIC	99.0	$ 445.19	$ 44,073.81	103	$ 45,854.57	$ -	$ 45,854.57	104%	$ (1,780.76)
33	COMMERCIAL SERVICE TAP (ALL SIZES) (INCL. OPEN CUT SERV	17.0	$ 1,085.64	$ 18,455.88	8	$ 8,685.12	$ 4,894.92	$ 13,580.04	74%	$ 4,875.84
34	SERVICE TUBING (BORED) (ALL SIZES)	1585.0	$ 4.13	$ 6,546.05	2,754	$ 11,374.02	$ -	$ 11,374.02	174%	$ (4,827.97)
35	RESIDENTIAL METER (INCL. METER, METER BOX, CITY FEES, ET	15.0	$ 550.23	$ 8,253.45	-	$ -	$ -	$ -		$ 8,253.45
	REMOVAL ITEMS									
36	REMOVAL OF FIRE HYDRANT AND APPURTENANCES	24.0	$ 409.36	$ 9,824.64	1	$ 409.36	$ -	$ 409.36	4%	$ 9,415.28
37	ABANDONMENT OF EXISTING WATER LINES WITH FLOWABLE	760.0	$ 7.75	$ 5,890.00	-	$ -	$ -	$ -		$ 5,890.00
38	REMOVE AND RESET EXISTING STORM SEWER CULVERTS (ALL	1.0	$ 4,678.36	$ 4,678.36	-	$ -	$ -	$ -		$ 4,678.36
	MISCELLANEOUS CONSTRUCTION ITEMS									
39	SELECT FILL MATERIAL (CLASS 9, GROUP C), LVM FOR GRAVEL	35.0	$ 21.05	$ 736.75	242	$ 5,094.10	$ -	$ 5,094.10	691%	$ (4,357.35)
40	ASPHALT PAVEMENT REPAIR (ALL DEPTHS)	460.0	$ 181.29	$ 83,393.40	15	$ 2,670.40	$ -	$ 2,670.40	3%	$ 80,723.00
41	CONCRETE PAVEMENT REPAIR (ALL DEPTHS)	338.0	$ 116.96	$ 39,532.48	73	$ 8,566.15	$ -	$ 8,566.15	22%	$ 30,966.33
42	CONCRETE CURB AND GUTTER REPAIR (MATCH EXISTING IN KI	25.0	$ 58.48	$ 1,462.00	-	$ -	$ -	$ -		$ 1,462.00
	TOTALS			$ 2,022,777.26		$ 1,500,624.51	$165,461.71	$ 1,666,086.22		$ 356,691.04

EJCDC No. C-620 (2002 Edition)

Prepared by the Engineers' Joint Contract Documents Committee and endorsed by the Associated General Contractors of America and the Construction Specifications Institute.

Progress Estimate

Contractor's Application

For (contract):	Comprehensive Water Improvements Phase II				Application Number:	6				
Application Period:	5/26/2018 TO 6/25/2018				Application Date:	5-Jul-18				
	A			B	C	D	E	F		G
Pay Item	Item Description	Bid Quantity	Unit Price	Bid Value	Estimated Quantity Installed	Value	Materials Stored (not in C)	Total Completed and Stored to Date (D + E)	% (F)	Balance to Finish (B - F)
	Subtotal from Previous Page			$ 2,022,777.26		$ 1,500,624.51	$165,461.71	$ 1,666,086.22		$ 356,691.04
43	CRUSHED AGGREGATE FOR ROAD REPAIR (SIZE 825)	151.0	$ 58.48	$ 8,830.48	239	$ 13,990.17	$ -	$ 13,990.17	158%	$ (5,159.69)
44	TEMPORARY EROSION CONTROL	1.0	$ 6,432.75	$ 6,432.75	-	$ -	$ -	$ -		$ 6,432.75
45	GRASSING	1.0	$ 4,678.36	$ 4,678.36	-	$ -	$ -	$ -		$ 4,678.36
46	MAINTENANCE OF TRAFFIC	1.0	$ 5,847.95	$ 5,847.95	1	$ 4,385.96	$ -	$ 4,385.96	75%	$ 1,461.99
47	MOBILIZATION	1.0	$ 5,847.95	$ 5,847.95	1	$ 5,847.95	$ -	$ 5,847.95	100%	$ -
			$ -	$ -	-	$ -	$ -	$ -	#DIV/0!	$ -
			$ -	$ -	-	$ -	$ -	$ -	#DIV/0!	$ -
			$ -	$ -	-	$ -	$ -	$ -	#DIV/0!	$ -
			$ -	$ -	-	$ -	$ -	$ -	#DIV/0!	$ -
			$ -	$ -	-	$ -	$ -	$ -	#DIV/0!	$ -
			$ -	$ -	-	$ -	$ -	$ -	#DIV/0!	$ -
			$ -	$ -	-	$ -	$ -	$ -	#DIV/0!	$ -
			$ -	$ -	-	$ -	$ -	$ -	#DIV/0!	$ -
			$ -	$ -	-	$ -	$ -	$ -	#DIV/0!	$ -
			$ -	$ -	-	$ -	$ -	$ -	#DIV/0!	$ -
			$ -	$ -	-	$ -	$ -	$ -	#DIV/0!	$ -
			$ -	$ -	-	$ -	$ -	$ -	#DIV/0!	$ -
			$ -	$ -	-	$ -	$ -	$ -	#DIV/0!	$ -
			$ -	$ -	-	$ -	$ -	$ -	#DIV/0!	$ -
			$ -	$ -	-	$ -	$ -	$ -	#DIV/0!	$ -
			$ -	$ -	-	$ -	$ -	$ -	#DIV/0!	$ -
			$ -	$ -	-	$ -	$ -	$ -	#DIV/0!	$ -
			$ -	$ -	-	$ -	$ -	$ -	#DIV/0!	$ -
	TOTALS			$ 2,054,414.75		$ 1,524,848.60	$165,461.71	$ 1,690,310.31		$ 364,104.45

EJCDC No. C-620 (2002 Edition)

Prepared by the Engineers' Joint Contract Documents Committee and endorsed by the Associated General Contractors of America and the Construction Specifications Institute.

Monthly Totals

	DESCRIPTION	1 Estimated Quantity Installed	2 Estimated Quantity Installed	3 Estimated Quantity Installed	4 Estimated Quantity Installed	5 Estimated Quantity Installed	6 Estimated Quantity Installed	7 Estimated Quantity Installed	8 Estimated Quantity Installed	9 Estimated Quantity Installed	10 Estimated Quantity Installed	TOTAL Estimated Quantity Installed
	WATER PIPE ITEMS											
1	4" CLASS 350 DUCTILE IRON WATER PIPE (OPEN CUT)	4	2		40	4	54					104
2	6" CLASS 350 DUCTILE IRON WATER PIPE (OPEN CUT)	6	20		6	12	8					52
3	8" CLASS 350 DUCTILE IRON WATER PIPE (OPEN CUT)	60	1260			320	60					1700
4	12" CLASS 350 DUCTILE IRON WATER PIPE (OPEN CUT)	4560	5380	2980	5646	4479	1687					24732
5	12" CLASS 350 DUCTILE IRON WATER PIPE (BORED-NO CASING)	20		140	380	20	467					1027
6	16" 200 PSI, DR9, HDPE (OPEN CUT)(INCL ADAPTER FITTINGS)		80	-80								
7	16" 200 PSI, DR9, HDPE (DIRECTION BORE)(INCL ADAPTER FITTINGS)			177	360		620					1157
	CASING ITEMS											
8	18" STEEL CASING, 0.25" WT (OPEN CUT)		40									40
9	14" STEEL CASING, 0.25" WT (BORED)											
10	18" STEEL CASING, 0.25" WT (BORED)			80	245		265					590
11	20" STEEL CASING, 0.375"WT (BORED-RAILROAD)											
	CONNECTION ITEMS											
12	CONNECTION: PROPOSED 12" TO EXISTING 12" (STRAIGHT CONNECTION w/ FITTIN				1	1						2
13	CONNECTION: PROPOSED 12" TO EXISTING 12" (HOT TAP w/ VALVE ASSEMBLY & O				1							1
14	CONNECTION: PROPOSED 12" TO PROPOSED 12" (TEE & OTHER FITTINGS)				2		1					3
15	CONNECTION: PROPOSED 12" TO PROPOSED 12" & 8" (TEE & OTHER FITTINGS)					1						1
16	CONNECTION: PROPOSED 12" TO PROPOSED 8" (TEE & OTHER FITTINGS)											
17	CONNECTION: PROPOSED 12" TO PROPOSED 12" & EXISTING 8" & 6" (TEES & OTHE					1						1
18	CONNECTION: PROPOSED 12" TO PROPOSED 12" & EXISTING 4" (TEE & OTHER FITT			1		2						3
19	CONNECTION: PROPOSED 12" TO EXISTING 6" (TEE & OTHER FITTINGS)		1									1
20	CONNECTION: PROPOSED 12" TO EXISTING 6" & 4" (TEES & OTHER FITTINGS)											
21	CONNECTION: PROPOSED 12" TO EXISTING 6" & 4" (CROSS & OTHER FITTINGS)			1								1
22	CONNECTION: PROPOSED 12" TO EXISTING 4" (TEE & OTHER FITTINGS)	3	1				1					5

Monthly Totals

	DESCRIPTION	1 Estimated Quantity Installed	2 Estimated Quantity Installed	3 Estimated Quantity Installed	4 Estimated Quantity Installed	5 Estimated Quantity Installed	6 Estimated Quantity Installed	7 Estimated Quantity Installed	8 Estimated Quantity Installed	9 Estimated Quantity Installed	10 Estimated Quantity Installed	TOTAL Estimated Quantity Installed
23	CONNECTION: PROPOSED 8" TO EXISTING 12" (HOT TAP w/ VALVE ASSEMBLY & OT	1										1
24	CONNECTION: PROPOSED 8" TO EXISTING 6" (TEE & OTHER FITTINGS)				1							1
25	CONNECTION: PROPOSED 8" TO EXISTING 6" & 4" (TEES & OTHER FITTINGS)		2									2
	VALVE ITEMS											
26	4" GATE VALVE	3	4	2		1	2					12
27	6" GATE VALVE		1	1	5	7						14
28	8" GATE VALVE		6		1	2						9
29	12" GATE VALVE	4	6	4	12	17	5					48
	FIRE PROTECTION ITEMS											
30	3 WAY FIRE HYDRANT w/ APPURTENANCES (INCL. TEE, VALVE, HYDRANT, BRASS TA	5	5	4	7	9	5					35
31	6" FIRE SUPPRESSION SYSTEM CONNECTION (INCL. TEE, VALVE, PIPE, DISCONNECTI											
	SERVICE ITEMS											
32	RESIDENTIAL SERVICE TAP (ALL SIZES) (INCL. OPEN CUT SERVICE TUBING, TAPPING S		3		2	23	75					103
33	COMMERCIAL SERVICE TAP (ALL SIZES) (INCL. OPEN CUT SERVICE TUBING, TAPPING		3		1		4					8
34	SERVICE TUBING (BORED) (ALL SIZES)					743	2011					2754
35	RESIDENTIAL METER (INCL. METER, METER BOX, CITY FEES, ETC.)											
	REMOVAL ITEMS											
36	REMOVAL OF FIRE HYDRANT AND APPURTENANCES						1					1
37	ABANDONMENT OF EXISTING WATER LINES WITH FLOWABLE FILL											
38	REMOVE AND RESET EXISTING STORM SEWER CULVERTS (ALL SIZES)											
	MISCELLANEOUS CONSTRUCTION ITEMS											
39	SELECT FILL MATERIAL (CLASS 9, GROUP C), LVM FOR GRAVEL DRIVEWAY REPAIR	32	14		154	42						242
40	ASPHALT PAVEMENT REPAIR (ALL DEPTHS)			9.14	5.59							14.73
41	CONCRETE PAVEMENT REPAIR (ALL DEPTHS)			24.46	48.78							73.24
42	CONCRETE CURB AND GUTTER REPAIR (MATCH EXISTING IN KIND)											

Monthly Totals

	DESCRIPTION	1 Estimated Quantity Installed	2 Estimated Quantity Installed	3 Estimated Quantity Installed	4 Estimated Quantity Installed	5 Estimated Quantity Installed	6 Estimated Quantity Installed	7 Estimated Quantity Installed	8 Estimated Quantity Installed	9 Estimated Quantity Installed	10 Estimated Quantity Installed	TOTAL Estimated Quantity Installed
43	CRUSHED AGGREGATE FOR ROAD REPAIR (SIZE 825)	24.26	7.72	15.67	123.91	67.67						239.23
44	TEMPORARY EROSION CONTROL											
45	GRASSING											
46	MAINTENANCE OF TRAFFIC		0.5				0.25					0.75
47	MOBILIZATION		0.5			0.5						1

Stored Material Summary

6 's Application

For (contract):	Comprehensive Water Improvements Phase II	5/26/2018	6/25/2018	7/5/2018	6
Application Period:	5/26/2018 TO 6/25/2018			Application Date:	5-Jul-18

A	B	C	D		E		F		G
			Stored Previously		Stored this Month		Incorporated in Work		
Pay Item No.	Unit Price	Materials Description	Quantity	Amount ($)	Quantity	Amount ($)	Quantity	Amount ($)	Materials Remaining in Storage ($) (D + E - F)
		WATER PIPE ITEMS	-	$ -		$ -		$ -	$ -
1	$ 15.66	4" CLASS 350 DUCTILE IRON WATER PIPE (OPEN CUT)	260	$ 4,071.60		$ -	104	$ 1,628.64	$ 2,442.96
2	$ 10.33	6" CLASS 350 DUCTILE IRON WATER PIPE (OPEN CUT)	280	$ 2,892.40		$ -	52	$ 537.16	$ 2,355.24
3	$ 13.00	8" CLASS 350 DUCTILE IRON WATER PIPE (OPEN CUT)	590	$ 7,670.00		$ -	1,700	$ 22,100.00	$ -
4	$ 22.07	12" CLASS 350 DUCTILE IRON WATER PIPE (OPEN CUT)	27,000	$ 595,890.00		$ -	24,732	$ 545,835.24	$ 50,054.76
5	$ 21.27	12" CLASS 350 DUCTILE IRON WATER PIPE (BORED-NO CASING)	390	$ 8,295.30		$ -	1,027	$ 21,844.29	$ -
6	$ 58.29	16" 200 PSI, DR9, HDPE (OPEN CUT)(INCL ADAPTER FITTINGS)	-	$ -	780	$ 45,466.20		$ -	$ 45,466.20
7	$ 58.29	16" 200 PSI, DR9, HDPE (DIRECTION BORE)(INCL ADAPTER FITTINGS)	-	$ -	460	$ 26,813.40	1,157	$ 67,441.53	$ -
		CASING ITEMS	-	$ -		$ -		$ -	$ -
8	$ 27.44	18" STEEL CASING, 0.25" WT (OPEN CUT)	-	$ -	20	$ 548.80	40	$ 1,097.60	$ -
9	$ 23.89	14" STEEL CASING, 0.25" WT (BORED)	-	$ -	40	$ 955.60		$ -	$ 955.60
10	$ 36.66	18" STEEL CASING, 0.25" WT (BORED)	-	$ -	610	$ 22,362.60	590	$ 21,629.40	$ 733.20
11		20" STEEL CASING, 0.375"WT (BORED-RAILROAD)	-	$ -		$ -		$ -	$ -
		CONNECTION ITEMS	-	$ -		$ -		$ -	$ -
12	$ 258.72	CONNECTION: PROPOSED 12" TO EXISTING 12" (STRAIGHT CONNECTION w/ FITTINGS)	-	$ -	2	$ 517.44	2	$ 517.44	$ -
13	$ 2,893.20	CONNECTION: PROPOSED 12" TO EXISTING 12" (HOT TAP w/ VALVE ASSEMBLY & OTHER FITTIN	-	$ -	3	$ 8,679.60	1	$ 2,893.20	$ 5,786.40
14	$ 813.82	CONNECTION: PROPOSED 12" TO PROPOSED 12" (TEE & OTHER FITTINGS)	-	$ -	5	$ 4,069.10	3	$ 2,441.46	$ 1,627.64
15	$ 684.46	CONNECTION: PROPOSED 12" TO PROPOSED 12" & 8" (TEE & OTHER FITTINGS)	-	$ -	1	$ 684.46	1	$ 684.46	$ -
16	$ 684.46	CONNECTION: PROPOSED 12" TO PROPOSED 8" (TEE & OTHER FITTINGS)	-	$ -	1	$ 684.46		$ -	$ 684.46
17	$ 684.46	CONNECTION: PROPOSED 12" TO PROPOSED 12" & EXISTING 8" & 6" (TEES & OTHER FITTINGS)	-	$ -	1	$ 684.46	1	$ 684.46	$ -
18	$ 684.46	CONNECTION: PROPOSED 12" TO PROPOSED 12" & EXISTING 4" (TEE & OTHER FITTINGS)	-	$ -		$ -	3	$ 2,053.38	$ -
19	$ 258.72	CONNECTION: PROPOSED 12" TO EXISTING 6" (TEE & OTHER FITTINGS)	-	$ -	10	$ 2,587.20	1	$ 258.72	$ 2,328.48
20	$ 258.72	CONNECTION: PROPOSED 12" TO EXISTING 6" & 4" (TEES & OTHER FITTINGS)	-	$ -	1	$ 258.72		$ -	$ 258.72
21		CONNECTION: PROPOSED 12" TO EXISTING 6" & 4" (CROSS & OTHER FITTINGS)	-	$ -		$ -	1	$ -	$ -
22	$ 258.72	CONNECTION: PROPOSED 12" TO EXISTING 4" (TEE & OTHER FITTINGS)	-	$ -	12	$ 3,104.64	5	$ 1,293.60	$ 1,811.04
		TOTALS		$ 618,819.30		$ 117,416.68		$ 692,940.58	$114,504.70
		6/5/2018							

EJCDC No. C-620 (2002 Edition)

Prepared by the Engineers' Joint Contract Documents Committee and endorsed by the Associated General Contractors of America and the Construction Specifications Institute.

Stored Material Summary

Contractor's Application

For (contract):	Comprehensive Water Improvements Phase II			Application Number:	6				
Application Period:	5/26/2018 TO 6/25/2018			Application Date:	5-Jul-18				
A	B	C	D		E		F		G
			Stored Previously		Stored this Month		Incorporated in Work		
Pay Item No.	Unit Price	Materials Description	Quantity	Amount ($)	Quantity	Amount ($)	Quantity	Amount ($)	Materials Remaining in Storage ($) (D + E - F)
		Subtotal From Previous Page		618819.3		117416.68		692940.58	114504.7
23		CONNECTION: PROPOSED 8" TO EXISTING 12" (HOT TAP w/ VALVE ASSEMBLY & OTHER FITTING	-	$ -		$ -	1	$ -	$ -
24		CONNECTION: PROPOSED 8" TO EXISTING 6" (TEE & OTHER FITTINGS)	-	$ -		$ -	1	$ -	$ -
25		CONNECTION: PROPOSED 8" TO EXISTING 6" & 4" (TEES & OTHER FITTINGS)	-	$ -		$ -	2	$ -	$ -
		VALVE ITEMS	-	$ -		$ -		$ -	$ -
26	$ 499.88	4" GATE VALVE	-	$ -	9	$ 4,498.92	12	$ 5,998.56	$ -
27	$ 602.61	6" GATE VALVE	-	$ -	14	$ 8,436.54	14	$ 8,436.54	$ -
28	$ 135.08	8" GATE VALVE	-	$ -	4	$ 540.32	9	$ 1,215.72	$ -
29	$ 1,530.39	12" GATE VALVE	-	$ -	66	$ 101,005.74	48	$ 73,458.72	$ 27,547.02
		FIRE PROTECTION ITEMS	-	$ -		$ -		$ -	$ -
30	$ 2,645.01	3 WAY FIRE HYDRANT w/ APPURTENANCES (INCL. TEE, VALVE, HYDRANT, BRASS TAG, PIPE, & O	-	$ -	42	$ 111,090.42	35	$ 92,575.35	$ 18,515.07
31		6" FIRE SUPPRESSION SYSTEM CONNECTION (INCL. TEE, VALVE, PIPE, DISCONNECTION OF EXIST	-	$ -		$ -		$ -	$ -
		SERVICE ITEMS	-	$ -		$ -		$ -	$ -
32	$ 140.88	RESIDENTIAL SERVICE TAP (ALL SIZES) (INCL. OPEN CUT SERVICE TUBING, TAPPING SADDLE, COR	-	$ -	99	$ 13,947.12	103	$ 14,510.64	$ -
33	$ 543.88	COMMERCIAL SERVICE TAP (ALL SIZES) (INCL. OPEN CUT SERVICE TUBING, TAPPING SADDLE, CO	-	$ -	17	$ 9,245.96	8	$ 4,351.04	$ 4,894.92
34		SERVICE TUBING (BORED) (ALL SIZES)	-	$ -		$ -	2,754	$ -	$ -
35		RESIDENTIAL METER (INCL. METER, METER BOX, CITY FEES, ETC.)	-	$ -		$ -		$ -	$ -
		REMOVAL ITEMS	-	$ -		$ -		$ -	$ -
36		REMOVAL OF FIRE HYDRANT AND APPURTENANCES	-	$ -		$ -	1	$ -	$ -
37		ABANDONMENT OF EXISTING WATER LINES WITH FLOWABLE FILL	-	$ -		$ -		$ -	$ -
38		REMOVE AND RESET EXISTING STORM SEWER CULVERTS (ALL SIZES)	-	$ -		$ -		$ -	$ -
		MISCELLANEOUS CONSTRUCTION ITEMS	-	$ -		$ -		$ -	$ -
39		SELECT FILL MATERIAL (CLASS 9, GROUP C), LVM FOR GRAVEL DRIVEWAY REPAIR	-	$ -		$ -	242	$ -	$ -
40		ASPHALT PAVEMENT REPAIR (ALL DEPTHS)	-	$ -		$ -	15	$ -	$ -
41		CONCRETE PAVEMENT REPAIR (ALL DEPTHS)	-	$ -		$ -	73	$ -	$ -
42		CONCRETE CURB AND GUTTER REPAIR (MATCH EXISTING IN KIND)	-	$ -		$ -		$ -	$ -
		TOTALS		$ 618,819.30		$ 366,181.70		$ 893,487.15	$ 165,461.71

EJCDC No. C-620 (2002 Edition)

Prepared by the Engineers' Joint Contract Documents Committee and endorsed by the Associated General Contractors of America and the Construction Specifications Institute.

Stored Material Summary

Contractor's Application

For (contract):	Comprehensive Water Improvements Phase II			Application Number:	6				
Application Period:	5/26/2018 TO 6/25/2018			Application Date:	5-Jul-18				
A	B	C	D		E		F		G
			Stored Previously		Stored this Month		Incorporated in Work		
Pay Item No.	Unit Price	Materials Description	Quantity	Amount ($)	Quantity	Amount ($)	Quantity	Amount ($)	Materials Remaining in Storage ($) (D + E - F)
		Subtotal From Previous Page		618819.3		366181.7		893487.15	165461.71
43		CRUSHED AGGREGATE FOR ROAD REPAIR (SIZE 825)	-	$ -		$ -	239	$ -	$ -
44		TEMPORARY EROSION CONTROL	-	$ -		$ -		$ -	$ -
45		GRASSING	-	$ -		$ -		$ -	$ -
46		MAINTENANCE OF TRAFFIC	-	$ -		$ -	1	$ -	$ -
47		MOBILIZATION	-	$ -		$ -	1	$ -	$ -
			-	$ -		$ -		$ -	$ -
			-	$ -		$ -		$ -	$ -
			-	$ -		$ -		$ -	$ -
			-	$ -		$ -		$ -	$ -
			-	$ -		$ -		$ -	$ -
			-	$ -		$ -		$ -	$ -
			-	$ -		$ -		$ -	$ -
			-	$ -		$ -		$ -	$ -
			-	$ -		$ -		$ -	$ -
			-	$ -		$ -		$ -	$ -
			-	$ -		$ -		$ -	$ -
			-	$ -		$ -		$ -	$ -
			-	$ -		$ -		$ -	$ -
			-	$ -		$ -		$ -	$ -
			-	$ -		$ -		$ -	$ -
			-	$ -		$ -		$ -	$ -
			-	$ -		$ -		$ -	$ -
			-	$ -		$ -		$ -	$ -
			-	$ -		$ -		$ -	$ -
			-	$ -		$ -		$ -	$ -
			-	$ -		$ -		$ -	$ -
			-	$ -		$ -		$ -	$ -
			-	$ -		$ -		$ -	$ -
			-	$ -		$ -		$ -	$ -
		TOTALS		$ 618,819.30		$ 366,181.70		$ 893,487.15	$ 165,461.71

EJCDC No. C-620 (2002 Edition)

Prepared by the Engineers' Joint Contract Documents Committee and endorsed by the Associated General Contractors of America and the Construction Specifications Institute.

Hattiesburg, Mississippi does hereby certify to Regions Bank, as trustee in respect to the referenced Bonds (the Trustee”):

(1) The amounts herein requisitioned to be paid to the above-designated payees are for the items or services hereinabove described.
(2) The items or services listed above for which payment is proposed to be made hereunder have not formed the basis for any payment heretofore made from the Series 2016 Project Fund Construction Account.
(3) Each of the items was reasonable and necessary in connection with the “Construction Project” being financed pursuant to the Loan Agreement dated as of August 18, 2016 (the “Loan Agreement”).
(4) The payment herein authorized and approved is a proper charge against the Series 2016 Project Fund Construction Account as provided for in Section 3 of the Loan Agreement.
(5) The invoices or statements from the contractor, vendor or other payee or other document supporting the amounts requisitioned herein are on file with the City.

CITY OF HATTIESBURG, MISSISSIPPI

By: _____
Title: Mayor or City Clerk
(Authorized City Representative)

As Approved by:

Regions Commercial Equipment Finance, LLC
As Purchaser

_____
Authorized Officer

There came on for consideration at a duly constituted meeting of the Mayor and Members of the City Council of the City of Hattiesburg, Mississippi, held on the **7th** day of **August, 2018**, the following Resolution:

RESOLTUION 2018-103

The City Council of the City of Hattiesburg, Mississippi (the "City") acting for and on behalf of the City, took up for consideration the matter of requesting and authorizing Requisition No. **24** from the Project Fund Construction Account in connection with the loan agreement between the Mississippi Development Bank and the City dated August 18, 2016. After discussion of the subject, Council Member George offered and moved for the adoption of the following resolution:

RESOLUTION OF THE CITY COUNCIL OF THE CITY OF HATTIESBURG, MISSISSIPPI (THE "CITY") AUTHORIZING REQUISITION NO. 24 FROM THE PROJECT FUND CONSTRUCTION ACCOUNT IN CONNECTION WITH THAT CERTAIN LOAN AGREEMENT, DATED AS OF AUGUST 18, 2016, BY AND BETWEEN THE MISSISSIPPI DEVELOPMENT BANK AND THE CITY.

Whereas, on August 18, 2016 the City entered into a loan with the Mississippi Development Bank in an amount not to exceed $25,000,000 (the "Loan") pursuant to the terms and conditions of that certain loan agreement, dated as of August 18, 2016, by and between the Mississippi Development Bank and the City (the "Loan Agreement").

Whereas, the City Council of the City now finds it necessary to approve Requisition No. **24** from the Project Fund Construction Account under the Loan in the total aggregate amount of **$382,482.30** for the purpose of paying Water & Sewer Projects in connection with the loan as more particularly described in Exhibit A.

NOW, THEREFORE, BE IT RESOLVED BY THE CITY COUNCIL OF THE CITY OF HATTIESBURG, MISSISSIPPI:

SECTION 1. The City Council of the City hereby authorizes and approves Requisition No. **24** from the Project Fund Construction Account under the Loan in the total aggregate amount of **Three hundred Eighty-Two Thousand Four Hundred Eighty-two and 30/100 dollars ($382,482.30)** for the purpose of paying Water & Sewer Projects in connection with the loan as more particularly described in Exhibit A.

SECTION 2. The City Council hereby directs Regions Bank, as Trustee to disburse funds of Requisition No.**24** in the total aggregate amount of **Three hundred Eighty-Two Thousand Four Hundred Eighty-two and 30/100 dollars ($382,482.30)** as authorized herein, as more particularly described in Exhibit A.

SECTION 3. The Mayor and City Clerk are hereby authorized and directed for and on behalf of the City to take any and all action as may be required by the City to carry out and give effect to the aforesaid documents authorized pursuant to this Resolution and to execute all papers, documents, certificates and other instruments that may be required for the carrying out of the authority conferred by this Resolution in order to evidence the authority.

The above and foregoing Resolution, after having been first reduced to writing, was introduced by Council Member George, seconded by Council Vice President Dryden, and was adopted by the following vote, to wit:

YEAS:	**NAYS:**	**ABSENT:**
George	**None**	**None**
Delgado		
Carroll		
Dryden		
Brown		

The motion having received the affirmative vote of a majority of the Council members present, the President declared the motion carried and the resolution adopted, on this the **7th day** of **August**, 2018.

(SEAL)

ATTEST:

CLERK OF COUNCIL

ADOPTED:

PRESIDENT OF COUNCIL

The above and foregoing Resolution having been submitted to and approved by the Mayor, this the **7th day** of **August**, 2018.

ATTEST:

CITY CLERK

APPROVED:

MAYOR

EXHIBIT A

PROJECT FUND CONSTRUCTION ACCOUNT REQUISITION

sdw
Engineering Progress

CITY OF HATTIESBURG
P. O. BOX 1898
HATTIESBURG, MS 39403-1898

July 25, 2018
Project No: 11256
Invoice No: 20357

Project Manager Kyle Wallace

Project 11256 CIPP Sewer in Various Locations

Professional Services from June 24, 2018 to July 21, 2018

Phase DD Design Phase Services

Professional Personnel

	Hours	Rate	Amount	
PROJECT ENGINEER				
Wallace, Kyle	1.00	175.00	175.00	
Weeks, John	16.00	175.00	2,800.00	
Totals	17.00		2,975.00	
Total Labor				**2,975.00**
		Total this Phase		**$2,975.00**
		Total this Invoice		**$2,975.00**

Please make checks payable to Shows, Dearman and Waits, Inc. Thank you.

093695.7220.75
MB 2011-4/89-110

301 Second Ave. | Hattiesburg, MS 39401 | (p) 601.544.1821 | sd-w.com

sdw
Engineering Progress

CITY OF HATTIESBURG
P. O. BOX 1898
HATTIESBURG, MS 39403-1898

July 25, 2018
Project No: 1273-S005
Invoice No: 20359

Project Manager Kyle Wallace

Project 1273-S005 ComSWIP Sewer Phase V

Professional Services from June 24, 2018 to July 21, 2018

Phase CM Phase V - Construction Phase Services

Professional Personnel

	Hours	Rate	Amount	
CONSTRUCTION OBSERVER				
Jackson, Terry	41.00	85.00	3,485.00	
Tingle, William	20.50	95.00	1,947.50	
CONSTRUCTION OBSERVER				
Riley, Ivy	6.50	105.00	682.50	
PROJECT ENGINEER				
Sellers, Bennie	12.00	150.00	1,800.00	
Wallace, Kyle	.50	175.00	87.50	
Totals	80.50		8,002.50	
Total Labor				**8,002.50**
		Total this Phase		**$8,002.50**
		Total this Invoice		**$8,002.50**

Please make checks payable to Shows, Dearman and Waits, Inc. Thank you.

093695. 7220.54
MB 2012-1/413

301 Second Ave. | Hattiesburg, MS 39401 | (p) 601.544.1821 | sd-w.com

sdw
Engineering Progress

CITY OF HATTIESBURG
P. O. BOX 1898
HATTIESBURG, MS 39403-1898

July 25, 2018
Project No: 1273-S011
Invoice No: 20348

Project Manager John Weeks

Project 1273-S011 ComSWIP Sewer Phase X - Quinn St. Area

Professional Services from June 24, 2018 to July 21, 2018

Phase CM Construction Management

Construction Cost	2,992,750.30
Fee Percentage	9.00
Total Fee	269,347.53

Billing Phase	Percent of Fee	Fee	Percent Complete	Earned	Previous Fee Billing	Current Fee Billing
Design Phase Services	100.00	269,347.53	100.00	269,347.53	269,347.53	0.00
		Totals		269,347.53	269,347.53	0.00
		Total Fee				**0.00**

Professional Personnel

	Hours	Rate	Amount	
CADD TECHNICIAN I				
Sullivan, Richard	1.50	105.00	157.50	
SR. RESIDENT PROJECT REPRESENTATIVE				
Phillips, Michael	78.50	85.00	6,672.50	
PROJECT ENGINEER				
Weeks, John	10.50	175.00	1,837.50	
Totals	90.50		8,667.50	
Total Labor				**8,667.50**

Consultants

Speedy Printing & Signs		70.62	
Total Consultants	**1.0 times**	**70.62**	**70.62**

Total this Phase **$8,738.12**

Total this Invoice **$8,738.12**

Please make checks payable to Shows, Dearman and Waits, Inc. Thank you.

093695.7220.72
MB 2011-4/89-110

301 Second Ave. | Hattiesburg, MS 39401 | (p) 601.544.1821 | sd-w.com

sdw
Engineering Progress

CITY OF HATTIESBURG
P. O. BOX 1898
HATTIESBURG, MS 39403-1898

July 25, 2018
Project No: 1273-W007
Invoice No: 20361

Project Manager Kyle Wallace

Project 1273-W007 ComSWIP Water Phase II - Palmers Crossing

Professional Services from June 24, 2018 to July 21, 2018

Phase CM Palmer's Crossing - Construction Phase

Professional Personnel

	Hours	Rate	Amount	
AUTO CAD TECHNICIAN				
Sullivan, Richard	2.50	85.00	212.50	
CONSTRUCTION OBSERVER				
Jackson, Terry	53.00	85.00	4,505.00	
Tingle, William	40.00	85.00	3,400.00	
CONSTRUCTION OBSERVER				
Riley, Ivy	5.00	100.00	500.00	
PROJECT ENGINEER				
McNease, Shea	19.00	150.00	2,850.00	
Sellers, Bennie	13.50	150.00	2,025.00	
Totals	133.00		13,492.50	
Total Labor				**13,492.50**
		Total this Phase		**$13,492.50**
		Total this Invoice		**$13,492.50**

Please make checks payable to Shows, Dearman and Waits, Inc. Thank you.

093695. 7245.51
MB 2011-4/89-110

301 Second Ave. | Hattiesburg, MS 39401 | (p) 601.544.1821 | sd-w.com

sdw
Engineering Progress

CITY OF HATTIESBURG
P. O. BOX 1898
HATTIESBURG, MS 39403-1898

July 25, 2018
Project No: 1273-S010
Invoice No: 20347

Project Manager John Weeks

Project 1273-S010 ComSWIP Sewer Phase VIII - Camp St. Area

Professional Services from June 24, 2018 to July 21, 2018

Phase CM Construction Phase Services

Professional Personnel

	Hours	Rate	Amount	
CADD TECHNICIAN I				
Sullivan, Richard	8.50	105.00	892.50	
SR. RESIDENT PROJECT REPRESENTATIVE				
Tingle, William	13.50	95.00	1,282.50	
PROJECT ENGINEER				
Weeks, John	18.50	150.00	2,775.00	
Totals	40.50		4,950.00	
Total Labor				**4,950.00**
		Total this Phase		**$4,950.00**
		Total this Invoice		**$4,950.00**

Please make checks payable to Shows, Dearman and Waits, Inc. Thank you.

093695.7220.70
MTB 2011-4/89-110

301 Second Ave. | Hattiesburg, MS 39401 | (p) 601.544.1821 | sd-w.com

sdw Engineering Progress

CITY OF HATTIESBURG
P. O. BOX 1898
HATTIESBURG, MS 39403-1898

July 25, 2018
Project No: 1273-W015
Invoice No: 20349

Project Manager John Weeks

Project 1273-W015 Water Plant #1 Rehabilitation

Professional Services from June 24, 2018 to July 21, 2018

Phase DD Design Phase Services

Professional Personnel

	Hours	Rate	Amount	
CADD TECHNICIAN I				
Sullivan, Richard	1.00	105.00	105.00	
CAD TECHNICIAN II				
Trahan, Beau	80.50	90.00	7,245.00	
FIELD CREW				
Crew, Field	4.00	175.00	700.00	
PROJECT ENGINEER				
Connolly, Nicholas	5.00	175.00	875.00	
Weeks, John	17.00	175.00	2,975.00	
Totals	107.50		11,900.00	
Total Labor				**11,900.00**
		Total this Phase		**$11,900.00**
		Total this Invoice		**$11,900.00**

Please make checks payable to Shows, Dearman and Waits, Inc. Thank you.

093695.7295.70

MB 2017-81

301 Second Ave. | Hattiesburg, MS 39401 | (p) 601.544.1821 | sd-w.com

sdw
Engineering Progress

CITY OF HATTIESBURG
P. O. BOX 1898
HATTIESBURG, MS 39403-1898

July 25, 2018
Project No: 1273-S012
Invoice No: 20360

Project Manager Kyle Wallace

Project 1273-S012 COMSWIP Sewer Improv. Phase XII

Professional Services from June 24, 2018 to July 21, 2018

Professional Personnel

	Hours	Rate	Amount	
PROJECT ENGINEER				
Connolly, Nicholas	3.00	175.00	525.00	
Totals	3.00		525.00	
Total Labor				**525.00**
		Total this Invoice		**$525.00**

Please make checks payable to Shows, Dearman and Waits, Inc. Thank you.

093695. 7220.74
MB 2011-4/89-110

301 Second Ave. | Hattiesburg, MS 39401 | (p) 601.544.1821 | sd-w.com

sdw Engineering Progress

CITY OF HATTIESBURG
P. O. BOX 1898
HATTIESBURG, MS 39403-1898

July 25, 2018
Project No: 1273-W013.001
Invoice No: 20362

Project Manager Kyle Wallace

Project 1273-W013.001 COMSWIP Water Phase V - I59 Crossing - Construction Phase

Professional Services from June 24, 2018 to July 21, 2018

Phase CM Construction Management

Professional Personnel

	Hours	Rate	Amount	
RESIDENT PROJECT REPRESENTATIVE				
Riley, Ivy	1.50	105.00	157.50	
PROJECT ENGINEER				
Wallace, Kyle	1.50	175.00	262.50	
Totals	3.00		420.00	
Total Labor				**420.00**
		Total this Phase		**$420.00**
		Total this Invoice		**$420.00**

Please make checks payable to Shows, Dearman and Waits, Inc. Thank you.

093695. 7245.62
MB 2011-4/89-110

301 Second Ave. | Hattiesburg, MS 39401 | (p) 601.544.1821 | sd-w.com

sdw
Engineering Progress

CITY OF HATTIESBURG
P. O. BOX 1898
HATTIESBURG, MS 39403-1898

July 26, 2018
Project No: 1273-S014
Invoice No: 20371

Project Manager Shea McNease

Project 1273-S014 ComSWIP Sewer Phase IX Bushman & 2nd

Professional Services from June 24, 2018 to July 21, 2018

Phase DD Design Phase Services

Professional Personnel

	Hours	Rate	Amount	
PROJECT ENGINEER				
McNease, Shea	13.00	175.00	2,275.00	
Totals	13.00		2,275.00	
Total Labor				**2,275.00**
		Total this Phase		**$2,275.00**
		Total this Invoice		**$2,275.00**

Please make checks payable to Shows, Dearman and Waits, Inc. Thank you.

093695.7220.71

MB 2011-4/89-90

301 Second Ave. | Hattiesburg, MS 39401 | (p) 601.544.1821 | sd-w.com

sdw
Engineering Progress

July 25, 2018

City of Hattiesburg
Post Office Box 1898
Hattiesburg MS 39403-1898

Attn: Lamar Rutland, P.E.

RE: **Comprehensive Sewer Improvements Ph V -**
City of Hattiesburg

Dear Mr. Rutland:

Enclosed please find Pay Estimate No. 6 for the above referenced project in the amount of $160,435.16.

Should you have any questions and/or comments, please, do not hesitate to contact me.

Sincerely,

Kyle D. Wallace, P.E.
Project Engineer

/aa

cc: Terry Jackson, SDW

RECEIVED 7/30/18

301 Second Ave. | Hattiesburg, MS 39401 | (p) 601.544.1821 | (f) 601.544.0501 | sd-w.com

Contractor's Application For Payment No. 6

	Application Period: Beginning: 5/26/2018 Ending: 6/25/2018	Application Date: 5-Jul-18
To (Owner): CITY OF HATTIESBURG	From (Contractor): C.B. DEVELOPERS, INC.	Via (Engineer): SHOWS, DEARMAN & WAITS, INC.
Project: COMPRENHENSIVE SEWER PHASE 5	Contract:	
Owner's Contract No.:	Contractor's Project No.:	Engineer's Project No.:

Change Order Summary

Approved Change Orders		
Number	Additions	Deductions
TOTALS	$ -	$ -
NET CHANGE BY CHANGE ORDERS	$ -	

1. ORIGINAL CONTRACT PRICE	$	1,077,240.50
2. Net change by Change Orders	$	-
3. CURRENT CONTRACT PRICE (LINE 1 + 2)	$	1,077,240.50
4. TOTAL COMPLETED AND STORED TO DATE (Column F on Progress Estimates)	$	744,277.36
5. RETAINAGE:		
a. 5.0 % x Work Completed	$	37,213.87
b. 5.0% x Stored Material	$	-
c. Total Retainage (line 5a + line 5b)	$	37,213.87
6. AMOUNT ELIGIBLE TO DATE (Line 4 - Line 5c)	$	707,063.49
7. LESS PREVIOUS PAYMENTS (Line 6 from prior Application)	$	546,628.33
8. AMOUNT DUE THIS APPLICATION	$	***160,435.16***
9. BALANCE TO FINISH, PLUS RETAINAGE (Column G on Progress Estimate + Line 5 above)	$	370,177.01

CONTRACTOR'S CERTIFICATION

The undersigned Contractor certifies that: (1) all previous progress payments received from Owner on account of Work done under the Contract have been applied on account to discharge Contractor's legitimate obligations incurred in connection with Work covered by prior Applications for Payment; (2) title of all Work, materials and equipment incorporated in said Work or otherwise listed in or covered by this Application for Payment will pass to Owner at time of payment free and clear of all Liens, security interests and encumbrances (except such as are covered by a Bond acceptable to Owner indemnifying Owner against any such Liens, security interest or encumbrances); and (3) all Work covered by this Application for Payment is in accordance with the Contract Documents and is not defective.

By: Date: 7/24/2018

Payment of: **$160,435.16**
(Line 8 or other - attach explanation of other amount)

Is recommended by: (Engineer) 7-27-18 (Date)

Payment of: **$160,435.16**
(Line 8 or other - attach explanation of other amount)

Is approved by: (Owner) (Date)

Is approved by: (Owner) (Date)

Approved by: (Funding Agency, if applicable) (Date)

EJCDC No. C-620 (2002 Edition)

Prepared by the Engineers' Joint Contract Documents Committee and endorsed by the Associated General Contractors of America and the Construction Specifications Institute.

Progress Estimate

6 'actor's Application

For (contract):	COMPRENHENSIVE SEWER PHASE 5	5/26/2018	6/25/2018	Application Number:	43286
Application Period:	5/26/2018 TO 6/25/2018			Application Date:	5-Jul-18

	A			B	C	D	E	F		G
Pay Item	Item Description	Bid Quantity	Unit Price	Bid Value	Estimated Quantity Installed	Value	Materials Stored (not in C)	Total Completed and Stored to Date (D + E)	% (F)	Balance to Finish (B - F)
	SITE 1-DOGWOOD DRIVE									
1	**4" 160 PSI PVC SANITARY SEWER FORCE MAIN (ALL DEPTHS)**	**1000.0**	$ 7.84	$ 7,840.00	745	$ 5,840.80	$0.00	$ 5,840.80	75%	$ 1,999.20
2	**8" SDR 26 PVC SEWER PIPE (0-6')**	**1098.0**	$ 24.16	$ 26,527.68	966	$ 23,338.56	$0.00	$ 23,338.56	88%	$ 3,189.12
3	**8" SDR 26 PVC SEWER PIPE (6'-8')**	**601.0**	$ 26.56	$ 15,962.56	335	$ 8,897.60	$0.00	$ 8,897.60	56%	$ 7,064.96
4	**8" SDR 26 PVC SEWER PIPE (8'-10')**	**123.0**	$ 38.55	$ 4,741.65	146	$ 5,628.30	$0.00	$ 5,628.30	119%	$ (886.65)
5	**8" SDR 26 PVC SEWER PIPE (10'-12')**	**101.0**	$ 43.34	$ 4,377.34	48	$ 2,080.32	$0.00	$ 2,080.32	48%	$ 2,297.02
6	**8" SDR 26 PVC SEWER PIPE (12'-14')**	**135.0**	$ 48.14	$ 6,498.90	55	$ 2,647.70	$0.00	$ 2,647.70	41%	$ 3,851.20
7	**AIR RELEASE AND VACUUM VALVE ASSEMBLY (INCLUDING PR**	**1.0**	$ 4,189.24	$ 4,189.24	-	$ -	$0.00	$ -	0%	$ 4,189.24
	MANHOLE ITEMS									
8	**48" PRECAST CONCRETE SEWER MANHOLE (0-6')**	**3.0**	$ 2,689.82	$ 8,069.46	1	$ 2,689.82	$0.00	$ 2,689.82	33%	$ 5,379.64
9	**48" PRECAST CONCRETE SEWER MANHOLE (6'-8')**	**8.0**	$ 3,176.78	$ 25,414.24	5	$ 15,883.90	$0.00	$ 15,883.90	63%	$ 9,530.34
10	**48" PRECAST CONCRETE SEWER MANHOLE (8'-10')**	**1.0**	$ 3,658.87	$ 3,658.87	1	$ 3,658.87	$0.00	$ 3,658.87	100%	$ -
11	**48" PRECAST CONCRETE SEWER MANHOLE (10'-12')**	**1.0**	$ 4,190.30	$ 4,190.30	-	$ -	$0.00	$ -	0%	$ 4,190.30
12	**48" PRECAST CONCRETE SEWER MANHOLE (12'-14')**	**1.0**	$ 4,382.73	$ 4,382.73	1	$ 4,382.73	$0.00	$ 4,382.73	100%	$ -
	SEWER SERVICE ITEMS									
13	**6" SDR 26 PVC SEWER PIPE FOR SERVICES (ALL DEPTHS)**	**942.0**	$ 10.60	$ 9,985.20	513	$ 5,437.80	$0.00	$ 5,437.80	54%	$ 4,547.40
14	**8" X 8" X 6" PVC TEE**	**8.0**	$ 323.75	$ 2,590.00	6	$ 1,942.50	$0.00	$ 1,942.50	75%	$ 647.50
15	**6" PVC CLEANOUT**	**8.0**	$ 359.74	$ 2,877.92	7	$ 2,518.18	$0.00	$ 2,518.18	88%	$ 359.74
	LIFT STATION ITEMS									
16	**LIFT STATION INCL CLEARING AND GRUBBING, BORROW MAT**	**1.0**	$ 207,236.80	$ 207,236.80	1	$ 155,427.60	$0.00	$ 155,427.60	75%	$ 51,809.20
	MISCELLANEOUS CONSTRUCTION ITEMS									
17	**ABANDONMENT OF SEPTIC TANKS**	**7.0**	$ 359.68	$ 2,517.76	-	$ -	$0.00	$ -	0%	$ 2,517.76
18	**DROP MANHOLE ASSEMBLY (ALL DEPTHS)**	**3.0**	$ 869.23	$ 2,607.69	-	$ -	$0.00	$ -	0%	$ 2,607.69
19	**WATER SERVICE REPAIR (INCLUDING SERVICE TUBING, FITTIN**	**4.0**	$ 599.95	$ 2,399.80	-	$ -	$0.00	$ -	0%	$ 2,399.80
20	**CRUSHED AGGREGRATE (SIZE 825)**	**612.0**	$ 44.96	$ 27,515.52	12	$ 543.12	$0.00	$ 543.12	2%	$ 26,972.40
	TOTALS			**$ 373,583.66**		**$ 240,917.80**	**$0.00**	**$ 240,917.80**		**$ 132,665.86**

EJCDC No. C-620 (2002 Edition) 7/24/2018

Prepared by the Engineers' Joint Contract Documents Committee and endorsed by the Associated General Contractors of America and the Construction Specifications Institute.

Progress Estimate

Contractor's Application

For (contract):	COMPRENHENSIVE SEWER PHASE 5				Application Number:	43286				
Application Period:	5/26/2018 TO 6/25/2018				Application Date:	5-Jul-18				
	A			B	C	D	E	F		G
Pay Item	Item Description	Bid Quantity	Unit Price	Bid Value	Estimated Quantity Installed	Value	Materials Stored (not in C)	Total Completed and Stored to Date (D + E)	% (F)	Balance to Finish (B - F)
	Subtotal from Previous Page			$ 373,583.66		$ 240,917.80	$0.00	$ 240,917.80		$ 132,665.86
21	SELECT FILL MATERIAL (CLASS B, GROUP C), LVM	2495.0	$ 10.79	$ 26,921.05	56	$ 604.24	$0.00	$ 604.24	2%	$ 26,316.81
22	HOT MIX ASPHALT, ST, 9.5MM	208.0	$ 167.85	$ 34,912.80	-	$ -	$0.00	$ -	0%	$ 34,912.80
23	CONCRETE PAVEMENT REPAIR (ALL DEPTHS)	57.0	$ 59.95	$ 3,417.15	-	$ -	$0.00	$ -	0%	$ 3,417.15
24	REMOVAL OF CROSS DRAINS (ALL TYPES AND SIZES)	16.0	$ 11.99	$ 191.84	-	$ -	$0.00	$ -	0%	$ 191.84
25	30" REINFORCED CONCRETE PIPE, CLASS 3, RUBBER GASKETS	16.0	$ 95.92	$ 1,534.72	-	$ -	$0.00	$ -	0%	$ 1,534.72
26	CLASS "B" CONCRETE, MINOR STRUCTURES	5.0	$ 2,353.82	$ 11,769.10	-	$ -	$0.00	$ -	0%	$ 11,769.10
27	GRASSING	1.0	$ 3,896.56	$ 3,896.56	-	$ -	$0.00	$ -	0%	$ 3,896.56
28	EROSION CONTROL	1.0	$ 6,594.17	$ 6,594.17	1	$ 3,297.09	$0.00	$ 3,297.09	50%	$ 3,297.09
29	MOBILIZATION	1.0	$ 44,960.26	$ 44,960.26	1	$ 44,960.26	$0.00	$ 44,960.26	100%	$ -
30	MAINTENANCE OF TRAFFIC	1.0	$ 29,973.50	$ 29,973.50	1	$ 22,480.13	$0.00	$ 22,480.13	75%	$ 7,493.38
	SITE 2-CORRINE STREET, EMERALD LANE & DUKE AVENUE									
1	8" SDR 26 PVC SEWER PIPE (6'-8')	243.0	$ 24.46	$ 5,943.78	448	$ 10,958.08	$0.00	$ 10,958.08	184%	$ (5,014.30)
2	8" SDR 26 PVC SEWER PIPE (8'-10')	635.0	$ 26.56	$ 16,865.60	865	$ 22,974.40	$0.00	$ 22,974.40	136%	$ (6,108.80)
3	8" SDR 26 PVC SEWER PIPE (10'-12')	125.0	$ 28.95	$ 3,618.75	115	$ 3,329.25	$0.00	$ 3,329.25	92%	$ 289.50
4	8" SDR 26 PVC SEWER PIPE (12'-14')	137.0	$ 31.35	$ 4,294.95	145	$ 4,545.75	$0.00	$ 4,545.75	106%	$ (250.80)
5	8" SDR 26 PVC SEWER PIPE (14'-16')	102.0	$ 36.15	$ 3,687.30	102	$ 3,687.30	$0.00	$ 3,687.30	100%	$ -
6	8" SDR 26 PVC SEWER PIPE (16'-18')	187.0	$ 40.94	$ 7,655.78	327	$ 13,387.38	$0.00	$ 13,387.38	175%	$ (5,731.60)
7	8" SDR 11 HDPE SEWER SERVICE BORE	275.0	$ 59.47	$ 16,354.25	268	$ 15,937.96	$0.00	$ 15,937.96	97%	$ 416.29
8	15" SDR 26 PVC SEWER PIPE (6'-8')	733.0	$ 38.50	$ 28,220.50	647	$ 24,909.50	$0.00	$ 24,909.50	88%	$ 3,311.00
9	15" SDR 26 PVC SEWER PIPE (8'-10')	336.0	$ 43.29	$ 14,545.44	315	$ 13,636.35	$0.00	$ 13,636.35	94%	$ 909.09
10	15" SDR 26 PVC SEWER PIPE (10'-12')	225.0	$ 48.09	$ 10,820.25	266	$ 12,791.94	$0.00	$ 12,791.94	118%	$ (1,971.69)
11	24" STEEL CASING (BORED)	60.0	$ 213.46	$ 12,807.60	30	$ 6,403.80	$0.00	$ 6,403.80	50%	$ 6,403.80
	MANHOLE ITEMS									
12	48" PRECAST CONCRETE SEWER MANHOLE (8'-10')	3.0	$ 3,179.29	$ 9,537.87	4	$ 12,717.16	$0.00	$ 12,717.16	133%	$ (3,179.29)
13	48" PRECAST CONCRETE SEWER MANHOLE (12'-14')	1.0	$ 3,663.36	$ 3,663.36	1	$ 3,663.36	$0.00	$ 3,663.36	100%	$ -
	TOTALS			$ 675,770.24		$ 461,201.74	$0.00	$ 461,201.74		$ 214,568.50

EJCDC No. C-620 (2002 Edition)

Prepared by the Engineers' Joint Contract Documents Committee and endorsed by the Associated General Contractors of America and the Construction Specifications Institute.

Progress Estimate **Contractor's Application**

For (contract):	COMPRENHENSIVE SEWER PHASE 5				Application Number:	43286				
Application Period:	5/26/2018 TO 6/25/2018				Application Date:	5-Jul-18				
	A			B	C	D	E	F		G
Pay Item	Item Description	Bid Quantity	Unit Price	Bid Value	Estimated Quantity Installed	Value	Materials Stored (not in C)	Total Completed and Stored to Date (D + E)	% (F)	Balance to Finish (B - F)
	Subtotal from Previous Page			$ 675,770.24		$ 461,201.74	$0.00	$ 461,201.74		$ 214,568.50
14	48" PRECAST CONCRETE SEWER MANHOLE (14'-16')	1.0	$ 4,675.87	$ 4,675.87	1	$ 4,675.87	$0.00	$ 4,675.87	100%	$ -
15	60" PRECAST CONCRETE SEWER MANHOLE (6'-8')	3.0	$ 4,615.92	$ 13,847.76	2	$ 9,231.84	$0.00	$ 9,231.84	67%	$ 4,615.92
16	60" PRECAST CONCRETE SEWER MANHOLE (10'-12')	2.0	$ 4,991.79	$ 9,983.58	3	$ 14,975.37	$0.00	$ 14,975.37	150%	$ (4,991.79)
17	DROP MANHOLE ASSEMBLY (ALL DEPTHS)	3.0	$ 869.23	$ 2,607.69	1	$ 869.23	$0.00	$ 869.23	33%	$ 1,738.46
18	DEMOLITION AND REMOVAL OF EXISTING SEWER MANHOLE	8.0	$ 1,498.68	$ 11,989.44	8	$ 11,989.44	$0.00	$ 11,989.44	100%	$ -
	SEWER SERVICE ITEMS									
19	6" SDR 26 PVC SEWER PIPE FOR SERVICES (ALL DEPTHS)	270.0	$ 10.56	$ 2,851.20	846	$ 8,933.76	$0.00	$ 8,933.76	313%	$ (6,082.56)
20	8" X 8" X 6" PVC TEE	3.0	$ 323.75	$ 971.25	15	$ 4,856.25	$0.00	$ 4,856.25	500%	$ (3,885.00)
21	SERVICE CONNECTION (INSERT A TEE)	6.0	$ 585.08	$ 3,510.48	17	$ 9,946.36	$0.00	$ 9,946.36	283%	$ (6,435.88)
22	6" PVC CLEANOUT	9.0	$ 370.47	$ 3,334.23	32	$ 11,855.04	$0.00	$ 11,855.04	356%	$ (8,520.81)
	MISCELLANOUS CONSTRUCTION ITEMS									
23	WATER SERVICE REPAIR (INCLUDING SERIVCE TUBING, FITTIN	8.0	$ 669.01	$ 5,352.08	11	$ 7,359.11	$0.00	$ 7,359.11	138%	$ (2,007.03)
24	CRUSHED AGGREGRATE (SIZE 825)	1387.0	$ 44.96	$ 62,359.52	1,333.32	$ 59,946.07	$0.00	$ 59,946.07	96%	$ 2,413.45
25	SELECT FILL MATERIAL (CLASS 9, GROUP C), LVM	8090.0	$ 11.39	$ 92,145.10	3,332	$ 37,951.48	$0.00	$ 37,951.48	41%	$ 54,193.62
26	HOT MIX ASPHALT, ST, 9.5MM	530.0	$ 167.85	$ 88,960.50	-	$ -	$0.00	$ -	0%	$ 88,960.50
27	CONCRETE PAVEMENT REPAIR (ALL DEPTHS)	25.0	$ 59.95	$ 1,498.75	26	$ 1,563.50	$0.00	$ 1,563.50	104%	$ (64.75)
28	REMOVAL OF CROSS DRAINS (ALL TYPES AND SIZES)	180.0	$ 11.99	$ 2,158.20	288	$ 3,453.12	$0.00	$ 3,453.12	160%	$ (1,294.92)
29	12" REINFORCED CONCRETE PIPE, CLASS 3, RUBBER GASKETS	24.0	$ 39.57	$ 949.68	-	$ -	$0.00	$ -	0%	$ 949.68
30	18" REINFORCED CONCRETE PIPE, CLASS 3, RUBBER GASKETS	64.0	$ 43.16	$ 2,762.24	168	$ 7,250.88	$0.00	$ 7,250.88	263%	$ (4,488.64)
31	21" REINFORCED CONCRETE PIPE, CLASS 3, RUBBER GASKETS	40.0	$ 52.75	$ 2,110.00	-	$ -	$0.00	$ -	0%	$ 2,110.00
32	24" REINFORCED CONCRETE PIPE, CLASS 3, RUBBER GASKETS	48.0	$ 70.74	$ 3,395.52	120	$ 8,488.80	$0.00	$ 8,488.80	250%	$ (5,093.28)
33	CLASS "B" CONCRETE, MINOR STRUCTURES	1.0	$ 2,381.10	$ 2,381.10	-	$ -	$0.00	$ -	0%	$ 2,381.10
34	GRASSING	1.0	$ 3,896.56	$ 3,896.56	-	$ -	$0.00	$ -	0%	$ 3,896.56
35	EROSION CONTROL	1.0	$ 7,793.11	$ 7,793.11	1	$ 7,793.11	$0.00	$ 7,793.11	100%	$ -
36	MOBILIZATION	1.0	$ 41,962.90	$ 41,962.90	1.00	$ 41,962.90	$0.00	$ 41,962.90	100%	$ -
	TOTALS			$ 1,047,267.00		$ 714,303.86	$0.00	$ 714,303.86		$ 332,963.14

EJCDC No. C-620 (2002 Edition)

Prepared by the Engineers' Joint Contract Documents Committee and endorsed by the Associated General Contractors of America and the Construction Specifications Institute.

Progress Estimate

Contractor's Application

For (contract):	COMPRENHENSIVE SEWER PHASE 5				Application Number:	43286				
Application Period:	5/26/2018 TO 6/25/2018				Application Date:	5-Jul-18				
	A			B	C	D	E	F		G
Pay Item	Item Description	Bid Quantity	Unit Price	Bid Value	Estimated Quantity Installed	Value	Materials Stored (not in C)	Total Completed and Stored to Date (D + E)	% (F)	Balance to Finish (B - F)
	Subtotal from Previous Page			$ 1,047,267.00		$ 714,303.86	$0.00	$ 714,303.86		$ 332,963.14
37	MAINTENANCE OF TRAFFIC	1.0	$ 29,973.50	$ 29,973.50	1	$ 29,973.50	$0.00	$ 29,973.50	100%	$ -
0	0	0.0	$ -	$ -	-	$ -	$0.00	$ -	#DIV/0!	$ -
0	0	0.0	$ -	$ -	-	$ -	$0.00	$ -	#DIV/0!	$ -
0	0	0.0	$ -	$ -	-	$ -	$0.00	$ -	#DIV/0!	$ -
0	0	0.0	$ -	$ -	-	$ -	$0.00	$ -	#DIV/0!	$ -
0	0	0.0	$ -	$ -	-	$ -	$0.00	$ -	#DIV/0!	$ -
0	0	0.0	$ -	$ -	-	$ -	$0.00	$ -	#DIV/0!	$ -
0	0	0.0	$ -	$ -	-	$ -	$0.00	$ -	#DIV/0!	$ -
0	0	0.0	$ -	$ -	-	$ -	$0.00	$ -	#DIV/0!	$ -
0	0	0.0	$ -	$ -	-	$ -	$0.00	$ -	#DIV/0!	$ -
0	0	0.0	$ -	$ -	-	$ -	$0.00	$ -	#DIV/0!	$ -
0	0	0.0	$ -	$ -	-	$ -	$0.00	$ -	#DIV/0!	$ -
0	0	0.0	$ -	$ -	-	$ -	$0.00	$ -	#DIV/0!	$ -
0	0	0.0	$ -	$ -	-	$ -	$0.00	$ -	#DIV/0!	$ -
0	0	0.0	$ -	$ -	-	$ -	$0.00	$ -	#DIV/0!	$ -
0	0	0.0	$ -	$ -	-	$ -	$0.00	$ -	#DIV/0!	$ -
0	0	0.0	$ -	$ -	-	$ -	$0.00	$ -	#DIV/0!	$ -
0	0	0.0	$ -	$ -	-	$ -	$0.00	$ -	#DIV/0!	$ -
0	0	0.0	$ -	$ -	-	$ -	$0.00	$ -	#DIV/0!	$ -
0	0	0.0	$ -	$ -	-	$ -	$0.00	$ -	#DIV/0!	$ -
0	0	0.0	$ -	$ -	-	$ -	$0.00	$ -	#DIV/0!	$ -
0	0	0.0	$ -	$ -	-	$ -	$0.00	$ -	#DIV/0!	$ -
0	0	0.0	$ -	$ -	-	$ -	$0.00	$ -	#DIV/0!	$ -
	TOTALS			$ 1,077,240.50		$ 744,277.36	$0.00	$ 744,277.36		$ 332,963.14

Monthly Totals

	DESCRIPTION	1 Estimated Quantity Installed	2 Estimated Quantity Installed	3 Estimated Quantity Installed	4 Estimated Quantity Installed	5 Estimated Quantity Installed	6 Estimated Quantity Installed	7 Estimated Quantity Installed	8 Estimated Quantity Installed	9 Estimated Quantity Installed	10 Estimated Quantity Installed	TOTAL Estimated Quantity Installed
	SITE 1-DOGWOOD DRIVE											0
1	4" 160 PSI PVC SANITARY SEWER FORCE MAIN (ALL DEPTHS)						745					745
2	8" SDR 26 PVC SEWER PIPE (0-6')					423	543					966
3	8" SDR 26 PVC SEWER PIPE (6'-8')					151	184					335
4	8" SDR 26 PVC SEWER PIPE (8'-10')					96	50					146
5	8" SDR 26 PVC SEWER PIPE (10'-12')						48					48
6	8" SDR 26 PVC SEWER PIPE (12'-14')						55					55
7	AIR RELEASE AND VACUUM VALVE ASSEMBLY (INCLUDING PRECAST CONCRETE MANHOLE)											0
	MANHOLE ITEMS											0
8	48" PRECAST CONCRETE SEWER MANHOLE (0-6')						1					1
9	48" PRECAST CONCRETE SEWER MANHOLE (6'-8')					3	2					5
10	48" PRECAST CONCRETE SEWER MANHOLE (8'-10')					1						1
11	48" PRECAST CONCRETE SEWER MANHOLE (10'-12')											0
12	48" PRECAST CONCRETE SEWER MANHOLE (12'-14')						1					1
	SEWER SERVICE ITEMS											0
13	6" SDR 26 PVC SEWER PIPE FOR SERVICES (ALL DEPTHS)					144	369					513
14	8" X 8" X 6" PVC TEE					2	4					6
15	6" PVC CLEANOUT					3	4					7
	LIFT STATION ITEMS											0
16	LIFT STATION INCL CLEARING AND GRUBBING, BORROW MATERIAL, CRUSHED AGGREGRATE, CONCRETE WET WELL, PUMPS, ELECTRICAL, DISCONNECT, VAL'					0.25	0.5					0.75
	MISCELLANEOUS CONSTRUCTION ITEMS											0
17	ABANDONMENT OF SEPTIC TANKS											0
18	DROP MANHOLE ASSEMBLY (ALL DEPTHS)											0
19	WATER SERVICE REPAIR (INCLUDING SERVICE TUBING, FITTINGS, CORP STOP, CURB STOP, TAPPING SADDLE, ETC.)											0
20	CRUSHED AGGREGRATE (SIZE #25)					12.08						12.08

Monthly Totals

	DESCRIPTION	1 Estimated Quantity Installed	2 Estimated Quantity Installed	3 Estimated Quantity Installed	4 Estimated Quantity Installed	5 Estimated Quantity Installed	6 Estimated Quantity Installed	7 Estimated Quantity Installed	8 Estimated Quantity Installed	9 Estimated Quantity Installed	10 Estimated Quantity Installed	TOTAL Estimated Quantity Installed
21	SELECT FILL MATERIAL (CLASS 9, GROUP C), LVM					56						56
22	HOT MIX ASPHALT, ST, 9.5MM											0
23	CONCRETE PAVEMENT REPAIR (ALL DEPTHS)											0
24	REMOVAL OF CROSS DRAINS (ALL TYPES AND SIZES)											0
25	30" REINFORCED CONCRETE PIPE, CLASS 3, RUBBER GASKETS											0
26	CLASS "B" CONCRETE, MINOR STRUCTURES											0
27	GRASSING											0
28	EROSION CONTROL						0.5					0.5
29	MOBILIZATION					1						1
30	MAINTENANCE OF TRAFFIC					0.5	0.25					0.75
	SITE 2-CORRINE STREET, EMERALD LANE & DUKE AVENUE											0
1	8" SDR 26 PVC SEWER PIPE (6'-8')			28	420							448
2	8" SDR 26 PVC SEWER PIPE (8'-10')			111	754							865
3	8" SDR 26 PVC SEWER PIPE (10'-12')			115								115
4	8" SDR 26 PVC SEWER PIPE (12'-14')			145								145
5	8" SDR 26 PVC SEWER PIPE (14'-16')			77	25							102
6	8" SDR 26 PVC SEWER PIPE (16'-18')			215	112							327
7	8" SDR 11 HDPE SEWER SERVICE BORE			268								268
8	15" SDR 26 PVC SEWER PIPE (6'-8')		647									647
9	15" SDR 26 PVC SEWER PIPE (8'-10')	200	115									315
10	15" SDR 26 PVC SEWER PIPE (10'-12')	98	168									266
11	24" STEEL CASING (BORED)		30									30
	MANHOLE ITEMS											0
12	48" PRECAST CONCRETE SEWER MANHOLE (8'-10')				4							4
13	48" PRECAST CONCRETE SEWER MANHOLE (12'-14')			1								1

Monthly Totals

	DESCRIPTION	1 Estimated Quantity Installed	2 Estimated Quantity Installed	3 Estimated Quantity Installed	4 Estimated Quantity Installed	5 Estimated Quantity Installed	6 Estimated Quantity Installed	7 Estimated Quantity Installed	8 Estimated Quantity Installed	9 Estimated Quantity Installed	10 Estimated Quantity Installed	TOTAL Estimated Quantity Installed
14	48" PRECAST CONCRETE SEWER MANHOLE (14'-16')			1								1
15	60" PRECAST CONCRETE SEWER MANHOLE (6'-8')		2									2
16	60" PRECAST CONCRETE SEWER MANHOLE (10'-12')	2	1									3
17	DROP MANHOLE ASSEMBLY (ALL DEPTHS)		1									1
18	DEMOLITION AND REMOVAL OF EXISTING SEWER MANHOLE		5		3							8
	SEWER SERVICE ITEMS											0
19	6" SDR 26 PVC SEWER PIPE FOR SERVICES (ALL DEPTHS)	17	236	333	260							846
20	8" X 8" X 6" PVC TEE			10	5							15
21	SERVICE CONNECTION (INSERT A TEE)	1	16									17
22	6" PVC CLEANOUT	1	13	11	7							32
	MISCELLANOUS CONSTRUCTION ITEMS											0
23	WATER SERVICE REPAIR (INCLUDING SERIVCE TUBING, FITTINGS, CORP STOP, CURB STOP, TAPPING SADDL		3	8								11
24	CRUSHED AGGREGRATE (SIZE 825)	111.39	538.72	451.21	232							1333.32
25	SELECT FILL MATERIAL (CLASS 9, GROUP C), LVM		716	1762	854							3332
26	HOT MIX ASPHALT, ST, 9.5MM											0
27	CONCRETE PAVEMENT REPAIR (ALL DEPTHS)				26.08							26.08
28	REMOVAL OF CROSS DRAINS (ALL TYPES AND SIZES)		88		200							288
29	12" REINFORCED CONCRETE PIPE, CLASS 3, RUBBER GASKETS											0
30	18" REINFORCED CONCRETE PIPE, CLASS 3, RUBBER GASKETS	40	48		80							168
31	21" REINFORCED CONCRETE PIPE, CLASS 3, RUBBER GASKETS											0
32	24" REINFORCED CONCRETE PIPE, CLASS 3, RUBBER GASKETS				120							120
33	CLASS "B" CONCRETE, MINOR STRUCTURES		0									0
34	GRASSING											0
35	EROSION CONTROL				0.5		0.5					1
36	MOBILIZATION	0.5	0.5									1

Monthly Totals

	DESCRIPTION	1 Estimated Quantity Installed	2 Estimated Quantity Installed	3 Estimated Quantity Installed	4 Estimated Quantity Installed	5 Estimated Quantity Installed	6 Estimated Quantity Installed	7 Estimated Quantity Installed	8 Estimated Quantity Installed	9 Estimated Quantity Installed	10 Estimated Quantity Installed	TOTAL Estimated Quantity Installed
37	MAINTENANCE OF TRAFFIC		0.5		0.5							1
0	0											0
0	0											0
0	0											0
0	0											0
0	0											0
0	0											0
0	0											0
0	0											0
0	0											0
0	0											0
0	0											0
0	0											0
0	0											0
0	0											0
0	0											0
0	0											0
0	0											0
0	0											0
0	0											0
0	0											0
0	0											0
0	0											0
0	0											0

sdw
Engineering Progress

July 25, 2018

City of Hattiesburg
Post Office Box 1898
Hattiesburg MS 39403-1898

Attn: Lamar Rutland, P.E.

RE: **Comprehensive Water Improvements Ph II -**
City of Hattiesburg

Dear Mr. Rutland:

Enclosed please find Pay Estimate No. 6 for the above referenced project in the amount of $189,291.09.

Should you have any questions and/or comments, please, do not hesitate to contact me.

Sincerely,

Kyle D. Wallace, P.E.
Project Engineer

/aa

cc: Terry Jackson, SDW

RECEIVED 7/30/18

093695.7245.51
MB 2017-340

301 Second Ave. | Hattiesburg, MS 39401 | (p) 601.544.1821 | (f) 601.544.0501 | sd-w.com

Contractor's Application For Payment No. 6

	Application Period: Beginning: 5/26/2018 Ending: 6/25/2018	Application Date: 5-Jul-18
To (Owner): City of Hattiesburg, Mississippi	From (Contractor): C.B. Developers, Inc.	Via (Engineer): Shows, Dearman & Waits Inc.
Project: Comprehensive Water Improvements Phase II	Contract:	
Owner's Contract No.: Not Applicable	Contractor's Project No.:	Engineer's Project No.:

Change Order Summary

Approved Change Orders		
Number	Additions	Deductions
TOTALS	$ -	$ -
NET CHANGE BY CHANGE ORDERS	$ -	

1. ORIGINAL CONTRACT PRICE	$	2,054,414.75
2. Net change by Change Orders	$	-
3. CURRENT CONTRACT PRICE (LINE 1 + 2)	$	2,054,414.75
4. TOTAL COMPLETED AND STORED TO DATE (Column F on Progress Estimates)	$	1,690,310.31
5. RETAINAGE:		
a. 5.0 % x Work Completed	$	76,242.43
b. 5.0% x Stored Material	$	8,273.09
c. Total Retainage (line 5a + line 5b)	$	84,515.52
6. AMOUNT ELIGIBLE TO DATE (Line 4 - Line 5c)	$	1,605,794.79
7. LESS PREVIOUS PAYMENTS (Line 6 from prior Application)	$	1,416,503.70
8. AMOUNT DUE THIS APPLICATION	$	***189,291.09***
9. BALANCE TO FINISH, PLUS RETAINAGE (Column G on Progress Estimate + Line 5 above)	$	448,619.97

CONTRACTOR'S CERTIFICATION

The undersigned Contractor certifies that: (1) all previous progress payments received from Owner on account of Work done under the Contract have been applied on account to discharge Contractor's legitimate obligations incurred in connection with Work covered by prior Applications for Payment; (2) title of all Work, materials and equipment incorporated in said Work or otherwise listed in or covered by this Application for Payment will pass to Owner at time of payment free and clear of all Liens, security interests and encumbrances (except such as are covered by a Bond acceptable to Owner indemnifying Owner against any such Liens, security interest or encumbrances); and (3) all Work covered by this Application for Payment is in accordance with the Contract Documents and is not defective.

By: Date: 7-25-18

Payment of: $189,291.09
(Line 8 or other - attach explanation of other amount)

Is recommended by: (Engineer) (Date) 7-27-18

Payment of: $189,291.09
(Line 8 or other - attach explanation of other amount)

Is approved by: (Owner) (Date)

Is approved by: (Owner) (Date)

Approved by: (Funding Agency, if applicable) (Date)

Progress Estimate

6 'actor's Application

For (contract):	Comprehensive Water Improvements Phase II	5/26/2018	6/25/2018	Application Num	7/5/2018	6
Application Period:	5/26/2018 TO 6/25/2018			Application Date:	5-Jul-18	

	A			B	C	D	E	F		G
Pay Item	Item Description	Bid Quantity	Unit Price	Bid Value	Estimated Quantity Installed	Value	Materials Stored (not in C)	Total Completed and Stored to Date (D + E)	% (F)	Balance to Finish (B - F)
	WATER PIPE ITEMS									
1	**4" CLASS 350 DUCTILE IRON WATER PIPE (OPEN CUT)**	**260.0**	$ 25.44	$ 6,614.40	104	$ 2,645.76	$ 2,442.96	$ 5,088.72	77%	$ 1,525.68
2	**6" CLASS 350 DUCTILE IRON WATER PIPE (OPEN CUT)**	**280.0**	$ 23.74	$ 6,647.20	52	$ 1,234.48	$ 2,355.24	$ 3,589.72	54%	$ 3,057.48
3	**8" CLASS 350 DUCTILE IRON WATER PIPE (OPEN CUT)**	**590.0**	$ 23.72	$ 13,994.80	1,700	$ 40,324.00	$ -	$ 40,324.00	288%	$ (26,329.20)
4	**12" CLASS 350 DUCTILE IRON WATER PIPE (OPEN CUT)**	**27000.0**	$ 31.08	$ 839,160.00	24,732	$ 768,670.56	$ 50,054.76	$ 818,725.32	98%	$ 20,434.68
5	**12" CLASS 350 DUCTILE IRON WATER PIPE (BORED-NO CASING**	**1090.0**	$ 66.98	$ 73,008.20	1,027	$ 68,788.46	$ -	$ 68,788.46	94%	$ 4,219.74
6	**16" 200 PSI, DR9, HDPE (OPEN CUT)(INCL ADAPTER FITTINGS)**	**780.0**	$ 111.27	$ 86,790.60	-	$ -	$ 45,466.20	$ 45,466.20	52%	$ 41,324.40
7	**16" 200 PSI, DR9, HDPE (DIRECTION BORE)(INCL ADAPTER FIT**	**460.0**	$ 133.85	$ 61,571.00	1,157	$ 154,864.45	$ -	$ 154,864.45	252%	$ (93,293.45)
	CASING ITEMS									
8	**18" STEEL CASING, 0.25" WT (OPEN CUT)**	**20.0**	$ 112.00	$ 2,240.00	40	$ 4,480.00	$ -	$ 4,480.00	200%	$ (2,240.00)
9	**14" STEEL CASING, 0.25" WT (BORED)**	**40.0**	$ 94.99	$ 3,799.60	-	$ -	$ 955.60	$ 955.60	25%	$ 2,844.00
10	**18" STEEL CASING, 0.25" WT (BORED)**	**610.0**	$ 112.44	$ 68,588.40	590	$ 66,339.60	$ 733.20	$ 67,072.80	98%	$ 1,515.60
11	**20" STEEL CASING, 0.375"WT (BORED-RAILROAD)**	**740.0**	$ 295.72	$ 218,832.80	-	$ -	$ -	$ -		$ 218,832.80
	CONNECTION ITEMS									
12	**CONNECTION: PROPOSED 12" TO EXISTING 12" (STRAIGHT CC**	**2.0**	$ 1,509.99	$ 3,019.98	2	$ 3,019.98	$ -	$ 3,019.98	100%	$ -
13	**CONNECTION: PROPOSED 12" TO EXISTING 12" (HOT TAP w/**	**3.0**	$ 6,603.33	$ 19,809.99	1	$ 6,603.33	$ 5,786.40	$ 12,389.73	63%	$ 7,420.26
14	**CONNECTION: PROPOSED 12" TO PROPOSED 12" (TEE & OTH**	**5.0**	$ 1,741.31	$ 8,706.55	3	$ 5,223.93	$ 1,627.64	$ 6,851.57	79%	$ 1,854.98
15	**CONNECTION: PROPOSED 12" TO PROPOSED 12" & 8" (TEE &**	**1.0**	$ 2,191.77	$ 2,191.77	1	$ 2,191.77	$ -	$ 2,191.77	100%	$ -
16	**CONNECTION: PROPOSED 12" TO PROPOSED 8" (TEE & OTHE**	**2.0**	$ 1,723.93	$ 3,447.86	-	$ -	$ 684.46	$ 684.46	20%	$ 2,763.40
17	**CONNECTION: PROPOSED 12" TO PROPOSED 12" & EXISTING**	**1.0**	$ 3,061.78	$ 3,061.78	1	$ 3,061.78	$ -	$ 3,061.78	100%	$ -
18	**CONNECTION: PROPOSED 12" TO PROPOSED 12" & EXISTING**	**2.0**	$ 2,263.80	$ 4,527.60	3	$ 6,791.40	$ -	$ 6,791.40	150%	$ (2,263.80)
19	**CONNECTION: PROPOSED 12" TO EXISTING 6" (TEE & OTHER**	**10.0**	$ 1,878.23	$ 18,782.30	1	$ 1,878.23	$ 2,328.48	$ 4,206.71	22%	$ 14,575.59
20	**CONNECTION: PROPOSED 12" TO EXISTING 6" & 4" (TEES & O**	**1.0**	$ 2,813.19	$ 2,813.19	-	$ -	$ 258.72	$ 258.72	9%	$ 2,554.47
21	**CONNECTION: PROPOSED 12" TO EXISTING 6" & 4" (CROSS &**	**1.0**	$ 3,093.80	$ 3,093.80	1	$ 3,093.80	$ -	$ 3,093.80	100%	$ -
22	**CONNECTION: PROPOSED 12" TO EXISTING 4" (TEE & OTHER**	**12.0**	$ 2,025.74	$ 24,308.88	5	$ 10,128.70	$ 1,811.04	$ 11,939.74	49%	$ 12,369.14
	TOTALS			**$ 1,475,010.70**		**$ 1,149,340.23**	**$114,504.70**	**$ 1,263,844.93**		**$ 211,165.77**

EJCDC No. C-620 (2002 Edition) 6/5/2018

Prepared by the Engineers' Joint Contract Documents Committee and endorsed by the Associated General Contractors of America and the Construction Specifications Institute.

Progress Estimate **Contractor's Application**

For (contract):	Comprehensive Water Improvements Phase II				Application Number:	6				
Application Period:	5/26/2018 TO 6/25/2018				Application Date:	5-Jul-18				
	A			B	C	D	E	F		G
Pay Item	Item Description	Bid Quantity	Unit Price	Bid Value	Estimated Quantity Installed	Value	Materials Stored (not in C)	Total Completed and Stored to Date (D + E)	% (F)	Balance to Finish (B - F)
	Subtotal from Previous Page			$ 1,475,010.70		$ 1,149,340.23	$114,504.70	$ 1,263,844.93		$ 211,165.77
23	CONNECTION: PROPOSED 8" TO EXISTING 12" (HOT TAP w/ V	1.0	$ 3,660.35	$ 3,660.35	1	$ 3,660.35	$ -	$ 3,660.35	100%	$ -
24	CONNECTION: PROPOSED 8" TO EXISTING 6" (TEE & OTHER F	1.0	$ 1,702.56	$ 1,702.56	1	$ 1,702.56	$ -	$ 1,702.56	100%	$ -
25	CONNECTION: PROPOSED 8" TO EXISTING 6" & 4" (TEES & OT	1.0	$ 2,657.87	$ 2,657.87	2	$ 5,315.74	$ -	$ 5,315.74	200%	$ (2,657.87)
	VALVE ITEMS									
26	4" GATE VALVE	9.0	$ 684.95	$ 6,164.55	12	$ 8,219.40	$ -	$ 8,219.40	133%	$ (2,054.85)
27	6" GATE VALVE	14.0	$ 840.19	$ 11,762.66	14	$ 11,762.66	$ -	$ 11,762.66	100%	$ -
28	8" GATE VALVE	4.0	$ 1,154.21	$ 4,616.84	9	$ 10,387.89	$ -	$ 10,387.89	225%	$ (5,771.05)
29	12" GATE VALVE	66.0	$ 2,036.87	$ 134,433.42	48	$ 97,769.76	$ 27,547.02	$ 125,316.78	93%	$ 9,116.64
	FIRE PROTECTION ITEMS									
30	3 WAY FIRE HYDRANT w/ APPURTENANCES (INCL. TEE, VALVE	42.0	$ 3,708.92	$ 155,774.64	35	$ 129,812.20	$ 18,515.07	$ 148,327.27	95%	$ 7,447.37
31	6" FIRE SUPPRESSION SYSTEM CONNECTION (INCL. TEE, VALVI	1.0	$ 4,146.85	$ 4,146.85	-	$ -	$ -	$ -		$ 4,146.85
	SERVICE ITEMS									
32	RESIDENTIAL SERVICE TAP (ALL SIZES) (INCL. OPEN CUT SERVIC	99.0	$ 445.19	$ 44,073.81	103	$ 45,854.57	$ -	$ 45,854.57	104%	$ (1,780.76)
33	COMMERCIAL SERVICE TAP (ALL SIZES) (INCL. OPEN CUT SERV	17.0	$ 1,085.64	$ 18,455.88	8	$ 8,685.12	$ 4,894.92	$ 13,580.04	74%	$ 4,875.84
34	SERVICE TUBING (BORED) (ALL SIZES)	1585.0	$ 4.13	$ 6,546.05	2,754	$ 11,374.02	$ -	$ 11,374.02	174%	$ (4,827.97)
35	RESIDENTIAL METER (INCL. METER, METER BOX, CITY FEES, ET	15.0	$ 550.23	$ 8,253.45	-	$ -	$ -	$ -		$ 8,253.45
	REMOVAL ITEMS									
36	REMOVAL OF FIRE HYDRANT AND APPURTENANCES	24.0	$ 409.36	$ 9,824.64	1	$ 409.36	$ -	$ 409.36	4%	$ 9,415.28
37	ABANDONMENT OF EXISTING WATER LINES WITH FLOWABLE	760.0	$ 7.75	$ 5,890.00	-	$ -	$ -	$ -		$ 5,890.00
38	REMOVE AND RESET EXISTING STORM SEWER CULVERTS (ALL	1.0	$ 4,678.36	$ 4,678.36	-	$ -	$ -	$ -		$ 4,678.36
	MISCELLANEOUS CONSTRUCTION ITEMS									
39	SELECT FILL MATERIAL (CLASS 9, GROUP C), LVM FOR GRAVEL	35.0	$ 21.05	$ 736.75	242	$ 5,094.10	$ -	$ 5,094.10	691%	$ (4,357.35)
40	ASPHALT PAVEMENT REPAIR (ALL DEPTHS)	460.0	$ 181.29	$ 83,393.40	15	$ 2,670.40	$ -	$ 2,670.40	3%	$ 80,723.00
41	CONCRETE PAVEMENT REPAIR (ALL DEPTHS)	338.0	$ 116.96	$ 39,532.48	73	$ 8,566.15	$ -	$ 8,566.15	22%	$ 30,966.33
42	CONCRETE CURB AND GUTTER REPAIR (MATCH EXISTING IN K	25.0	$ 58.48	$ 1,462.00	-	$ -	$ -	$ -		$ 1,462.00
	TOTALS			$ 2,022,777.26		$ 1,500,624.51	$165,461.71	$ 1,666,086.22		$ 356,691.04

EJCDC No. C-620 (2002 Edition)

Prepared by the Engineers' Joint Contract Documents Committee and endorsed by the Associated General Contractors of America and the Construction Specifications Institute.

Progress Estimate **Contractor's Application**

For (contract):	Comprehensive Water Improvements Phase II				Application Number:	6				
Application Period:	5/26/2018 TO 6/25/2018				Application Date:	5-Jul-18				
	A			B	C	D	E	F		G
Pay Item	Item Description	Bid Quantity	Unit Price	Bid Value	Estimated Quantity Installed	Value	Materials Stored (not in C)	Total Completed and Stored to Date (D + E)	% (F)	Balance to Finish (B - F)
	Subtotal from Previous Page			$ 2,022,777.26		$ 1,500,624.51	$165,461.71	$ 1,666,086.22		$ 356,691.04
43	CRUSHED AGGREGATE FOR ROAD REPAIR (SIZE 825)	151.0	$ 58.48	$ 8,830.48	239	$ 13,990.17	$ -	$ 13,990.17	158%	$ (5,159.69)
44	TEMPORARY EROSION CONTROL	1.0	$ 6,432.75	$ 6,432.75	-	$ -	$ -	$ -		$ 6,432.75
45	GRASSING	1.0	$ 4,678.36	$ 4,678.36	-	$ -	$ -	$ -		$ 4,678.36
46	MAINTENANCE OF TRAFFIC	1.0	$ 5,847.95	$ 5,847.95	1	$ 4,385.96	$ -	$ 4,385.96	75%	$ 1,461.99
47	MOBILIZATION	1.0	$ 5,847.95	$ 5,847.95	1	$ 5,847.95	$ -	$ 5,847.95	100%	$ -
			$ -	$ -	-	$ -	$ -	$ -	#DIV/0!	$ -
			$ -	$ -	-	$ -	$ -	$ -	#DIV/0!	$ -
			$ -	$ -	-	$ -	$ -	$ -	#DIV/0!	$ -
			$ -	$ -	-	$ -	$ -	$ -	#DIV/0!	$ -
			$ -	$ -	-	$ -	$ -	$ -	#DIV/0!	$ -
			$ -	$ -	-	$ -	$ -	$ -	#DIV/0!	$ -
			$ -	$ -	-	$ -	$ -	$ -	#DIV/0!	$ -
			$ -	$ -	-	$ -	$ -	$ -	#DIV/0!	$ -
			$ -	$ -	-	$ -	$ -	$ -	#DIV/0!	$ -
			$ -	$ -	-	$ -	$ -	$ -	#DIV/0!	$ -
			$ -	$ -	-	$ -	$ -	$ -	#DIV/0!	$ -
			$ -	$ -	-	$ -	$ -	$ -	#DIV/0!	$ -
			$ -	$ -	-	$ -	$ -	$ -	#DIV/0!	$ -
			$ -	$ -	-	$ -	$ -	$ -	#DIV/0!	$ -
			$ -	$ -	-	$ -	$ -	$ -	#DIV/0!	$ -
			$ -	$ -	-	$ -	$ -	$ -	#DIV/0!	$ -
			$ -	$ -	-	$ -	$ -	$ -	#DIV/0!	$ -
			$ -	$ -	-	$ -	$ -	$ -	#DIV/0!	$ -
	TOTALS			$ 2,054,414.75		$ 1,524,848.60	$165,461.71	$ 1,690,310.31		$ 364,104.45

EJCDC No. C-620 (2002 Edition)

Prepared by the Engineers' Joint Contract Documents Committee and endorsed by the Associated General Contractors of America and the Construction Specifications Institute.

Monthly Totals

	DESCRIPTION	1 Estimated Quantity Installed	2 Estimated Quantity Installed	3 Estimated Quantity Installed	4 Estimated Quantity Installed	5 Estimated Quantity Installed	6 Estimated Quantity Installed	7 Estimated Quantity Installed	8 Estimated Quantity Installed	9 Estimated Quantity Installed	10 Estimated Quantity Installed	TOTAL Estimated Quantity Installed
	WATER PIPE ITEMS											
1	4" CLASS 350 DUCTILE IRON WATER PIPE (OPEN CUT)	4	2		40	4	54					104
2	6" CLASS 350 DUCTILE IRON WATER PIPE (OPEN CUT)	6	20		6	12	8					52
3	8" CLASS 350 DUCTILE IRON WATER PIPE (OPEN CUT)	60	1260			320	60					1700
4	12" CLASS 350 DUCTILE IRON WATER PIPE (OPEN CUT)	4560	5380	2980	5646	4479	1687					24732
5	12" CLASS 350 DUCTILE IRON WATER PIPE (BORED-NO CASING)	20		140	380	20	467					1027
6	16" 200 PSI, DR9, HDPE (OPEN CUT)(INCL ADAPTER FITTINGS)		80	80								
7	16" 200 PSI, DR9, HDPE (DIRECTION BORE)(INCL ADAPTER FITTINGS)			177	360		620					1157
	CASING ITEMS											
8	18" STEEL CASING, 0.25" WT (OPEN CUT)		40									40
9	14" STEEL CASING, 0.25" WT (BORED)											
10	18" STEEL CASING, 0.25" WT (BORED)			80	245		265					590
11	20" STEEL CASING, 0.375"WT (BORED-RAILROAD)											
	CONNECTION ITEMS											
12	CONNECTION: PROPOSED 12" TO EXISTING 12" (STRAIGHT CONNECTION w/ FITTIN				1	1						2
13	CONNECTION: PROPOSED 12" TO EXISTING 12" (HOT TAP w/ VALVE ASSEMBLY & O				1							1
14	CONNECTION: PROPOSED 12" TO PROPOSED 12" (TEE & OTHER FITTINGS)				2		1					3
15	CONNECTION: PROPOSED 12" TO PROPOSED 12" & 8" (TEE & OTHER FITTINGS)					1						1
16	CONNECTION: PROPOSED 12" TO PROPOSED 8" (TEE & OTHER FITTINGS)											
17	CONNECTION: PROPOSED 12" TO PROPOSED 12" & EXISTING 8" & 6" (TEES & OTHE					1						1
18	CONNECTION: PROPOSED 12' TO PROPOSED 12" & EXISTING 4" (TEE & OTHER FITT			1		2						3
19	CONNECTION: PROPOSED 12" TO EXISTING 6" (TEE & OTHER FITTINGS)		1									1
20	CONNECTION: PROPOSED 12" TO EXISTING 6" & 4" (TEES & OTHER FITTINGS)											
21	CONNECTION: PROPOSED 12" TO EXISTING 6" & 4" (CROSS & OTHER FITTINGS)			1								1
22	CONNECTION: PROPOSED 12" TO EXISTING 4" (TEE & OTHER FITTINGS)	3	1				1					5

Monthly Totals

	DESCRIPTION	1 Estimated Quantity Installed	2 Estimated Quantity Installed	3 Estimated Quantity Installed	4 Estimated Quantity Installed	5 Estimated Quantity Installed	6 Estimated Quantity Installed	7 Estimated Quantity Installed	8 Estimated Quantity Installed	9 Estimated Quantity Installed	10 Estimated Quantity Installed	TOTAL Estimated Quantity Installed
23	CONNECTION: PROPOSED 8" TO EXISTING 12" (HOT TAP w/ VALVE ASSEMBLY & OT	1										1
24	CONNECTION: PROPOSED 8" TO EXISTING 6" (TEE & OTHER FITTINGS)				1							1
25	CONNECTION: PROPOSED 8" TO EXISTING 6" & 4" (TEES & OTHER FITTINGS)		2									2
	VALVE ITEMS											
26	4" GATE VALVE	3	4	2		1	2					12
27	6" GATE VALVE		1	1	5	7						14
28	8" GATE VALVE		6		1	2						9
29	12" GATE VALVE	4	6	4	12	17	5					48
	FIRE PROTECTION ITEMS											
30	3 WAY FIRE HYDRANT w/ APPURTENANCES (INCL. TEE, VALVE, HYDRANT, BRASS TA	5	5	4	7	9	5					35
31	6" FIRE SUPPRESSION SYSTEM CONNECTION (INCL. TEE, VALVE, PIPE, DISCONNECTI											
	SERVICE ITEMS											
32	RESIDENTIAL SERVICE TAP (ALL SIZES) (INCL. OPEN CUT SERVICE TUBING, TAPPING S		3		2	23	75					103
33	COMMERCIAL SERVICE TAP (ALL SIZES) (INCL. OPEN CUT SERVICE TUBING, TAPPING		3		1		4					8
34	SERVICE TUBING (BORED) (ALL SIZES)					743	2011					2754
35	RESIDENTIAL METER (INCL. METER, METER BOX, CITY FEES, ETC.)											
	REMOVAL ITEMS											
36	REMOVAL OF FIRE HYDRANT AND APPURTENANCES						1					1
37	ABANDONMENT OF EXISTING WATER LINES WITH FLOWABLE FILL											
38	REMOVE AND RESET EXISTING STORM SEWER CULVERTS (ALL SIZES)											
	MISCELLANEOUS CONSTRUCTION ITEMS											
39	SELECT FILL MATERIAL (CLASS 9, GROUP C), LVM FOR GRAVEL DRIVEWAY REPAIR	32	14		154	42						242
40	ASPHALT PAVEMENT REPAIR (ALL DEPTHS)			9.14	5.59							14.73
41	CONCRETE PAVEMENT REPAIR (ALL DEPTHS)			24.46	48.78							73.24
42	CONCRETE CURB AND GUTTER REPAIR (MATCH EXISTING IN KIND)											

Monthly Totals

	DESCRIPTION	1 Estimated Quantity Installed	2 Estimated Quantity Installed	3 Estimated Quantity Installed	4 Estimated Quantity Installed	5 Estimated Quantity Installed	6 Estimated Quantity Installed	7 Estimated Quantity Installed	8 Estimated Quantity Installed	9 Estimated Quantity Installed	10 Estimated Quantity Installed	TOTAL Estimated Quantity Installed
43	CRUSHED AGGREGATE FOR ROAD REPAIR (SIZE 825)	24.26	7.72	15.67	123.91	67.67						239.23
44	TEMPORARY EROSION CONTROL											
45	GRASSING											
46	MAINTENANCE OF TRAFFIC		0.5				0.25					0.75
47	MOBILIZATION		0.5			0.5						1

Stored Material Summary

6 's Application

For (contract):	Comprehensive Water Improvements Phase II	5/26/2018	6/25/2018	7/5/2018	6
Application Period:	5/26/2018 TO 6/25/2018			Application Date:	5-Jul-18

A	B	C	D		E		F		G
			Stored Previously		Stored this Month		Incorporated in Work		
Pay Item No.	Unit Price	Materials Description	Quantity	Amount ($)	Quantity	Amount ($)	Quantity	Amount ($)	Materials Remaining in Storage ($) (D + E - F)
		WATER PIPE ITEMS	-	$ -		$ -		$ -	$ -
1	$ 15.66	4" CLASS 350 DUCTILE IRON WATER PIPE (OPEN CUT)	260	$ 4,071.60		$ -	104	$ 1,628.64	$ 2,442.96
2	$ 10.33	6" CLASS 350 DUCTILE IRON WATER PIPE (OPEN CUT)	280	$ 2,892.40		$ -	52	$ 537.16	$ 2,355.24
3	$ 13.00	8" CLASS 350 DUCTILE IRON WATER PIPE (OPEN CUT)	590	$ 7,670.00		$ -	1,700	$ 22,100.00	$ -
4	$ 22.07	12" CLASS 350 DUCTILE IRON WATER PIPE (OPEN CUT)	27,000	$ 595,890.00		$ -	24,732	$ 545,835.24	$ 50,054.76
5	$ 21.27	12" CLASS 350 DUCTILE IRON WATER PIPE (BORED-NO CASING)	390	$ 8,295.30		$ -	1,027	$ 21,844.29	$ -
6	$ 58.29	16" 200 PSI, DR9, HDPE (OPEN CUT)(INCL ADAPTER FITTINGS)	-	$ -	780	$ 45,466.20		$ -	$ 45,466.20
7	$ 58.29	16" 200 PSI, DR9, HDPE (DIRECTION BORE)(INCL ADAPTER FITTINGS)	-	$ -	460	$ 26,813.40	1,157	$ 67,441.53	$ -
		CASING ITEMS	-	$ -		$ -		$ -	$ -
8	$ 27.44	18" STEEL CASING, 0.25" WT (OPEN CUT)	-	$ -	20	$ 548.80	40	$ 1,097.60	$ -
9	$ 23.89	14" STEEL CASING, 0.25" WT (BORED)	-	$ -	40	$ 955.60		$ -	$ 955.60
10	$ 36.66	18" STEEL CASING, 0.25" WT (BORED)	-	$ -	610	$ 22,362.60	590	$ 21,629.40	$ 733.20
11		20" STEEL CASING, 0.375"WT (BORED-RAILROAD)	-	$ -		$ -		$ -	$ -
		CONNECTION ITEMS	-	$ -		$ -		$ -	$ -
12	$ 258.72	CONNECTION: PROPOSED 12" TO EXISTING 12" (STRAIGHT CONNECTION w/ FITTINGS)	-	$ -	2	$ 517.44	2	$ 517.44	$ -
13	$ 2,893.20	CONNECTION: PROPOSED 12" TO EXISTING 12" (HOT TAP w/ VALVE ASSEMBLY & OTHER FITTIN	-	$ -	3	$ 8,679.60	1	$ 2,893.20	$ 5,786.40
14	$ 813.82	CONNECTION: PROPOSED 12" TO PROPOSED 12" (TEE & OTHER FITTINGS)	-	$ -	5	$ 4,069.10	3	$ 2,441.46	$ 1,627.64
15	$ 684.46	CONNECTION: PROPOSED 12" TO PROPOSED 12" & 8" (TEE & OTHER FITTINGS)	-	$ -	1	$ 684.46	1	$ 684.46	$ -
16	$ 684.46	CONNECTION: PROPOSED 12" TO PROPOSED 8" (TEE & OTHER FITTINGS)	-	$ -	1	$ 684.46		$ -	$ 684.46
17	$ 684.46	CONNECTION: PROPOSED 12" TO PROPOSED 12" & EXISTING 8" & 6" (TEES & OTHER FITTINGS)	-	$ -	1	$ 684.46	1	$ 684.46	$ -
18	$ 684.46	CONNECTION: PROPOSED 12" TO PROPOSED 12" & EXISTING 4" (TEE & OTHER FITTINGS)	-	$ -		$ -	3	$ 2,053.38	$ -
19	$ 258.72	CONNECTION: PROPOSED 12" TO EXISTING 6" (TEE & OTHER FITTINGS)	-	$ -	10	$ 2,587.20	1	$ 258.72	$ 2,328.48
20	$ 258.72	CONNECTION: PROPOSED 12" TO EXISTING 6" & 4" (TEES & OTHER FITTINGS)	-	$ -	1	$ 258.72		$ -	$ 258.72
21		CONNECTION: PROPOSED 12" TO EXISTING 6" & 4" (CROSS & OTHER FITTINGS)	-	$ -		$ -	1	$ -	$ -
22	$ 258.72	CONNECTION: PROPOSED 12" TO EXISTING 4" (TEE & OTHER FITTINGS)	-	$ -	12	$ 3,104.64	5	$ 1,293.60	$ 1,811.04
		TOTALS		$ 618,819.30		$ 117,416.68		$ 692,940.58	$114,504.70
		6/5/2018							

EJCDC No. C-620 (2002 Edition)

Prepared by the Engineers' Joint Contract Documents Committee and endorsed by the Associated General Contractors of America and the Construction Specifications Institute.

Stored Material Summary

Contractor's Application

For (contract):	Comprehensive Water Improvements Phase II								Application Number: 6
Application Period:	5/26/2018 TO 6/25/2018								Application Date: 5-Jul-18
A	B	C	D		E		F		G
			Stored Previously		Stored this Month		Incorporated In Work		
Pay Item No.	Unit Price	Materials Description	Quantity	Amount ($)	Quantity	Amount ($)	Quantity	Amount ($)	Materials Remaining in Storage ($) (D + E - F)
		Subtotal From Previous Page		618819.3		117416.68		692940.58	114504.7
23		CONNECTION: PROPOSED 8" TO EXISTING 12" (HOT TAP w/ VALVE ASSEMBLY & OTHER FITTING	-	$ -		$ -	1	$ -	$ -
24		CONNECTION: PROPOSED 8" TO EXISTING 6" (TEE & OTHER FITTINGS)	-	$ -		$ -	1	$ -	$ -
25		CONNECTION: PROPOSED 8" TO EXISTING 6" & 4" (TEES & OTHER FITTINGS)	-	$ -		$ -	2	$ -	$ -
		VALVE ITEMS	-	$ -		$ -		$ -	$ -
26	$ 499.88	4" GATE VALVE	-	$ -	9	$ 4,498.92	12	$ 5,998.56	$ -
27	$ 602.61	6" GATE VALVE	-	$ -	14	$ 8,436.54	14	$ 8,436.54	$ -
28	$ 135.08	8" GATE VALVE	-	$ -	4	$ 540.32	9	$ 1,215.72	$ -
29	$ 1,530.39	12" GATE VALVE	-	$ -	66	$ 101,005.74	48	$ 73,458.72	$ 27,547.02
		FIRE PROTECTION ITEMS	-	$ -		$ -		$ -	$ -
30	$ 2,645.01	3 WAY FIRE HYDRANT w/ APPURTENANCES (INCL. TEE, VALVE, HYDRANT, BRASS TAG, PIPE, & O	-	$ -	42	$ 111,090.42	35	$ 92,575.35	$ 18,515.07
31		6" FIRE SUPPRESSION SYSTEM CONNECTION (INCL. TEE, VALVE, PIPE, DISCONNECTION OF EXIST	-	$ -		$ -		$ -	$ -
		SERVICE ITEMS	-	$ -		$ -		$ -	$ -
32	$ 140.88	RESIDENTIAL SERVICE TAP (ALL SIZES) (INCL. OPEN CUT SERVICE TUBING, TAPPING SADDLE, COR	-	$ -	99	$ 13,947.12	103	$ 14,510.64	$ -
33	$ 543.88	COMMERCIAL SERVICE TAP (ALL SIZES) (INCL. OPEN CUT SERVICE TUBING, TAPPING SADDLE, CO	-	$ -	17	$ 9,245.96	8	$ 4,351.04	$ 4,894.92
34		SERVICE TUBING (BORED) (ALL SIZES)	-	$ -		$ -	2,754	$ -	$ -
35		RESIDENTIAL METER (INCL. METER, METER BOX, CITY FEES, ETC.)	-	$ -		$ -		$ -	$ -
		REMOVAL ITEMS	-	$ -		$ -		$ -	$ -
36		REMOVAL OF FIRE HYDRANT AND APPURTENANCES	-	$ -		$ -	1	$ -	$ -
37		ABANDONMENT OF EXISTING WATER LINES WITH FLOWABLE FILL	-	$ -		$ -		$ -	$ -
38		REMOVE AND RESET EXISTING STORM SEWER CULVERTS (ALL SIZES)	-	$ -		$ -		$ -	$ -
		MISCELLANEOUS CONSTRUCTION ITEMS	-	$ -		$ -		$ -	$ -
39		SELECT FILL MATERIAL (CLASS 9, GROUP C), LVM FOR GRAVEL DRIVEWAY REPAIR	-	$ -		$ -	242	$ -	$ -
40		ASPHALT PAVEMENT REPAIR (ALL DEPTHS)	-	$ -		$ -	15	$ -	$ -
41		CONCRETE PAVEMENT REPAIR (ALL DEPTHS)	-	$ -		$ -	73	$ -	$ -
42		CONCRETE CURB AND GUTTER REPAIR (MATCH EXISTING IN KIND)	-	$ -		$ -		$ -	$ -
		TOTALS		$ 618,819.30		$ 366,181.70		$ 893,487.15	$ 165,461.71

EJCDC No. C-620 (2002 Edition)

Prepared by the Engineers' Joint Contract Documents Committee and endorsed by the Associated General Contractors of America and the Construction Specifications Institute.

Stored Material Summary

Contractor's Application

For (contract):	Comprehensive Water Improvements Phase II	Application Number:	6
Application Period:	5/26/2018 TO 6/25/2018	Application Date:	5-Jul-18

A	B	C	D		E		F		G
			Stored Previously		Stored this Month		Incorporated In Work		
Pay Item No.	Unit Price	Materials Description	Quantity	Amount ($)	Quantity	Amount ($)	Quantity	Amount ($)	Materials Remaining in Storage ($) (D + E - F)
		Subtotal From Previous Page		618819.3		366181.7		893487.15	165461.71
43		CRUSHED AGGREGATE FOR ROAD REPAIR (SIZE 825)	-	$ -		$ -	239	$ -	$ -
44		TEMPORARY EROSION CONTROL	-	$ -		$ -		$ -	$ -
45		GRASSING	-	$ -		$ -		$ -	$ -
46		MAINTENANCE OF TRAFFIC	-	$ -		$ -	1	$ -	$ -
47		MOBILIZATION	-	$ -		$ -	1	$ -	$ -
			-	$ -		$ -		$ -	$ -
			-	$ -		$ -		$ -	$ -
			-	$ -		$ -		$ -	$ -
			-	$ -		$ -		$ -	$ -
			-	$ -		$ -		$ -	$ -
			-	$ -		$ -		$ -	$ -
			-	$ -		$ -		$ -	$ -
			-	$ -		$ -		$ -	$ -
			-	$ -		$ -		$ -	$ -
			-	$ -		$ -		$ -	$ -
			-	$ -		$ -		$ -	$ -
			-	$ -		$ -		$ -	$ -
			-	$ -		$ -		$ -	$ -
			-	$ -		$ -		$ -	$ -
			-	$ -		$ -		$ -	$ -
			-	$ -		$ -		$ -	$ -
			-	$ -		$ -		$ -	$ -
			-	$ -		$ -		$ -	$ -
			-	$ -		$ -		$ -	$ -
		TOTALS		$ 618,819.30		$ 366,181.70		$ 893,487.15	$ 165,461.71

EJCDC No. C-620 (2002 Edition)

Prepared by the Engineers' Joint Contract Documents Committee and endorsed by the Associated General Contractors of America and the Construction Specifications Institute.

Hattiesburg, Mississippi does hereby certify to Regions Bank, as trustee in respect to the referenced Bonds (the Trustee"):

(1) The amounts herein requisitioned to be paid to the above-designated payees are for the items or services hereinabove described.
(2) The items or services listed above for which payment is proposed to be made hereunder have not formed the basis for any payment heretofore made from the Series 2016 Project Fund Construction Account.
(3) Each of the items was reasonable and necessary in connection with the "Construction Project" being financed pursuant to the Loan Agreement dated as of August 18, 2016 (the "Loan Agreement").
(4) The payment herein authorized and approved is a proper charge against the Series 2016 Project Fund Construction Account as provided for in Section 3 of the Loan Agreement.
(5) The invoices or statements from the contractor, vendor or other payee or other document supporting the amounts requisitioned herein are on file with the City.

CITY OF HATTIESBURG, MISSISSIPPI

By: _____
Title: Mayor or City Clerk
(Authorized City Representative)

As Approved by:

Regions Commercial Equipment Finance, LLC
As Purchaser

_____
Authorized Officer

City of Hattiesburg, MS

200 Forrest St.
P.O. Box 1898
Hattiesburg, MS 39401

Master

File Number: 2018-656

File ID:	2018-656	**Type:**	Regular Agenda Item	**Status:**	Policy Agenda
Version:	1	**Reference:**		**In Control:**	City Council
Requester:	Lamar Rutland			**File Created:**	07/30/2018
Brief Title:	Authorize Mayor to execute in duplicate Airspace Agreement with Mississippi Department of Transportation (MDOT) for the County Club Road Pedestrian Bridge Project.			**Final Action:**	08/07/2018
				Minute Book Number:	MB 2018-192

Title:

Authorize Mayor to execute in duplicate Airspace Agreement with Mississippi Department of Transportation (MDOT) for the shared use of the right of way for the County Club Road Pedestrian Bridge Project (STP-8760-00(004) LPA / 107710-701000).

Notes:			
		Agenda Date:	08/07/2018
Indexes:		**Agenda Number:**	VI.-6
Sponsors:		**Enactment Date:**	
Attachments:	MDOT Airspace Agreement, MDOT Airspace Agreement-cover letter, Executed - MDOT Airspace Agreement Country Club Pedestrian Bridge Project	**Enactment Number:**	
Contact:		**Meeting Date:**	08/07/2018
Drafter:	Sharon Waits	**Effective Date:**	

History of Legislative File

Version:	Acting Body:	Date:	Action:	Sent To:	Due Date:	Return Date:	Result:
1	City Council	08/07/2018	Authorize				Pass

Action Text: A MOTION was made by Council Member Brown and seconded by Council Member George to Authorize Mayor to execute in duplicate Airspace Agreement with Mississippi Department of Transportation (MDOT) for the shared use of the right of way for the County Club Road Pedestrian Bridge Project (STP-8760-00(004) LPA / 107710-701000).

There being no discussion, the Motion received the affirmative vote of the Council as follows:

Yeas: 5 - George, Delgado, Carroll, Dryden and Brown

Nays: 0

Yea: 5 Council Member George
Council Member Delgado
Council President Carroll
Council Vice President Dryden
Council Member Brown

Text of Legislative File 2018-656

Title

Authorize Mayor to execute in duplicate Airspace Agreement with Mississippi Department of Transportation (MDOT) for the shared use of the right of way for the County Club Road Pedestrian Bridge Project (STP-8760-00(004) LPA / 107710-701000).

Summary

Authorize Mayor to execute in duplicate Airspace Agreement with Mississippi Department of Transportation (MDOT) for the County Club Road Pedestrian Bridge Project.

AGREEMENT TO USE AIRSPACE

This Agreement is entered into by and between the Mississippi Transportation Commission ("COMMISSION") a body Corporate of the State of Mississippi, acting by and through the duly authorized Executive Director of the Mississippi Department of Transportation ("MDOT"), the City of Hattiesburg, acting by and through its duly authorized mayor, and the Forrest County Board of Supervisors, Local Public Agency, "LPA" (hereinafter referred to as the "LPA") effective as of the date of latest execution shown below.

WHEREAS, The LPA desires to construct and maintain a pedestrian bridge within the right of way of U. S. Highway 49, in Hattiesburg, in accordance with, and pursuant to the plans and specifications known as Federal Aid Project STP-8760-00(004)LPA/107710-701000 that are attached hereto as Exhibit "A" and incorporated herein by reference, and also shown on the MDOT Encroachment Permit; and

WHEREAS, The LPA is willing to bear the costs of building and maintaining such facilities at no cost to the COMMISSION; and

WHEREAS, the execution of this contract and agreement has been duly authorized on behalf of the City of Hattiesburg, the LPA and the COMMISSION as set forth in COMMISSION Minute Book _____ at Page _____, authorizing the Executive Director of MDOT to execute this Agreement on behalf of the COMMISSION to grant the necessary license to the LPA; and

NOW, THEREFORE, for and in consideration of the benefits to public safety and the mutual covenants contained herein, and Ten Dollars ($10.00) cash in hand paid, the receipt and sufficiency of which are hereby acknowledged, the COMMISSION and the LPA hereby covenant and agree as follows:

1. Grant. Subject to the terms and conditions contained herein, the COMMISSION hereby authorizes the LPA to use and occupy the airspace (the "Airspace") described in the attached MND-004, Application For Permit To Locate Certain Facilities On or To Perform Work On State Highway Right of Way, and in the attached MND-005, hereto, as a revocable license.

2. TERM. The Agreement shall remain in force for an initial term of ten (10) years from the date of execution of this Agreement and shall be extended at the end of this initial term for a renewal term of ten (10) years, and for successive ten (10) year terms without further action of the parties; provided the COMMISSION does not elect to terminate this license by delivering notice to the LPA of the COMMISSION'S

election not to extend at least six (6) months prior to the end of a term. Notwithstanding anything in this paragraph, this Agreement shall terminate fifty (50) years from the date of this execution.

3. Use. The license granted by this agreement will be used exclusively for constructing, maintaining, and repairing, the pedestrian bridge facilities.

4. Responsibility for Developing. The LPA will have the sole responsibility for developing, constructing, operating, maintaining, repairing, replacing and removing the pedestrian bridge facilities and shall perform these functions at its sole cost.

5. Design. The design for the facility shall comply substantially with the plans attached hereto as MND-004, Application For Permit To Locate Certain Facilities On or To Perform Work On State Highway Right of Way, and Attached MND-005.

6. Changes in Use. The use and purpose set out in this Agreement shall be the exclusive use to which said license may apply. Any proposed change in the authorized use of the facilities shall require prior written approval of the COMMISSION.

7. Assignment. Subject to the terms and provisions herein, this Agreement and the license granted herein shall not be transferred, assigned or conveyed by the LPA to another party without prior written approval by the COMMISSION.

8. Abandonment. This Agreement will be revocable by the COMMISSION in the event that the Airspace ceases to be used or is abandoned for a period of time in excess of one hundred eighty (180) continuous days. Significant damage to the facilities caused by an act of God, terrorism, or by intentional or negligent acts of others, may be cause for the COMMISSION to waive its right to revoke the license granted for abandonment. The LPA shall not be considered to have ceased to use or abandoned the Airspace if the pedestrian facilities are being constructed, repaired, renovated or removed. The COMMISSION shall have no liability to the LPA for revoking this Agreement pursuant to the terms of this paragraph.

9. Noncompliance. The COMMISSION may revoke this Agreement if the LPA violates a material term of this Agreement and such violation is not corrected within thirty (30) days from the date of the LPA receipt of written notice of such violation. Further, in the event that this Agreement is revoked and the COMMISSION deems it necessary

to request the removal of the Facilities, the removal shall be accomplished by the LPA in a manner prescribed by the COMMISSION and at no cost to the COMMISSION. The COMMISSION shall have no liability to the LPA for revoking this Agreement pursuant to the terms of this paragraph.

10. Indemnity. The Mississippi Transportation Commission, the Mississippi Department of Transportation, the City of Hattiesburg and Forrest County are state agencies or governmental entities of the State of Mississippi, and the liability of each is covered by the Mississippi Tort Claims Act, codified in law in Title 11, Chapter 46, Sections 1 through 23, of the Mississippi Code of 1972, as annotated and amended. Each does hereby certify that it is a participant in the Mississippi Tort Claims Fund as set forth in Title 11, Chapter 46 of the Mississippi Code of 1972. The Tort Claims Fund provides protection for tort claims against state employees and agencies subject to terms and limitations established by law. Additionally, MDOT is self-insured for the purposes of workers' compensation claims. The contractor that will build the project, shall be required by contract to carry both general liability and workers' compensation insurance.

11. Access. Authorized representatives of the COMMISSION shall be entitled to inspect the Facilities at reasonable times to determine whether the LPA is fulfilling its obligations under this Agreement and applicable law. Authorized representatives of the COMMISSION shall also be entitled to enter the Facilities in connection with inspection, maintenance or reconstruction of Hwy 49 when necessary. However, nothing in this Agreement shall be construed as giving the COMMISSION the right to use the Facilities or the Airspace for any purpose other than entry as provided herein unless the LPA gives its prior written permission. The COMMISSION agrees to repair any damages to the Facilities caused by its authorized representatives.

12. Maintenance. The LPA shall maintain the Facilities in good condition, both as to safety and appearance. Such maintenance shall be accomplished in a manner so as to cause no unreasonable interference with the use of Hwy 49. If at any time the maintenance is anticipated to affect the safe use of the roadway, the LPA shall notify the District Engineer for MDOT in the manner set forth for notice in Paragraph 18 below. Said notice shall be given not less than seven (7) days prior to the anticipated maintenance. In the event the LPA fails in this maintenance obligation, the COMMISSION may enter the facilities to perform such maintenance work, including removal or closing of the facilities should it become hazardous to the traveling public after reasonable written notice to the LPA, with the cost of such maintenance to be borne by the LPA.

13. Civil Rights Assurances. As part of the consideration for this Agreement, the LPA covenants and agrees that except where authorized by federal law (1) no persons, on the grounds of race, color, or national origin, shall be excluded from participation in, be denied the benefit of, or be otherwise subjected to discrimination in the use of the Facilities; (2) that in connection with the construction of the Facilities and the furnishing of services thereto, no discrimination shall be practiced by the LPA in the selection of employees and contractors, by contractors in the selection and retention of subcontractors or suppliers ; (3) that such discrimination shall not be practiced against the public in their access to and use of the Facilities (but noting herein shall be construed as granting the public access to the Facilities); and (4) that the LPA will build the Facilities in compliance with all other applicable requirements imposed pursuant to Title 15, Code of Federal Regulations, Part 8, and as said Regulations may be amended. In the event of a breach of any of the above nondiscrimination covenants, the COMMISSION may terminate this Agreement; provided, however, that the COMMISSION shall give the LPA written notice of any perceived breach of these covenants, and if the LPA fails to cure or defend against such perceived breach within sixty (60) days after receipt of the written notice, then and only then will the COMMISSION have the right to terminate this Agreement pursuant to this paragraph.

14. Rent. No rent or any payment in any form (other than the Ten (10) Dollars referenced above) will be due by the LPA to the COMMISSION for the granting or continued existence of this airspace license, whether for the initial term or any renewal term, the benefits to be derived by the COMMISSION from the existence of the Facilities in the terms and conditions herein, being sufficient and satisfactory consideration to the COMMISSION. In the event that the COMMISSION finds it necessary to revoke the license and require the removal of the facilities, then the LPA may be charged a fair market rent, if it does not remove the facilities within a reasonable time.

15. Ownership and Exclusivity. The Facilities shall be and at all times remain the exclusive property of the LPA Subject to the inspection rights provided in Paragraph 11 herein, the civil rights assurance in Paragraph 13, and applicable law, the LPA or its successor in interest shall have sole and exclusive authority to regulate access to the Facilities and may restrict access if the LPA, in its discretion, determines that restriction of access is necessary or convenient to the safety or comfort of the LPA's patrons, visitors, employees, or staff. Except as allowed herein, COMMISSION will

not grant any person or other entity any rights in the Airspace during the term of this Agreement.

16. Removal by the LPA. The LPA, in its absolute discretion, may elect to remove the facilities. Such dismantling and removal shall be done at the LPA's sole cost and in cooperation with the COMMISSION to minimize any disruption to traffic on or damage to Hwy 49. Any such removal will be in accordance with plans and specifications approved by the COMMISSION, and as permitted by Permit Application. If the LPA chooses to remove the facilities before such time as the facilities have become obsolescent, then the COMMISSION may seek reimbursement pursuant to a separate agreement between the LPA and the COMMISSION.

17. Improvements or Widening of Interstate Highway 49. If COMMISSION improves or widens the portion of Highway 49 that conflicts with the above the facilities so that modification or removal is required to accommodate such work, then the LPA, at its sole expense, will modify or remove the conflicting facilities.

18. Notices. It is understood by both parties hereto that the Mississippi Transportation Commission executes all its orders and directives through the Executive Director of the Mississippi Department of Transportation; and

    Unless otherwise notified in writing to the contrary, the appropriate contact person for the State of Mississippi for the matters pertaining to this Contract shall be:

    For Contractual Matters
    Mississippi Transportation Commission:
    C/O Executive Director, Mississippi Department of Transportation
    401 North West Street
    Post Office Box 1850
    Jackson, MS 39215-1850
    Telephone 601-359-7002 Facsimile 601-359-7050
    Or
    Technical Matters:
    Mississippi Transportation Commission
    C/O MDOT District Engineer, District 6
    Post Office Box 551
    Hattiesburg, MS 39403-0551
    Telephone 601-544-6511 Facsimile 601-544-0227

Unless otherwise notified in writing to the contrary, the appropriate contact person for the LPA shall be:

For Contractual Matters
Forrest County Board of Supervisors:
C/O Board President
P.O. Box 1310
Hattiesburg, MS 39403-1310
Telephone 601-545-6000 Facsimile 601-545-6095

Or

For Technical Matters:
Forrest County Board of Supervisors:
C/O Road Manager
P.O. Box 1310
Hattiesburg, MS 39403-1310
Telephone 601-584-6072 Facsimile 601-545-6095

All notices given hereunder shall be by U.S. Certified Mail, return receipt requested, or by facsimile and shall be effective only upon receipt by the addressee at the above addresses or telephone numbers.

19. Permit. The LPA's license to build, maintain, reconstruct or remove the Facilities is subject to the LPA obtaining appropriate approvals and the permits from the COMMISSION, all of which will become a part of this Agreement.

20. Additional Agreement. The Parties hereto agree to execute any additional and further documents necessary to accomplish the expressed purposes of this Agreement.

21. Effective Date. This Agreement shall be effective upon the last date of the signature of either party hereto.

22. Severability. This Agreement is intended to be in accordance with all relevant and applicable laws. If any provision hereof shall for any reason be invalid or unenforceable, the remainder of the Agreement shall not be affected thereby, but rather shall be enforced to the greatest extent permitted by law.

23. Counterparts. This Agreement may be executed in any number of counterparts, each of which shall be an original but all of which shall constitute but one instrument.

24. Headings. All paragraph headings in this Agreement are inserted for convenience of reference only and shall in no way alter, modify or define the text of the Agreement.

25. License for Construction. In addition to the license previously granted herein, the COMMISSION also grants to the LPA the right to enter upon and use Hwy 49, together with the rights to use COMMISSION's right-of-way and the Airspace around the right-of-way of Hwy 49 and all other appurtenant rights, to the extent necessary to install, construct, repair and maintain the Facilities. These licenses shall exist from the effective date of this Agreement and subsequent to the approval of the required permits and shall be nonexclusive. The LPA agrees to give the COMMISSION not less than five (5) days notice prior to its use of these licenses and to cooperate with the COMMISSION to minimize disruption of traffic on Hwy 49 during the installation and construction of the Facilities. The LPA agrees to repair any damage to the property subject to this license caused by the installation and construction of the Facilities and to restore such property to a condition not worse than the condition in which it existed immediately prior to the installation and construction of the Facilities.

26. Recordation. The parties hereto agree that this instrument may be recorded.

27. Addendum. An addendum containing additional provisions is attached to and made a part of this agreement.

28. Hattiesburg. The City of Hattiesburg acknowledges that this project will be constructed within the city limits of Hattiesburg, and is a signatory to this agreement for that sole and limited purpose.

(Remainder of page intentionally blank)

WITNESS THIS SIGNATURE in execution hereof as the duly authorized representative of the MISSISSIPPI TRANSPORTATION COMMISSION, on the ____day of _____, 20___.

MISSISSIPPI TRANSPORTATION COMMISSION
ACTING BY AND THROUGH THE DULY
AUTHORIZED EXECUTIVE DIRECTOR OF THE
MISSISSIPPI DEPARTMENT OF TRANSPORTATION

_____

Melinda L. McGrath, P.E.
EXECUTIVE DIRECTOR

Minute Book _____ Page _____

WITNESS THIS MY SIGNATURE in execution hereof as the duly authorized representative of the LPA on the 19th day of July, 2018.

Forrest County Board of Supervisors

BY: _____

David Hogan, Board President

CHANCERY COURT FORREST COUNTY, MS

ATTEST:

BY: _____

WITNESS THIS MY SIGNATURE in execution hereof as the duly authorized representative of the City of Hattiesburg, on the 7th day of August, 2018.

City of Hattiesburg

BY: _____
Toby Barker, Mayor

ATTEST:

BY: _____
Kermas Eaton, City Clerk

Tom King
Southern District Commissioner
Kelly R. Castleberry
District 6 Engineer

P. O. Box 551
Hattiesburg, MS 39403-0551
Telephone (601) 544-6511
FAX (601) 544-0227

MDOT
MISSISSIPPI DEPARTMENT OF TRANSPORTATION

Melinda L. McGrath
Executive Director

James A. Williams, III
Deputy Executive Director/Chief Engineer

Lisa M. Hancock
Deputy Executive Director/Administration

GoMDOT.com

16499-B Highway 49, Saucier, MS 39574-9740
July 2, 2018

Mr. David Hogan
Board President
Forrest County Board of Supervisors
PO Box 1310
Hattiesburg, Mississippi 39403

RE: Airspace Agreement
Country Club Road Pedestrian Bridge
STP-8760-00(004)LPA / 107710-701000

Dear Mr. Hogan,

Attached are the duplicate copies of the Airspace Agreement for the above referenced project for your review and processing. The agreement outlines responsibilities as required by the MDOT for shared use of the right of way. Please execute the agreement in duplicate and return with board minutes signifying approval. Please mail to:

Mississippi Department of Transportation
Attn: David Seyfarth
16499-B Highway 49
Saucier, MS 39574-9740

Should you need additional information, contact my office at 228-832-0682.

Sincerely,

Chuck Starita

Chuck Starita, PE
Asst. District LPA Engineer

cc: Project File 16-10 w/ attachments

AGREEMENT TO USE AIRSPACE

This Agreement is entered into by and between the Mississippi Transportation Commission ("COMMISSION") a body Corporate of the State of Mississippi, acting by and through the duly authorized Executive Director of the Mississippi Department of Transportation ("MDOT"), the City of Hattiesburg, acting by and through its duly authorized mayor, and the Forrest County Board of Supervisors, Local Public Agency, "LPA" (hereinafter referred to as the "LPA") effective as of the date of latest execution shown below.

WHEREAS, The LPA desires to construct and maintain a pedestrian bridge within the right of way of U. S. Highway 49, in Hattiesburg, in accordance with, and pursuant to the plans and specifications known as Federal Aid Project STP-8760-00(004)LPA/107710-701000 that are attached hereto as Exhibit "A" and incorporated herein by reference, and also shown on the MDOT Encroachment Permit; and

WHEREAS, The LPA is willing to bear the costs of building and maintaining such facilities at no cost to the COMMISSION; and

WHEREAS, the execution of this contract and agreement has been duly authorized on behalf of the City of Hattiesburg, the LPA and the COMMISSION as set forth in COMMISSION Minute Book _____ at Page _____, authorizing the Executive Director of MDOT to execute this Agreement on behalf of the COMMISSION to grant the necessary license to the LPA; and

NOW, THEREFORE, for and in consideration of the benefits to public safety and the mutual covenants contained herein, and Ten Dollars ($10.00) cash in hand paid, the receipt and sufficiency of which are hereby acknowledged, the COMMISSION and the LPA hereby covenant and agree as follows:

1. Grant. Subject to the terms and conditions contained herein, the COMMISSION hereby authorizes the LPA to use and occupy the airspace (the "Airspace") described in the attached MND-004, Application For Permit To Locate Certain Facilities On or To Perform Work On State Highway Right of Way, and in the attached MND-005, hereto, as a revocable license.

2. TERM. The Agreement shall remain in force for an initial term of ten (10) years from the date of execution of this Agreement and shall be extended at the end of this initial term for a renewal term of ten (10) years, and for successive ten (10) year terms without further action of the parties; provided the COMMISSION does not elect to terminate this license by delivering notice to the LPA of the COMMISSION'S

election not to extend at least six (6) months prior to the end of a term. Notwithstanding anything in this paragraph, this Agreement shall terminate fifty (50) years from the date of this execution.

3. Use. The license granted by this agreement will be used exclusively for constructing, maintaining, and repairing, the pedestrian bridge facilities.

4. Responsibility for Developing. The LPA will have the sole responsibility for developing, constructing, operating, maintaining, repairing, replacing and removing the pedestrian bridge facilities and shall perform these functions at its sole cost.

5. Design. The design for the facility shall comply substantially with the plans attached hereto as MND-004, Application For Permit To Locate Certain Facilities On or To Perform Work On State Highway Right of Way, and Attached MND-005.

6. Changes in Use. The use and purpose set out in this Agreement shall be the exclusive use to which said license may apply. Any proposed change in the authorized use of the facilities shall require prior written approval of the COMMISSION.

7. Assignment. Subject to the terms and provisions herein, this Agreement and the license granted herein shall not be transferred, assigned or conveyed by the LPA to another party without prior written approval by the COMMISSION.

8. Abandonment. This Agreement will be revocable by the COMMISSION in the event that the Airspace ceases to be used or is abandoned for a period of time in excess of one hundred eighty (180) continuous days. Significant damage to the facilities caused by an act of God, terrorism, or by intentional or negligent acts of others, may be cause for the COMMISSION to waive its right to revoke the license granted for abandonment. The LPA shall not be considered to have ceased to use or abandoned the Airspace if the pedestrian facilities are being constructed, repaired, renovated or removed. The COMMISSION shall have no liability to the LPA for revoking this Agreement pursuant to the terms of this paragraph.

9. Noncompliance. The COMMISSION may revoke this Agreement if the LPA violates a material term of this Agreement and such violation is not corrected within thirty (30) days from the date of the LPA receipt of written notice of such violation. Further, in the event that this Agreement is revoked and the COMMISSION deems it necessary

to request the removal of the Facilities, the removal shall be accomplished by the LPA in a manner prescribed by the COMMISSION and at no cost to the COMMISSION. The COMMISSION shall have no liability to the LPA for revoking this Agreement pursuant to the terms of this paragraph.

10. Indemnity. The Mississippi Transportation Commission, the Mississippi Department of Transportation, the City of Hattiesburg and Forrest County are state agencies or governmental entities of the State of Mississippi, and the liability of each is covered by the Mississippi Tort Claims Act, codified in law in Title 11, Chapter 46, Sections 1 through 23, of the Mississippi Code of 1972, as annotated and amended. Each does hereby certify that it is a participant in the Mississippi Tort Claims Fund as set forth in Title 11, Chapter 46 of the Mississippi Code of 1972. The Tort Claims Fund provides protection for tort claims against state employees and agencies subject to terms and limitations established by law. Additionally, MDOT is self-insured for the purposes of workers' compensation claims. The contractor that will build the project, shall be required by contract to carry both general liability and workers' compensation insurance.

11. Access. Authorized representatives of the COMMISSION shall be entitled to inspect the Facilities at reasonable times to determine whether the LPA is fulfilling its obligations under this Agreement and applicable law. Authorized representatives of the COMMISSION shall also be entitled to enter the Facilities in connection with inspection, maintenance or reconstruction of Hwy 49 when necessary. However, nothing in this Agreement shall be construed as giving the COMMISSION the right to use the Facilities or the Airspace for any purpose other than entry as provided herein unless the LPA gives its prior written permission. The COMMISSION agrees to repair any damages to the Facilities caused by its authorized representatives.

12. Maintenance. The LPA shall maintain the Facilities in good condition, both as to safety and appearance. Such maintenance shall be accomplished in a manner so as to cause no unreasonable interference with the use of Hwy 49. If at any time the maintenance is anticipated to affect the safe use of the roadway, the LPA shall notify the District Engineer for MDOT in the manner set forth for notice in Paragraph 18 below. Said notice shall be given not less than seven (7) days prior to the anticipated maintenance. In the event the LPA fails in this maintenance obligation, the COMMISSION may enter the facilities to perform such maintenance work, including removal or closing of the facilities should it become hazardous to the traveling public after reasonable written notice to the LPA, with the cost of such maintenance to be borne by the LPA.

13. Civil Rights Assurances. As part of the consideration for this Agreement, the LPA covenants and agrees that except where authorized by federal law (1) no persons, on the grounds of race, color, or national origin, shall be excluded from participation in, be denied the benefit of, or be otherwise subjected to discrimination in the use of the Facilities; (2) that in connection with the construction of the Facilities and the furnishing of services thereto, no discrimination shall be practiced by the LPA in the selection of employees and contractors, by contractors in the selection and retention of subcontractors or suppliers ; (3) that such discrimination shall not be practiced against the public in their access to and use of the Facilities (but noting herein shall be construed as granting the public access to the Facilities); and (4) that the LPA will build the Facilities in compliance with all other applicable requirements imposed pursuant to Title 15, Code of Federal Regulations, Part 8, and as said Regulations may be amended. In the event of a breach of any of the above nondiscrimination covenants, the COMMISSION may terminate this Agreement; provided, however, that the COMMISSION shall give the LPA written notice of any perceived breach of these covenants, and if the LPA fails to cure or defend against such perceived breach within sixty (60) days after receipt of the written notice, then and only then will the COMMISSION have the right to terminate this Agreement pursuant to this paragraph.

14. Rent. No rent or any payment in any form (other than the Ten (10) Dollars referenced above) will be due by the LPA to the COMMISSION for the granting or continued existence of this airspace license, whether for the initial term or any renewal term, the benefits to be derived by the COMMISSION from the existence of the Facilities in the terms and conditions herein, being sufficient and satisfactory consideration to the COMMISSION. In the event that the COMMISSION finds it necessary to revoke the license and require the removal of the facilities, then the LPA may be charged a fair market rent, if it does not remove the facilities within a reasonable time.

15. Ownership and Exclusivity. The Facilities shall be and at all times remain the exclusive property of the LPA Subject to the inspection rights provided in Paragraph 11 herein, the civil rights assurance in Paragraph 13, and applicable law, the LPA or its successor in interest shall have sole and exclusive authority to regulate access to the Facilities and may restrict access if the LPA, in its discretion, determines that restriction of access is necessary or convenient to the safety or comfort of the LPA's patrons, visitors, employees, or staff. Except as allowed herein, COMMISSION will

not grant any person or other entity any rights in the Airspace during the term of this Agreement.

16. Removal by the LPA. The LPA, in its absolute discretion, may elect to remove the facilities. Such dismantling and removal shall be done at the LPA's sole cost and in cooperation with the COMMISSION to minimize any disruption to traffic on or damage to Hwy 49. Any such removal will be in accordance with plans and specifications approved by the COMMISSION, and as permitted by Permit Application. If the LPA chooses to remove the facilities before such time as the facilities have become obsolescent, then the COMMISSION may seek reimbursement pursuant to a separate agreement between the LPA and the COMMISSION.

17. Improvements or Widening of Interstate Highway 49. If COMMISSION improves or widens the portion of Highway 49 that conflicts with the above the facilities so that modification or removal is required to accommodate such work, then the LPA, at its sole expense, will modify or remove the conflicting facilities.

18. Notices. It is understood by both parties hereto that the Mississippi Transportation Commission executes all its orders and directives through the Executive Director of the Mississippi Department of Transportation; and

    Unless otherwise notified in writing to the contrary, the appropriate contact person for the State of Mississippi for the matters pertaining to this Contract shall be:

    For Contractual Matters
    Mississippi Transportation Commission:
    C/O Executive Director, Mississippi Department of Transportation
    401 North West Street
    Post Office Box 1850
    Jackson, MS 39215-1850
    Telephone 601-359-7002 Facsimile 601-359-7050
    Or
    Technical Matters:
    Mississippi Transportation Commission
    C/O MDOT District Engineer, District 6
    Post Office Box 551
    Hattiesburg, MS 39403-0551
    Telephone 601-544-6511 Facsimile 601-544-0227

Unless otherwise notified in writing to the contrary, the appropriate contact person for the LPA shall be:

For Contractual Matters
Forrest County Board of Supervisors:
C/O Board President
P.O. Box 1310
Hattiesburg, MS 39403-1310
Telephone 601-545-6000 Facsimile 601-545-6095

Or

For Technical Matters:
Forrest County Board of Supervisors:
C/O Road Manager
P.O. Box 1310
Hattiesburg, MS 39403-1310
Telephone 601-584-6072 Facsimile 601-545-6095

All notices given hereunder shall be by U.S. Certified Mail, return receipt requested, or by facsimile and shall be effective only upon receipt by the addressee at the above addresses or telephone numbers.

19. Permit. The LPA's license to build, maintain, reconstruct or remove the Facilities is subject to the LPA obtaining appropriate approvals and the permits from the COMMISSION, all of which will become a part of this Agreement.

20. Additional Agreement. The Parties hereto agree to execute any additional and further documents necessary to accomplish the expressed purposes of this Agreement.

21. Effective Date. This Agreement shall be effective upon the last date of the signature of either party hereto.

22. Severability. This Agreement is intended to be in accordance with all relevant and applicable laws. If any provision hereof shall for any reason be invalid or unenforceable, the remainder of the Agreement shall not be affected thereby, but rather shall be enforced to the greatest extent permitted by law.

23. Counterparts. This Agreement may be executed in any number of counterparts, each of which shall be an original but all of which shall constitute but one instrument.

24. Headings. All paragraph headings in this Agreement are inserted for convenience of reference only and shall in no way alter, modify or define the text of the Agreement.

25. License for Construction. In addition to the license previously granted herein, the COMMISSION also grants to the LPA the right to enter upon and use Hwy 49, together with the rights to use COMMISSION's right-of-way and the Airspace around the right-of-way of Hwy 49 and all other appurtenant rights, to the extent necessary to install, construct, repair and maintain the Facilities. These licenses shall exist from the effective date of this Agreement and subsequent to the approval of the required permits and shall be nonexclusive. The LPA agrees to give the COMMISSION not less than five (5) days notice prior to its use of these licenses and to cooperate with the COMMISSION to minimize disruption of traffic on Hwy 49 during the installation and construction of the Facilities. The LPA agrees to repair any damage to the property subject to this license caused by the installation and construction of the Facilities and to restore such property to a condition not worse than the condition in which it existed immediately prior to the installation and construction of the Facilities.

26. Recordation. The parties hereto agree that this instrument may be recorded.

27. Addendum. An addendum containing additional provisions is attached to and made a part of this agreement.

28. Hattiesburg. The City of Hattiesburg acknowledges that this project will be constructed within the city limits of Hattiesburg, and is a signatory to this agreement for that sole and limited purpose.

(Remainder of page intentionally blank)

WITNESS THIS SIGNATURE in execution hereof as the duly authorized representative of the MISSISSIPPI TRANSPORTATION COMMISSION, on the 17 day of Sept., 2018.

MISSISSIPPI TRANSPORTATION COMMISSION
ACTING BY AND THROUGH THE DULY
AUTHORIZED EXECUTIVE DIRECTOR OF THE
MISSISSIPPI DEPARTMENT OF TRANSPORTATION

Melinda L. McGrath, P.E.
EXECUTIVE DIRECTOR

Minute Book 21 Page 922

WITNESS THIS MY SIGNATURE in execution hereof as the duly authorized representative of the LPA on the 19th day of July, 2018.

Forrest County Board of Supervisors

BY: _____

David Hogan, Board President

CHANCERY COURT FORREST COUNTY MS

ATTEST:

BY: _____

WITNESS THIS MY SIGNATURE in execution hereof as the duly authorized representative of the City of Hattiesburg, on the 7th day of August, 2018.

City of Hattiesburg

BY: _____

ATTEST:

BY: _____

City of Hattiesburg, MS

200 Forrest St.
P.O. Box 1898
Hattiesburg, MS 39401

Master

File Number: 2018-654

File ID:	2018-654	**Type:**	Regular Agenda Item	**Status:**	Policy Agenda
Version:	1	**Reference:**		**In Control:**	City Council
Requester:	Lamar Rutland			**File Created:**	07/30/2018
Brief Title:	MOU with United Way for Diaper Bank			**Final Action:**	08/07/2018
				Minute Book Number:	MB 2018-192

Title:

Authorize Mayor to execute in duplicate a Memorandum of Understanding (MOU) with The United Way of Southeast Mississippi to establish agreed upon conditions under which the United Way may lease property from the City for the establishment of the Pine Belt Diaper Bank ("Diaper Bank").

Notes:

		Agenda Date:	08/07/2018
Indexes:		**Agenda Number:**	VI.-7
Sponsors:		**Enactment Date:**	
Attachments:	Diaper Bank MOU - UW edits - CLEAN, Executed - MOU with United Way of Southeast Mississippi for establishment of Pine Belt Diaper Bank	**Enactment Number:**	
Contact:		**Meeting Date:**	08/07/2018
Drafter:	Sharon Waits	**Effective Date:**	

History of Legislative File

Version:	Acting Body:	Date:	Action:	Sent To:	Due Date:	Return Date:	Result:
1	City Council	08/07/2018	Authorize				Pass

Action Text: A MOTION was made by Council Member George and seconded by Council Vice President Dryden to Authorize Mayor to execute in duplicate a Memorandum of Understanding (MOU) with The United Way of Southeast Mississippi to establish agreed upon conditions under which the United Way may lease property from the City for the establishment of the Pine Belt Diaper Bank ("Diaper Bank").

There being no discussion, the Motion received the affirmative vote of the Council as follows:

Yeas: 5 - George, Delgado, Carroll, Dryden and Brown

Nays: 0

Yea: 5 Council Member George
Council Member Delgado
Council President Carroll
Council Vice President Dryden
Council Member Brown

Text of Legislative File 2018-654

Title

Authorize Mayor to execute in duplicate a Memorandum of Understanding (MOU) with The United Way of Southeast Mississippi to establish agreed upon conditions under which the United Way may lease property from the City for the establishment of the Pine Belt Diaper Bank ("Diaper Bank").

Summary

Authorize Mayor to execute MOU with The United Way of Southeast Mississippi to establish agreed upon conditions under which the United Way may lease property from the City for the establishment of the Pine Belt Diaper Bank.

Budget Information

Budget Neutral

Memorandum of Understanding
for Pine Belt Diaper Bank

PARTIES

This agreement is made between **The United Way of Southeast Mississippi**, a non-profit Mississippi corporation (herein referred to as "United Way") located in Hattiesburg, Mississippi and **THE CITY OF HATTIESBURG** in **FORREST COUNTY, MS** (hereinafter referred to as the "City") for the purpose of establishing the agreed upon conditions under which United Way may lease property owned by the City of Hattiesburg for the establishment of the Pine Belt Diaper Bank (the "Diaper Bank").

STATUTORY AUTHORITY

Pursuant to *Miss. Code Ann.* § 21-19-65 (Supp. 2017), the City has the power "to expend monies from the municipal general fund to match any other funds for the purpose of supporting social and community service programs…." The Attorney General of Mississippi has opined that a municipality may make an in-kind contribution for such purpose (which would include making space available in a City-owned facility in lieu of a cash contribution). Opinion to Hicks, November 3, 1993, Op. #93-0641. Based upon the social and community value of the Diaper Bank to the community and the estimated financial benefit to the community from the existence of the program, the City and United Way have determined in good faith that the fair market value of the diapers distributed through the diaper bank equals or exceeds the fair market rental value of the space

PERIOD OF AGREEMENT

This agreement shall be in force and effect from the **7th** day of **August, 2018** and shall continue in effect from year to year unless either party gives the other party at least six (6) months' written notice.

STATEMENT OF WORK

WHEREAS, the United Way has announced its intentions to establish a Diaper Bank. The United Way is looking to establish a central location where it can house diapers so that local agencies such as Edwards Street Mission and other nonprofits that follow Mississippi Food Bank Network guidelines can come and pickup Diapers. The intention is for the location to act solely as a warehouse and no diapers will be handed out to the public at this location.

The United Way will:

- Staff the Diaper Bank and provide diapers for the Diaper Bank. The fair market value of the diapers shall be at least equal to the fair rental value of the space in the building owned by the City at 2100 4th Street.
- Establish drop off locations and coordinate funding of the Diaper Bank
- Coordinate times for drop off and collection of diapers

The City of Hattiesburg will

- Allow the United Way to utilize space in the existing building at 2100 4th Street for the distribution of diapers. A drawing of the space, if applicable, shall be attached hereto.
- Provide upgrades to the existing space to meet the needs of the Diaper Bank.

CONDITIONS FOR TERMINATION

The United Way or the City may terminate this agreement at any time for its convenience by giving the other party (six) 6 months' written notice.

RESPONSIBILITIES FOR CLAIMS AND LIABILITY

To the extent permitted by law, United Way and the City agree that neither party nor their agents, employees, contractors or subcontractors, will be held liable for any claim, loss, damage, cost, charge or expenditure arising out of any negligent act, actions, neglect or omission caused solely by the other party, its agents, employees, contractors or subcontractors.

OTHER PROVISIONS

This Agreement is the entire agreement of the parties relating to the subject matter hereof, and supersedes all prior and contemporaneous negotiations, correspondence, understandings, and agreements of the parties relating to the subject matter hereof. It may be amended only by an agreement in writing and signed by both parties.

This MOU shall be interpreted and enforced in accordance with the laws of the State of Mississippi. Both parties hereto represent that they have authority to enter into this Memorandum of Understanding. So agreed this the **7th** day of **August, 2018.**

ACCEPTED FOR: City of Hattiesburg

_____ _____

TOBY BARKER
MAYOR, CITY OF HATTIESBURG

Date

ACCEPTED FOR:
United Way of South East Mississippi

_____ _____

Tracie Fowler
President/CEO

Date

Memorandum of Understanding
for Pine Belt Diaper Bank

PARTIES

This agreement is made between **The United Way of Southeast Mississippi**, a non-profit Mississippi corporation (herein referred to as "United Way") located in Hattiesburg, Mississippi and **THE CITY OF HATTIESBURG** in **FORREST COUNTY, MS** (hereinafter referred to as the "City") for the purpose of establishing the agreed upon conditions under which United Way may lease property owned by the City of Hattiesburg for the establishment of the Pine Belt Diaper Bank (the "Diaper Bank").

STATUTORY AUTHORITY

Pursuant to *Miss. Code Ann.* § 21-19-65 (Supp. 2017), the City has the power "to expend monies from the municipal general fund to match any other funds for the purpose of supporting social and community service programs...." The Attorney General of Mississippi has opined that a municipality may make an in-kind contribution for such purpose (which would include making space available in a City-owned facility in lieu of a cash contribution). Opinion to Hicks, November 3, 1993, Op. #93-0641. Based upon the social and community value of the Diaper Bank to the community and the estimated financial benefit to the community from the existence of the program, the City and United Way have determined in good faith that the fair market value of the diapers distributed through the diaper bank equals or exceeds the fair market rental value of the space

PERIOD OF AGREEMENT

This agreement shall be in force and effect from the **7th** day of **August, 2018** and shall continue in effect from year to year unless either party gives the other party at least six (6) months' written notice.

STATEMENT OF WORK

WHEREAS, the United Way has announced its intentions to establish a Diaper Bank. The United Way is looking to establish a central location where it can house diapers so that local agencies such as Edwards Street Mission and other nonprofits that follow Mississippi Food Bank Network guidelines can come and pickup Diapers. The intention is for the location to act solely as a warehouse and no diapers will be handed out to the public at this location.

The United Way will:

- Staff the Diaper Bank and provide diapers for the Diaper Bank. The fair market value of the diapers shall be at least equal to the fair rental value of the space in the building owned by the City at 2100 4th Street.
- Establish drop off locations and coordinate funding of the Diaper Bank
- Coordinate times for drop off and collection of diapers

The City of Hattiesburg will

- Allow the United Way to utilize space in the existing building at 2100 4th Street for the distribution of diapers. A drawing of the space, if applicable, shall be attached hereto.
- Provide upgrades to the existing space to meet the needs of the Diaper Bank.

CONDITIONS FOR TERMINATION

The United Way or the City may terminate this agreement at any time for its convenience by giving the other party (six) 6 months' written notice.

RESPONSIBILITIES FOR CLAIMS AND LIABILITY

To the extent permitted by law, United Way and the City agree that neither party nor their agents, employees, contractors or subcontractors, will be held liable for any claim, loss, damage, cost, charge or expenditure arising out of any negligent act, actions, neglect or omission caused solely by the other party, its agents, employees, contractors or subcontractors.

OTHER PROVISIONS

This Agreement is the entire agreement of the parties relating to the subject matter hereof, and supersedes all prior and contemporaneous negotiations, correspondence, understandings, and agreements of the parties relating to the subject matter hereof. It may be amended only by an agreement in writing and signed by both parties.

This MOU shall be interpreted and enforced in accordance with the laws of the State of Mississippi. Both parties hereto represent that they have authority to enter into this Memorandum of Understanding. So agreed this the **7th** day of **August, 2018.**

ACCEPTED FOR: City of Hattiesburg

TOBY BARKER
MAYOR, CITY OF HATTIESBURG

8-7-18
Date

ACCEPTED FOR:
United Way of South East Mississippi

Tracie Fowler
President/CEO

Date

City of Hattiesburg, MS

200 Forrest St.
P.O. Box 1898
Hattiesburg, MS 39401

Master

File Number: 2018-647

File ID:	2018-647	**Type:**	Regular Agenda Item	**Status:**	Policy Agenda
Version:	1	**Reference:**		**In Control:**	City Council
Requester:	Lamar Rutland			**File Created:**	07/30/2018
Brief Title:	Authorize Mayor to execute utility easement (in duplicate) with Pearl River Valley EPA to provide electrical service to lift station on Lamar Boulevard.			**Final Action:**	08/07/2018
				Minute Book Number:	MB 2018-192-193

Title:

Authorize Mayor to execute Right of Way Easement (in duplicate) with Pearl River Valley EPA to provide electrical service to lift station on Lamar Boulevard.

Notes:			
		Agenda Date:	08/07/2018
Indexes:		**Agenda Number:**	VI.-8
Sponsors:		**Enactment Date:**	
Attachments:	Lift Station Easement with Pearl River Valley, Executed - Lift Station Easement with Pearl River Valley	**Enactment Number:**	
Contact:		**Meeting Date:**	08/07/2018
Drafter:	Sharon Waits	**Effective Date:**	

History of Legislative File

Version:	Acting Body:	Date:	Action:	Sent To:	Due Date:	Return Date:	Result:
1	City Council	08/07/2018	Authorize				Pass

Action Text: A MOTION was made by Council Member George and seconded by Council Member Brown to Authorize Mayor to execute Right of Way Easement (in duplicate) with Pearl River Valley EPA to provide electrical service to lift station on Lamar Boulevard.

There being no discussion, the Motion received the affirmative vote of the Council as follows:

Yeas: 5 - George, Delgado, Carroll, Dryden and Brown

Nays: 0

Yea: 5
Council Member George
Council Member Delgado
Council President Carroll
Council Vice President Dryden
Council Member Brown

Text of Legislative File 2018-647

Title

Authorize Mayor to execute Right of Way Easement (in duplicate) with Pearl River Valley EPA to provide electrical service to lift station on Lamar Boulevard.

Summary

Authorize Mayor to execute utility easement (in duplicate) with Pearl River Valley EPA to provide electrical service to lift station on Lamar Boulevard.

Budget Information

075695.7220.67

FOR CHANCERY CLERK USE ONLY					
County	Section	Township	Range	Book	Page
Prepared by & Return to:	Pearl River Valley Electric Power Association, P. O. Box 1217, Columbia, MS 39429				

RIGHT-OF-WAY EASEMENT

STATE OF MISSISSIPPI MSEP _____ JOB NO 36500

COUNTY OF LAMAR PRVEPA 24.1std (Revised 1-2-2015) MAP NO V5-28-9A

THIS EASEMENT, made on date shown below by and between **Pearl River Valley Electric Power Association whose address is 1422 Highway 13 North, Columbia, Mississippi, 39429-1217, phone number 601-736-2666**, (hereinafter the "Association") and CITY OF HATTIESBURG, phone 601-545-4682, address PO BOX 1898 HATTIESBURG MS 39403, (hereinafter the "Grantor").

WHEREAS, in accordance with Association's By-Laws, Section 1.09, and Service Rules and Regulations, Section V.2, a member of Association shall execute, deliver, and grant to Association a right-of-way easement for furnishing electric service to member and/or other members of Association;

WHEREAS, Grantor is owner, lessee, and/or authorized agent of certain lands (hereinafter "Grantor's land") situated in A PART OF THE NW 1/4 OF SECTION 15, T4N, R14W as more particularly described in instruments on file and of record in the Chancery Clerk's office of said county;

WHEREAS, Grantor hereby gives his consent and approval to Association for the creation of a right-of-way easement over, across, and under Grantor's land, HAVING A POINT OF BEGINNING ON THE WEST PROPERTY LINE APPROXIMATELY 10 FEET EAST OF LAMAR BLVD THEN RUN EAST FOR 32 FEET;

NOW THEREFORE, Grantor hereby grants unto Association, its successors, and assigns, a perpetual utility easement in, upon, over, across, along, and under portions of Grantor's land, (hereinafter "Easement Area"), for the installation and maintenance of electric distribution power lines, wires, equipment, and Association's communication cables (hereinafter "facilities"). Facilities installed hereunder shall remain the property of Association and Association shall be solely responsible for the construction, operation, and maintenance of facilities within Easement Area. Grantor also agrees to license, permit, or otherwise agree to the joint use (JU) or occupancy of a JU pole by any other association or corporation having a current joint use pole agreement with Association for communication or television purposes. (Grantor may strike JU sentence only and initial_____)

IN FURTHER consideration of the promises, mutual covenants, and agreements contained herein, Association and Grantor agree as follows:

1. **Location and Width of Easement Area:** Location of Easement Area on Grantor's land shall be determined by the actual centerline placement of facilities by Association during the initial construction of facilities, and/or by description thereof by exhibit attached hereto. Width of Easement Area shall be determined by "Facility Type" described below and measured from centerline of facilities.

Facility Type (width on either side of power line centerline with total width shown in parenthesis)	**Single Phase**	**Three Phase**
a. Anchors; Guys; & Overhead Services, 600 volts or less	5 (10) ft.	5 (10) ft.
b. Facilities along, beside, adjacent to Roads, Streets, Highways, Lanes, Alleys, & Property Lines	25 (50) ft.	25 (50) ft.
c. Facilities within landscaped, maintained yards & 100 ft. from Residence & Business w/HVAC	10 (20) ft.	15 (30) ft.
d. All Other Overhead Facilities	15 (30) ft.	25 (50) ft.
e. All Underground Facilities	7.5 (15) ft.	7.5 (15) ft.

2. **Ingress and Egress:** Association shall have free ingress and egress over Easement Area and over adjoining land of Grantor's property to the extent necessary for the purposes contained herein, using gates, lanes, driveways, roads, and adjoining public roads where reasonably necessary and practical as determined by Association.

3. **Use of Easement Area:** Association shall have right to place, construct, reconstruct, upgrade, improve, alter, operate, use, inspect, patrol, maintain, repair, replace, relocate, read meter, leave de-energized, modify, or remove its facilities within Easement Area, and make such changes, alterations, substitutions, additions to or extensions of its facilities within Easement Area as it may deem advisable, including right to increase the number of wires, cables, lines, or equipment, for the distribution of electrical energy and technological purposes (including but not limited to Association's control, data acquisition, and operation of facilities).

4. **Damages to Property:** Association shall be liable to Grantor for any physical damages to Grantor's land and property situated within and outside Easement Area caused by the negligence of Association, its employees, agents, or contractors. Association shall repair, or at the option of Association reimburse Grantor for the reasonable costs of repairs for any such physical damage, provided repairs are mutually agreed upon by both Grantor and Association. Likewise, Grantor shall be liable to Association for any damages to Association's facilities located on, under, or within Easement Area caused by negligence of Grantor.

5. **Grantor's rights unaffected:** Grantor reserves the right to use and enjoy the land contained within Easement Area in any manner not inconsistent with the rights and privileges granted to Association, including, but not limited to, the right to construct driveways, roads, streets, sidewalks, entranceways, parking lots, or uses of like nature, over and across said Easement Area, provided said uses shall be subject to federal, state, and local safety codes, and Grantor does not construct or install buildings, signs, post and/or fence within Easement Area containing underground facilities, or other like structure within Easement Area that will interfere or conflict with Association facilities without first notifying and obtaining Association's consent. Association shall have right to withhold permission for such construction or installation if within Association's sole opinion said construction will interfere or conflict with Association's facilities.

6. **Maintenance of vegetation:** Association shall have the right from time to time to: (a) clear, cut, trim, control growth, apply herbicides to, and remove trees, shrubbery, brush, and other growth and obstructions of any kind and description within entire Easement Area to keep such growth and obstructions clear of facilities; and (b) cut down or trim any and all dead, decayed, diseased, weak, leaning, or dangerous tree ("Danger Tree") now or hereafter located on that part of Grantor's land outside Easement Area that is tall enough to fall within 5 feet of Association's wires or any other part of the facilities, provided Association notifies Grantor prior to cutting any danger tree that is not dead, diseased, or decayed.

7. **Notice of buried structures:** Association is responsible for calling the Mississippi 811 System for locating other buried utilities and for damages to other utilities within Easement Area caused by Association's negligence. Prior to Association's placement of any facilities on Grantor's land or property, Grantor shall give Association notice of the presence and location of any buried structures not owned by other utilities such as water line, septic tank, field line, etc., situated in or under Grantor's land. Association shall not be responsible for damages to any buried structure, except for other utilities covered under the Mississippi 811 System, now in place or hereafter placed and installed within Grantor's land that Grantor did not make known to Association.

8a. **Underground facilities:** The following additional provisions shall apply to any Easement Area granted for underground facilities:

a. Grantor agrees to clear and remove any and all growth, material, and obstructions from Easement Area prior to Association installing underground facilities;
b. Grade slope within an Easement Area shall not exceed 25 percent. If slope exceeds 25 percent, Grantor shall be responsible for grading slope to 25 percent or less, or Association may shift its facilities laterally until such grade slope is available;
c. After installation of underground facilities, Association shall back-fill all trenches to grade level without compacting. Grantor shall be solely responsible for compacting back-filled trenches and back-filling any settlement of trenches and excavated areas. Association shall not be responsible for damages to roads, streets, parking lots, sidewalks, or other surfaced areas caused by or resulting from the settlement of trenches and excavated areas. Grantor will indemnify and hold Association harmless against any and all claims or liability for property damage or injury to persons or animals due to or as a result of settlement of trenched or excavated areas;
d. Association shall have the right to dig up, remove, or destroy any landscaping and/or paved areas located or situated in Easement Area in order to maintain, inspect, operate, or reconstruct its underground facilities. Grantor shall bear the sole risk for any damage to driveways, sidewalks, paved areas, fences, signs, structures, sod, shrubbery, trees, or landscaping situated within Easement Area resulting from any work or other activities performed by Association in accordance with this right-of-way easement; and Association shall not be liable or responsible for any such damage;
e. Grantor agrees that if for any reason Grantor request and/or requires Association to relocate underground facilities installed within Easement Area, Association will relocate its facilities at the sole cost and expense of Grantor provided: (1) such relocation is sound and feasible from an engineering standpoint, and (2) Grantor grants Association an alternative, adequate easement, as determined by Association, for said relocation;
f. A minimum separation of 4 feet is required between Association's underground facilities and facilities/structures of any other utility placed within Easement Area, including distance to edge of pavement. Location and/or depth for each utility's facilities shall be established by mutual agreement and/or by exhibit attached hereto.

8b. **Underground facilities in subdivision or development:** All provisions in paragraph 8.0 above and the following additional provisions shall apply to any Easement Area granted for underground facilities within a platted subdivision or development:

a. Grantor agrees to establish for all lots/parcels (hereinafter "Plot") presently designated on recorded plat, or as hereafter surveyed, laid out, and re-platted, a 15 foot wide Easement Area (i) adjacent, along, beside, and across all roads, streets, lanes, alleys, etc., and Plots adjacent to same, (ii) adjacent, along, and beside all property lines and Plots (excluding between "zero-lot-line" Plots and Plots where multi-tenant buildings are constructed/joined across lot lines), (iii) within all landscaped lanes and green areas, and (iv) from Association's transformer/pedestal to each individual Plot to delivery point or meter;
b. Association will determine meter location for Plots: i) designated "zero-lot-line"; ii) with less than a 15 foot "setback"; and iii) having Multi-tenant buildings. For such Plots, Grantor and/or property owner shall be responsible for furnishing, installing, and maintaining all electrical conduits to Association's transformer, pedestal, Plot corner, or delivery point (including service conductors when required by Association) in accordance with Association's specifications;
c. If all or portions of adjacent Plots are sold as one parcel, or Plots are re-platted, and no Association facilities exist between adjacent Plot lines, the easement established by this document between said Plot lines of any such lot/parcel shall terminate;
d. The terms and provisions of any separate Agreement for Electrical Facilities entered into between Association, Grantor, or Developer for a subdivision or development shall be incorporated herein as if fully written into this Right-of-Way Easement.

9. **Use of Grantor's land:** Association agrees to use land for purpose authorized in this easement. During the period of construction, maintenance, inspection, repair, or reconstruction of facilities, Grantor grants unto Association the right to use such parts of Grantor's land that abut Easement Area that are necessary and reasonable to allow Association to bring machinery, supplies, and equipment to the area of construction, and to place thereon during the period of such work any equipment, supplies, and materials excavated from Easement Area. Upon completion of such work, Association shall, at its sole cost and expense, restore the surface of Grantor's land abutting Easement Area to the same condition existing prior to such activity as may be reasonably possible.

10. **Relocation of Facilities:** After facilities are installed by Association, Grantor shall not make any change to the surface grade and elevation, or change the property layout, and/or use of Grantor's land that would require Association to relocate its facilities within Easement Area without Association's prior written approval.

11. **Termination of Easement:** All prior right-of-way easements granted to Association for same Easement Area described herein or for adjacent facilities that are relocated to Easement Area described herein are hereby cancelled and released. In the event right-of-way easement granted ceases to be utilized for purposes described herein or is abandoned, excluding facilities intentionally left de-energized for providing two-way feeds, emergency back-up, etc., and for any period of non-use due to force majeure, e.g., Acts of God, wars, strikes, and other reasons beyond Association's control, said easement shall automatically terminate and return to Grantor or its assigns. All above ground facilities within cancelled or released Easement Area will be removed by Association and upon completion of such work will restore Easement Area to same condition existing prior to such removal activity.

12. **Warranty of title:** Grantor hereby represents and covenants that he(she) is the owner, lessee, and/or authorized agent of the above described lands, warrants that he(she) has legal authority to grant this easement, and agrees to indemnify and save and hold harmless Association, its officers, agents, and employees from any and all liens, claims, costs, liability, damages, and/or legal fees for or on account of Association's use of said easement from Grantor's misrepresentation of his(her) legal authority to execute this easement. This Right-of-Way Easement shall be binding upon Grantor, his legal representatives, heirs, executors, administrators, successors, and assigns. Grantor agrees that any instrument executed or given from and after the date hereof relating to Grantor's land shall be given subject to this easement and the existence of this easement shall be recited in any such instrument.

13. **Waiver:** Association's failure to exercise any right granted herein or its failure to insist, in any one or more instances, upon a strict performance of any of the obligations, covenants, or agreements contained herein shall in no way be construed to constitute a waiver, relinquishment, or release of such rights, obligations, covenants, or agreements.

IN WITNESS WHEREOF, the above and foregoing easement is hereby granted and made effective on the 7th day of August, 2018, subject to all of its terms, conditions, and provisions provided for herein.

WITNESS (Legal Name): **GRANTOR (Legal Name):** City of Hattiesburg

◀Signature▶

Kermas Eaton, City Clerk ◀Print Name & Title▶ Toby Barker, Mayor

GRANTOR ACKNOWLEDGEMENT

STATE OF Mississippi
COUNTY OF Forrest

PERSONALLY appeared before me, the undersigned authority in and for the aforesaid County and State, on this 7th day of August, 2018, within my jurisdiction, the within named Toby Barker, who acknowledged that he(she) executed the above and foregoing instrument as owner of said lands, or he(she) is authorized to execute easement by said company, and that for and on behalf of said company, and as its act and deed, he(she) executed the above and foregoing instrument, after first having been duly authorized by said company so to do.

My commission expires: _____ Notary Public _____

WITNESS ACKNOWLEDGEMENT

STATE OF Mississippi
COUNTY OF Forrest

PERSONALLY appeared before me, the undersigned authority in and for the aforesaid County and State, on this 7th day of August, 2018, within my jurisdiction, _____, one of the subscribing witnesses to the above and foregoing instrument, who, being first duly sworn, states that he(she) saw the above named Toby Barker, whose name is subscribed thereto, sign, and deliver the same to Pearl River Valley Electric Power Association; and that Affiant subscribed his(her) name as a witness thereto in the presence of Kermas Eaton.

My commission expires: _____ Notary Public _____

FOR CHANCERY CLERK USE ONLY					
County	Section	Township	Range	Book	Page
Prepared by & Return to:	Pearl River Valley Electric Power Association, P. O. Box 1217, Columbia, MS 39429				

RIGHT-OF-WAY EASEMENT

STATE OF MISSISSIPPI MSEP _____ JOB NO 36500

COUNTY OF LAMAR PRVEPA 24.1std (Revised 1-2-2015) MAP NO V5-28-9A

THIS EASEMENT, made on date shown below by and between **Pearl River Valley Electric Power Association whose address is 1422 Highway 13 North, Columbia, Mississippi, 39429-1217, phone number 601-736-2666**, (hereinafter the "Association") and CITY OF HATTIESBURG, phone 601-545-4682 address PO BOX 1898 HATTIESBURG MS 39403, (hereinafter the "Grantor").

WHEREAS, in accordance with Association's By-Laws, Section 1.09, and Service Rules and Regulations, Section V.2, a member of Association shall execute, deliver, and grant to Association a right-of-way easement for furnishing electric service to member and/or other members of Association;

WHEREAS, Grantor is owner, lessee, and/or authorized agent of certain lands (hereinafter "Grantor's land") situated in A PART OF THE NW 1/4 OF SECTION 15, T4N, R14W as more particularly described in instruments on file and of record in the Chancery Clerk's office of said county;

WHEREAS, Grantor hereby gives his consent and approval to Association for the creation of a right-of-way easement over, across, and under Grantor's land, HAVING A POINT OF BEGINNING ON THE WEST PROPERTY LINE APPROXIMATELY 10 FEET EAST OF LAMAR BLVD THEN RUN EAST FOR 32 FEET;

NOW THEREFORE, Grantor hereby grants unto Association, its successors, and assigns, a perpetual utility easement in, upon, over, across, along, and under portions of Grantor's land, (hereinafter "Easement Area"), for the installation and maintenance of electric distribution power lines, wires, equipment, and Association's communication cables (hereinafter "facilities"). Facilities installed hereunder shall remain the property of Association and Association shall be solely responsible for the construction, operation, and maintenance of facilities within Easement Area. Grantor also agrees to license, permit, or otherwise agree to the joint use (JU) or occupancy of a JU pole by any other association or corporation having a current joint use pole agreement with Association for communication or television purposes. (Grantor may strike JU sentence only and initial_____)

IN FURTHER consideration of the promises, mutual covenants, and agreements contained herein, Association and Grantor agree as follows:

1. **Location and Width of Easement Area:** Location of Easement Area on Grantor's land shall be determined by the actual centerline placement of facilities by Association during the initial construction of facilities, and/or by description thereof by exhibit attached hereto. Width of Easement Area shall be determined by "Facility Type" described below and measured from centerline of facilities.

Facility Type (width on either side of power line centerline with total width shown in parenthesis)	Single Phase	Three Phase
a. Anchors; Guys; & Overhead Services, 600 volts or less	5 (10) ft.	5 (10) ft.
b. Facilities along, beside, adjacent to Roads, Streets, Highways, Lanes, Alleys, & Property Lines	25 (50) ft.	25 (50) ft.
c. Facilities within landscaped, maintained yards & 100 ft. from Residence & Business w/HVAC	10 (20) ft.	15 (30) ft.
d. All Other Overhead Facilities	15 (30) ft.	25 (50) ft.
e. All Underground Facilities	7.5 (15) ft.	7.5 (15) ft.

2. **Ingress and Egress:** Association shall have free ingress and egress over Easement Area and over adjoining land of Grantor's property to the extent necessary for the purposes contained herein, using gates, lanes, driveways, roads, and adjoining public roads where reasonably necessary and practical as determined by Association.

3. **Use of Easement Area:** Association shall have right to place, construct, reconstruct, upgrade, improve, alter, operate, use, inspect, patrol, maintain, repair, replace, relocate, read meter, leave de-energized, modify, or remove its facilities within Easement Area, and make such changes, alterations, substitutions, additions to or extensions of its facilities within Easement Area as it may deem advisable, including right to increase the number of wires, cables, lines, or equipment, for the distribution of electrical energy and technological purposes (including but not limited to Association's control, data acquisition, and operation of facilities).

4. **Damages to Property:** Association shall be liable to Grantor for any physical damages to Grantor's land and property situated within and outside Easement Area caused by the negligence of Association, its employees, agents, or contractors. Association shall repair, or at the option of Association reimburse Grantor for the reasonable costs of repairs for any such physical damage, provided repairs are mutually agreed upon by both Grantor and Association. Likewise, Grantor shall be liable to Association for any damages to Association's facilities located on, under, or within Easement Area caused by negligence of Grantor.

5. **Grantor's rights unaffected:** Grantor reserves the right to use and enjoy the land contained within Easement Area in any manner not inconsistent with the rights and privileges granted to Association, including, but not limited to, the right to construct driveways, roads, streets, sidewalks, entranceways, parking lots, or uses of like nature, over and across said Easement Area, provided said uses shall be subject to federal, state, and local safety codes, and Grantor does not construct or install buildings, signs, post and/or fence within Easement Area containing underground facilities, or other like structure within Easement Area that will interfere or conflict with Association facilities without first notifying and obtaining Association's consent. Association shall have right to withhold permission for such construction or installation if within Association's sole opinion said construction will interfere or conflict with Association's facilities.

6. **Maintenance of vegetation:** Association shall have the right from time to time to: (a) clear, cut, trim, control growth, apply herbicides to, and remove trees, shrubbery, brush, and other growth and obstructions of any kind and description within entire Easement Area to keep such growth and obstructions clear of facilities; and (b) cut down or trim any and all dead, decayed, diseased, weak, leaning, or dangerous tree ("Danger Tree") now or hereafter located on that part of Grantor's land outside Easement Area that is tall enough to fall within 5 feet of Association's wires or any other part of the facilities, provided Association notifies Grantor prior to cutting any danger tree that is not dead, diseased, or decayed.

7. **Notice of buried structures:** Association is responsible for calling the Mississippi 811 System for locating other buried utilities and for damages to other utilities within Easement Area caused by Association's negligence. Prior to Association's placement of any facilities on Grantor's land or property, Grantor shall give Association notice of the presence and location of any buried structures not owned by other utilities such as water line, septic tank, field line, etc., situated in or under Grantor's land. Association shall not be responsible for damages to any buried structure, except for other utilities covered under the Mississippi 811 System, now in place or hereafter placed and installed within Grantor's land that Grantor did not make known to Association.

8a. **Underground facilities:** The following additional provisions shall apply to any Easement Area granted for underground facilities:

a. Grantor agrees to clear and remove any and all growth, material, and obstructions from Easement Area prior to Association installing underground facilities;

b. Grade slope within an Easement Area shall not exceed 25 percent. If slope exceeds 25 percent, Grantor shall be responsible for grading slope to 25 percent or less, or Association may shift its facilities laterally until such grade slope is available;

c. After installation of underground facilities, Association shall back-fill all trenches to grade level without compacting. Grantor shall be solely responsible for compacting back-filled trenches and back-filling any settlement of trenches and excavated areas. Association shall not be responsible for damages to roads, streets, parking lots, sidewalks, or other surfaced areas caused by or resulting from the settlement of trenches and excavated areas. Grantor will indemnify and hold Association harmless against any and all claims or liability for property damage or injury to persons or animals due to or as a result of settlement of trenched or excavated areas;

d. Association shall have the right to dig up, remove, or destroy any landscaping and/or paved areas located or situated in Easement Area in order to maintain, inspect, operate, or reconstruct its underground facilities. Grantor shall bear the sole risk for any damage to driveways, sidewalks, paved areas, fences, signs, structures, sod, shrubbery, trees, or landscaping situated within Easement Area resulting from any work or other activities performed by Association in accordance with this right-of-way easement; and Association shall not be liable or responsible for any such damage;

e. Grantor agrees that if for any reason Grantor request and/or requires Association to relocate underground facilities installed within Easement Area, Association will relocate its facilities at the sole cost and expense of Grantor provided: (1) such relocation is sound and feasible from an engineering standpoint, and (2) Grantor grants Association an alternative, adequate easement, as determined by Association, for said relocation;

f. A minimum separation of 4 feet is required between Association's underground facilities and facilities/structures of any other utility placed within Easement Area, including distance to edge of pavement. Location and/or depth for each utility's facilities shall be established by mutual agreement and/or by exhibit attached hereto.

8b. **Underground facilities in subdivision or development:** All provisions in paragraph 8.0 above and the following additional provisions shall apply to any Easement Area granted for underground facilities within a platted subdivision or development:

a. Grantor agrees to establish for all lots/parcels (hereinafter "Plot") presently designated on recorded plat, or as hereafter surveyed, laid out, and re-platted, a 15 foot wide Easement Area (i) adjacent, along, beside, and across all roads, streets, lanes, alleys, etc., and Plots adjacent to same, (ii) adjacent, along, and beside all property lines and Plots (excluding between "zero-lot-line" Plots and Plots where multi-tenant buildings are constructed/joined across lot lines), (iii) within all landscaped lanes and green areas, and (iv) from Association's transformer/pedestal to each individual Plot to delivery point or meter;

b. Association will determine meter location for Plots: i) designated "zero-lot-line"; ii) with less than a 15 foot "setback"; and iii) having Multi-tenant buildings. For such Plots, Grantor and/or property owner shall be responsible for furnishing, installing, and maintaining all electrical conduits to Association's transformer, pedestal, Plot corner, or delivery point (including service conductors when required by Association) in accordance with Association's specifications;

c. If all or portions of adjacent Plots are sold as one parcel, or Plots are re-platted, and no Association facilities exist between adjacent Plot lines, the easement established by this document between said Plot lines of any such lot/parcel shall terminate;

d. The terms and provisions of any separate Agreement for Electrical Facilities entered into between Association, Grantor, or Developer for a subdivision or development shall be incorporated herein as if fully written into this Right-of-Way Easement.

9. **Use of Grantor's land:** Association agrees to use land for purpose authorized in this easement. During the period of construction, maintenance, inspection, repair, or reconstruction of facilities, Grantor grants unto Association the right to use such parts of Grantor's land that abut Easement Area that are necessary and reasonable to allow Association to bring machinery, supplies, and equipment to the area of construction, and to place thereon during the period of such work any equipment, supplies, and materials excavated from Easement Area. Upon completion of such work, Association shall, at its sole cost and expense, restore the surface of Grantor's land abutting Easement Area to the same condition existing prior to such activity as may be reasonably possible.

10. **Relocation of Facilities:** After facilities are installed by Association, Grantor shall not make any change to the surface grade and elevation, or change the property layout, and/or use of Grantor's land that would require Association to relocate its facilities within Easement Area without Association's prior written approval.

11. **Termination of Easement:** All prior right-of-way easements granted to Association for same Easement Area described herein or for adjacent facilities that are relocated to Easement Area described herein are hereby cancelled and released. In the event right-of-way easement granted ceases to be utilized for purposes described herein or is abandoned, excluding facilities intentionally left de-energized for providing two-way feeds, emergency back-up, etc., and for any period of non-use due to force majeure, e.g., Acts of God, wars, strikes, and other reasons beyond Association's control, said easement shall automatically terminate and return to Grantor or its assigns. All above ground facilities within cancelled or released Easement Area will be removed by Association and upon completion of such work will restore Easement Area to same condition existing prior to such removal activity.

12. **Warranty of title:** Grantor hereby represents and covenants that he(she) is the owner, lessee, and/or authorized agent of the above described lands, warrants that he(she) has legal authority to grant this easement, and agrees to indemnify and save and hold harmless Association, its officers, agents, and employees from any and all liens, claims, costs, liability, damages, and/or legal fees for or on account of Association's use of said easement from Grantor's misrepresentation of his(her) legal authority to execute this easement. This Right-of-Way Easement shall be binding upon Grantor, his legal representatives, heirs, executors, administrators, successors, and assigns. Grantor agrees that any instrument executed or given from and after the date hereof relating to Grantor's land shall be given subject to this easement and the existence of this easement shall be recited in any such instrument.

13. **Waiver:** Association's failure to exercise any right granted herein or its failure to insist, in any one or more instances, upon a strict performance of any of the obligations, covenants, or agreements contained herein shall in no way be construed to constitute a waiver, relinquishment, or release of such rights, obligations, covenants, or agreements.

IN WITNESS WHEREOF, the above and foregoing easement is hereby granted and made effective on the 7th day of August, 2018, subject to all of its terms, conditions, and provisions provided for herein.

WITNESS (Legal Name): Kermas Eaton, City Clerk

GRANTOR (Legal Name): City of Hattiesburg

◄Signature►

◄Print Name & Title► Toby Barker, Mayor

GRANTOR ACKNOWLEDGEMENT

STATE OF Mississippi
COUNTY OF Forrest

PERSONALLY appeared before me, the undersigned authority in and for the aforesaid County and State, on this 7th day of August, 2018, within my jurisdiction, the within named Toby Barker, who acknowledged that he(she) executed the above and foregoing instrument as owner of said lands, or he(she) is authorized to execute easement by said company, and that for and on behalf of said company, and as its act and deed, he(she) executed the above and foregoing instrument, after first having been duly authorized by said company so to do.

My commission expires: 6/18/19 Notary Public Kathleen M. Hartfield

STATE OF MISSISSIPPI KATHLEEN M. HARTFIELD ID No 65173 NOTARY PUBLIC Comm Expires June 18, 2019 FORREST COUNTY

WITNESS ACKNOWLEDGEMENT

STATE OF Mississippi
COUNTY OF Forrest

PERSONALLY appeared before me, the undersigned authority in and for the aforesaid County and State, on this 7th day of August, 2018, within my jurisdiction, _____, one of the subscribing witnesses to the above and foregoing instrument, who, being first duly sworn, states that he(she) saw the above named Toby Barker, whose name is subscribed thereto, sign, and deliver the same to Pearl River Valley Electric Power Association; and that Affiant subscribed his(her) name as a witness thereto in the presence of Kermas Eaton.

My commission expires: 6/18/19 Notary Public Kathleen M. Hartfield

STATE OF MISSISSIPPI KATHLEEN M. HARTFIELD ID No 65173 NOTARY PUBLIC Comm Expires June 18, 2019 FORREST COUNTY

City of Hattiesburg, MS

200 Forrest St.
P.O. Box 1898
Hattiesburg, MS 39401

Master

File Number: 2018-666

File ID:	2018-666	**Type:**	Regular Agenda Item	**Status:**	Policy Agenda
Version:	1	**Reference:**		**In Control:**	City Council
Requester:				**File Created:**	07/31/2018
Brief Title:	Recodification and supplementattion service agreement between the City of Hattiesbur and Municode.			**Final Action:**	08/07/2018
				Minute Book Number:	MB 2018-193

Title:

Authorize Mayor to execute a recodification and supplementation services agreement between the City of Hattiesburg and Municode for online services of publishing and updating the Code of Ordinances of the City of Hattiesburg.

Notes:			
		Agenda Date:	08/07/2018
Indexes:		**Agenda Number:**	VI.-9
Sponsors:		**Enactment Date:**	
Attachments:	Municode-Supp Agreement, Executed - Municode-Supp Agreement	**Enactment Number:**	
Contact:		**Meeting Date:**	
Drafter:		**Effective Date:**	

History of Legislative File

Version:	Acting Body:	Date:	Action:	Sent To:	Due Date:	Return Date:	Result:
1	City Council	08/07/2018	Authorize				Pass

Action Text: A MOTION was made by Council Member George and seconded by Council Vice President Dryden to Authorize Mayor to execute a recodification and supplementation services agreement between the City of Hattiesburg and Municode for online services of publishing and updating the Code of Ordinances of the City of Hattiesburg.

There being no discussion, the Motion received the affirmative vote of the Council as follows:

Yeas: 5 - George, Delgado, Carroll, Dryden and Brown

Nays: 0

Yea: 5
Council Member George
Council Member Delgado
Council President Carroll
Council Vice President Dryden
Council Member Brown

Text of Legislative File 2018-666

Title

Authorize Mayor to execute a recodification and supplementation services agreement between the City of Hattiesburg and Municode for online services of publishing and updating the Code of Ordinances of the City of Hattiesburg.

Summary

Recodification and supplementation services agreement between the City of Hattiesburg and Municode.

Budget Information

Expenditure Type

Purchasing Item

Publication Information

Executive Summary

We would like to propose the following option for your consideration. For further details on the project, please see page 7.

Recodification, Supplementation and MunicodeNEXT:

Logic: Give your municipality a fresh start. Engage our full-time attorneys to examine the legal sufficiency of your code from top to bottom. Clean up the pagination, reprint all pages and replace binders and tabs, if needed. Quickly and efficiently transition your code to the most advanced suite of web/mobile services available in the nation: ***MunicodeNEXT****.*

- **Recodification** ..... **$13,200**[1]

  Timeline ..... 10-12 months

  The recodification base cost of $13,200 is based on a 550 page, single column 10-point code (existing font) or 622 11-point pages or 688 12-point pages. The $3,112.50 paid by the City for republication of the Code will be applied to the recodification project.

  A full-time, Municode attorney will legally review the Code, not just a code editor. We will research all legislation against the State Constitution, State Law, and the Charter, and ordinances will be compared to other ordinances to determine if there are inconsistencies or conflicts within the legislation itself. We will suggest a structure and organization for the code and provide a table of contents indicating the recommended structure. We will also provide State Law references within the code and hyperlinks to internal references within the code. We will provide a legal memorandum containing recommended options and conduct a conference to review the memorandum and recommendations. Our team will edit the text of your code to reflect proper grammar and stylistic consistency; create a subject matter index; create all tables (contents, state law reference, prior code comparison, and ordinance disposition); and insert graphics into the printed and electronic versions of the code. A draft code will be provided to you for final review prior to printing and shipment.

- **Supplement Service** (single column per page rate) **$20**

  Municode does not charge an extra fee for posting supplements online or printing your supplement pages. All of these services are already included in your supplement per page rate.

- **Online hosting** ..... **$550**[2]

  The online code is only $550 for our standard service. If you want to further enhance the transparency of your online code, you can upgrade to the MyMunicode bundle for only $1,450!

---

[1] Please see page 4 for additional pricing details.

[2] Please see page 6 for additional features and pricing available on our MunicodeNEXT platform.

Recodification Quotation Sheet

Recodification base cost, includes **$13,200**

- 550 single column pages
- Receipt, review and organization of materials
- Legal analysis & research by a full-time, Municode attorney
  - Preparation of legal memorandum by a Municode attorney
- Conference with attorney (make selections below)
- Implementation of approved legal findings
  - Updating state law references
  - Editorial preparation and proofreading
  - Page formatting (make selections below)
  - Indexing
- Tables[3], Graphics[4] & tabular[5] matter
- Final proofreading and corrections
- Quality control review and printing
  - 5 copies, to include 3-post stamped binders and tabs
- Adopting ordinance prepared by a Municode attorney

Project is based on the font size & pages below – please only select one:

Font Size Single Column: ☐ 10-point (550) (existing format) ☐ 11-point (622) ☐ 12-Point (688)

Conference Selection:

☐ On-site conference, each **Attorney time, travel, lodging and per diem**

☐ Teleconference or web-based conference, 3-hour session **No charge[6]**

Format Elections *(Please check or circle desired elections below)*

Font: Times New Roman - Will be used as the font unless otherwise indicated.

Other choices include: Helvetica, **Avant-Garde Demi**, Courier, Palatino, Helvetica Narrow, Century Gothic, Gill Sans and Arial MT

Binder Color: ☒ Semi-Bright Black ☐ Dark Blue ☐ Hunter Green ☐ Burgundy

Binder Stamping Color: ☒ Gold ☐ Silver ☐ White

Items not included in base cost

- Pages **over** 550, single column pages per page **$24**
- Freight **Actual**
- State sales tax **If applicable**
- Post your code on MunicodeNEXT **See selections on page 6**

Payments for recodification project - *Base cost split into four payments – Your project can be budgeted over two fiscal years*

- Credit carried over from Republication project **- $3,112**
- Execution of Agreement **$1,500**
- Submission of the Legal Memorandum **$3,300**
- Submission of Draft Code **$3,300**
- Delivery **Balance**

---

[3] The following tables will be created and are included in the base cost: supplement history table, code comparative table, state law reference table and ordinance history table. An additional hourly charge applies for creation, modification, addition or updating of any table or schedule other than those enumerated in this footnote. This includes Traffic and Fee tables or schedules.

[4] Includes printing all copies. Additional fees will apply if graphics are printed in color.

[5] Tabular matter is defined as algebraic formula, or other materials that require special programs or extra editorial time to modify and prepare for inclusion in an update.

[6] For the initial 3-hour session. $150 per hour thereafter.

Supplement Service Base Page Rate[7] Quotation Sheet

Supplement Service Base Page Rate

Page Format	Base Page Rate
Single Column	$20 per page

Base page rate above includes:

- Acknowledgement of material
- Data conversion, as necessary
- Editorial work
- Proofreading
- Updating the index
- Schedule as selected by you[8]
- Updating electronic versions[9] and online code
- Printing 5 copies

Base page rate above excludes:

Freight	**Actual freight**
State sales tax	**If applicable**
Graphics[10] & tabular[11] matter, per graphic or table	**$10**
Annual Administrative Support Fee[12]	**$475**
MyMunicode or online code	**Selections on page 6**

Electronic media options for Code of Ordinances (sent via download) [13]

❑ Folio Bound Views	**$295 initially then $100 per update**
❑ WORD (DOCX)	**$150 initially then $75 per update**
❑ Adobe PDF of the code	**$150 initially then $75 per update**
❑ Adobe PDF of each supplement	**$150 initially then $75 per update**

Payment for Supplements and Additional Services:

- Invoices will be submitted upon shipment of project(s).

---

[7] All prices quoted in this section may be increased annually in accordance with the Consumer Price Index – Bureau of Labor Statistics.
[8] Schedule for supplements can be weekly, bi-weekly, monthly, bi-monthly, quarterly, tri-annual, semi-annual, annual or upon authorization. Electronic updates can occur more frequently than printed supplements.
[9] We do not charge a per page rate for updating the internet; however, a handling fee is charged for PDF, Word, Folio or additional electronic media items ordered.
[10] Includes printing of all copies. Additional fees will apply if graphics are printed in color.
[11] Tabular matter is defined as tables, algebraic formula, or other materials that require special programs or extra editorial time to modify and prepare for inclusion in an update.
[12] We will work with your budget cycle to establish the billing month for the Administrative Support Fee.
[13] "delivery" is defined as making updated electronic data available to you via download or FTP. Fee applies whenever content is delivered as PDF, Folio or Word, via one of the aforementioned mediums.

Online Services Quotation Sheet

Please check the appropriate box(es) to indicate your selection. To learn more about our online services, you can participate in one of our free webinars here or view a pre-recorded version of the webinar here.

Services currently enrolled in:

- **MyMunicode**[14] includes: **$1,495 annually**
  MunicodeNEXT (Online Code), OrdBank, CodeBank, CodeBank Compare + eNotify[15]**, MuniPRO, and Custom Banner**

Optional services to add if MyMunicode is not selected:

- ☐ **OrdLink** Upgrade OrdBank by adding OrdLink for an additional $100 per year

MuniDocs – only select one option below for MuniDocs.

- ☐ MuniDocs (up to 25 documents per year updated quarterly) **$350**
- ☐ MuniDocs (up to 100 documents per year updated quarterly) **$750**
  - Additional documents, each with either option **$7.50**

(If MuniDocs is elected, please circle the list of categories and dated documents to be posted)

Minutes - Council Minutes - Committee Minutes – Agendas – Resolutions – Budgets - Other_____

Historical OrdBank linking can be provided prior to 2018 at $35 per ordinance received.

- ☐ Number or Ordinances _____ x $35 per ordinance.

Municode does not charge an extra fee to update the internet – this is included in your supplement rate.

[14] Municode does not charge a per page rate for updating the online code (Internet). Your per page supplement rate for the codification of new legislation is not affected by selecting our budget friendly and feature enriched MyMunicode bundle package.
[15] Enrollment in CodeBank is required in order to receive the CodeBank Compare/eNotify technology.

Scope of Services - Recodification

We will handle the publishing for your Code of Ordinances. This includes legal work, editing, page composition, proofreading, indexing, and delivering the information in print or via electronic copy. Hereinafter, unless specifically cited, a reference to "codes" or "the codes" includes the Municipal Code of Hattiesburg, Mississippi. We understand the scope of this project to include a complete recodification of the code, ongoing supplemental services and online hosting of the code. A summary of the recodification process is provided below.

Excellence

"The code update went far beyond my expectations. Everyone at Municode was nice to work with and always responded in a timely manner. Your customer service was outstanding. Thanks again for a very positive experience."
- Barron, WI

Recodification Project Leader: Julie Lovelace, Vice President of Code Department

Material

The following sections describe the nature of material included or excluded in the project, creation of a disposition list, and the methodology of adding material to the code.

Ordinances. All legislation of a general and permanent nature, passed in final form by you as of the cutoff date established by the Municode attorney (usually following delivery of the legal memorandum), will be included in the new code. We will rely upon the material (in print or electronic form) as furnished by you during the recodification process. All material that we receive will be acknowledged via e-mail, to establish a record of included ordinances. Legislation not of a general and permanent nature will be omitted from the code unless otherwise instructed by you. Examples include Appropriations; Franchises; Bonds; Vacating Streets and Other Public Properties; Sales of Surplus Assets and Properties; Tax Levies; Special Elections; Contracts and Agreements; Rezoning; Personnel Regulations; Annexations and Disannexations; Tax Anticipated Notes and Issuances of Similar Debt Instruments; Appointments of Named Individuals to Positions within a Governmental Body; Comprehensive Master Plans, Traffic Schedules, and Fee Schedules (however, fee schedules can be included for an additional fee – quotation upon request).

Attorney Analysis and Review of Material. We will assign a team, consisting of a lead attorney, legal editor, proofreader and indexer, to the project. All recommendations by our legal team are intended for use by your attorney and should not be considered legal advice. Our legal team is responsible for the following: We will research all legislation submitted by you against the State Constitution, State Law and the Charter; additionally, the ordinances are compared to other ordinances, in order to determine if there are any inconsistencies or conflicts within the legislation itself. Zoning and Land Use provisions will be reviewed only if included in the code. Ordinances enacted, or added, subsequent to the date of this agreement, or items not contemplated within the scope of service, may be added at an agreed upon page rate. We will suggest a structure and organization for the code and provide a table of contents indicating the recommended structure.

Page Format Options. We will review page composition format options, such as font type, font size, page layout, and graphics appearance and placement with you. We will help you choose a format that produces a professional document that is easily researched.

References. We will provide State Law references within the code. Editor's notes will be provided as appropriate. Internal references within the code will be hyperlinked in the online version.

Legal Memorandum. We will provide you and your staff with a user-friendly legal memorandum containing all of our analysis and recommendations. This memorandum will reflect our attorney's legal review and will provide you with recommended options intended to remove conflicts and inconsistencies; conform to state law, when appropriate; and ensure compliance with your charter. This approach facilitates collaboration and dissemination among departments, thus making the process as easy for you as possible. Our goal is to make the recodification process simple and smooth for you. From start to finish, we will work with you to complete the project as quickly and efficiently as possible.

Conference. Within 30 days of your receipt of the Legal Memorandum, we will conduct a conference, either in person, via telephone or webinar, to review the legal memorandum and recommendations. All interested personnel may be included; but your attorney and clerk are essential. Issues discovered during the legal research will be discussed at the conference, with the goal of the conference being to come to agreement on any required changes. Your attorney has the final decision-making authority for resolution of issues brought up at the conference or noted in the legal memorandum.

Implementation of Conference Decisions

Editing and Proofreading. Our team will edit the text of your code to reflect proper grammar and stylistic consistency. We will not reword any provision that changes the substantive intent of the code, unless you approve the revision.

However, non-substantive revisions to improve readability are a part of the process. We will proofread your code. The text will be reviewed for sense and structure and to ensure the implementation of the decisions by your attorney and our attorney.

Graphics, Index and Tables. Our team will create a hierarchical, subject matter index and all tables (contents, state law reference, prior code comparison, and ordinance disposition) for your code as necessitated by the materials provided. The creation of additional tables can be performed for an additional hourly fee. We will insert the graphics you have provided into the printed and electronic versions of the code. Manipulation, enhancement or reformatting of any graphic supplied by you can be performed for an additional hourly fee.

Post Conference Code Draft. After editing and proofreading, a post-conference Code Draft incorporating solutions agreed upon at the legal conference will be delivered in printable electronic format for final review prior to printing and shipping. We guarantee typographical correctness. Any errors attributable to our team will be corrected at no charge during the term of this agreement.

Adopting Ordinance. Our attorney will provide an adopting ordinance upon completion of the project.

Delivery of Code

Electronic Format and Delivery Options. Your new code can be delivered in PDF, DOCX, Folio or integrated with the dtSearch Engine on our MunicodeNEXT platform. Electronic delivery mediums include online posting and download.

Printing and Binding. We will print your code on acid-free paper in your chosen format. Color printing is available at an additional charge. Standard binding for the code is three-post, expandable, dark blue, hunter green, semi-bright black, burgundy, leatherette binders with gold, silver or white stamping. Alternate binders, such as D-ring or polyvinyl, are also available. A seal or logo can be added to the front cover and spine in addition to the text, for an additional charge, if desired. Divider tabs for each major section of the code and index are also provided.

Client Responsibility

Amendatory Legislation. Please forward all adopted legislation (including amendments, the Charter, Special Acts and other pertinent rules and regulations having the effect of law) to be codified on a continual basis. Submission should be timely and can be sent in electronic or printed form. Electronic submission is highly preferred.

Review Legal Memorandum. Please review the legal memorandum to ensure that it comports with your intentions and modify and/or approve the proposed table of contents and organization of the code, page format, font type and size, approve number of copies to be printed, binder colors and choice of electronic format and medium.

Participation of Attorney. Please ensure your attorney and other interested personnel attend and participate in the project, including on-site or teleconference and review of the code draft.

Submission of Data. Please provide data, graphics and tables of the highest reproducible quality, preferably in their original, electronic format. Provide a black and white line art seal or logo for the binders, if desired.

Draft Code. Please review and return the draft within thirty (30) days of receipt. To assist you in this endeavor, a post-conference memorandum will accompany the draft code to point out to you where changes and additions have been made. Any changes to the text should be marked directly on the draft and returned to us. Changes not discussed at the conference may result in a proof update fee.

Supplemental Updating

We will handle 100% of the publishing for your code. This includes editing, page composition, proofreading, indexing, and delivering the information as printed or via electronic copy. Supplementation will start upon completion of the recodification project on the schedule selected by the client.

Editorial Approach. We use a team approach to editing. This provides for consistency in editing, understanding and quality of work for you.

Ongoing Supplementation. Our goal is to meet and exceed the needs and expectations of our clients. Working with you and your staff, we will create whatever supplementation schedule will best serve you and your citizens.

municode

Municipal Code Corporation | P.O. Box 2235 Tallahassee, FL 32316
info@municode.com | 800.262.2633
www.municode.com

This proposal shall be valid for a period of ninety (90) days from the date appearing below unless signed and authorized by Municode and the Client.

Term of Agreement. This Agreement shall begin upon execution of this Agreement and end three years after the publication date of the new code. Thereafter, the supplement service shall be automatically renewed from year to year provided that each party may cancel or change this agreement with sixty (60) days written notice.

Submitted by:

MUNICIPAL CODE CORPORATION

Municode Officer: _____

Title: President

Date: July 26, 2018

Accepted by:

CITY OF HATTIESBURG, MISSISSIPPI

By: _____

Title: _____

Date: _____

Executive Summary

We would like to propose the following option for your consideration. For further details on the project, please see page 7.

Recodification, Supplementation and MunicodeNEXT:

Logic: Give your municipality a fresh start. Engage our full-time attorneys to examine the legal sufficiency of your code from top to bottom. Clean up the pagination, reprint all pages and replace binders and tabs, if needed. Quickly and efficiently transition your code to the most advanced suite of web/mobile services available in the nation: ***MunicodeNEXT****.*

- **Recodification** ..... **$13,200**[1]

  Timeline ..... 10-12 months

  The recodification base cost of $13,200 is based on a 550 page, single column 10-point code (existing font) or 622 11-point pages or 688 12-point pages. The $3,112.50 paid by the City for republication of the Code will be applied to the recodification project.

  A full-time, Municode attorney will legally review the Code, not just a code editor. We will research all legislation against the State Constitution, State Law, and the Charter, and ordinances will be compared to other ordinances to determine if there are inconsistencies or conflicts within the legislation itself. We will suggest a structure and organization for the code and provide a table of contents indicating the recommended structure. We will also provide State Law references within the code and hyperlinks to internal references within the code. We will provide a legal memorandum containing recommended options and conduct a conference to review the memorandum and recommendations. Our team will edit the text of your code to reflect proper grammar and stylistic consistency; create a subject matter index; create all tables (contents, state law reference, prior code comparison, and ordinance disposition); and insert graphics into the printed and electronic versions of the code. A draft code will be provided to you for final review prior to printing and shipment.

- **Supplement Service** (single column per page rate) **$20**

  Municode does not charge an extra fee for posting supplements online or printing your supplement pages. All of these services are already included in your supplement per page rate.

- **Online hosting** ..... **$550**[2]

  The online code is only $550 for our standard service. If you want to further enhance the transparency of your online code, you can upgrade to the MyMunicode bundle for only $1,450!

---

[1] Please see page 4 for additional pricing details.
[2] Please see page 6 for additional features and pricing available on our MunicodeNEXT platform.

Recodification Quotation Sheet

Recodification base cost, includes **$13,200**

- 550 single column pages
- Receipt, review and organization of materials
- Legal analysis & research by a full-time, Municode attorney
  - Preparation of legal memorandum by a Municode attorney
- Conference with attorney (make selections below)
- Implementation of approved legal findings
  - Updating state law references
  - Editorial preparation and proofreading
  - Page formatting (make selections below)
  - Indexing
- Tables[3], Graphics[4] & tabular[5] matter
- Final proofreading and corrections
- Quality control review and printing
  - 5 copies, to include 3-post stamped binders and tabs
- Adopting ordinance prepared by a Municode attorney

Project is based on the font size & pages below – please only select one:

Font Size Single Column: ☐ 10-point (550) (existing format) ☐ 11-point (622) ☐ 12-Point (688)

Conference Selection:

☐ On-site conference, each **Attorney time, travel, lodging and per diem**

☐ Teleconference or web-based conference, 3-hour session **No charge[6]**

Format Elections *(Please check or circle desired elections below)*

Font: Times New Roman - Will be used as the font unless otherwise indicated.

Other choices include: Helvetica, **Avant-Garde Demi**, Courier, Palatino, Helvetica Narrow, Century Gothic, Gill Sans and Arial MT

Binder Color: ☒ Semi-Bright Black ☐ Dark Blue ☐ Hunter Green ☐ Burgundy

Binder Stamping Color: ☒ Gold ☐ Silver ☐ White

Items not included in base cost

- Pages <u>over</u> 550, single column pages per page **$24**
- Freight **Actual**
- State sales tax **If applicable**
- Post your code on MunicodeNEXT **See selections on page 6**

Payments for recodification project - *Base cost split into four payments – Your project can be budgeted over two fiscal years*

- Credit carried over from Republication project **- $3,112**
- Execution of Agreement **$1,500**
- Submission of the Legal Memorandum **$3,300**
- Submission of Draft Code **$3,300**
- Delivery **Balance**

---

[3] The following tables will be created and are included in the base cost: supplement history table, code comparative table, state law reference table and ordinance history table. An additional hourly charge applies for creation, modification, addition or updating of any table or schedule other than those enumerated in this footnote. This includes Traffic and Fee tables or schedules.

[4] Includes printing all copies. Additional fees will apply if graphics are printed in color.

[5] Tabular matter is defined as algebraic formula, or other materials that require special programs or extra editorial time to modify and prepare for inclusion in an update.

[6] For the initial 3-hour session. $150 per hour thereafter.

Supplement Service Base Page Rate[7] Quotation Sheet

Supplement Service Base Page Rate

Page Format	Base Page Rate
Single Column	$20 per page

Base page rate above includes:

- Acknowledgement of material
- Data conversion, as necessary
- Editorial work
- Proofreading
- Updating the index
- Schedule as selected by you[8]
- Updating electronic versions[9] and online code
- Printing 5 copies

Base page rate above excludes:

Freight	**Actual freight**
State sales tax	**If applicable**
Graphics[10] & tabular[11] matter, per graphic or table	**$10**
Annual Administrative Support Fee[12]	**$475**
MyMunicode or online code	**Selections on page 6**

Electronic media options for Code of Ordinances (sent via download) [13]

❑ Folio Bound Views	**$295 initially then $100 per update**
❑ WORD (DOCX)	**$150 initially then $75 per update**
❑ Adobe PDF of the code	**$150 initially then $75 per update**
❑ Adobe PDF of each supplement	**$150 initially then $75 per update**

Payment for Supplements and Additional Services:

- Invoices will be submitted upon shipment of project(s).

---

[7] All prices quoted in this section may be increased annually in accordance with the Consumer Price Index – Bureau of Labor Statistics.
[8] Schedule for supplements can be weekly, bi-weekly, monthly, bi-monthly, quarterly, tri-annual, semi-annual, annual or upon authorization. Electronic updates can occur more frequently than printed supplements.
[9] We do not charge a per page rate for updating the internet; however, a handling fee is charged for PDF, Word, Folio or additional electronic media items ordered.
[10] Includes printing of all copies. Additional fees will apply if graphics are printed in color.
[11] Tabular matter is defined as tables, algebraic formula, or other materials that require special programs or extra editorial time to modify and prepare for inclusion in an update.
[12] We will work with your budget cycle to establish the billing month for the Administrative Support Fee.
[13] "delivery" is defined as making updated electronic data available to you via download or FTP. Fee applies whenever content is delivered as PDF, Folio or Word, via one of the aforementioned mediums.

Online Services Quotation Sheet

Please check the appropriate box(es) to indicate your selection. To learn more about our online services, you can participate in one of our free webinars here or view a pre-recorded version of the webinar here.

Services currently enrolled in:

- **MyMunicode**[14] includes: **$1,495 annually**
  MunicodeNEXT (Online Code), OrdBank, CodeBank, CodeBank Compare + eNotify[15]**, MuniPRO, and Custom Banner**

Optional services to add if MyMunicode is not selected:

- ☐ **OrdLink** Upgrade OrdBank by adding OrdLink for an additional $100 per year

MuniDocs – only select one option below for MuniDocs.

- ☐ MuniDocs (up to 25 documents per year updated quarterly) **$350**
- ☐ MuniDocs (up to 100 documents per year updated quarterly) **$750**
  - Additional documents, each with either option **$7.50**

(If MuniDocs is elected, please circle the list of categories and dated documents to be posted)

Minutes - Council Minutes - Committee Minutes – Agendas – Resolutions – Budgets - Other_____

Historical OrdBank linking can be provided prior to 2018 at $35 per ordinance received.

- ☐ Number or Ordinances _____ x $35 per ordinance.

Municode does not charge an extra fee to update the internet – this is included in your supplement rate.

[14] Municode does not charge a per page rate for updating the online code (Internet). Your per page supplement rate for the codification of new legislation is not affected by selecting our budget friendly and feature enriched MyMunicode bundle package.
[15] Enrollment in CodeBank is required in order to receive the CodeBank Compare/eNotify technology.

Scope of Services - Recodification

We will handle the publishing for your Code of Ordinances. This includes legal work, editing, page composition, proofreading, indexing, and delivering the information in print or via electronic copy. Hereinafter, unless specifically cited, a reference to "codes" or "the codes" includes the Municipal Code of Hattiesburg, Mississippi. We understand the scope of this project to include a complete recodification of the code, ongoing supplemental services and online hosting of the code. A summary of the recodification process is provided below.

Excellence

"The code update went far beyond my expectations. Everyone at Municode was nice to work with and always responded in a timely manner. Your customer service was outstanding. Thanks again for a very positive experience."
- Barron, WI

Recodification Project Leader: Julie Lovelace, Vice President of Code Department

Material

The following sections describe the nature of material included or excluded in the project, creation of a disposition list, and the methodology of adding material to the code.

Ordinances. All legislation of a general and permanent nature, passed in final form by you as of the cutoff date established by the Municode attorney (usually following delivery of the legal memorandum), will be included in the new code. We will rely upon the material (in print or electronic form) as furnished by you during the recodification process. All material that we receive will be acknowledged via e-mail, to establish a record of included ordinances. Legislation not of a general and permanent nature will be omitted from the code unless otherwise instructed by you. Examples include Appropriations; Franchises; Bonds; Vacating Streets and Other Public Properties; Sales of Surplus Assets and Properties; Tax Levies; Special Elections; Contracts and Agreements; Rezoning; Personnel Regulations; Annexations and Disannexations; Tax Anticipated Notes and Issuances of Similar Debt Instruments; Appointments of Named Individuals to Positions within a Governmental Body; Comprehensive Master Plans, Traffic Schedules, and Fee Schedules (however, fee schedules can be included for an additional fee – quotation upon request).

Attorney Analysis and Review of Material. We will assign a team, consisting of a lead attorney, legal editor, proofreader and indexer, to the project. All recommendations by our legal team are intended for use by your attorney and should not be considered legal advice. Our legal team is responsible for the following: We will research all legislation submitted by you against the State Constitution, State Law and the Charter; additionally, the ordinances are compared to other ordinances, in order to determine if there are any inconsistencies or conflicts within the legislation itself. Zoning and Land Use provisions will be reviewed only if included in the code. Ordinances enacted, or added, subsequent to the date of this agreement, or items not contemplated within the scope of service, may be added at an agreed upon page rate. We will suggest a structure and organization for the code and provide a table of contents indicating the recommended structure.

Page Format Options. We will review page composition format options, such as font type, font size, page layout, and graphics appearance and placement with you. We will help you choose a format that produces a professional document that is easily researched.

References. We will provide State Law references within the code. Editor's notes will be provided as appropriate. Internal references within the code will be hyperlinked in the online version.

Legal Memorandum. We will provide you and your staff with a user-friendly legal memorandum containing all of our analysis and recommendations. This memorandum will reflect our attorney's legal review and will provide you with recommended options intended to remove conflicts and inconsistencies; conform to state law, when appropriate; and ensure compliance with your charter. This approach facilitates collaboration and dissemination among departments, thus making the process as easy for you as possible. Our goal is to make the recodification process simple and smooth for you. From start to finish, we will work with you to complete the project as quickly and efficiently as possible.

Conference. Within 30 days of your receipt of the Legal Memorandum, we will conduct a conference, either in person, via telephone or webinar, to review the legal memorandum and recommendations. All interested personnel may be included; but your attorney and clerk are essential. Issues discovered during the legal research will be discussed at the conference, with the goal of the conference being to come to agreement on any required changes. Your attorney has the final decision-making authority for resolution of issues brought up at the conference or noted in the legal memorandum.

Implementation of Conference Decisions

Editing and Proofreading. Our team will edit the text of your code to reflect proper grammar and stylistic consistency. We will not reword any provision that changes the substantive intent of the code, unless you approve the revision.

However, non-substantive revisions to improve readability are a part of the process. We will proofread your code. The text will be reviewed for sense and structure and to ensure the implementation of the decisions by your attorney and our attorney.

Graphics, Index and Tables. Our team will create a hierarchical, subject matter index and all tables (contents, state law reference, prior code comparison, and ordinance disposition) for your code as necessitated by the materials provided. The creation of additional tables can be performed for an additional hourly fee. We will insert the graphics you have provided into the printed and electronic versions of the code. Manipulation, enhancement or reformatting of any graphic supplied by you can be performed for an additional hourly fee.

Post Conference Code Draft. After editing and proofreading, a post-conference Code Draft incorporating solutions agreed upon at the legal conference will be delivered in printable electronic format for final review prior to printing and shipping. We guarantee typographical correctness. Any errors attributable to our team will be corrected at no charge during the term of this agreement.

Adopting Ordinance. Our attorney will provide an adopting ordinance upon completion of the project.

Delivery of Code

Electronic Format and Delivery Options. Your new code can be delivered in PDF, DOCX, Folio or integrated with the dtSearch Engine on our MunicodeNEXT platform. Electronic delivery mediums include online posting and download.

Printing and Binding. We will print your code on acid-free paper in your chosen format. Color printing is available at an additional charge. Standard binding for the code is three-post, expandable, dark blue, hunter green, semi-bright black, burgundy, leatherette binders with gold, silver or white stamping. Alternate binders, such as D-ring or polyvinyl, are also available. A seal or logo can be added to the front cover and spine in addition to the text, for an additional charge, if desired. Divider tabs for each major section of the code and index are also provided.

Client Responsibility

Amendatory Legislation. Please forward all adopted legislation (including amendments, the Charter, Special Acts and other pertinent rules and regulations having the effect of law) to be codified on a continual basis. Submission should be timely and can be sent in electronic or printed form. Electronic submission is highly preferred.

Review Legal Memorandum. Please review the legal memorandum to ensure that it comports with your intentions and modify and/or approve the proposed table of contents and organization of the code, page format, font type and size, approve number of copies to be printed, binder colors and choice of electronic format and medium.

Participation of Attorney. Please ensure your attorney and other interested personnel attend and participate in the project, including on-site or teleconference and review of the code draft.

Submission of Data. Please provide data, graphics and tables of the highest reproducible quality, preferably in their original, electronic format. Provide a black and white line art seal or logo for the binders, if desired.

Draft Code. Please review and return the draft within thirty (30) days of receipt. To assist you in this endeavor, a post-conference memorandum will accompany the draft code to point out to you where changes and additions have been made. Any changes to the text should be marked directly on the draft and returned to us. Changes not discussed at the conference may result in a proof update fee.

Supplemental Updating

We will handle 100% of the publishing for your code. This includes editing, page composition, proofreading, indexing, and delivering the information as printed or via electronic copy. Supplementation will start upon completion of the recodification project on the schedule selected by the client.

Editorial Approach. We use a team approach to editing. This provides for consistency in editing, understanding and quality of work for you.

Ongoing Supplementation. Our goal is to meet and exceed the needs and expectations of our clients. Working with you and your staff, we will create whatever supplementation schedule will best serve you and your citizens.

municode

Municipal Code Corporation | P.O. Box 2235 Tallahassee, FL 32316
info@municode.com | 800.262.2633
www.municode.com

This proposal shall be valid for a period of ninety (90) days from the date appearing below unless signed and authorized by Municode and the Client.

Term of Agreement. This Agreement shall begin upon execution of this Agreement and end three years after the publication date of the new code. Thereafter, the supplement service shall be automatically renewed from year to year provided that each party may cancel or change this agreement with sixty (60) days written notice.

Submitted by:

MUNICIPAL CODE CORPORATION

Municode Officer: _____

Title: President

Date: July 26, 2018

Accepted by:

CITY OF HATTIESBURG, MISSISSIPPI

By: _____

Title: Mayor

Date: 8-7-18

City of Hattiesburg, MS

200 Forrest St.
P.O. Box 1898
Hattiesburg, MS 39401

Master

File Number: 2018-661

File ID:	2018-661	**Type:**	Regular Agenda Item	**Status:**	Policy Agenda
Version:	1	**Reference:**		**In Control:**	City Council
Requester:				**File Created:**	07/31/2018
Brief Title:	Fire protection agreement between the City of Hattiesburg and the University of Southern Mississippi,in the amount of $95,652.00.			**Final Action:**	08/07/2018
				Minute Book Number:	MB 2018-193

Title:

Authorize Mayor to execute Fire Protection Agreement between the City of Hattiesburg and the University of Southern Mississippi to provide fire protection and related services for a one (1) year term, beginning July 1,2018 and ending on June 30,2019, in the amount of $95,652.00.

Notes:			
		Agenda Date:	08/07/2018
Indexes:		**Agenda Number:**	VI.-10
Sponsors:		**Enactment Date:**	
Attachments:	Fire Protection Agreement - HFD_USM 2018-2019 (2), Executed - Fire Protection Agreement - HFD_USM 2018-2019 (2)	**Enactment Number:**	
Contact:		**Meeting Date:**	
Drafter:		**Effective Date:**	

History of Legislative File

Version:	Acting Body:	Date:	Action:	Sent To:	Due Date:	Return Date:	Result:
1	City Council	08/07/2018	Authorize				Pass

Action Text: A MOTION was made by Council Member Delgado and seconded by Council Member George to Authorize Mayor to execute Fire Protection Agreement between the City of Hattiesburg and the University of Southern Mississippi to provide fire protection and related services for a one (1) year term, beginning July 1,2018 and ending on June 30,2019, in the amount of $95,652.00.

There being no discussion, the Motion received the affirmative vote of the Council as follows:

Yeas: 5 - George, Delgado, Carroll, Dryden and Brown

Nays: 0

Yea: 5 Council Member George
Council Member Delgado
Council President Carroll
Council Vice President Dryden
Council Member Brown

Text of Legislative File 2018-661

Title

Authorize Mayor to execute Fire Protection Agreement between the City of Hattiesburg and the University of Southern Mississippi to provide fire protection and related services for a one (1) year term, beginning July 1,2018 and ending on June 30,2019, in the amount of $95,652.00.

Summary

Fire protection agreement services between the City of Hattiesburg and USM in the amount of $95,652.00.

Budget Information

Expenditure Type.

Purchasing Item

Publication Information

Hattiesburg Fire Department

Fire Chief Sherrocko Stewart

Assistant Chief Danny Wade

To: Dr. Christopher Crenshaw
Director of Physical Plant
The University of Southern Mississippi

From: Sherrocko Stewart
Fire Chief
Hattiesburg Fire Department

Re: Protection Agreement

Date: August 7, 2018

Dr. Crenshaw,

The one-year extension for the fire protection agreement between the University of Southern Mississippi and the City of Hattiesburg will expire on June 30, 2018. The City would like to request an extension of one year for the agreement, commencing July 1, 2018 and ending on June 30, 2019, continuing the current terms of the present agreement, including one annual payment by the University to the City for $95,652 by August 31, 2018.

Thank you for your consideration in this matter and we look forward to your response. If you have any questions please call.

Sincerely,

_____

Sherrocko Stewart

Fire Chief

Hattiesburg Fire Department

Administration: (601) 582-3311 Fire Prevention: (601) 545-6678
622 Corinne St. Hattiesburg, MS

FIRE PROTECTION AGREEMENT BY AND BETWEEN THE CITY OF HATTIESBURG AND THE UNIVERSITY OF SOUTHERN MISSISSIPPI

STATE OF MISSISSIPPI

COUNTY OF FORREST

THIS AGREEMENT is made and entered into on August 7, 2018, between the City of Hattiesburg (herein after also referred to as "City") and The University of Southern Mississippi (herein after also referred to as "University") for fire protection and related services.

RECITALS

1. The University of Southern Mississippi campus is a legally constituted fire district, created pursuant to the statutory laws of the State of Mississippi as evidenced by Ordinance No. 1687 of the City of Hattiesburg, adopted on August 19, 1970. (Mississippi Code Section 21-25-23)
2. It is the desire of the University that the City provide fire protection and related services to the aforesaid fire district to the same extent such protection and services are provided to the citizens of the City.
3. It has been determined that the City has the capability of providing the protection and services contemplated by the terms of this Agreement.
4. It is the desire of the parties to terminate all previous agreements relating to the providing of fire protection and related services to the University by the City.

AGREEMENT

1. Services: The City shall furnish to the University, fire protection and related services to the University to the same extent and at that same level provided to its Citizens.
2. Terms: The term of this Agreement shall be for one (1) years and shall commence on July 1, 2018 and shall terminate on June 30, 2019.
3. Consideration: During the term of this Agreement, the University shall pay unto the City an annual fee that is due by August 31 each year according to the following fees schedule: August 31, 2018: $95,652.00
4. Review and Adjustments: Annually and on or before the 1st day of May of each year of this Agreement, the protection and services being provided to the University by the City shall be reviewed by the University and appropriate members of the Hattiesburg Fire Department to determine whether or not there is any need to increase the level of services being provided by the City to meet some specialized need of the University. If it is determined that there is a need to increase the level of services being provided to the University or if it is determined that there exists a specialized need by the University for fire protection, then and in that event, the annual fee herein provided shall be adjusted to compensate the City for the increased level of services or meeting the specialized needs of the University.
5. Related Services: The City shall provide support for all emergency situations on the University campus, including but not limited to incidents of hazardous waste spills and cleanup, persons trapped in elevators, concerts, and other events of public safety concerns. The University agrees to replace all materials used by the City in addressing any hazardous waste spill occurring on campus.
6. Communications: The University shall provide and maintain fire alarms, telephone lines and radio frequencies in order to establish more efficient communications between the Hattiesburg Fire Department and the University personnel at the Physical Plant Department and the Campus Police.
7. Fire Protection Systems: The University shall be responsible for maintenance and/or replacement of all fire extinguishers, sprinkler systems, water mains and fire hydrants, and fire flow infrastructure located on campus and under its dominion and control consistent with established standards; and provide the City with a current map detailing the location of all hydrants, valves and water mains.

8. Fire Prevention and Fire Safety Education: The University Safety Department shall have primary responsibility for fire and safety inspections of all University buildings and for fire safety education on campus. The Chief of Fire Prevention of the City of Hattiesburg shall provide technical support for life and property safety on campus. The Director of the Physical Plant of the University or a representative will serve as the primary liaison officer between the University and the Fire Prevention Office of the City of Hattiesburg Fire Department.
9. Emergency Response: In all situations of emergency nature other than law enforcement and emergency medical response, the City of Hattiesburg Fire Chief or his representative shall be the officer in charge. The University agrees to provide support services from the Physical Plant Department and Campus Police to insure order and public safety during such emergencies.
10. Entire Agreement and Binding Effect: This Agreement constitutes the entire Agreement between the City and University. No prior written, contemplation, subsequent oral promises or representations shall be binding. This Agreement shall not be amended or changed except by written instrument signed by all parties hereto. Captions herein are for the convenience of the parties only and neither limit nor expand the intent, purpose or meaning of this Agreement.

IN WITNESS WHERE, the parties have executed this Agreement as of the date and year first above written,

City of Hattiesburg, MS

By: _____

Mayor

Attest

By: _____

City Clerk

The University of Southern Mississippi

By: _____

Vice President for Finance and Administration

FIRE PROTECTION AGREEMENT BY AND BETWEEN THE CITY OF HATTIESBURG AND THE UNIVERSITY OF SOUTHERN MISSISSIPPI

STATE OF MISSISSIPPI

COUNTY OF FORREST

THIS AGREEMENT is made and entered into on August 7, 2018, between the City of Hattiesburg (herein after also referred to as "City") and The University of Southern Mississippi (herein after also referred to as "University") for fire protection and related services.

RECITALS

1. The University of Southern Mississippi campus is a legally constituted fire district, created pursuant to the statutory laws of the State of Mississippi as evidenced by Ordinance No. 1687 of the City of Hattiesburg, adopted on August 19, 1970. (Mississippi Code Section 21-25-23)
2. It is the desire of the University that the City provide fire protection and related services to the aforesaid fire district to the same extent such protection and services are provided to the citizens of the City.
3. It has been determined that the City has the capability of providing the protection and services contemplated by the terms of this Agreement.
4. It is the desire of the parties to terminate all previous agreements relating to the providing of fire protection and related services to the University by the City.

AGREEMENT

1. Services: The City shall furnish to the University, fire protection and related services to the University to the same extent and at that same level provided to its Citizens.
2. Terms: The term of this Agreement shall be for one (1) years and shall commence on July 1, 2018 and shall terminate on June 30, 2019.
3. Consideration: During the term of this Agreement, the University shall pay unto the City an annual fee that is due by August 31 each year according to the following fees schedule: August 31, 2018: $95,652.00
4. Review and Adjustments: Annually and on or before the 1st day of May of each year of this Agreement, the protection and services being provided to the University by the City shall be reviewed by the University and appropriate members of the Hattiesburg Fire Department to determine whether or not there is any need to increase the level of services being provided by the City to meet some specialized need of the University. If it is determined that there is a need to increase the level of services being provided to the University or if it is determined that there exists a specialized need by the University for fire protection, then and in that event, the annual fee herein provided shall be adjusted to compensate the City for the increased level of services or meeting the specialized needs of the University.
5. Related Services: The City shall provide support for all emergency situations on the University campus, including but not limited to incidents of hazardous waste spills and cleanup, persons trapped in elevators, concerts, and other events of public safety concerns. The University agrees to replace all materials used by the City in addressing any hazardous waste spill occurring on campus.
6. Communications: The University shall provide and maintain fire alarms, telephone lines and radio frequencies in order to establish more efficient communications between the Hattiesburg Fire Department and the University personnel at the Physical Plant Department and the Campus Police.
7. Fire Protection Systems: The University shall be responsible for maintenance and/or replacement of all fire extinguishers, sprinkler systems, water mains and fire hydrants, and fire flow infrastructure located on campus and under its dominion and control consistent with established standards; and provide the City with a current map detailing the location of all hydrants, valves and water mains.

8. Fire Prevention and Fire Safety Education: The University Safety Department shall have primary responsibility for fire and safety inspections of all University buildings and for fire safety education on campus. The Chief of Fire Prevention of the City of Hattiesburg shall provide technical support for life and property safety on campus. The Director of the Physical Plant of the University or a representative will serve as the primary liaison officer between the University and the Fire Prevention Office of the City of Hattiesburg Fire Department.
9. Emergency Response: In all situations of emergency nature other than law enforcement and emergency medical response, the City of Hattiesburg Fire Chief or his representative shall be the officer in charge. The University agrees to provide support services from the Physical Plant Department and Campus Police to insure order and public safety during such emergencies.
10. Entire Agreement and Binding Effect: This Agreement constitutes the entire Agreement between the City and University. No prior written, contemplation, subsequent oral promises or representations shall be binding. This Agreement shall not be amended or changed except by written instrument signed by all parties hereto. Captions herein are for the convenience of the parties only and neither limit nor expand the intent, purpose or meaning of this Agreement.

IN WITNESS WHERE, the parties have executed this Agreement as of the date and year first above written,

City of Hattiesburg, MS

By: _____
Mayor

Attest

By: _____
City Clerk

The University of Southern Mississippi

By: _____
Vice President for Finance and Administration

City of Hattiesburg, MS

200 Forrest St.
P.O. Box 1898
Hattiesburg, MS 39401

Master

File Number: 2018-663

File ID:	2018-663	**Type:**	Regular Agenda Item	**Status:**	Policy Agenda
Version:	1	**Reference:**		**In Control:**	City Council
Requester:				**File Created:**	07/31/2018
Brief Title:	Security services agreement with Global Security for Parks and Recreation various events.			**Final Action:**	08/07/2018
				Minute Book Number:	MB 2018-163

Title:

Authorize Mayor to execute duplicate contract between the City of Hattiesburg Parks and Recreation Department and Global Security Company, to provide security services for various Parks and Recreation programs,events,or activities.

Notes:			
		Agenda Date:	08/07/2018
Indexes:		**Agenda Number:**	VI.-11
Sponsors:		**Enactment Date:**	
Attachments:	Global Security Agreement, Global-Insurance, Executed - Global Security Agreement for security services	**Enactment Number:**	
Contact:		**Meeting Date:**	
Drafter:		**Effective Date:**	

History of Legislative File

Version:	Acting Body:	Date:	Action:	Sent To:	Due Date:	Return Date:	Result:
1	City Council	08/07/2018	Authorize				Pass

Action Text: A MOTION was made by Council Vice President Dryden and seconded by Council Member George to Authorize Mayor to execute duplicate contract between the City of Hattiesburg Parks and Recreation Department and Global Security Company, to provide security services for various Parks and Recreation programs, events, or activities.

There being no discussion, the Motion received the affirmative vote of the Council as follows:

Yeas: 5 - George, Delgado, Carroll, Dryden and Brown

Nays: 0

Yea: 5 Council Member George
Council Member Delgado
Council President Carroll
Council Vice President Dryden
Council Member Brown

Text of Legislative File 2018-663

Title

Authorize Mayor to execute duplicate contract between the City of Hattiesburg Parks and Recreation Department and Global Security Company, to provide security services for various Parks and Recreation programs,events,or activities.

Summary

Security services agreement with Global Security for Parks and Recreation various events.

Budget Information

Expenditure Type

Purchasing Item

Publication Information

STATE OF MISSISSIPPI

COUNTY OF FORREST

AGREEMENT

WHEREAS, the City of Hattiesburg, Parks and Recreation Department, hereinafter referred to as "City", and Global Security Investigators, hereinafter referred to as "Contractor", desire to reduce to writing their agreement of understanding with a properly executed copy of agreement provided to each party. City and Contractor do hereby agree and obligate themselves as follows: to-wit:

I. Scope of Work

Contractor shall provide uniformed armed and un-armed security services as necessary for the City at various Parks and Recreation Department programs/events. City shall coordinate with Contractor specific coverage needs as programming requires.

II. Location & Scheduling

Contractor hereby agrees to furnish the City with necessary uniformed armed and un-armed security personnel as required so long as both parties are in agreement. The location of the security detail will be based on programming schedule. The shifts, hours, days, and/or dates will be designated by the City. Any changes to the scheduled hours are to be submitted by the City to the Contractor at least twenty-four (24) hours prior to change taking place. Scheduling of security personnel for the designated shifts will be done by the Security Supervisor of Contractor.

III. Rates & Fees

The hourly rate for each security guard will be Eighteen Dollars ($18.00) per hour for each Un-armed guard and Twenty Dollars ($20.00) per hour for each Armed guard. If a security guard must appear for court for any incident that occurs while working this assignment, the Un-Armed hourly rate of Eighteen Dollars ($18.00) per hour will be charged.

IV. Liability Insurance & Permits

Contractor shall provide a copy of their Liability Insurance Policy in an amount not less than One-Million Dollars ($1,000,000.00) and list the City as additionally insured. Contractor shall also provide to the City, with respect to each security employee, a copy of their Hattiesburg Police Department Private Security & Investigator Certificate of Permit. Contractor and all security employees shall meet all necessary requirements pertaining to City of Hattiesburg Ordinance #2380, Private Security Ordinance of the City of Hattiesburg. Contractor shall also provide to the City, with respect to each security employee, a copy of State of Mississippi issued firearms permit provided the applicant shall carry a firearm in the performance of contract. Contractor shall ensure all security guards have undergone a thorough criminal background check, including sex offender registry, and drug testing.

V. Term of Contract

Term of Contract shall be for a period of twelvex twelve (12) months beginning August1, 2018 and ending July 31, 2019.

VI. Security Guard Requirements

All guards shall be in complete uniform and well-groomed at all times. All guards must have a minimum of two years' experience as a security guard, or two years' experience in a branch of law enforcement or other type of protective service. Security guards shall report to detail location on time and not vacate their post until end of assigned shift. Contractor shall maintain a sufficient pool of qualified guards large enough that if, for any reason, the scheduled guard does not report for duty or must be replaced, the security company can provide a replacement within two hours notification. Contractor agrees not to employ or to solicit for employment with regard to City of Hattiesburg Security Details, any persons in the full-time or part-time employment of the City of Hattiesburg. To the fullest extent allowed by law, Contractor shall indemnify, defend, save and hold harmless, protect, and exonerate the City of Hattiesburg, its commissioners, board members, officers, employees, agents, and

representatives from and against all claims, demands, liabilities, suits, actions damages, losses, and costs of every kind and nature whatsoever including without limitation, court costs, investigative fees and expenses, and attorney's fees, arising out of or caused by Contractor and/or its partners, principals, agents and/or employees in the performance of or failure to perform this agreement.

VII. Security Detail Responsibilities

Contractor shall not assign, subcontract, or otherwise transfer this agreement in whole or in part to third party. Security services to be provided during detail include, but are not limited to, conducting security patrols of City property at parks, community centers, offices, gymnasiums, parking lots, or other City property as detail is assigned. Security guard shall report to City of Hattiesburg event staff/employee when arriving to facility for detail and stay in communication with City Staff during detail. Security guard shall maintain security/activity log of shifts, and provide copies to City of Hattiesburg upon request. Contractor shall notify Hattiesburg Police Department/911 immediately for all threats of violence or elevated security occurrences.

Allen Haralson 31July18

Allen Haralson, Jr, Global Security Date

_____ _____

Mayor Toby Barker, City of Hattiesburg Date

_____ _____

Kermas Eaton, City Clerk Date

ALLEN-4 OP ID: DT10

CERTIFICATE OF LIABILITY INSURANCE

DATE (MM/DD/YYYY) 07/23/2018

THIS CERTIFICATE IS ISSUED AS A MATTER OF INFORMATION ONLY AND CONFERS NO RIGHTS UPON THE CERTIFICATE HOLDER. THIS CERTIFICATE DOES NOT AFFIRMATIVELY OR NEGATIVELY AMEND, EXTEND OR ALTER THE COVERAGE AFFORDED BY THE POLICIES BELOW. THIS CERTIFICATE OF INSURANCE DOES NOT CONSTITUTE A CONTRACT BETWEEN THE ISSUING INSURER(S), AUTHORIZED REPRESENTATIVE OR PRODUCER, AND THE CERTIFICATE HOLDER.

IMPORTANT: If the certificate holder is an ADDITIONAL INSURED, the policy(ies) must be endorsed. If SUBROGATION IS WAIVED, subject to the terms and conditions of the policy, certain policies may require an endorsement. A statement on this certificate does not confer rights to the certificate holder in lieu of such endorsement(s).

PRODUCER
The Policy Center, Inc
825 Larson Street
Jackson, MS 39202
Dorian Taylor

CONTACT NAME: Dorian Taylor
PHONE (A/C, No, Ext): 601-372-9536 FAX (A/C, No): 601-346-8477
E-MAIL ADDRESS:

INSURER(S) AFFORDING COVERAGE	NAIC #
INSURER A : BURLINGTON INSURANCE	
INSURER B :	
INSURER C :	
INSURER D :	
INSURER E :	
INSURER F :	

INSURED
ALLEN HARRELSON
GLOBAL SECURITY co
495 EATONVILLE RD
HATTIESBURG, MS 39041

COVERAGES CERTIFICATE NUMBER: REVISION NUMBER:

THIS IS TO CERTIFY THAT THE POLICIES OF INSURANCE LISTED BELOW HAVE BEEN ISSUED TO THE INSURED NAMED ABOVE FOR THE POLICY PERIOD INDICATED. NOTWITHSTANDING ANY REQUIREMENT, TERM OR CONDITION OF ANY CONTRACT OR OTHER DOCUMENT WITH RESPECT TO WHICH THIS CERTIFICATE MAY BE ISSUED OR MAY PERTAIN, THE INSURANCE AFFORDED BY THE POLICIES DESCRIBED HEREIN IS SUBJECT TO ALL THE TERMS, EXCLUSIONS AND CONDITIONS OF SUCH POLICIES. LIMITS SHOWN MAY HAVE BEEN REDUCED BY PAID CLAIMS.

INSR LTR	TYPE OF INSURANCE	ADDL INSD	SUBR WVD	POLICY NUMBER	POLICY EFF (MM/DD/YYYY)	POLICY EXP (MM/DD/YYYY)	LIMITS	
A	X COMMERCIAL GENERAL LIABILITY			883B002613	07/14/2018	07/14/2019	EACH OCCURRENCE	$ 1,000,000
	CLAIMS-MADE X OCCUR						DAMAGE TO RENTED PREMISES (Ea occurrence)	$ 100,000
							MED EXP (Any one person)	$ 5,000
							PERSONAL & ADV INJURY	$ EXCL
	GEN'L AGGREGATE LIMIT APPLIES PER:						GENERAL AGGREGATE	$ 1,000,000
	POLICY PRO-JECT LOC						PRODUCTS - COMP/OP AGG	$ INCLUDED
	OTHER:							$
	AUTOMOBILE LIABILITY						COMBINED SINGLE LIMIT (Ea accident)	$
	ANY AUTO						BODILY INJURY (Per person)	$
	ALL OWNED AUTOS / SCHEDULED AUTOS						BODILY INJURY (Per accident)	$
	HIRED AUTOS / NON-OWNED AUTOS						PROPERTY DAMAGE (Per accident)	$
								$
	UMBRELLA LIAB / OCCUR						EACH OCCURRENCE	$
	EXCESS LIAB / CLAIMS-MADE						AGGREGATE	$
	DED RETENTION $							$
	WORKERS COMPENSATION AND EMPLOYERS' LIABILITY						PER STATUTE / OTH-ER	
	ANY PROPRIETOR/PARTNER/EXECUTIVE OFFICER/MEMBER EXCLUDED? Y / N	N / A					E.L. EACH ACCIDENT	$
	(Mandatory in NH) If yes, describe under DESCRIPTION OF OPERATIONS below						E.L. DISEASE - EA EMPLOYEE	$
							E.L. DISEASE - POLICY LIMIT	$

DESCRIPTION OF OPERATIONS / LOCATIONS / VEHICLES (ACORD 101, Additional Remarks Schedule, may be attached if more space is required)

CERTIFICATE HOLDER

CITY OF HATTIESBURG
PO BOX 1898
HATTIESBURG, MS 39403

CANCELLATION

SHOULD ANY OF THE ABOVE DESCRIBED POLICIES BE CANCELLED BEFORE THE EXPIRATION DATE THEREOF, NOTICE WILL BE DELIVERED IN ACCORDANCE WITH THE POLICY PROVISIONS.

AUTHORIZED REPRESENTATIVE

Dorian Taylor

© 1988-2014 ACORD CORPORATION. All rights reserved.

The ACORD name and logo are registered marks of ACORD

STATE OF MISSISSIPPI

COUNTY OF FORREST

AGREEMENT

WHEREAS, the City of Hattiesburg, Parks and Recreation Department, hereinafter referred to as "City", and Global Security Investigators, hereinafter referred to as "Contractor", desire to reduce to writing their agreement of understanding with a properly executed copy of agreement provided to each party. City and Contractor do hereby agree and obligate themselves as follows: to-wit:

I. Scope of Work

Contractor shall provide uniformed armed and un-armed security services as necessary for the City at various Parks and Recreation Department programs/events. City shall coordinate with Contractor specific coverage needs as programming requires.

II. Location & Scheduling

Contractor hereby agrees to furnish the City with necessary uniformed armed and un-armed security personnel as required so long as both parties are in agreement. The location of the security detail will be based on programming schedule. The shifts, hours, days, and/or dates will be designated by the City. Any changes to the scheduled hours are to be submitted by the City to the Contractor at least twenty-four (24) hours prior to change taking place. Scheduling of security personnel for the designated shifts will be done by the Security Supervisor of Contractor.

III. Rates & Fees

The hourly rate for each security guard will be Eighteen Dollars ($18.00) per hour for each Un-armed guard and Twenty Dollars ($20.00) per hour for each Armed guard. If a security guard must appear for court for any incident that occurs while working this assignment, the Un-Armed hourly rate of Eighteen Dollars ($18.00) per hour will be charged.

IV. Liability Insurance & Permits

Contractor shall provide a copy of their Liability Insurance Policy in an amount not less than One-Million Dollars ($1,000,000.00) and list the City as additionally insured. Contractor shall also provide to the City, with respect to each security employee, a copy of their Hattiesburg Police Department Private Security & Investigator Certificate of Permit. Contractor and all security employees shall meet all necessary requirements pertaining to City of Hattiesburg Ordinance #2380, Private Security Ordinance of the City of Hattiesburg. Contractor shall also provide to the City, with respect to each security employee, a copy of State of Mississippi issued firearms permit provided the applicant shall carry a firearm in the performance of contract. Contractor shall ensure all security guards have undergone a thorough criminal background check, including sex offender registry, and drug testing.

V. Term of Contract

Term of Contract shall be for a period of twelvex twelve (12) months beginning August1, 2018 and ending July 31, 2019.

VI. Security Guard Requirements

All guards shall be in complete uniform and well-groomed at all times. All guards must have a minimum of two years' experience as a security guard, or two years' experience in a branch of law enforcement or other type of protective service. Security guards shall report to detail location on time and not vacate their post until end of assigned shift. Contractor shall maintain a sufficient pool of qualified guards large enough that if, for any reason, the scheduled guard does not report for duty or must be replaced, the security company can provide a replacement within two hours notification. Contractor agrees not to employ or to solicit for employment with regard to City of Hattiesburg Security Details, any persons in the full-time or part-time employment of the City of Hattiesburg. To the fullest extent allowed by law, Contractor shall indemnify, defend, save and hold harmless, protect, and exonerate the City of Hattiesburg, its commissioners, board members, officers, employees, agents, and

representatives from and against all claims, demands, liabilities, suits, actions damages, losses, and costs of every kind and nature whatsoever including without limitation, court costs, investigative fees and expenses, and attorney's fees, arising out of or caused by Contractor and/or its partners, principals, agents and/or employees in the performance of or failure to perform this agreement.

VII. Security Detail Responsibilities

Contractor shall not assign, subcontract, or otherwise transfer this agreement in whole or in part to third party. Security services to be provided during detail include, but are not limited to, conducting security patrols of City property at parks, community centers, offices, gymnasiums, parking lots, or other City property as detail is assigned. Security guard shall report to City of Hattiesburg event staff/employee when arriving to facility for detail and stay in communication with City Staff during detail. Security guard shall maintain security/activity log of shifts, and provide copies to City of Hattiesburg upon request. Contractor shall notify Hattiesburg Police Department/911 immediately for all threats of violence or elevated security occurrences.

Allen Haralson
Allen Haralson, Jr, Global Security

31July18
Date

Mayor Toby Barker, City of Hattiesburg

8-7-18
Date

Kermas Eaton, City Clerk

8-7-18
Date

City of Hattiesburg, MS

200 Forrest St.
P.O. Box 1898
Hattiesburg, MS 39401

Master

File Number: 2018-660

File ID:	2018-660	**Type:**	Regular Agenda Item	**Status:**	Passed
Version:	1	**Reference:**		**In Control:**	City Council
Requester:	Lamar Rutland			**File Created:**	07/30/2018
Brief Title:	Approve Professional Services Agreement with Shows, Dearman & Waits, Inc. for engineering services related to improvements to the city owned water system in the Audubon-Westwood & Lynwood Neighborhoods, Shadow Wood Drive & Huckleberry Lane.			**Final Action:**	08/07/2018
				Minute Book Number:	MB 2018-194

Title:

Approve Professional Services Agreement with Shows, Dearman & Waits, Inc. for engineering services related to improvements to the city owned water system in the Audubon-Westwood & Lynwood Neighborhoods, Shadow Wood Drive & Huckleberry Lane; Authorize Mayor to execute in duplicate.

Notes:			
		Agenda Date:	08/07/2018
Indexes:		**Agenda Number:**	VI.-12
Sponsors:		**Enactment Date:**	
Attachments:	11275_Proposal Packet (003), Executed - Agreement with Shows, Dearman & Waits, Inc., for engineering services related to improvements to city owned water system/Sudubon-Westwood & Lynwood, Shadow Wood Drive & Huckleberry Lane	**Enactment Number:**	
Contact:		**Meeting Date:**	08/07/2018
Drafter:	Sharon Waits	**Effective Date:**	

History of Legislative File

Version:	Acting Body:	Date:	Action:	Sent To:	Due Date:	Return Date:	Result:
1	City Council	08/07/2018	Approve				Pass

Action Text: A MOTION was made by Council Vice President Dryden and seconded by Council Member George to Approve Professional Services Agreement with Shows, Dearman & Waits, Inc. for engineering services related to improvements to the city owned water system in the Audubon-Westwood & Lynwood Neighborhoods, Shadow Wood Drive & Huckleberry Lane; Authorize Mayor to execute in duplicate.

There being no discussion, the Motion received the affirmative vote of the Council as follows:

Yeas: 5 - George, Delgado, Carroll, Dryden and Brown

Nays: 0

Yea: 5 Council Member George
Council Member Delgado
Council President Carroll
Council Vice President Dryden
Council Member Brown

Text of Legislative File 2018-660

Title

Approve Professional Services Agreement with Shows, Dearman & Waits, Inc. for engineering services related to improvements to the city owned water system in the Audubon-Westwood & Lynwood Neighborhoods, Shadow Wood Drive & Huckleberry Lane; Authorize Mayor to execute in duplicate.

Summary

Approve Professional Services Agreement with Shows, Dearman & Waits, Inc. for engineering services related to improvements to the city owned water system in the Audubon-Westwood & Lynwood Neighborhoods, Shadow Wood Drive & Huckleberry Lane; Authorize Mayor to execute in duplicate.

Budget Information

Fund 075 Water & Sewer Construction

This document has important legal consequences; consultation with an attorney is encouraged with respect to its use or modification. This document should be adapted to the particular circumstances of the contemplated Project and the controlling Laws and Regulations.

AGREEMENT
BETWEEN OWNER AND ENGINEER
FOR PROFESSIONAL SERVICES

Prepared by

EJCDC®
ENGINEERS JOINT CONTRACT DOCUMENTS COMMITTEE

Issued and Published Jointly by

ACEC
AMERICAN COUNCIL OF ENGINEERING COMPANIES

ASCE
AMERICAN SOCIETY OF CIVIL ENGINEERS

National Society of Professional Engineers®

EJCDC® E-500, Agreement Between Owner and Engineer for Professional Services.
Copyright © 2014 National Society of Professional Engineers, American Council of Engineering Companies, and American Society of Civil Engineers. All rights reserved.

This Agreement has been prepared for use with EJCDC® C-700, Standard General Conditions of the Construction Contract, 2013 Edition. Their provisions are interrelated, and a change in one may necessitate a change in the other. For guidance on the completion and use of this Agreement, see EJCDC® E-001, Commentary on the EJCDC Engineering Services Agreements, 2013 Edition.

Copyright © 2014:

National Society of Professional Engineers

1420 King Street, Alexandria, VA 22314-2794

(703) 684-2882

www.nspe.org

American Council of Engineering Companies

1015 15th Street N.W., Washington, DC 20005

(202) 347-7474

www.acec.org

American Society of Civil Engineers

1801 Alexander Bell Drive, Reston, VA 20191-4400

(800) 548-2723

www.asce.org

The copyright for this EJCDC document is owned jointly by the three sponsoring organizations listed above. The National Society of Professional Engineers is the Copyright Administrator for the EJCDC documents; please direct all inquiries regarding EJCDC copyrights to NSPE.

NOTE: EJCDC publications may be purchased at www.ejcdc.org, or from any of the sponsoring organizations above.

TABLE OF CONTENTS

Page

ARTICLE 1 – SERVICES OF ENGINEER 1
1.01 Scope 1

ARTICLE 2 – OWNER'S RESPONSIBILITIES 1
2.01 General 1

ARTICLE 3 – SCHEDULE FOR RENDERING SERVICES 2
3.01 Commencement 2
3.02 Time for Completion 2

ARTICLE 4 – INVOICES AND PAYMENTS 2
4.01 Invoices 2
4.02 Payments 2

ARTICLE 5 – OPINIONS OF COST 3
5.01 Opinions of Probable Construction Cost 3
5.02 Designing to Construction Cost Limit 3
5.03 Opinions of Total Project Costs 3

ARTICLE 6 – GENERAL CONSIDERATIONS 4
6.01 Standards of Performance 4
6.02 Design Without Construction Phase Services 5
6.03 Use of Documents 6
6.04 Electronic Transmittals 6
6.05 Insurance 7
6.06 Suspension and Termination 8
6.07 Controlling Law 9
6.08 Successors, Assigns, and Beneficiaries 9
6.09 Dispute Resolution 10
6.10 Environmental Condition of Site 10
6.11 Indemnification and Mutual Waiver 11
6.12 Records Retention 12
6.13 Miscellaneous Provisions 12

ARTICLE 7 – DEFINITIONS 12
7.01 Defined Terms 12

ARTICLE 8 – EXHIBITS AND SPECIAL PROVISIONS 16
8.01 Exhibits Included: 16
8.02 Total Agreement 17
8.03 Designated Representatives 17
8.04 Engineer's Certifications 17

Copyright © 2014 National Society of Professional Engineers, American Council of Engineering Companies, and American Society of Civil Engineers. All rights reserved.

AGREEMENT
BETWEEN OWNER AND ENGINEER
FOR PROFESSIONAL SERVICES

THIS IS AN AGREEMENT effective as of July 6, 2018 ("Effective Date") between

the City of Hattiesburg ("Owner") and

Shows, Dearman and Waits, Inc. ("Engineer").

Owner's Project, of which Engineer's services under this Agreement are a part, is generally identified as follows:

The construction of improvements to the city owned water system in the area containing Ridgeway Lane, Evergreen Lane, Pineview Drive, Woodhaven Drive, 1st Terrace, 2nd Terrace, 3rd Terrace, Shadow Wood Drive, and Huckleberry Lane. The improvements will consist of updating existing infrastructure. ("Project").

Other terms used in this Agreement are defined in Article 7.

Engineer's services under this Agreement are generally identified as follows: See Exhibit A

Owner and Engineer further agree as follows:

ARTICLE 1 – SERVICES OF ENGINEER

1.01 *Scope*

A. Engineer shall provide, or cause to be provided, the services set forth herein and in Exhibit A.

ARTICLE 2 – OWNER'S RESPONSIBILITIES

2.01 *General*

A. Owner shall have the responsibilities set forth herein and in Exhibit B.

B. Owner shall pay Engineer as set forth in Article 4 and Exhibit C.

C. Owner shall be responsible for all requirements and instructions that it furnishes to Engineer pursuant to this Agreement, and for the accuracy and completeness of all programs, reports, data, and other information furnished by Owner to Engineer pursuant to this Agreement. Engineer may use and rely upon such requirements, programs, instructions, reports, data, and information in performing or furnishing services under this Agreement, subject to any express limitations or reservations applicable to the furnished items.

D. Owner shall give prompt written notice to Engineer whenever Owner observes or otherwise becomes aware of:

1. any development that affects the scope or time of performance of Engineer's services;

Copyright © 2014 National Society of Professional Engineers, American Council of Engineering Companies, and American Society of Civil Engineers. All rights reserved.

2. the presence at the Site of any Constituent of Concern; or

3. any relevant, material defect or nonconformance in: (a) Engineer's services, (b) the Work, (c) the performance of any Constructor, or (d) Owner's performance of its responsibilities under this Agreement.

ARTICLE 3 – SCHEDULE FOR RENDERING SERVICES

3.01 *Commencement*

A. Engineer is authorized to begin rendering services as of the Effective Date.

3.02 *Time for Completion*

A. Engineer shall complete its obligations within a reasonable time. Specific periods of time for rendering services, or specific dates by which services are to be completed, are provided in Exhibit A, and are hereby agreed to be reasonable.

B. If, through no fault of Engineer, such periods of time or dates are changed, or the orderly and continuous progress of Engineer's services is impaired, or Engineer's services are delayed or suspended, then the time for completion of Engineer's services, and the rates and amounts of Engineer's compensation, shall be adjusted equitably.

C. If Owner authorizes changes in the scope, extent, or character of the Project or Engineer's services, then the time for completion of Engineer's services, and the rates and amounts of Engineer's compensation, shall be adjusted equitably.

D. Owner shall make decisions and carry out its other responsibilities in a timely manner so as not to delay the Engineer's performance of its services.

E. If Engineer fails, through its own fault, to complete the performance required in this Agreement within the time set forth, as duly adjusted, then Owner shall be entitled, as its sole remedy, to the recovery of direct damages, if any, resulting from such failure.

ARTICLE 4 – INVOICES AND PAYMENTS

4.01 *Invoices*

A. *Preparation and Submittal of Invoices:* Engineer shall prepare invoices in accordance with its standard invoicing practices and the terms of Exhibit C. Engineer shall submit its invoices to Owner on a monthly basis. Invoices are due and payable within 30 days of receipt.

4.02 *Payments*

A. *Application to Interest and Principal:* Payment will be credited first to any interest owed to Engineer and then to principal.

B. *Failure to Pay*: If Owner fails to make any payment due Engineer for services and expenses within 45 days after receipt of Engineer's invoice, then:

Copyright © 2014 National Society of Professional Engineers, American Council of Engineering Companies, and American Society of Civil Engineers. All rights reserved.

1. amounts due Engineer will be increased at the rate of 1.5% per month (or the maximum rate of interest permitted by law, if less) from said forty-fifth day; and

2. Engineer may, after giving seven days written notice to Owner, suspend services under this Agreement until Owner has paid in full all amounts due for services, expenses, and other related charges. Owner waives any and all claims against Engineer for any such suspension.

C. *Disputed Invoices:* If Owner disputes an invoice, either as to amount or entitlement, then Owner shall promptly advise Engineer in writing of the specific basis for doing so, may withhold only that portion so disputed, and must pay the undisputed portion subject to the terms of Paragraph 4.01.

D. *Sales or Use Taxes:* If after the Effective Date any governmental entity takes a legislative action that imposes additional sales or use taxes on Engineer's services or compensation under this Agreement, then Engineer may invoice such additional sales or use taxes for reimbursement by Owner. Owner shall reimburse Engineer for the cost of such invoiced additional sales or use taxes; such reimbursement shall be in addition to the compensation to which Engineer is entitled under the terms of Exhibit C.

ARTICLE 5 – OPINIONS OF COST

5.01 *Opinions of Probable Construction Cost*

A. Engineer's opinions (if any) of probable Construction Cost are to be made on the basis of Engineer's experience, qualifications, and general familiarity with the construction industry. However, because Engineer has no control over the cost of labor, materials, equipment, or services furnished by others, or over contractors' methods of determining prices, or over competitive bidding or market conditions, Engineer cannot and does not guarantee that proposals, bids, or actual Construction Cost will not vary from opinions of probable Construction Cost prepared by Engineer. If Owner requires greater assurance as to probable Construction Cost, then Owner agrees to obtain an independent cost estimate.

5.02 *Designing to Construction Cost Limit*

A. If a Construction Cost limit is established between Owner and Engineer, such Construction Cost limit and a statement of Engineer's rights and responsibilities with respect thereto will be specifically set forth in Exhibit F to this Agreement.

5.03 *Opinions of Total Project Costs*

A. The services, if any, of Engineer with respect to Total Project Costs shall be limited to assisting the Owner in tabulating the various categories that comprise Total Project Costs. Engineer assumes no responsibility for the accuracy of any opinions of Total Project Costs.

Copyright © 2014 National Society of Professional Engineers, American Council of Engineering Companies, and American Society of Civil Engineers. All rights reserved.

ARTICLE 6 – GENERAL CONSIDERATIONS

6.01 *Standards of Performance*

A. *Standard of Care:* The standard of care for all professional engineering and related services performed or furnished by Engineer under this Agreement will be the care and skill ordinarily used by members of the subject profession practicing under similar circumstances at the same time and in the same locality. Engineer makes no warranties, express or implied, under this Agreement or otherwise, in connection with any services performed or furnished by Engineer.

B. *Technical Accuracy:* Owner shall not be responsible for discovering deficiencies in the technical accuracy of Engineer's services. Engineer shall correct deficiencies in technical accuracy without additional compensation, unless such corrective action is directly attributable to deficiencies in Owner-furnished information.

C. *Consultants:* Engineer may retain such Consultants as Engineer deems necessary to assist in the performance or furnishing of the services, subject to reasonable, timely, and substantive objections by Owner.

D. *Reliance on Others:* Subject to the standard of care set forth in Paragraph 6.01.A, Engineer and its Consultants may use or rely upon design elements and information ordinarily or customarily furnished by others, including, but not limited to, specialty contractors, manufacturers, suppliers, and the publishers of technical standards.

E. *Compliance with Laws and Regulations, and Policies and Procedures:*

1. Engineer and Owner shall comply with applicable Laws and Regulations.

2. Engineer shall comply with any and all policies, procedures, and instructions of Owner that are applicable to Engineer's performance of services under this Agreement and that Owner provides to Engineer in writing, subject to the standard of care set forth in Paragraph 6.01.A, and to the extent compliance is not inconsistent with professional practice requirements.

3. This Agreement is based on Laws and Regulations and Owner-provided written policies and procedures as of the Effective Date. The following may be the basis for modifications to Owner's responsibilities or to Engineer's scope of services, times of performance, or compensation:

   a. changes after the Effective Date to Laws and Regulations;

   b. the receipt by Engineer after the Effective Date of Owner-provided written policies and procedures;

   c. changes after the Effective Date to Owner-provided written policies or procedures.

F. Engineer shall not be required to sign any document, no matter by whom requested, that would result in the Engineer having to certify, guarantee, or warrant the existence of conditions whose existence the Engineer cannot ascertain. Owner agrees not to make

Copyright © 2014 National Society of Professional Engineers, American Council of Engineering Companies, and American Society of Civil Engineers. All rights reserved.

resolution of any dispute with the Engineer or payment of any amount due to the Engineer in any way contingent upon the Engineer signing any such document.

G. The general conditions for any construction contract documents prepared hereunder are to be EJCDC® C-700 "Standard General Conditions of the Construction Contract" (2013 Edition), prepared by the Engineers Joint Contract Documents Committee, unless expressly indicated otherwise in Exhibit J or elsewhere in this Agreement.

H. Engineer shall not at any time supervise, direct, control, or have authority over any Constructor's work, nor shall Engineer have authority over or be responsible for the means, methods, techniques, sequences, or procedures of construction selected or used by any Constructor, or the safety precautions and programs incident thereto, for security or safety at the Site, nor for any failure of a Constructor to comply with Laws and Regulations applicable to that Constructor's furnishing and performing of its work. Engineer shall not be responsible for the acts or omissions of any Constructor.

I. Engineer neither guarantees the performance of any Constructor nor assumes responsibility for any Constructor's, failure to furnish and perform the Work in accordance with the Construction Contract Documents.

J. Engineer shall not be responsible for any decision made regarding the Construction Contract Documents, or any application, interpretation, clarification, or modification of the Construction Contract Documents, other than those made by Engineer or its Consultants.

K. Engineer is not required to provide and does not have any responsibility for surety bonding or insurance-related advice, recommendations, counseling, or research, or enforcement of construction insurance or surety bonding requirements.

L. Engineer's services do not include providing legal advice or representation.

M. Engineer's services do not include (1) serving as a "municipal advisor" for purposes of the registration requirements of Section 975 of the Dodd-Frank Wall Street Reform and Consumer Protection Act (2010) or the municipal advisor registration rules issued by the Securities and Exchange Commission, or (2) advising Owner, or any municipal entity or other person or entity, regarding municipal financial products or the issuance of municipal securities, including advice with respect to the structure, timing, terms, or other similar matters concerning such products or issuances.

N. While at the Site, Engineer, its Consultants, and their employees and representatives shall comply with the applicable requirements of Contractor's and Owner's safety programs of which Engineer has been informed in writing.

6.02 *Design Without Construction Phase Services*

A. Engineer shall be responsible only for those Construction Phase services expressly required of Engineer in Exhibit A, Paragraph A1.05. With the exception of such expressly required services, Engineer shall have no design, Shop Drawing review, or other obligations during construction, and Owner assumes all responsibility for the application and interpretation of the Construction Contract Documents, review and response to

Copyright © 2014 National Society of Professional Engineers, American Council of Engineering Companies, and American Society of Civil Engineers. All rights reserved.

Contractor claims, Construction Contract administration, processing of Change Orders and submittals, revisions to the Construction Contract Documents during construction, construction observation and review, review of Contractor's payment applications, and all other necessary Construction Phase administrative, engineering, and professional services. Owner waives all claims against the Engineer that may be connected in any way to Construction Phase administrative, engineering, or professional services except for those services that are expressly required of Engineer in Exhibit A.

6.03 *Use of Documents*

A. All Documents are instruments of service, and Engineer shall retain an ownership and property interest therein (including the copyright and the right of reuse at the discretion of the Engineer) whether or not the Project is completed.

B. If Engineer is required to prepare or furnish Drawings or Specifications under this Agreement, Engineer shall deliver to Owner at least one original printed record version of such Drawings and Specifications, signed and sealed according to applicable Laws and Regulations.

C. Owner may make and retain copies of Documents for information and reference in connection with the use of the Documents on the Project. Engineer grants Owner a limited license to use the Documents on the Project, extensions of the Project, and for related uses of the Owner, subject to receipt by Engineer of full payment due and owing for all services relating to preparation of the Documents, and subject to the following limitations: (1) Owner acknowledges that such Documents are not intended or represented to be suitable for use on the Project unless completed by Engineer, or for use or reuse by Owner or others on extensions of the Project, on any other project, or for any other use or purpose, without written verification or adaptation by Engineer; (2) any such use or reuse, or any modification of the Documents, without written verification, completion, or adaptation by Engineer, as appropriate for the specific purpose intended, will be at Owner's sole risk and without liability or legal exposure to Engineer or to its officers, directors, members, partners, agents, employees, and Consultants; (3) Owner shall indemnify and hold harmless Engineer and its officers, directors, members, partners, agents, employees, and Consultants from all claims, damages, losses, and expenses, including attorneys' fees, arising out of or resulting from any use, reuse, or modification of the Documents without written verification, completion, or adaptation by Engineer; and (4) such limited license to Owner shall not create any rights in third parties.

D. If Engineer at Owner's request verifies the suitability of the Documents, completes them, or adapts them for extensions of the Project or for any other purpose, then Owner shall compensate Engineer at rates or in an amount to be agreed upon by Owner and Engineer.

6.04 *Electronic Transmittals*

A. Owner and Engineer may transmit, and shall accept, Project-related correspondence, Documents, text, data, drawings, information, and graphics, in electronic media or digital format, either directly, or through access to a secure Project website, in accordance with a mutually agreeable protocol.

Copyright © 2014 National Society of Professional Engineers, American Council of Engineering Companies, and American Society of Civil Engineers. All rights reserved.

B. If this Agreement does not establish protocols for electronic or digital transmittals, then Owner and Engineer shall jointly develop such protocols.

C. When transmitting items in electronic media or digital format, the transmitting party makes no representations as to long term compatibility, usability, or readability of the items resulting from the recipient's use of software application packages, operating systems, or computer hardware differing from those used in the drafting or transmittal of the items, or from those established in applicable transmittal protocols.

6.05 *Insurance*

A. Engineer shall procure and maintain insurance as set forth in Exhibit G. Engineer shall cause Owner to be listed as an additional insured on any applicable general liability insurance policy carried by Engineer.

B. Owner shall procure and maintain insurance as set forth in Exhibit G. Owner shall cause Engineer and its Consultants to be listed as additional insureds on any general liability policies carried by Owner, which are applicable to the Project.

C. Owner shall require Contractor to purchase and maintain policies of insurance covering workers' compensation, general liability, motor vehicle damage and injuries, and other insurance necessary to protect Owner's and Engineer's interests in the Project. Owner shall require Contractor to cause Engineer and its Consultants to be listed as additional insureds with respect to such liability insurance purchased and maintained by Contractor for the Project.

D. Owner and Engineer shall each deliver to the other certificates of insurance evidencing the coverages indicated in Exhibit G. Such certificates shall be furnished prior to commencement of Engineer's services and at renewals thereafter during the life of the Agreement.

E. All policies of property insurance relating to the Project, including but not limited to any builder's risk policy, shall allow for waiver of subrogation rights and contain provisions to the effect that in the event of payment of any loss or damage the insurers will have no rights of recovery against any insured thereunder or against Engineer or its Consultants. Owner and Engineer waive all rights against each other, Contractor, the Consultants, and the respective officers, directors, members, partners, employees, agents, consultants, and subcontractors of each and any of them, for all losses and damages caused by, arising out of, or resulting from any of the perils or causes of loss covered by any builder's risk policy and any other property insurance relating to the Project. Owner and Engineer shall take appropriate measures in other Project-related contracts to secure waivers of rights consistent with those set forth in this paragraph.

F. All policies of insurance shall contain a provision or endorsement that the coverage afforded will not be canceled or reduced in limits by endorsement, and that renewal will not be refused, until at least 10 days prior written notice has been given to the primary insured. Upon receipt of such notice, the receiving party shall promptly forward a copy of the notice to the other party to this Agreement.

Copyright © 2014 National Society of Professional Engineers, American Council of Engineering Companies, and American Society of Civil Engineers. All rights reserved.

G. At any time, Owner may request that Engineer or its Consultants, at Owner's sole expense, provide additional insurance coverage, increased limits, or revised deductibles that are more protective than those specified in Exhibit G. If so requested by Owner, and if commercially available, Engineer shall obtain and shall require its Consultants to obtain such additional insurance coverage, different limits, or revised deductibles for such periods of time as requested by Owner, and Exhibit G will be supplemented to incorporate these requirements.

6.06 *Suspension and Termination*

A. *Suspension:*

1. *By Owner*: Owner may suspend the Project for up to 90 days upon seven days written notice to Engineer.

2. *By Engineer*: Engineer may, after giving seven days written notice to Owner, suspend services under this Agreement if Owner has failed to pay Engineer for invoiced services and expenses, as set forth in Paragraph 4.02.B, or in response to the presence of Constituents of Concern at the Site, as set forth in Paragraph 6.10.D.

B. *Termination*: The obligation to provide further services under this Agreement may be terminated:

1. For cause,

a. by either party upon 30 days written notice in the event of substantial failure by the other party to perform in accordance with the terms hereof through no fault of the terminating party.

b. by Engineer:

1) upon seven days written notice if Owner demands that Engineer furnish or perform services contrary to Engineer's responsibilities as a licensed professional; or

2) upon seven days written notice if the Engineer's services for the Project are delayed or suspended for more than 90 days for reasons beyond Engineer's control, or as the result of the presence at the Site of undisclosed Constituents of Concern, as set forth in Paragraph 6.10.D.

3) Engineer shall have no liability to Owner on account of such termination.

c. Notwithstanding the foregoing, this Agreement will not terminate under Paragraph 6.06.B.1.a if the party receiving such notice begins, within seven days of receipt of such notice, to correct its substantial failure to perform and proceeds diligently to cure such failure within no more than 30 days of receipt thereof; provided, however, that if and to the extent such substantial failure cannot be reasonably cured within such 30 day period, and if such party has diligently attempted to cure the same and thereafter continues diligently to cure the same,

Copyright © 2014 National Society of Professional Engineers, American Council of Engineering Companies, and American Society of Civil Engineers. All rights reserved.

then the cure period provided for herein shall extend up to, but in no case more than, 60 days after the date of receipt of the notice.

2. For convenience, by Owner effective upon Engineer's receipt of notice from Owner.

C. *Effective Date of Termination:* The terminating party under Paragraph 6.06.B may set the effective date of termination at a time up to 30 days later than otherwise provided to allow Engineer to demobilize personnel and equipment from the Site, to complete tasks whose value would otherwise be lost, to prepare notes as to the status of completed and uncompleted tasks, and to assemble Project materials in orderly files.

D. *Payments Upon Termination:*

1. In the event of any termination under Paragraph 6.06, Engineer will be entitled to invoice Owner and to receive full payment for all services performed or furnished in accordance with this Agreement and all Reimbursable Expenses incurred through the effective date of termination. Upon making such payment, Owner shall have the limited right to the use of Documents, at Owner's sole risk, subject to the provisions of Paragraph 6.03.

2. In the event of termination by Owner for convenience or by Engineer for cause, Engineer shall be entitled, in addition to invoicing for those items identified in Paragraph 6.06.D.1, to invoice Owner and receive payment of a reasonable amount for services and expenses directly attributable to termination, both before and after the effective date of termination, such as reassignment of personnel, costs of terminating contracts with Engineer's Consultants, and other related close-out costs, using methods and rates for Additional Services as set forth in Exhibit C.

6.07 *Controlling Law*

A. This Agreement is to be governed by the Laws and Regulations of the state in which the Project is located.

6.08 *Successors, Assigns, and Beneficiaries*

A. Owner and Engineer are hereby bound and the successors, executors, administrators, and legal representatives of Owner and Engineer (and to the extent permitted by Paragraph 6.08.B the assigns of Owner and Engineer) are hereby bound to the other party to this Agreement and to the successors, executors, administrators and legal representatives (and said assigns) of such other party, in respect of all covenants, agreements, and obligations of this Agreement.

B. Neither Owner nor Engineer may assign, sublet, or transfer any rights under or interest (including, but without limitation, money that is due or may become due) in this Agreement without the written consent of the other party, except to the extent that any assignment, subletting, or transfer is mandated by law. Unless specifically stated to the contrary in any written consent to an assignment, no assignment will release or discharge the assignor from any duty or responsibility under this Agreement.

Copyright © 2014 National Society of Professional Engineers, American Council of Engineering Companies, and American Society of Civil Engineers. All rights reserved.

C. Unless expressly provided otherwise in this Agreement:

1. Nothing in this Agreement shall be construed to create, impose, or give rise to any duty owed by Owner or Engineer to any Constructor, other third-party individual or entity, or to any surety for or employee of any of them.

2. All duties and responsibilities undertaken pursuant to this Agreement will be for the sole and exclusive benefit of Owner and Engineer and not for the benefit of any other party.

3. Owner agrees that the substance of the provisions of this Paragraph 6.08.C shall appear in the Construction Contract Documents.

6.09 *Dispute Resolution*

A. Owner and Engineer agree to negotiate all disputes between them in good faith for a period of 30 days from the date of notice prior to invoking the procedures of Exhibit H or other provisions of this Agreement or exercising their rights at law.

B. If the parties fail to resolve a dispute through negotiation under Paragraph 6.09.A, then either or both may invoke the procedures of Exhibit H. If Exhibit H is not included, or if no dispute resolution method is specified in Exhibit H, then the parties may exercise their rights at law.

6.10 *Environmental Condition of Site*

A. Owner represents to Engineer that as of the Effective Date to the best of Owner's knowledge no Constituents of Concern, other than those disclosed in writing to Engineer, exist at or adjacent to the Site.

B. If Engineer encounters or learns of an undisclosed Constituent of Concern at the Site, then Engineer shall notify (1) Owner and (2) appropriate governmental officials if Engineer reasonably concludes that doing so is required by applicable Laws or Regulations.

C. It is acknowledged by both parties that Engineer's scope of services does not include any services related to unknown or undisclosed Constituents of Concern. If Engineer or any other party encounters, uncovers, or reveals an undisclosed Constituent of Concern, then Owner shall promptly determine whether to retain a qualified expert to evaluate such condition or take any necessary corrective action.

D. If investigative or remedial action, or other professional services, are necessary with respect to undisclosed Constituents of Concern, or if investigative or remedial action beyond that reasonably contemplated is needed to address a disclosed or known Constituent of Concern, then Engineer may, at its option and without liability for consequential or any other damages, suspend performance of services on the portion of the Project affected thereby until such portion of the Project is no longer affected.

E. If the presence at the Site of undisclosed Constituents of Concern adversely affects the performance of Engineer's services under this Agreement, then the Engineer shall have the option of (1) accepting an equitable adjustment in its compensation or in the time of completion, or both; or (2) terminating this Agreement for cause on seven-day notice.

Copyright © 2014 National Society of Professional Engineers, American Council of Engineering Companies, and American Society of Civil Engineers. All rights reserved.

F. Owner acknowledges that Engineer is performing professional services for Owner and that Engineer is not and shall not be required to become an "owner," “arranger,” “operator,” “generator,” or “transporter” of hazardous substances, as defined in the Comprehensive Environmental Response, Compensation, and Liability Act (CERCLA), as amended, which are or may be encountered at or near the Site in connection with Engineer’s activities under this Agreement.

6.11 *Indemnification and Mutual Waiver*

A. *Indemnification by Engineer:* To the fullest extent permitted by Laws and Regulations, Engineer shall indemnify and hold harmless Owner, and Owner’s officers, directors, members, partners, agents, consultants, and employees, from losses, damages, and judgments (including reasonable consultants’ and attorneys’ fees and expenses) arising from third-party claims or actions relating to the Project, provided that any such claim, action, loss, damages, or judgment is attributable to bodily injury, sickness, disease, or death, or to injury to or destruction of tangible property (other than the Work itself), including the loss of use resulting therefrom, but only to the extent caused by any negligent act or omission of Engineer or Engineer’s officers, directors, members, partners, agents, employees, or Consultants. **This indemnification provision is subject to and limited by the provisions, if any, agreed to by Owner and Engineer in Exhibit I, “Limitations of Liability."**

B. *Indemnification by Owner:* Owner shall indemnify and hold harmless Engineer and its officers, directors, members, partners, agents, employees, and Consultants as required by Laws and Regulations **and to the extent (if any) required in Exhibit I, “Limitations of Liability.”**

C. *Environmental Indemnification:* To the fullest extent permitted by Laws and Regulations, Owner shall indemnify and hold harmless Engineer and its officers, directors, members, partners, agents, employees, and Consultants from all claims, costs, losses, damages, actions, and judgments (including reasonable consultants’ and attorney’s fees and expenses) caused by, arising out of, relating to, or resulting from a Constituent of Concern at, on, or under the Site, provided that (1) any such claim, cost, loss, damages, action, or judgment is attributable to bodily injury, sickness, disease, or death, or to injury to or destruction of tangible property (other than the Work itself), including the loss of use resulting therefrom, and (2) nothing in this paragraph shall obligate Owner to indemnify any individual or entity from and against the consequences of that individual's or entity's own negligence or willful misconduct.

D. *No Defense Obligation:* The indemnification commitments in this Agreement do not include a defense obligation by the indemnitor unless such obligation is expressly stated.

E. *Percentage Share of Negligence:* To the fullest extent permitted by Laws and Regulations, a party’s total liability to the other party and anyone claiming by, through, or under the other party for any cost, loss, or damages caused in part by the negligence of the party and in part by the negligence of the other party or any other negligent entity or individual, shall not exceed the percentage share that the party’s negligence bears to the total negligence of Owner, Engineer, and all other negligent entities and individuals.

Copyright © 2014 National Society of Professional Engineers, American Council of Engineering Companies, and American Society of Civil Engineers. All rights reserved.

F. *Mutual Waiver:* To the fullest extent permitted by Laws and Regulations, Owner and Engineer waive against each other, and the other's employees, officers, directors, members, agents, insurers, partners, and consultants, any and all claims for or entitlement to special, incidental, indirect, or consequential damages arising out of, resulting from, or in any way related to this Agreement or the Project, from any cause or causes.

6.12 *Records Retention*

A. Engineer shall maintain on file in legible form, for a period of five years following completion or termination of its services, all Documents, records (including cost records), and design calculations related to Engineer's services or pertinent to Engineer's performance under this Agreement. Upon Owner's request, Engineer shall provide a copy of any such item to Owner at cost.

6.13 *Miscellaneous Provisions*

A. *Notices:* Any notice required under this Agreement will be in writing, addressed to the appropriate party at its address on the signature page and given personally, by registered or certified mail postage prepaid, or by a commercial courier service. All notices shall be effective upon the date of receipt.

B. *Survival:* All express representations, waivers, indemnifications, and limitations of liability included in this Agreement will survive its completion or termination for any reason.

C. *Severability:* Any provision or part of the Agreement held to be void or unenforceable under any Laws or Regulations shall be deemed stricken, and all remaining provisions shall continue to be valid and binding upon Owner and Engineer, which agree that the Agreement shall be reformed to replace such stricken provision or part thereof with a valid and enforceable provision that comes as close as possible to expressing the intention of the stricken provision.

D. *Waiver:* A party's non-enforcement of any provision shall not constitute a waiver of that provision, nor shall it affect the enforceability of that provision or of the remainder of this Agreement.

E. *Accrual of Claims:* To the fullest extent permitted by Laws and Regulations, all causes of action arising under this Agreement shall be deemed to have accrued, and all statutory periods of limitation shall commence, no later than the date of Substantial Completion.

ARTICLE 7 – DEFINITIONS

7.01 *Defined Terms*

A. Wherever used in this Agreement (including the Exhibits hereto) terms (including the singular and plural forms) printed with initial capital letters have the meanings indicated in the text above, in the exhibits, or in the following definitions:

1. *Addenda*—Written or graphic instruments issued prior to the opening of bids which clarify, correct, or change the bidding requirements or the proposed Construction Contract Documents.

Copyright © 2014 National Society of Professional Engineers, American Council of Engineering Companies, and American Society of Civil Engineers. All rights reserved.

2. *Additional Services*—The services to be performed for or furnished to Owner by Engineer in accordance with Part 2 of Exhibit A of this Agreement.

3. *Agreement*—This written contract for professional services between Owner and Engineer, including all exhibits identified in Paragraph 8.01 and any duly executed amendments.

4. *Application for Payment*—The form acceptable to Engineer which is to be used by Contractor during the course of the Work in requesting progress or final payments and which is to be accompanied by such supporting documentation as is required by the Construction Contract.

5. *Basic Services*—The services to be performed for or furnished to Owner by Engineer in accordance with Part 1 of Exhibit A of this Agreement.

6. *Change Order*—A document which is signed by Contractor and Owner and authorizes an addition, deletion, or revision in the Work or an adjustment in the Construction Contract Price or the Construction Contract Times, or other revision to the Construction Contract, issued on or after the effective date of the Construction Contract.

7. *Change Proposal*—A written request by Contractor, duly submitted in compliance with the procedural requirements set forth in the Construction Contract, seeking an adjustment in Construction Contract Price or Construction Contract Times, or both; contesting an initial decision by Engineer concerning the requirements of the Construction Contract Documents or the acceptability of Work under the Construction Contract Documents; challenging a set-off against payments due; or seeking other relief with respect to the terms of the Construction Contract.

8. *Constituent of Concern*—Asbestos, petroleum, radioactive material, polychlorinated biphenyls (PCBs), hazardous waste, and any substance, product, waste, or other material of any nature whatsoever that is or becomes listed, regulated, or addressed pursuant to (a) the Comprehensive Environmental Response, Compensation and Liability Act, 42 U.S.C. §§9601 et seq. ("CERCLA"); (b) the Hazardous Materials Transportation Act, 49 U.S.C. §§5501 et seq.; (c) the Resource Conservation and Recovery Act, 42 U.S.C. §§6901 et seq. ("RCRA"); (d) the Toxic Substances Control Act, 15 U.S.C. §§2601 et seq.; (e) the Clean Water Act, 33 U.S.C. §§1251 et seq.; (f) the Clean Air Act, 42 U.S.C. §§7401 et seq.; or (g) any other federal, State, or local statute, law, rule, regulation, ordinance, resolution, code, order, or decree regulating, relating to, or imposing liability or standards of conduct concerning, any hazardous, toxic, or dangerous waste, substance, or material.

9. *Construction Contract*—The entire and integrated written contract between the Owner and Contractor concerning the Work.

10. *Construction Contract Documents*—Those items designated as "Contract Documents" in the Construction Contract, and which together comprise the Construction Contract.

11. *Construction Contract Price*—The money that Owner has agreed to pay Contractor for completion of the Work in accordance with the Construction Contract Documents.

Copyright © 2014 National Society of Professional Engineers, American Council of Engineering Companies, and American Society of Civil Engineers. All rights reserved.

12. *Construction Contract Times*—The number of days or the dates by which Contractor shall: (a) achieve milestones, if any, in the Construction Contract; (b) achieve Substantial Completion; and (c) complete the Work.

13. *Construction Cost*—The cost to Owner of the construction of those portions of the entire Project designed or specified by or for Engineer under this Agreement, including construction labor, services, materials, equipment, insurance, and bonding costs, and allowances for contingencies. Construction Cost does not include costs of services of Engineer or other design professionals and consultants; cost of land or rights-of-way, or compensation for damages to property; Owner's costs for legal, accounting, insurance counseling, or auditing services; interest or financing charges incurred in connection with the Project; or the cost of other services to be provided by others to Owner. Construction Cost is one of the items comprising Total Project Costs.

14. *Constructor*—Any person or entity (not including the Engineer, its employees, agents, representatives, and Consultants), performing or supporting construction activities relating to the Project, including but not limited to Contractors, Subcontractors, Suppliers, Owner's work forces, utility companies, other contractors, construction managers, testing firms, shippers, and truckers, and the employees, agents, and representatives of any or all of them.

15. *Consultants*—Individuals or entities having a contract with Engineer to furnish services with respect to this Project as Engineer's independent professional associates and consultants; subcontractors; or vendors.

16. *Contractor*—The entity or individual with which Owner enters into a Construction Contract.

17. *Documents*—Data, reports, Drawings, Specifications, Record Drawings, building information models, civil integrated management models, and other deliverables, whether in printed or electronic format, provided or furnished in appropriate phases by Engineer to Owner pursuant to this Agreement.

18. *Drawings*—That part of the Construction Contract Documents that graphically shows the scope, extent, and character of the Work to be performed by Contractor.

19. *Effective Date*—The date indicated in this Agreement on which it becomes effective, but if no such date is indicated, the date on which this Agreement is signed and delivered by the last of the parties to sign and deliver.

20. *Engineer*—The individual or entity named as such in this Agreement.

21. *Field Order*—A written order issued by Engineer which requires minor changes in the Work but does not change the Construction Contract Price or the Construction Contract Times.

22. *Laws and Regulations; Laws or Regulations*—Any and all applicable laws, statutes, rules, regulations, ordinances, codes, and orders of any and all governmental bodies, agencies, authorities, and courts having jurisdiction.

Copyright © 2014 National Society of Professional Engineers, American Council of Engineering Companies, and American Society of Civil Engineers. All rights reserved.

23. *Owner*—The individual or entity named as such in this Agreement and for which Engineer's services are to be performed. Unless indicated otherwise, this is the same individual or entity that will enter into any Construction Contracts concerning the Project.

24. *Project*—The total undertaking to be accomplished for Owner by engineers, contractors, and others, including planning, study, design, construction, testing, commissioning, and start-up, and of which the services to be performed or furnished by Engineer under this Agreement are a part.

25. *Record Drawings*—Drawings depicting the completed Project, or a specific portion of the completed Project, prepared by Engineer as an Additional Service and based on Contractor's record copy of all Drawings, Specifications, Addenda, Change Orders, Work Change Directives, Field Orders, and written interpretations and clarifications, as delivered to Engineer and annotated by Contractor to show changes made during construction.

26. *Reimbursable Expenses*—The expenses incurred directly by Engineer in connection with the performing or furnishing of Basic Services and Additional Services for the Project.

27. *Resident Project Representative*—The authorized representative of Engineer assigned to assist Engineer at the Site during the Construction Phase. As used herein, the term Resident Project Representative or "RPR" includes any assistants or field staff of Resident Project Representative. The duties and responsibilities of the Resident Project Representative, if any, are as set forth in Exhibit D.

28. *Samples*—Physical examples of materials, equipment, or workmanship that are representative of some portion of the Work and that establish the standards by which such portion of the Work will be judged.

29. *Shop Drawings*—All drawings, diagrams, illustrations, schedules, and other data or information that are specifically prepared or assembled by or for Contractor and submitted by Contractor to illustrate some portion of the Work. Shop Drawings, whether approved or not, are not Drawings and are not Construction Contract Documents.

30. *Site*—Lands or areas to be indicated in the Construction Contract Documents as being furnished by Owner upon which the Work is to be performed, including rights-of-way and easements, and such other lands furnished by Owner which are designated for the use of Contractor.

31. *Specifications*—The part of the Construction Contract Documents that consists of written requirements for materials, equipment, systems, standards, and workmanship as applied to the Work, and certain administrative requirements and procedural matters applicable to the Work.

32. *Subcontractor*—An individual or entity having a direct contract with Contractor or with any other Subcontractor for the performance of a part of the Work.

33. *Substantial Completion*—The time at which the Work (or a specified part thereof) has progressed to the point where, in the opinion of Engineer, the Work (or a specified part

Copyright © 2014 National Society of Professional Engineers, American Council of Engineering Companies, and American Society of Civil Engineers. All rights reserved.

thereof) is sufficiently complete, in accordance with the Construction Contract Documents, so that the Work (or a specified part thereof) can be utilized for the purposes for which it is intended. The terms "substantially complete" and "substantially completed" as applied to all or part of the Work refer to Substantial Completion thereof.

34. *Supplier*—A manufacturer, fabricator, supplier, distributor, materialman, or vendor having a direct contract with Contractor or with any Subcontractor to furnish materials or equipment to be incorporated in the Work by Contractor or a Subcontractor.

35. *Total Project Costs*—The total cost of planning, studying, designing, constructing, testing, commissioning, and start-up of the Project, including Construction Cost and all other Project labor, services, materials, equipment, insurance, and bonding costs, allowances for contingencies, and the total costs of services of Engineer or other design professionals and consultants, together with such other Project-related costs that Owner furnishes for inclusion, including but not limited to cost of land, rights-of-way, compensation for damages to properties, Owner's costs for legal, accounting, insurance counseling, and auditing services, interest and financing charges incurred in connection with the Project, and the cost of other services to be provided by others to Owner.

36. *Work*—The entire construction or the various separately identifiable parts thereof required to be provided under the Construction Contract Documents. Work includes and is the result of performing or providing all labor, services, and documentation necessary to produce such construction; furnishing, installing, and incorporating all materials and equipment into such construction; and may include related services such as testing, start-up, and commissioning, all as required by the Construction Contract Documents.

37. *Work Change Directive*—A written directive to Contractor issued on or after the effective date of the Construction Contract, signed by Owner and recommended by Engineer, ordering an addition, deletion, or revision in the Work.

B. *Day*:

1. The word "day" means a calendar day of 24 hours measured from midnight to the next midnight.

ARTICLE 8 – EXHIBITS AND SPECIAL PROVISIONS

8.01 *Exhibits Included:*

A. Exhibit A, Engineer's Services.

B. Exhibit B, Owner's Responsibilities.

C. Exhibit C, Payments to Engineer for Services and Reimbursable Expenses.

D. Exhibit D, Duties, Responsibilities and Limitations of Authority of Resident Project Representative.

E. Exhibit E, DELETED

Copyright © 2014 National Society of Professional Engineers, American Council of Engineering Companies, and American Society of Civil Engineers. All rights reserved.

F. Exhibit F, DELETED

G. Exhibit G, Insurance.

H. Exhibit H, DELETED

I. Exhibit I, Limitations of Liability.

J. Exhibit J, DELETED

K. Exhibit K, DELETED

8.02 *Total Agreement*

A. This Agreement, (together with the exhibits included above) constitutes the entire agreement between Owner and Engineer and supersedes all prior written or oral understandings. This Agreement may only be amended, supplemented, modified, or canceled by a written instrument duly executed by both parties.

8.03 *Designated Representatives*

A. With the execution of this Agreement, Engineer and Owner shall designate specific individuals to act as Engineer's and Owner's representatives with respect to the services to be performed or furnished by Engineer and responsibilities of Owner under this Agreement. Such an individual shall have authority to transmit instructions, receive information, and render decisions relative to this Agreement on behalf of the respective party whom the individual represents.

8.04 *Engineer's Certifications*

A. Engineer certifies that it has not engaged in corrupt, fraudulent, or coercive practices in competing for or in executing the Agreement. For the purposes of this Paragraph 8.04:

1. "corrupt practice" means the offering, giving, receiving, or soliciting of any thing of value likely to influence the action of a public official in the selection process or in the Agreement execution;

2. "fraudulent practice" means an intentional misrepresentation of facts made (a) to influence the selection process or the execution of the Agreement to the detriment of Owner, or (b) to deprive Owner of the benefits of free and open competition;

3. "coercive practice" means harming or threatening to harm, directly or indirectly, persons or their property to influence their participation in the selection process or affect the execution of the Agreement.

Copyright © 2014 National Society of Professional Engineers, American Council of Engineering Companies, and American Society of Civil Engineers. All rights reserved.

IN WITNESS WHEREOF, the parties hereto have executed this Agreement, the Effective Date of which is indicated on page 1.

Owner: **The City of Hattiesburg**

By:

Print name: **Toby Barker**
Title: Mayor
Date Signed:

Address for Owner's receipt of notices:
P.O. Box 1898
Hattiesburg, MS 39403-1898

Designated Representative (Paragraph 8.03.A):
Lamar Rutland, P.E.
Title: Director of Engineering
Phone Number: 601-545-4540
E-Mail Address: lrutland@hattiesburgms.com

Engineer: **Shows, Dearman and Waits, Inc.**

By:

Print name: **Shea McNease, P.E.**
Title: President
Date Signed:

Engineer License or Firm's Certificate No. (if required):
E-004
State of: Mississippi

Address for Engineer's receipt of notices:
301 Second Avenue
Hattiesburg, MS 39401

Designated Representative (Paragraph 8.03.A):
Shea E. McNease, P.E.
Title: President
Phone Number: 601-544-1821
E-Mail Address: shea@sd-w.com

Copyright © 2014 National Society of Professional Engineers, American Council of Engineering Companies, and American Society of Civil Engineers. All rights reserved.

This is **EXHIBIT A**, consisting of **14** pages, referred to in and part of the **Agreement between Owner and Engineer for Professional Services** dated _____.

Engineer's Services

Article 1 of the Agreement is supplemented to include the following agreement of the parties.

Engineer shall provide Basic and Additional Services as set forth below.

PART 1 – BASIC SERVICES

A1.01 *Study and Report Phase* - ***SECTION DELETED***

A1.02 *Preliminary Design Phase*

A. After issuance by Owner of any instructions of for use of Project Strategies, Technologies, and Techniques, or for inclusion of sustainable features in the design; and indication by Owner of any specific modifications or changes in the scope, extent, character, or design requirements of the Project desired by Owner, (1) Engineer and Owner shall discuss and resolve any necessary revisions to Engineer's compensation (through application of the provisions regarding Additional Services, or otherwise), or the time for completion of Engineer's services, resulting from the selected solution, related Project Strategies, Technologies, or Techniques, sustainable design instructions, or specific modifications to the Project, and (2) upon written from Owner, Engineer shall:

1. Prepare Preliminary Design Phase documents consisting of final design criteria, preliminary drawings, outline specifications, and written descriptions of the Project.

2. In preparing the Preliminary Design Phase documents, use any specific applicable Project Strategies, Technologies, and Techniques authorized by Owner and include sustainable features, as appropriate, pursuant to Owner's instructions.

3. Provide necessary field surveys and topographic and utility mapping for Engineer's design purposes. Comply with the scope of work and procedure for the identification and mapping of existing utilities selected and authorized by Owner pursuant to advice from Engineer based on ASCE 38, "Standard Guideline for the Collection and Depiction of Existing Subsurface Utility Data," as set forth in Paragraph A1.01.A.12 above. If no such scope of work and procedure for utility mapping has been selected and authorized, then at a minimum the utility mapping will include Engineer contacting utility owners and obtaining available information.

4. Visit the Site as needed to prepare the Preliminary Design Phase documents.

5. Advise Owner if additional reports, data, information, or services of the types described in Exhibit B are necessary and assist Owner in obtaining such reports, data, information, or services.

6. Continue to assist Owner with Project Strategies, Technologies, and Techniques that Owner has chosen to implement.

Copyright © 2014 National Society of Professional Engineers, American Council of Engineering Companies, and American Society of Civil Engineers. All rights reserved.

7. Based on the information contained in the Preliminary Design Phase documents, prepare a revised opinion of probable Construction Cost, and assist Owner in tabulating the various cost categories which comprise Total Project Costs.

8. Obtain and review Owner's instructions regarding Owner's procurement of construction services (including instructions regarding advertisements for bids, instructions to bidders, and requests for proposals, as applicable), Owner's construction contract practices and requirements, insurance and bonding requirements, electronic transmittals during construction, and other information necessary for the finalization of Owner's bidding-related documents (or requests for proposals or other construction procurement documents), and Construction Contract Documents. Also obtain and review copies of Owner's design and construction standards, Owner's standard forms, general conditions (if other than EJCDC® C-700, Standard General Conditions of the Construction Contract, 2013 Edition), supplementary conditions, text, and related documents or content for Engineer to include in the draft bidding-related documents (or requests for proposals or other construction procurement documents), and in the draft Construction Contract Documents, when applicable.

9. Perform or provide the following other Preliminary Design Phase tasks or deliverables: N/A

10. Furnish 1 review copies of the Preliminary Design Phase documents, opinion of probable Construction Cost, and any other Preliminary Design Phase deliverables to Owner within 120 days of authorization to proceed with this phase, and review them with Owner. Within 15 days of receipt, Owner shall submit to Engineer any comments regarding the furnished items.

11. Revise the Preliminary Design Phase documents, opinion of probable Construction Cost, and any other Preliminary Design Phase deliverables in response to Owner's comments, as appropriate, and furnish to Owner 1 copies of the revised Preliminary Design Phase documents, revised opinion of probable Construction Cost, and any other deliverables within 60 days after receipt of Owner's comments.

B. Engineer's services under the Preliminary Design Phase will be considered complete on the date when Engineer has delivered to Owner the revised Preliminary Design Phase documents, revised opinion of probable Construction Cost, and any other Preliminary Design Phase deliverables.

A1.03 *Final Design Phase*

A. After acceptance by Owner of the Preliminary Design Phase documents, revised opinion of probable Construction Cost as determined in the Preliminary Design Phase, and any other Preliminary Design Phase deliverables, subject to any Owner-directed modifications or changes in the scope, extent, character, or design requirements of or for the Project, and upon authorization from Owner, Engineer shall:

1. Prepare final Drawings and Specifications indicating the scope, extent, and character of the Work to be performed and furnished by Contractor.

2. Visit the Site as needed to assist in preparing the final Drawings and Specifications.

Copyright © 2014 National Society of Professional Engineers, American Council of Engineering Companies, and American Society of Civil Engineers. All rights reserved.

3. Provide technical criteria, written descriptions, and design data for Owner's use in filing applications for permits from or approvals of governmental authorities having jurisdiction to review or approve the final design; assist Owner in consultations with such authorities; and revise the Drawings and Specifications in response to directives from such authorities, as appropriate.

4. Advise Owner of any recommended adjustments to the opinion of probable Construction Cost.

5. After consultation with Owner, include in the Construction Contract Documents any specific protocols for the transmittal of Project-related correspondence, documents, text, data, drawings, information, and graphics, in electronic media or digital format, either directly, or through access to a secure Project website. Any such protocols shall be applicable to transmittals between and among Owner, Engineer, and Contractor during the Construction Phase and Post-Construction Phase, and unless agreed otherwise shall supersede any conflicting protocols previously established for transmittals between Owner and Engineer.

6. Assist Owner in assembling known reports and drawings of Site conditions, and in identifying the technical data contained in such reports and drawings upon which bidders or other prospective contractors may rely.

7. In addition to preparing the final Drawings and Specifications, assemble drafts of other Construction Contract Documents based on specific instructions and contract forms, text, or content received from Owner.

8. Prepare or assemble draft bidding-related documents (or requests for proposals or other construction procurement documents), based on the specific bidding or procurement-related instructions and forms, text, or content received from Owner.

9. Perform or provide the following other Final Design Phase tasks or deliverables: N/A

10. Furnish for review by Owner, its legal counsel, and other advisors, 1 copies of the final Drawings and Specifications, assembled drafts of other Construction Contract Documents, the draft bidding-related documents (or requests for proposals or other construction procurement documents), and any other Final Design Phase deliverables, within 120 days of authorization to proceed with the Final Design Phase, and review them with Owner. Within 15 days of receipt, Owner shall submit to Engineer any comments regarding the furnished items, and any instructions for revisions.

11. Revise the final Drawings and Specifications, assembled drafts of other Construction Contract Documents, the draft bidding-related documents (or requests for proposals or other construction procurement documents), and any other Final Design Phase deliverables in accordance with comments and instructions from the Owner, as appropriate, and submit 1 final copies of such documents to Owner within 60 days after receipt of Owner's comments and instructions.

B. Engineer's services under the Final Design Phase will be considered complete on the date when Engineer has delivered to Owner the final Drawings and Specifications, other

Copyright © 2014 National Society of Professional Engineers, American Council of Engineering Companies, and American Society of Civil Engineers. All rights reserved.

assembled Construction Contract Documents, bidding-related documents (or requests for proposals or other construction procurement documents), and any other Final Design Phase deliverables.

C. In the event that the Work designed or specified by Engineer is to be performed or furnished under more than one prime contract, or if Engineer's services are to be separately sequenced with the work of one or more prime Contractors (such as in the case of fast-tracking), Owner and Engineer shall, prior to commencement of the Final Design Phase, develop a schedule for performance of Engineer's services during the Final Design, Bidding or Negotiating, Construction, and Post-Construction Phases in order to sequence and coordinate properly such services as are applicable to the work under such separate prime contracts. This schedule is to be prepared and included in or become an amendment to Exhibit A whether or not the work under such contracts is to proceed concurrently.

D. The number of prime contracts for Work designed or specified by Engineer upon which the Engineer's compensation has been established under this Agreement is one (1). If more prime contracts are awarded, Engineer shall be entitled to an equitable increase in its compensation under this Agreement.

A1.04 *Bidding or Negotiating Phase*

A. After acceptance by Owner of the final Drawings and Specifications, other Construction Contract Documents, bidding-related documents (or requests for proposals or other construction procurement documents), and the most recent opinion of probable Construction Cost as determined in the Final Design Phase, and upon written authorization by Owner to proceed, Engineer shall:

1. Assist Owner in advertising for and obtaining bids or proposals for the Work, assist Owner in issuing assembled design, contract, and bidding-related documents (or requests for proposals or other construction procurement documents) to prospective contractors, and, where applicable, maintain a record of prospective contractors to which documents have been issued, attend pre-bid conferences, if any, and receive and process contractor deposits or charges for the issued documents.

2. Prepare and issue Addenda as appropriate to clarify, correct, or change the issued documents.

3. Provide information or assistance needed by Owner in the course of any review of proposals or negotiations with prospective contractors.

4. Consult with Owner as to the qualifications of prospective contractors.

5. Consult with Owner as to the qualifications of subcontractors, suppliers, and other individuals and entities proposed by prospective contractors, for those portions of the Work as to which review of qualifications is required by the issued documents.

6. If the issued documents require, the Engineer shall evaluate and determine the acceptability of "or equals" and substitute materials and equipment proposed by prospective contractors, provided that such proposals are allowed by the bidding-related documents (or requests for proposals or other construction procurement

Copyright © 2014 National Society of Professional Engineers, American Council of Engineering Companies, and American Society of Civil Engineers. All rights reserved.

documents) prior to award of contracts for the Work. Services under this paragraph are subject to the provisions of Paragraph A2.02.A.2 of this Exhibit A.

7. Attend the bid opening, prepare bid tabulation sheets to meet Owner's schedule, and assist Owner in evaluating bids or proposals, assembling final contracts for the Work for execution by Owner and Contractor, and in issuing notices of award of such contracts.

8. If Owner engages in negotiations with bidders or proposers, assist Owner with respect to technical and engineering issues that arise during the negotiations.

9. Perform or provide the following other Bidding or Negotiating Phase tasks or deliverables: N/A

B. The Bidding or Negotiating Phase will be considered complete upon commencement of the Construction Phase or upon cessation of negotiations with prospective contractors (except as may be required if Exhibit F is a part of this Agreement).

A1.05 *Construction Phase*

A. Upon successful completion of the Bidding and Negotiating Phase, and upon written authorization from Owner, Engineer shall:

1. *General Administration of Construction Contract:* Consult with Owner and act as Owner's representative as provided in the Construction Contract. The extent and limitations of the duties, responsibilities, and authority of Engineer shall be as assigned in EJCDC® C-700, Standard General Conditions of the Construction Contract (2013 Edition), prepared by the Engineers Joint Contract Documents Committee, or other construction general conditions specified in this Agreement. If Owner, or Owner and Contractor, modify the duties, responsibilities, and authority of Engineer in the Construction Contract, or modify other terms of the Construction Contract having a direct bearing on Engineer, then Owner shall compensate Engineer for any related increases in the cost to provide Construction Phase services. Engineer shall not be required to furnish or perform services contrary to Engineer's responsibilities as a licensed professional. All of Owner's instructions to Contractor will be issued through Engineer, which shall have authority to act on behalf of Owner in dealings with Contractor to the extent provided in this Agreement and the Construction Contract except as otherwise provided in writing.

2. *Resident Project Representative (RPR):* Provide the services of an RPR at the Site to assist the Engineer and to provide more extensive observation of Contractor's work. Duties, responsibilities, and authority of the RPR are as set forth in Exhibit D. The furnishing of such RPR's services will not limit, extend, or modify Engineer's responsibilities or authority except as expressly set forth in Exhibit D**.**

3. *Selection of Independent Testing Laboratory:* Assist Owner in the selection of an independent testing laboratory to perform the services identified in Exhibit B, Paragraph B2.01.

4. *Pre-Construction Conference:* Participate in a pre-construction conference prior to commencement of Work at the Site.

Copyright © 2014 National Society of Professional Engineers, American Council of Engineering Companies, and American Society of Civil Engineers. All rights reserved.

5. *Electronic Transmittal Protocols:* If the Construction Contract Documents do not specify protocols for the transmittal of Project-related correspondence, documents, text, data, drawings, information, and graphics, in electronic media or digital format, either directly, or through access to a secure Project website, then together with Owner and Contractor jointly develop such protocols for transmittals between and among Owner, Contractor, and Engineer during the Construction Phase and Post-Construction Phase.

6. *Original Documents:* If requested by Owner to do so, maintain and safeguard during the Construction Phase at least one original printed record version of the Construction Contract Documents, including Drawings and Specifications signed and sealed by Engineer and other design professionals in accordance with applicable Laws and Regulations. Throughout the Construction Phase, make such original printed record version of the Construction Contract Documents available to Contractor and Owner for review.

7. *Schedules:* Receive, review, and determine the acceptability of any and all schedules that Contractor is required to submit to Engineer, including the Progress Schedule, Schedule of Submittals, and Schedule of Values.

8. *Baselines and Benchmarks:* As appropriate, establish baselines and benchmarks for locating the Work which in Engineer's judgment are necessary to enable Contractor to proceed.

9. *Visits to Site and Observation of Construction:* In connection with observations of Contractor's Work while it is in progress:

    a. Make visits to the Site at intervals appropriate to the various stages of construction, as Engineer deems necessary, to observe as an experienced and qualified design professional the progress of Contractor's executed Work. Such visits and observations by Engineer, and the Resident Project Representative, if any, are not intended to be exhaustive or to extend to every aspect of the Work or to involve detailed inspections of the Work beyond the responsibilities specifically assigned to Engineer in this Agreement and the Construction Contract Documents, but rather are to be limited to spot checking, selective sampling, and similar methods of general observation of the Work based on Engineer's exercise of professional judgment, as assisted by the Resident Project Representative, if any. Based on information obtained during such visits and observations, Engineer will determine in general if the Work is proceeding in accordance with the Construction Contract Documents, and Engineer shall keep Owner informed of the progress of the Work.

    b. The purpose of Engineer's visits to the Site, and representation by the Resident Project Representative, if any, at the Site, will be to enable Engineer to better carry out the duties and responsibilities assigned to and undertaken by Engineer during the Construction Phase, and, in addition, by the exercise of Engineer's efforts as an experienced and qualified design professional, to provide for Owner a greater degree of confidence that the completed Work will conform in general to the Construction Contract Documents and that Contractor has implemented and maintained the integrity of the design concept of the completed Project as a functioning whole as indicated in the Construction Contract Documents. Engineer shall not, during such visits or as a result of such observations of the Work,

Copyright © 2014 National Society of Professional Engineers, American Council of Engineering Companies, and American Society of Civil Engineers. All rights reserved.

supervise, direct, or have control over the Work, nor shall Engineer have authority over or responsibility for the means, methods, techniques, sequences, or procedures of construction selected or used by any Constructor, for security or safety at the Site, for safety precautions and programs incident to any Constructor's work in progress, for the coordination of the Constructors' work or schedules, nor for any failure of any Constructor to comply with Laws and Regulations applicable to furnishing and performing of its work. Accordingly, Engineer neither guarantees the performance of any Constructor nor assumes responsibility for any Constructor's failure to furnish or perform the Work, or any portion of the Work, in accordance with the Construction Contract Documents.

10. *Defective Work:* Reject Work if, on the basis of Engineer's observations, Engineer believes that such Work is defective under the terms and standards set forth in the Construction Contract Documents. Provide recommendations to Owner regarding whether Contractor should correct such Work or remove and replace such Work, or whether Owner should consider accepting such Work as provided in the Construction Contract Documents.

11. *Compatibility with Design Concept:* If Engineer has express knowledge that a specific part of the Work that is not defective under the terms and standards set forth in the Construction Contract Documents is nonetheless not compatible with the design concept of the completed Project as a functioning whole, then inform Owner of such incompatibility, and provide recommendations for addressing such Work.

12. *Clarifications and Interpretations:* Accept from Contractor and Owner submittal of all matters in question concerning the requirements of the Construction Contract Documents (sometimes referred to as requests for information or interpretation—RFIs), or relating to the acceptability of the Work under the Construction Contract Documents. With reasonable promptness, render a written clarification, interpretation, or decision on the issue submitted, or initiate an amendment or supplement to the Construction Contract Documents.

13. *Non-reviewable Matters:* If a submitted matter in question concerns the Engineer's performance of its duties and obligations, or terms and conditions of the Construction Contract Documents that do not involve (1) the performance or acceptability of the Work under the Construction Contract Documents, (2) the design (as set forth in the Drawings, Specifications, or otherwise), or (3) other engineering or technical matters, then Engineer will promptly give written notice to Owner and Contractor that Engineer will not provide a decision or interpretation.

14. *Field Orders:* Subject to any limitations in the Construction Contract Documents, Engineer may prepare and issue Field Orders requiring minor changes in the Work.

15. *Change Orders and Work Change Directives:* Recommend Change Orders and Work Change Directives to Owner, as appropriate, and prepare Change Orders and Work Change Directives as required.

16. *Differing Site Conditions:* Respond to any notice from Contractor of differing site conditions, including conditions relating to underground facilities such as utilities, and

Copyright © 2014 National Society of Professional Engineers, American Council of Engineering Companies, and American Society of Civil Engineers. All rights reserved.

hazardous environmental conditions. Promptly conduct reviews and prepare findings, conclusions, and recommendations for Owner's use.

17. *Shop Drawings, Samples, and Other Submittals:* Review and approve or take other appropriate action with respect to Shop Drawings, Samples, and other required Contractor submittals, but only for conformance with the information given in the Construction Contract Documents and compatibility with the design concept of the completed Project as a functioning whole as indicated by the Construction Contract Documents. Such reviews and approvals or other action will not extend to means, methods, techniques, sequences, or procedures of construction or to safety precautions and programs incident thereto. Engineer shall meet any Contractor's submittal schedule that Engineer has accepted.

18. *Substitutes and "Or-equal":* Evaluate and determine the acceptability of substitute or "or-equal" materials and equipment proposed by Contractor, but subject to the provisions of Paragraph A2.02.A.2 of this Exhibit A.

19. *Inspections and Tests:*

    a. Receive and review all certificates of inspections, tests, and approvals required by Laws and Regulations or the Construction Contract Documents. Engineer's review of such certificates will be for the purpose of determining that the results certified indicate compliance with the Construction Contract Documents and will not constitute an independent evaluation that the content or procedures of such inspections, tests, or approvals comply with the requirements of the Construction Contract Documents. Engineer shall be entitled to rely on the results of such inspections and tests.

    b. As deemed reasonably necessary, request that Contractor uncover Work that is to be inspected, tested, or approved.

    c. Pursuant to the terms of the Construction Contract, require special inspections or testing of the Work, whether or not the Work is fabricated, installed, or completed.

20. *Change Proposals and Claims:* (a) Review and respond to Change Proposals. Review each duly submitted Change Proposal from Contractor and, within 30 days after receipt of the Contractor's supporting data, either deny the Change Proposal in whole, approve it in whole, or deny it in part and approve it in part. Such actions shall be in writing, with a copy provided to Owner and Contractor. If the Change Proposal does not involve the design (as set forth in the Drawings, Specifications, or otherwise), the acceptability of the Work, or other engineering or technical matters, then Engineer will notify the parties that the Engineer will not resolve the Change Proposal. (b) Provide information or data to Owner regarding engineering or technical matters pertaining to Claims.

21. *Applications for Payment:* Based on Engineer's observations as an experienced and qualified design professional and on review of Applications for Payment and accompanying supporting documentation:

    a. Determine the amounts that Engineer recommends Contractor be paid. Recommend reductions in payment (set-offs) based on the provisions for set-offs

Copyright © 2014 National Society of Professional Engineers, American Council of Engineering Companies, and American Society of Civil Engineers. All rights reserved.

stated in the Construction Contract. Such recommendations of payment will be in writing and will constitute Engineer's representation to Owner, based on such observations and review, that, to the best of Engineer's knowledge, information and belief, Contractor's Work has progressed to the point indicated, the Work is generally in accordance with the Construction Contract Documents (subject to an evaluation of the Work as a functioning whole prior to or upon Substantial Completion, to the results of any subsequent tests called for in the Construction Contract Documents, and to any other qualifications stated in the recommendation), and the conditions precedent to Contractor's being entitled to such payment appear to have been fulfilled in so far as it is Engineer's responsibility to observe the Work. In the case of unit price Work, Engineer's recommendations of payment will include final determinations of quantities and classifications of the Work (subject to any subsequent adjustments allowed by the Construction Contract Documents).

b. By recommending payment, Engineer shall not thereby be deemed to have represented that observations made by Engineer to check the quality or quantity of Contractor's Work as it is performed and furnished have been exhaustive, extended to every aspect of Contractor's Work in progress, or involved detailed inspections of the Work beyond the responsibilities specifically assigned to Engineer in this Agreement. Neither Engineer's review of Contractor's Work for the purposes of recommending payments nor Engineer's recommendation of any payment including final payment will impose on Engineer responsibility to supervise, direct, or control the Work, or for the means, methods, techniques, sequences, or procedures of construction or safety precautions or programs incident thereto, or Contractor's compliance with Laws and Regulations applicable to Contractor's furnishing and performing the Work. It will also not impose responsibility on Engineer to make any examination to ascertain how or for what purposes Contractor has used the money paid to Contractor by Owner; to determine that title to any portion of the Work, including materials or equipment, has passed to Owner free and clear of any liens, claims, security interests, or encumbrances; or that there may not be other matters at issue between Owner and Contractor that might affect the amount that should be paid.

22. *Contractor's Completion Documents:* Receive from Contractor, review, and transmit to Owner maintenance and operating instructions, schedules, guarantees, bonds, certificates or other evidence of insurance required by the Construction Contract Documents, certificates of inspection, tests and approvals, and Shop Drawings, Samples, and other data approved as provided under Paragraph A1.05.A.17. Receive from Contractor, review, and transmit to Owner the annotated record documents which are to be assembled by Contractor in accordance with the Construction Contract Documents to obtain final payment. The extent of Engineer's review of record documents shall be to check that Contractor has submitted all pages.

23. *Substantial Completion:* Promptly after notice from Contractor that Contractor considers the entire Work ready for its intended use, in company with Owner and Contractor, visit the Site to review the Work and determine the status of completion. Follow the procedures in the Construction Contract regarding the preliminary certificate of Substantial Completion, punch list of items to be completed, Owner's objections,

Copyright © 2014 National Society of Professional Engineers, American Council of Engineering Companies, and American Society of Civil Engineers. All rights reserved.

notice to Contractor, and issuance of a final certificate of Substantial Completion. Assist Owner regarding any remaining engineering or technical matters affecting Owner's use or occupancy of the Work following Substantial Completion.

24. *Other Tasks:* Perform or provide the following other Construction Phase tasks or deliverables: N/A

25. *Final Notice of Acceptability of the Work:* Conduct a final visit to the Project to determine if the Work is complete and acceptable so that Engineer may recommend, in writing, final payment to Contractor. Accompanying the recommendation for final payment, Engineer shall also provide a notice to Owner and Contractor in the form attached hereto as Exhibit E ("Notice of Acceptability of Work") that the Work is acceptable (subject to the provisions of the Notice and Paragraph A1.05.A.21.b) to the best of Engineer's knowledge, information, and belief, and based on the extent of the services provided by Engineer under this Agreement.

26. *Standards for Certain Construction-Phase Decisions:* Engineer will render decisions regarding the requirements of the Construction Contract Documents, and judge the acceptability of the Work, pursuant to the specific procedures set forth in the Construction Contract for initial interpretations, Change Proposals, and acceptance of the Work. In rendering such decisions and judgments, Engineer will not show partiality to Owner or Contractor, and will not be liable to Owner, Contractor, or others in connection with any proceedings, interpretations, decisions, or judgments conducted or rendered in good faith.

B. *Duration of Construction Phase:* The Construction Phase will commence with the execution of the first Construction Contract for the Project or any part thereof and will terminate upon written recommendation by Engineer for final payment to Contractors. If the Project involves more than one prime contract as indicated in Paragraph A1.03.D, then Construction Phase services may be rendered at different times in respect to the separate contracts. Subject to the provisions of Article 3, Engineer shall be entitled to an equitable increase in compensation if Construction Phase services (including Resident Project Representative services, if any) are required after the original date for completion and readiness for final payment of Contractor as set forth in the Construction Contract.

A1.06 *Post-Construction Phase*

A. Upon written authorization from Owner during the Post-Construction Phase, Engineer shall:

1. Together with Owner, visit the Project to observe any apparent defects in the Work, make recommendations as to replacement or correction of defective Work, if any, or the need to repair of any damage to the Site or adjacent areas, and assist Owner in consultations and discussions with Contractor concerning correction of any such defective Work and any needed repairs.

2. Together with Owner, visit the Project within one month before the end of the Construction Contract's correction period to ascertain whether any portion of the Work or the repair of any damage to the Site or adjacent areas is defective and therefore subject to correction by Contractor.

Copyright © 2014 National Society of Professional Engineers, American Council of Engineering Companies, and American Society of Civil Engineers. All rights reserved.

3. Perform or provide the following other Post-Construction Phase tasks or deliverables: N/A

B. The Post-Construction Phase services may commence during the Construction Phase and, if not otherwise modified in this Exhibit A, will terminate twelve months after the commencement of the Construction Contract's correction period.

PART 2 – ADDITIONAL SERVICES

A2.01 *Additional Services Requiring Owner's Written Authorization*

A. If authorized in writing by Owner, Engineer shall provide Additional Services of the types listed below. These services are not included as part of Basic Services and will be paid for by Owner as indicated in Exhibit C.

1. Preparation of applications and supporting documents (in addition to those furnished under Basic Services) for private or governmental grants, loans, or advances in connection with the Project; preparation or review of environmental assessments and impact statements; review and evaluation of the effects on the design requirements for the Project of any such statements and documents prepared by others; and assistance in obtaining approvals of authorities having jurisdiction over the anticipated environmental impact of the Project.

2. Services to make measured drawings of existing conditions or facilities, to conduct tests or investigations of existing conditions or facilities, or to verify the accuracy of drawings or other information furnished by Owner or others.

3. Services resulting from significant changes in the scope, extent, or character of the portions of the Project designed or specified by Engineer, or the Project's design requirements, including, but not limited to, changes in size, complexity, Owner's schedule, character of construction, or method of financing; and revising previously accepted studies, reports, Drawings, Specifications, or Construction Contract Documents when such revisions are required by changes in Laws and Regulations enacted subsequent to the Effective Date or are due to any other causes beyond Engineer's control.

4. Services resulting from Owner's request to evaluate additional Study and Report Phase alternative solutions beyond those agreed to in Paragraph A1.01.A.1 and 2.

5. Services required as a result of Owner's providing incomplete or incorrect Project information to Engineer.

6. Providing renderings or models for Owner's use, including services in support of building information modeling or civil integrated management.

7. Undertaking investigations and studies including, but not limited to:

   a. detailed consideration of operations, maintenance, and overhead expenses;

Copyright © 2014 National Society of Professional Engineers, American Council of Engineering Companies, and American Society of Civil Engineers. All rights reserved.

b. the preparation of feasibility studies (such as those that include projections of output capacity, utility project rates, project market demand, or project revenues) and cash flow analyses, provided that such services are based on the engineering and technical aspects of the Project, and do not include rendering advice regarding municipal financial products or the issuance of municipal securities;

c. preparation of appraisals;

d. evaluating processes available for licensing, and assisting Owner in obtaining process licensing;

e. detailed quantity surveys of materials, equipment, and labor; and

f. audits or inventories required in connection with construction performed or furnished by Owner.

8. Furnishing services of Consultants for other than Basic Services.

9. Providing data or services of the types described in Exhibit B, when Owner retains Engineer to provide such data or services instead of Owner furnishing the same.

10. Providing the following services:

    a. Services attributable to more prime construction contracts than specified in Paragraph A1.03.D.

    b. Services to arrange for performance of construction services for Owner by contractors other than the principal prime Contractor and administering Owner's contract for such services.

11. Services during out-of-town travel required of Engineer, other than for visits to the Site or Owner's office as required in Basic Services (Part 1 of Exhibit A).

12. Preparing for, coordinating with, participating in and responding to structured independent review processes, including, but not limited to, construction management, cost estimating, project peer review, value engineering, and constructability review requested by Owner; and performing or furnishing services required to revise studies, reports, Drawings, Specifications, or other documents as a result of such review processes.

13. Preparing additional bidding-related documents (or requests for proposals or other construction procurement documents) or Construction Contract Documents for alternate bids or cost estimates requested by Owner for the Work or a portion thereof.

14. Assistance in connection with bid protests, rebidding, or renegotiating contracts for construction, materials, equipment, or services, except when such assistance is required to complete services required by Paragraph 5.02.A and Exhibit F.

15. Preparing conformed Construction Contract Documents that incorporate and integrate the content of all Addenda and any amendments negotiated by Owner and Contractor.

Copyright © 2014 National Society of Professional Engineers, American Council of Engineering Companies, and American Society of Civil Engineers. All rights reserved.

16. Providing Construction Phase services beyond the original date for completion and readiness for final payment of Contractor, but only if such services increase the total quantity of services to be performed in the Construction Phase, rather than merely shifting performance of such services to a later date.

17. Preparing Record Drawings, and furnishing such Record Drawings to Owner.

18. Supplementing Record Drawings with information regarding the completed Project, Site, and immediately adjacent areas obtained from field observations, Owner, utility companies, and other reliable sources.

19. Conducting surveys, investigations, and field measurements to verify the accuracy of Record Drawing content obtained from Contractor, Owner, utility companies, and other sources; revise and supplement Record Drawings as needed.

20. Preparation of operation, maintenance, and staffing manuals.

21. Protracted or extensive assistance in refining and adjusting of Project equipment and systems (such as initial startup, testing, and balancing).

22. Assistance to Owner in training Owner's staff to operate and maintain Project equipment and systems.

23. Assistance to Owner in developing systems and procedures for (a) control of the operation and maintenance of Project equipment and systems, and (b) related recordkeeping.

24. Preparing to serve or serving as a consultant or witness for Owner in any litigation, arbitration, lien or bond claim, or other legal or administrative proceeding involving the Project.

25. Overtime work requiring higher than regular rates.

26. Providing construction surveys and staking to enable Contractor to perform its work other than as required under Paragraph A1.05.A.8; any type of property surveys or related engineering services needed for the transfer of interests in real property; and providing other special field surveys.

27. Providing more extensive services required to enable Engineer to issue notices or certifications requested by Owner.

28. Extensive services required during any correction period, or with respect to monitoring Contractor's compliance with warranties and guarantees called for in the Construction Contract (except as agreed to under Basic Services).

29. Other additional services performed or furnished by Engineer not otherwise provided for in this Agreement.

Copyright © 2014 National Society of Professional Engineers, American Council of Engineering Companies, and American Society of Civil Engineers. All rights reserved.

A2.02 *Additional Services Not Requiring Owner's Written Authorization*

A. Engineer shall advise Owner that Engineer is commencing to perform or furnish the Additional Services of the types listed below. For such Additional Services, Engineer need not request or obtain specific advance written authorization from Owner. Engineer shall cease performing or furnishing such Additional Services upon receipt of written notice to cease from Owner.

1. Services in connection with Work Change Directives and Change Orders to reflect changes requested by Owner.

2. Services in making revisions to Drawings and Specifications occasioned by the acceptance of substitute materials or equipment other than "or equal" items; services after the award of the Construction Contract in evaluating and determining the acceptability of a proposed "or equal" or substitution which is found to be inappropriate for the Project; evaluation and determination of an excessive number of proposed "or equals" or substitutions, whether proposed before or after award of the Construction Contract.

3. Services resulting from significant delays, changes, or price increases occurring as a direct or indirect result of materials, equipment, or energy shortages.

4. Additional or extended services arising from (a) the presence at the Site of any Constituent of Concern or items of historical or cultural significance, (b) emergencies or acts of God endangering the Work, (c) damage to the Work by fire or other causes during construction, (d) a significant amount of defective, neglected, or delayed Work, (e) acceleration of the progress schedule involving services beyond normal working hours, or (f) default by Contractor.

5. Services (other than Basic Services during the Post-Construction Phase) in connection with any partial utilization of the Work by Owner prior to Substantial Completion.

6. Evaluating unreasonable or frivolous requests for interpretation or information (RFIs), Change Proposals, or other demands from Contractor or others in connection with the Work, or an excessive number of RFIs, Change Proposals, or demands.

7. Reviewing a Shop Drawing or other Contractor submittal more than three times, as a result of repeated inadequate submissions by Contractor.

8. While at the Site, compliance by Engineer and its staff with those terms of Owner's or Contractor's safety program provided to Engineer subsequent to the Effective Date that exceed those normally required of engineering personnel by federal, State, or local safety authorities for similar construction sites.

Copyright © 2014 National Society of Professional Engineers, American Council of Engineering Companies, and American Society of Civil Engineers. All rights reserved.

This is **EXHIBIT B**, consisting of 3 pages, referred to in and part of the **Agreement between Owner and Engineer for Professional Services** dated _____.

Owner's Responsibilities

Article 2 of the Agreement is supplemented to include the following agreement of the parties.

B2.01 In addition to other responsibilities of Owner as set forth in this Agreement, Owner shall at its expense:

A. Provide Engineer with all criteria and full information as to Owner's requirements for the Project, including design objectives and constraints, space, capacity and performance requirements, flexibility, and expandability, and any budgetary limitations.

B. Give instructions to Engineer regarding Owner's procurement of construction services (including instructions regarding advertisements for bids, instructions to bidders, and requests for proposals, as applicable), Owner's construction contract practices and requirements, insurance and bonding requirements, electronic transmittals during construction, and other information necessary for the finalization of Owner's bidding-related documents (or requests for proposals or other construction procurement documents), and Construction Contract Documents. Furnish copies (or give specific directions requesting Engineer to use copies already in Engineer's possession) of all design and construction standards, Owner's standard forms, general conditions (if other than EJCDC® C-700, Standard General Conditions of the Construction Contract, 2013 Edition), supplementary conditions, text, and related documents and content for Engineer to include in the draft bidding-related documents (or requests for proposals or other construction procurement documents), and draft Construction Contract Documents, when applicable. Owner shall have responsibility for the final content of (1) such bidding-related documents (or requests for proposals or other construction procurement documents), and (2) those portions of any Construction Contract other than the design (as set forth in the Drawings, Specifications, or otherwise), and other engineering or technical matters; and Owner shall seek the advice of Owner's legal counsel, risk managers, and insurance advisors with respect to the drafting and content of such documents.

C. Furnish to Engineer any other available information pertinent to the Project including reports and data relative to previous designs, construction, or investigation at or adjacent to the Site.

D. Following Engineer's assessment of initially-available Project information and data and upon Engineer's request, obtain, furnish, or otherwise make available (if necessary through title searches, or retention of specialists or consultants) such additional Project-related information and data as is reasonably required to enable Engineer to complete its Basic and Additional Services. Such additional information or data would generally include the following:

1. Property descriptions.

2. Zoning, deed, and other land use restrictions.

Copyright © 2014 National Society of Professional Engineers, American Council of Engineering Companies, and American Society of Civil Engineers. All rights reserved.

3. Utility and topographic mapping and surveys.

4. Property, boundary, easement, right-of-way, and other special surveys or data, including establishing relevant reference points.

5. Explorations and tests of subsurface conditions at or adjacent to the Site; geotechnical reports and investigations; drawings of physical conditions relating to existing surface or subsurface structures at the Site; hydrographic surveys, laboratory tests and inspections of samples, materials, and equipment; with appropriate professional interpretation of such information or data.

6. Environmental assessments, audits, investigations, and impact statements, and other relevant environmental, historical, or cultural studies relevant to the Project, the Site, and adjacent areas.

7. Data or consultations as required for the Project but not otherwise identified in this Agreement.

E. Arrange for safe access to and make all provisions for Engineer to enter upon public and private property as required for Engineer to perform services under the Agreement.

F. Recognizing and acknowledging that Engineer's services and expertise do not include the following services, provide, as required for the Project:

1. Accounting, bond and financial advisory (including, if applicable, “municipal advisor” services as described in Section 975 of the Dodd-Frank Wall Street Reform and Consumer Protection Act (2010) and the municipal advisor registration rules issued by the Securities and Exchange Commission), independent cost estimating, and insurance counseling services.

2. Legal services with regard to issues pertaining to the Project as Owner requires, Contractor raises, or Engineer reasonably requests.

3. Such auditing services as Owner requires to ascertain how or for what purpose Contractor has used the money paid.

G. Provide the services of an independent testing laboratory to perform all inspections, tests, and approvals of samples, materials, and equipment required by the Construction Contract Documents (other than those required to be furnished or arranged by Contractor), or to evaluate the performance of materials, equipment, and facilities of Owner, prior to their incorporation into the Work with appropriate professional interpretation thereof. Provide Engineer with the findings and reports generated by testing laboratories, including findings and reports obtained from or through Contractor.

H. Provide reviews, approvals, and permits from all governmental authorities having jurisdiction to approve all phases of the Project designed or specified by Engineer and such reviews, approvals, and consents from others as may be necessary for completion of each phase of the Project.

Copyright © 2014 National Society of Professional Engineers, American Council of Engineering Companies, and American Society of Civil Engineers. All rights reserved.

I. Advise Engineer of the identity and scope of services of any independent consultants employed by Owner to perform or furnish services in regard to the Project, including, but not limited to, cost estimating, project peer review, value engineering, and constructability review.

J. If Owner designates a construction manager or an individual or entity other than, or in addition to, Engineer to represent Owner at the Site, define and set forth as an attachment to this Exhibit B the duties, responsibilities, and limitations of authority of such other party and the relation thereof to the duties, responsibilities, and authority of Engineer.

K. If more than one prime contract is to be awarded for the Work designed or specified by Engineer, then designate a person or entity to have authority and responsibility for coordinating the activities among the various prime Contractors, and define and set forth the duties, responsibilities, and limitations of authority of such individual or entity and the relation thereof to the duties, responsibilities, and authority of Engineer as an attachment to this Exhibit B that is to be mutually agreed upon and made a part of this Agreement before such services begin.

L. Inform Engineer in writing of any specific requirements of safety or security programs that are applicable to Engineer, as a visitor to the Site.

M. Examine all alternative solutions, studies, reports, sketches, Drawings, Specifications, proposals, and other documents presented by Engineer (including obtaining advice of an attorney, risk manager, insurance counselor, financial/municipal advisor, and other advisors or consultants as Owner deems appropriate with respect to such examination) and render in writing timely decisions pertaining thereto.

N. Inform Engineer regarding any need for assistance in evaluating the possible use of Project Strategies, Technologies, and Techniques, as defined in Exhibit A.

O. Advise Engineer as to whether Engineer's assistance is requested in identifying opportunities for enhancing the sustainability of the Project.

P. Place and pay for advertisement for Bids in appropriate publications.

Q. Furnish to Engineer data as to Owner's anticipated costs for services to be provided by others (including, but not limited to, accounting, bond and financial, independent cost estimating, insurance counseling, and legal advice) for Owner so that Engineer may assist Owner in collating the various cost categories which comprise Total Project Costs.

R. Attend and participate in the pre-bid conference, bid opening, pre-construction conferences, construction progress and other job related meetings, and Site visits to determine Substantial Completion and readiness of the completed Work for final payment.

S. Authorize Engineer to provide Additional Services as set forth in Part 2 of Exhibit A of the Agreement, as required.

T. Perform or provide the following: N/A

Copyright © 2014 National Society of Professional Engineers, American Council of Engineering Companies, and American Society of Civil Engineers. All rights reserved.

This is **EXHIBIT C**, consisting of **6** pages, referred to in and part of the Agreement between Owner and Engineer for Professional Services dated _____.

Payments to Engineer for Services and Reimbursable Expenses
Basic Services – Lump Sum

Article 2 of the Agreement is supplemented to include the following agreement of the parties:

ARTICLE 2 – OWNER'S RESPONSIBILITIES

C2.01 *Compensation for Basic Services (other than Resident Project Representative) – Lump Sum Method of Payment*

U. Owner shall pay Engineer for Basic Services set forth in Exhibit A, except for services of Engineer's Resident Project Representative, if any, as follows:

1. A Lump Sum amount of **$108,654.00** based on the following estimated distribution of compensation:

a.	Preliminary Design Phase	$**32,596.00**
b.	Final Design Phase	$**69,539.00**
c.	Bidding and Negotiating Phase	$ **2,173.00**
d.	Construction Phase	$ **2,173.00**
e.	Post-Construction Phase	$ **2,173.00**

2. Engineer may alter the distribution of compensation between individual phases noted herein to be consistent with services actually rendered, but shall not exceed the total Lump Sum amount unless approved in writing by the Owner.

3. The Lump Sum includes compensation for Engineer's services and services of Engineer's Consultants, if any. Appropriate amounts have been incorporated in the Lump Sum to account for labor costs, overhead, profit, expenses (other than any expressly allowed Reimbursable Expenses), and Consultant charges.

4. In addition to the Lump Sum, Engineer is also entitled to reimbursement from Owner for the following Reimbursable Expenses (see Appendix 1 for rates or charges): None.

5. The portion of the Lump Sum amount billed for Engineer's services will be based upon Engineer's estimate of the percentage of the total services actually completed during the billing period. If any Reimbursable Expenses are expressly allowed, Engineer may also bill for any such Reimbursable Expenses incurred during the billing period.

Copyright © 2014 National Society of Professional Engineers, American Council of Engineering Companies, and American Society of Civil Engineers. All rights reserved.

V. *Period of Service:* The compensation amount stipulated in Compensation Packet BC-1 is conditioned on a period of service not exceeding 12 months. If such period of service is extended, the compensation amount for Engineer's services shall be appropriately adjusted.

Copyright © 2014 National Society of Professional Engineers, American Council of Engineering Companies, and American Society of Civil Engineers. All rights reserved.

Resident Project Representative – Standard Hourly Rates

Article 2 of the Agreement is supplemented to include the following agreement of the parties:

C2.04 *Compensation for Resident Project Representative Basic Services – Standard Hourly Rates Method of Payment*

W. *Owner shall pay Engineer for Resident Project Representative Basic Services as follows:*

1. *Resident Project Representative Services:* For services of Engineer's Resident Project Representative under Paragraph A1.05.A of Exhibit A, an amount equal to the cumulative hours charged to the Project by each class of Engineer's personnel times Standard Hourly Rates for each applicable billing class for all Resident Project Representative services performed on the Project, plus related Reimbursable Expenses and Engineer's Consultant's charges, if any. The total compensation under this paragraph is estimated to be **$84,774.00** based a **200** day construction schedule.

X. *Compensation for Reimbursable Expenses:*

1. For those Reimbursable Expenses that are not accounted for in the compensation for Basic Services under Paragraph C2.01, and are directly related to the provision of Resident Project Representative or Post-Construction Basic Services, Owner shall pay Engineer at the rates set forth in Appendix 1 to this Exhibit C.

2. Reimbursable Expenses include the expenses identified in Appendix 1 and the following: transportation (including mileage), lodging, and subsistence incidental thereto; providing and maintaining field office facilities including furnishings and utilities; subsistence and transportation of Resident Project Representative and assistants; toll telephone calls, mobile phone charges, and courier charges; reproduction of reports, Drawings, Specifications, bidding-related or other procurement documents, Construction Contract Documents, and similar Project-related items. In addition, if authorized in advance by Owner, Reimbursable Expenses will also include expenses incurred for the use of highly specialized equipment.

3. The amounts payable to Engineer for Reimbursable Expenses, if any, will be those internal expenses related to the Resident Project Representative Basic Services that are actually incurred or allocated by Engineer, plus all invoiced external Reimbursable Expenses allocable to such services, the latter multiplied by a factor of **1.1**.

4. The Reimbursable Expenses Schedule will be adjusted annually (as of **January 1, 2019**) to reflect equitable changes in the compensation payable to Engineer.

Y. *Other Provisions Concerning Payment Under this Paragraph C2.04:*

1. Whenever Engineer is entitled to compensation for the charges of Engineer's Consultants, those charges shall be the amounts billed by Engineer's Consultants to Engineer times a factor of **1.1**.

Copyright © 2014 National Society of Professional Engineers, American Council of Engineering Companies, and American Society of Civil Engineers. All rights reserved.

2. *Factors*: The external Reimbursable Expenses and Engineer's Consultant's factors include Engineer's overhead and profit associated with Engineer's responsibility for the administration of such services and costs.

3. *Estimated Compensation Amounts*:

   a. Engineer's estimate of the amounts that will become payable for specified services are only estimates for planning purposes, are not binding on the parties, and are not the minimum or maximum amounts payable to Engineer under the Agreement.

   b. When estimated compensation amounts have been stated herein and it subsequently becomes apparent to Engineer that the total compensation amount thus estimated will be exceeded, Engineer shall give Owner written notice thereof, allowing Owner to consider its options, including suspension or termination of Engineer's services for Owner's convenience. Upon notice Owner and Engineer promptly shall review the matter of services remaining to be performed and compensation for such services. Owner shall either exercise its right to suspend or terminate Engineer's services for Owner's convenience, agree to such compensation exceeding said estimated amount, or agree to a reduction in the remaining services to be rendered by Engineer, so that total compensation for such services will not exceed said estimated amount when such services are completed. If Owner decides not to suspend Engineer's services during negotiations and Engineer exceeds the estimated amount before Owner and Engineer have agreed to an increase in the compensation due Engineer or a reduction in the remaining services, then Engineer shall be paid for all services rendered hereunder.

To the extent necessary to verify Engineer's charges and upon Owner's timely request, Engineer shall make copies of such records available to Owner at cost.

Copyright © 2014 National Society of Professional Engineers, American Council of Engineering Companies, and American Society of Civil Engineers. All rights reserved.

Article 2 of the Agreement is supplemented to include the following agreement of the parties:

C2.05 Compensation for Additional Services – Standard Hourly Rates Method of Payment

A. Owner shall pay Engineer for Additional Services, if any, as follows:

1. *General*: For services of Engineer's personnel engaged directly on the Project pursuant to Paragraph A2.01 or A2.02 of Exhibit A, except for services as a consultant or witness under Paragraph A2.01.A.20, (which if needed shall be separately negotiated based on the nature of the required consultation or testimony) an amount equal to the cumulative hours charged to the Project by each class of Engineer's personnel times Standard Hourly Rates for each applicable billing class for all Additional Services performed on the Project, plus related Reimbursable Expenses and Engineer's Consultant's charges, if any.

B. *Compensation For Reimbursable Expenses:*

1. For those Reimbursable Expenses that are not accounted for in the compensation for Basic Services under Paragraph C2.01 and are directly related to the provision of Additional Services, Owner shall pay Engineer at the rates set forth in Appendix 1 to this Exhibit C.

2. Reimbursable Expenses include the expenses identified in Appendix 1 and the following categories: transportation (including mileage), lodging, and subsistence incidental thereto; providing and maintaining field office facilities including furnishings and utilities; toll telephone calls, mobile phone charges, and courier charges; reproduction of reports, Drawings, Specifications, bidding-related or other procurement documents, Construction Contract Documents, and similar Project-related items; and Consultants' charges. In addition, if authorized in advance by Owner, Reimbursable Expenses will also include expenses incurred for the use of highly specialized equipment.

3. The amounts payable to Engineer for Reimbursable Expenses, if any, will be the Additional Services-related internal expenses actually incurred or allocated by Engineer, plus all invoiced external Reimbursable Expenses allocable to such Additional Services, the latter multiplied by a factor of **1.1**.

4. The Reimbursable Expenses Schedule will be adjusted annually (as of January 1, 2019) to reflect equitable changes in the compensation payable to Engineer.

C. *Other Provisions Concerning Payment for Additional Services:*

1. Whenever Engineer is entitled to compensation for the charges of Engineer's Consultants, those charges shall be the amounts billed by Engineer's Consultants to Engineer times a factor of **1.1**.

Copyright © 2014 National Society of Professional Engineers, American Council of Engineering Companies, and American Society of Civil Engineers. All rights reserved.

2. *Factors:* The external Reimbursable Expenses and Engineer's Consultant's Factors include Engineer's overhead and profit associated with Engineer's responsibility for the administration of such services and costs.

3. To the extent necessary to verify Engineer's charges and upon Owner's timely request, Engineer shall make copies of such records available to Owner at cost.

Copyright © 2014 National Society of Professional Engineers, American Council of Engineering Companies, and American Society of Civil Engineers. All rights reserved.

This is **Appendix 2 to EXHIBIT C**, consisting of **1** pages, referred to in and part of the **Agreement between Owner and Engineer for Professional Services** dated _____.

Standard Hourly Rates Schedule - 2017

A. *Standard Hourly Rates:*

1. Standard Hourly Rates are set forth in this Appendix 2 to this Exhibit C and include salaries and wages paid to personnel in each billing class plus the cost of customary and statutory benefits, general and administrative overhead, non-project operating costs, and operating margin or profit.

2. The Standard Hourly Rates apply only as specified in Article C2.

B. *Schedule:*

Hourly rates for services performed on or after the date of the Agreement are:

Senior Engineer	**$175/hour**
Project Engineer	**$150/hour**
Junior Engineer	**$125/hour**
Engineering Intern	**$105/hour**
Graduate Engineer	**$105/hour**
Senior AutoCad Technician	**$105/hour**
AutoCad Technician	**$90/hour**
Senior Resident Project Representative	**$95/hour**
Resident Project Representative	**$85/hour**
Field Crew	**$175/hour**
Administrative	**$45/hour**

Copyright © 2014 National Society of Professional Engineers, American Council of Engineering Companies, and American Society of Civil Engineers. All rights reserved.

This is **EXHIBIT D**, consisting of 5 pages, referred to in and part of the **Agreement between Owner and Engineer for Professional Services** dated _____.

Duties, Responsibilities, and Limitations of Authority of Resident Project Representative

Article 1 of the Agreement is supplemented to include the following agreement of the parties:

ARTICLE 1 - SERVICES OF ENGINEER

D1.01 *Resident Project Representative*

A. Engineer shall furnish a Resident Project Representative ("RPR") to assist Engineer in observing progress and quality of the Work. The RPR may provide full time representation or may provide representation to a lesser degree. RPR is Engineer's representative at the Site, will act as directed by and under the supervision of Engineer, and will confer with Engineer regarding RPR's actions.

B. Through RPR's observations of the Work, including field checks of materials and installed equipment, Engineer shall endeavor to provide further protection for Owner against defects and deficiencies in the Work. However, Engineer shall not, as a result of such RPR observations of the Work, supervise, direct, or have control over the Work, nor shall Engineer (including the RPR) have authority over or responsibility for the means, methods, techniques, sequences, or procedures of construction selected or used by any Constructor, for security or safety at the Site, for safety precautions and programs incident to the Work or any Constructor's work in progress, for the coordination of the Constructors' work or schedules, or for any failure of any Constructor to comply with Laws and Regulations applicable to the performing and furnishing of its work. The Engineer (including RPR) neither guarantees the performances of any Constructor nor assumes responsibility for any Constructor's failure to furnish and perform the Work, or any portion of the Work, in accordance with the Construction Contract Documents. In addition, the specific terms set forth in Exhibit A, Paragraph A1.05, of this Agreement are applicable.

C. The duties and responsibilities of the RPR are as follows:

1. *General:* RPR's dealings in matters pertaining to the Work in general shall be with Engineer and Contractor. RPR's dealings with Subcontractors shall only be through or with the full knowledge and approval of Contractor. RPR shall generally communicate with Owner only with the knowledge of and under the direction of Engineer.

2. *Schedules:* Review the progress schedule, schedule of Shop Drawing and Sample submittals, schedule of values, and other schedules prepared by Contractor and consult with Engineer concerning acceptability of such schedules.

3. *Conferences and Meetings:* Attend meetings with Contractor, such as preconstruction conferences, progress meetings, job conferences, and other Project-related meetings (but not including Contractor's safety meetings), and as appropriate prepare and circulate copies of minutes thereof.

Copyright © 2014 National Society of Professional Engineers, American Council of Engineering Companies, and American Society of Civil Engineers. All rights reserved.

4. *Safety Compliance:* Comply with Site safety programs, as they apply to RPR, and if required to do so by such safety programs, receive safety training specifically related to RPR's own personal safety while at the Site.

5. *Liaison:*

    a. Serve as Engineer's liaison with Contractor. Working principally through Contractor's authorized representative or designee, assist in providing information regarding the provisions and intent of the Construction Contract Documents.

    b. Assist Engineer in serving as Owner's liaison with Contractor when Contractor's operations affect Owner's on-Site operations.

    c. Assist in obtaining from Owner additional details or information, when required for proper execution of the Work.

6. *Clarifications and Interpretations:* Receive from Contractor submittal of any matters in question concerning the requirements of the Construction Contract Documents (sometimes referred to as requests for information or interpretation—RFIs), or relating to the acceptability of the Work under the Construction Contract Documents. Report to Engineer regarding such RFIs. Report to Engineer when clarifications and interpretations of the Construction Contract Documents are needed, whether as the result of a Contractor RFI or otherwise. Transmit Engineer's clarifications, interpretations, and decisions to Contractor. ,

7. *Shop Drawings and Samples:*

    a. Record date of receipt of Samples and Contractor-approved Shop Drawings.

    b. Receive Samples that are furnished at the Site by Contractor and notify Engineer of availability of Samples for examination.

    c. Advise Engineer and Contractor of the commencement of any portion of the Work requiring a Shop Drawing or Sample submittal, if RPR believes that the submittal has not been received from Contractor or has not been approved by Contractor or Engineer.

8. *Proposed* M*odifications:* Consider and evaluate Contractor's suggestions for modifications to the Drawings or Specifications, and report such suggestions, together with RPR's recommendations, if any, to Engineer. Transmit Engineer's response (if any) to such suggestions to Contractor.

9. *Review of Work; Defective Work:*

    a. Report to Engineer whenever RPR believes that any part of the Work is defective under the terms and standards set forth in the Construction Contract Documents and provide recommendations as to whether such Work should be corrected, removed and replaced, or accepted as provided in the Construction Contract Documents.

Copyright © 2014 National Society of Professional Engineers, American Council of Engineering Companies, and American Society of Civil Engineers. All rights reserved.

b. Inform Engineer of any Work that RPR believes is not defective under the terms and standards set forth in the Construction Contract Documents, but is nonetheless not compatible with the design concept of the completed Project as a functioning whole, and provide recommendations to Engineer for addressing such Work; and

c. Advise Engineer of that part of the Work that RPR believes should be uncovered for observation, or requires special testing, inspection, or approval.

10. *Inspections, Tests, and System Start-ups:*

a. Consult with Engineer in advance of scheduled inspections, tests, and systems start-ups.

b. Verify that tests, equipment, and systems start-ups and operating and maintenance training are conducted in the presence of appropriate Owner's personnel, and that Contractor maintains adequate records thereof.

c. Observe, record, and report to Engineer appropriate details relative to the test procedures and systems start-ups.

d. Observe whether Contractor has arranged for inspections required by Laws and Regulations, including but not limited to those to be performed by public or other agencies having jurisdiction over the Work.

e. Accompany visiting inspectors representing public or other agencies having jurisdiction over the Work, record the results of these inspections, and report to Engineer.

11. *Records*:

a. Maintain at the Site orderly files for correspondence, reports of job conferences, copies of Construction Contract Documents including all Change Orders, Field Orders, Work Change Directives, Addenda, additional Drawings issued subsequent to the execution of the Construction Contract, RFIs, Engineer's clarifications and interpretations of the Construction Contract Documents, progress reports, approved Shop Drawing and Sample submittals, and other Project-related documents.

b. Prepare a daily report or keep a diary or log book, recording Contractor's hours on the Site, Subcontractors present at the Site, weather conditions, data relative to questions of Change Orders, Field Orders, Work Change Directives, or changed conditions, Site visitors, deliveries of equipment or materials, daily activities, decisions, observations in general, and specific observations in more detail as in the case of observing test procedures; and send copies to Engineer.

c. Upon request from Owner to Engineer, photograph or video Work in progress or Site conditions.

d. Record and maintain accurate, up-to-date lists of the names, addresses, fax numbers, e-mail addresses, websites, and telephone numbers (including mobile

Copyright © 2014 National Society of Professional Engineers, American Council of Engineering Companies, and American Society of Civil Engineers. All rights reserved.

numbers) of all Contractors, Subcontractors, and major Suppliers of materials and equipment.

e. Maintain records for use in preparing Project documentation.

f. Upon completion of the Work, furnish original set of all RPR Project documentation to Engineer.

12. *Reports:*

a. Furnish to Engineer periodic reports as required of progress of the Work and of Contractor's compliance with the progress schedule and schedule of Shop Drawing and Sample submittals.

b. Draft and recommend to Engineer proposed Change Orders, Work Change Directives, and Field Orders. Obtain backup material from Contractor.

c. Furnish to Engineer and Owner copies of all inspection, test, and system start-up reports.

d. Immediately inform Engineer of the occurrence of any Site accidents, emergencies, acts of God endangering the Work, possible force majeure or delay events, damage to property by fire or other causes, or the discovery of any potential differing site condition or Constituent of Concern.

13. *Payment Requests:* Review applications for payment with Contractor for compliance with the established procedure for their submission and forward with recommendations to Engineer, noting particularly the relationship of the payment requested to the schedule of values, Work completed, and materials and equipment delivered at the Site but not incorporated in the Work.

14. *Certificates, Operation and Maintenance Manuals:* During the course of the Work, verify that materials and equipment certificates, operation and maintenance manuals and other data required by the Contract Documents to be assembled and furnished by Contractor are applicable to the items actually installed and in accordance with the Contract Documents, and have these documents delivered to Engineer for review and forwarding to Owner prior to payment for that part of the Work.

15. *Completion*:

a. Participate in Engineer's visits to the Site regarding Substantial Completion, assist in the determination of Substantial Completion, and prior to the issuance of a Certificate of Substantial Completion submit a punch list of observed items requiring completion or correction.

b. Participate in Engineer's visit to the Site in the company of Owner and Contractor, to determine completion of the Work, and prepare a final punch list of items to be completed or corrected by Contractor.

Copyright © 2014 National Society of Professional Engineers, American Council of Engineering Companies, and American Society of Civil Engineers. All rights reserved.

c. Observe whether all items on the final punch list have been completed or corrected, and make recommendations to Engineer concerning acceptance and issuance of the Notice of Acceptability of the Work.

D. Resident Project Representative shall not:

1. Authorize any deviation from the Construction Contract Documents or substitution of materials or equipment (including "or-equal" items).

2. Exceed limitations of Engineer's authority as set forth in this Agreement.

3. Undertake any of the responsibilities of Contractor, Subcontractors, or Suppliers, or any Constructor.

4. Advise on, issue directions relative to, or assume control over any aspect of the means, methods, techniques, sequences or procedures of the Work, by Contractor or any other Constructor.

5. Advise on, issue directions regarding, or assume control over security or safety practices, precautions, and programs in connection with the activities or operations of Owner or Contractor.

6. Participate in specialized field or laboratory tests or inspections conducted off-site by others except as specifically authorized by Engineer.

7. Accept Shop Drawing or Sample submittals from anyone other than Contractor.

8. Authorize Owner to occupy the Project in whole or in part.

Copyright © 2014 National Society of Professional Engineers, American Council of Engineering Companies, and American Society of Civil Engineers. All rights reserved.

This is **EXHIBIT G**, consisting of 2 pages, referred to in and part of the **Agreement between Owner and Engineer for Professional Services** dated _____.

Insurance

Paragraph 6.05 of the Agreement is supplemented to include the following agreement of the parties:

G6.05 *Insurance*

A. The limits of liability for the insurance required by Paragraph 6.05.A and 6.05.B of the Agreement are as follows:

1. By Engineer:

a. Workers' Compensation: Statutory

b. Employer's Liability --

1) Bodily injury, each accident: $100,000
2) Bodily injury by disease, each employee: $100,000
3) Bodily injury/disease, aggregate: $500,000

c. General Liability --

1) Each Occurrence (Bodily Injury and Property Damage): $1,000,000
2) General Aggregate: $2,000,000

d. Excess or Umbrella Liability --

1) Per Occurrence: $2,000,000
2) General Aggregate:

e. Automobile Liability --Combined Single Limit (Bodily Injury and Property Damage):

$1,000,000

f. Professional Liability –

1) Each Claim Made $1,000,000
2) Annual Aggregate $1,000,000

g. Other (specify): N/A

Copyright © 2014 National Society of Professional Engineers, American Council of Engineering Companies, and American Society of Civil Engineers. All rights reserved.

B. *Additional Insureds:*

1. The following individuals or entities are to be listed on Owner's general liability policies of insurance as additional insureds:

   a. Shows, Dearman and Waits, Inc.
   Engineer

   b. N/A
   Engineer's Consultant

   c. N/A
   Engineer's Consultant

   d. N/A
   [other]

2. During the term of this Agreement the Engineer shall notify Owner of any other Consultant to be listed as an additional insured on Owner's general liability policies of insurance.

3. The Owner shall be listed on Engineer's general liability policy as provided in Paragraph 6.05.A.

Copyright © 2014 National Society of Professional Engineers, American Council of Engineering Companies, and American Society of Civil Engineers. All rights reserved.

This is **EXHIBIT I**, consisting of **1** pages, referred to in and part of the **Agreement between Owner and Engineer for Professional Services** dated _____.

Limitations of Liability

Paragraph 6.11 of the Agreement is supplemented to include the following agreement of the parties:

A. *Limitation of Engineer's Liability*

1. *Engineer's Liability Limited to Amount of Engineer's Compensation:* To the fullest extent permitted by Laws and Regulations, and notwithstanding any other provision of this Agreement, the total liability, in the aggregate, of Engineer and Engineer's officers, directors, members, partners, agents, employees, and Consultants, to Owner and anyone claiming by, through, or under Owner for any and all claims, losses, costs, or damages whatsoever arising out of, resulting from, or in any way related to the Project or the Agreement from any cause or causes, including but not limited to the negligence, professional errors or omissions, strict liability, breach of contract, indemnity obligations, or warranty express or implied of Engineer or Engineer's officers, directors, members, partners, agents, employees, or Consultants shall not exceed the total compensation received by Engineer under this Agreement.

B. *Indemnification by Owner*: To the fullest extent permitted by Laws and Regulations, Owner shall indemnify and hold harmless Engineer and its officers, directors, members, partners, agents, employees, and Consultants from and against any and all claims, costs, losses, and damages (including but not limited to all fees and charges of engineers, architects, attorneys, and other professionals, and all court, arbitration, or other dispute resolution costs) arising out of or relating to the Project, provided that any such claim, cost, loss, or damage is attributable to bodily injury, sickness, disease, or death or to injury to or destruction of tangible property (other than the Work itself), including the loss of use resulting therefrom, but only to the extent caused by any negligent act or omission of Owner or Owner's officers, directors, members, partners, agents, employees, consultants, or others retained by or under contract to the Owner with respect to this Agreement or to the Project.

Copyright © 2014 National Society of Professional Engineers, American Council of Engineering Companies, and American Society of Civil Engineers. All rights reserved.

Copyright © 2014 National Society of Professional Engineers, American Council of Engineering Companies,
and American Society of Civil Engineers. All rights reserved.

Opinion of Probable Costs	Proj. No.: 11275	Date: July 6, 2018

Audubon-Westwood & Lynnwood Neighborhoods, Shadowwood Drive and Huckleberry Lane

Water Improvements Project

Item	Description	Unit	Quantity	Unit Price	Extension
1	Ridgeway Lane	Lin. Ft.	1,750	$100.00	$175,000.00
2	Evergreen Lane	Lin. Ft.	600	$100.00	$60,000.00
3	Woodhaven Drive	Lin. Ft.	900	$100.00	$90,000.00
4	Pineview Drive	Lin. Ft.	650	$100.00	$65,000.00
5	1st Terrace	Lin. Ft.	1,350	$100.00	$135,000.00
6	2nd Terrace	Lin. Ft.	1,350	$100.00	$135,000.00
7	3rd Terrace	Lin. Ft.	1,350	$100.00	$135,000.00
8	Huckleberry Lane	Lin. Ft.	500	$100.00	$50,000.00
9	Shadowwood Drive	Lin. Ft.	550	$100.00	$55,000.00
				Project Subtotal:	$900,000.00
		20%		Contingencies:	$180,000.00
				Project Total:	$1,080,000.00
				Engineering:	$98,280.00
				Construction E & I:	$76,680.00
				Project GrandTotal:	$1,254,960.00

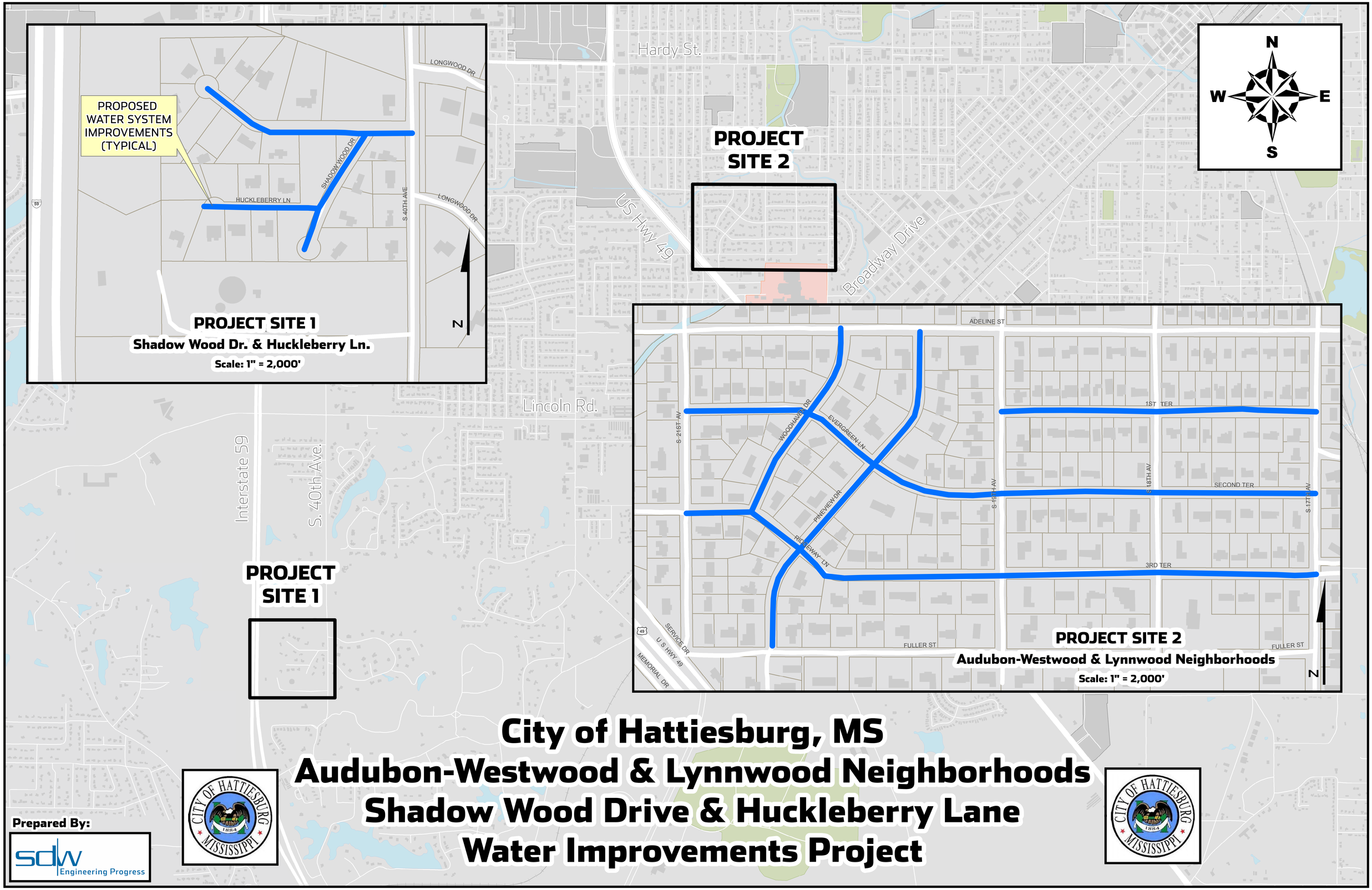
PROPOSED WATER SYSTEM IMPROVEMENTS (TYPICAL)
LONGWOOD DR.
SHADOW WOOD DR.
HUCKLEBERRY LN
S. 40TH AVE
PROJECT SITE 1
Shadow Wood Dr. & Huckleberry Ln.
Scale: 1" = 2,000'
N
Hardy St.
PROJECT SITE 2
US Hwy 49
Broadway Drive
Lincoln Rd.
Interstate 59
S. 40th Ave.
PROJECT SITE 1
N
W
E
S
ADELINE ST
WOODHAVEN DR.
EVERGREEN LN
PINEVIEW DR.
RIDGEWAY LN
S 21ST AV
S 19TH AV
S 18TH AV
S 17TH AV
1ST TER
SECOND TER
3RD TER
FULLER ST
SERVICE DR
U S HWY 49
MEMORIAL DR
PROJECT SITE 2
Audubon-Westwood & Lynnwood Neighborhoods
Scale: 1" = 2,000'
N
City of Hattiesburg, MS
Audubon-Westwood & Lynnwood Neighborhoods
Shadow Wood Drive & Huckleberry Lane
Water Improvements Project
Prepared By:
sdw Engineering Progress
CITY OF HATTIESBURG MISSISSIPPI 1884

This document has important legal consequences; consultation with an attorney is encouraged with respect to its use or modification. This document should be adapted to the particular circumstances of the contemplated Project and the controlling Laws and Regulations.

AGREEMENT
BETWEEN OWNER AND ENGINEER
FOR PROFESSIONAL SERVICES

Prepared by

EJCDC
ENGINEERS JOINT CONTRACT DOCUMENTS COMMITTEE

Issued and Published Jointly by

ACEC
AMERICAN COUNCIL OF ENGINEERING COMPANIES

ASCE
AMERICAN SOCIETY OF CIVIL ENGINEERS

National Society of Professional Engineers®

EJCDC® E-500, Agreement Between Owner and Engineer for Professional Services.
Copyright © 2014 National Society of Professional Engineers, American Council of Engineering Companies, and American Society of Civil Engineers. All rights reserved.

This Agreement has been prepared for use with EJCDC® C-700, Standard General Conditions of the Construction Contract, 2013 Edition. Their provisions are interrelated, and a change in one may necessitate a change in the other. For guidance on the completion and use of this Agreement, see EJCDC® E-001, Commentary on the EJCDC Engineering Services Agreements, 2013 Edition.

Copyright © 2014:

National Society of Professional Engineers

1420 King Street, Alexandria, VA 22314-2794

(703) 684-2882

www.nspe.org

American Council of Engineering Companies

1015 15th Street N.W., Washington, DC 20005

(202) 347-7474

www.acec.org

American Society of Civil Engineers

1801 Alexander Bell Drive, Reston, VA 20191-4400

(800) 548-2723

www.asce.org

The copyright for this EJCDC document is owned jointly by the three sponsoring organizations listed above. The National Society of Professional Engineers is the Copyright Administrator for the EJCDC documents; please direct all inquiries regarding EJCDC copyrights to NSPE.

NOTE: EJCDC publications may be purchased at www.ejcdc.org, or from any of the sponsoring organizations above.

TABLE OF CONTENTS

Page

ARTICLE 1 – SERVICES OF ENGINEER 1
1.01 Scope 1

ARTICLE 2 – OWNER'S RESPONSIBILITIES 1
2.01 General 1

ARTICLE 3 – SCHEDULE FOR RENDERING SERVICES 2
3.01 Commencement 2
3.02 Time for Completion 2

ARTICLE 4 – INVOICES AND PAYMENTS 2
4.01 Invoices 2
4.02 Payments 2

ARTICLE 5 – OPINIONS OF COST 3
5.01 Opinions of Probable Construction Cost 3
5.02 Designing to Construction Cost Limit 3
5.03 Opinions of Total Project Costs 3

ARTICLE 6 – GENERAL CONSIDERATIONS 4
6.01 Standards of Performance 4
6.02 Design Without Construction Phase Services 5
6.03 Use of Documents 6
6.04 Electronic Transmittals 6
6.05 Insurance 7
6.06 Suspension and Termination 8
6.07 Controlling Law 9
6.08 Successors, Assigns, and Beneficiaries 9
6.09 Dispute Resolution 10
6.10 Environmental Condition of Site 10
6.11 Indemnification and Mutual Waiver 11
6.12 Records Retention 12
6.13 Miscellaneous Provisions 12

ARTICLE 7 – DEFINITIONS 12
7.01 Defined Terms 12

ARTICLE 8 – EXHIBITS AND SPECIAL PROVISIONS 16
8.01 Exhibits Included: 16
8.02 Total Agreement 17
8.03 Designated Representatives 17
8.04 Engineer's Certifications 17

EJCDC® E-500, Agreement Between Owner and Engineer for Professional Services.
Copyright © 2014 National Society of Professional Engineers, American Council of Engineering Companies, and American Society of Civil Engineers. All rights reserved.

AGREEMENT
BETWEEN OWNER AND ENGINEER
FOR PROFESSIONAL SERVICES

THIS IS AN AGREEMENT effective as of July 6, 2018 ("Effective Date") between

the City of Hattiesburg ("Owner") and

Shows, Dearman and Waits, Inc. ("Engineer").

Owner's Project, of which Engineer's services under this Agreement are a part, is generally identified as follows:

The construction of improvements to the city owned water system in the area containing Ridgeway Lane, Evergreen Lane, Pineview Drive, Woodhaven Drive, 1st Terrace, 2nd Terrace, 3rd Terrace, Shadow Wood Drive, and Huckleberry Lane. The improvements will consist of updating existing infrastructure. ("Project").

Other terms used in this Agreement are defined in Article 7.

Engineer's services under this Agreement are generally identified as follows: See Exhibit A

Owner and Engineer further agree as follows:

ARTICLE 1 – SERVICES OF ENGINEER

1.01 *Scope*

A. Engineer shall provide, or cause to be provided, the services set forth herein and in Exhibit A.

ARTICLE 2 – OWNER'S RESPONSIBILITIES

2.01 *General*

A. Owner shall have the responsibilities set forth herein and in Exhibit B.

B. Owner shall pay Engineer as set forth in Article 4 and Exhibit C.

C. Owner shall be responsible for all requirements and instructions that it furnishes to Engineer pursuant to this Agreement, and for the accuracy and completeness of all programs, reports, data, and other information furnished by Owner to Engineer pursuant to this Agreement. Engineer may use and rely upon such requirements, programs, instructions, reports, data, and information in performing or furnishing services under this Agreement, subject to any express limitations or reservations applicable to the furnished items.

D. Owner shall give prompt written notice to Engineer whenever Owner observes or otherwise becomes aware of:

1. any development that affects the scope or time of performance of Engineer's services;

Copyright © 2014 National Society of Professional Engineers, American Council of Engineering Companies, and American Society of Civil Engineers. All rights reserved.

2. the presence at the Site of any Constituent of Concern; or

3. any relevant, material defect or nonconformance in: (a) Engineer's services, (b) the Work, (c) the performance of any Constructor, or (d) Owner's performance of its responsibilities under this Agreement.

ARTICLE 3 – SCHEDULE FOR RENDERING SERVICES

3.01 *Commencement*

A. Engineer is authorized to begin rendering services as of the Effective Date.

3.02 *Time for Completion*

A. Engineer shall complete its obligations within a reasonable time. Specific periods of time for rendering services, or specific dates by which services are to be completed, are provided in Exhibit A, and are hereby agreed to be reasonable.

B. If, through no fault of Engineer, such periods of time or dates are changed, or the orderly and continuous progress of Engineer's services is impaired, or Engineer's services are delayed or suspended, then the time for completion of Engineer's services, and the rates and amounts of Engineer's compensation, shall be adjusted equitably.

C. If Owner authorizes changes in the scope, extent, or character of the Project or Engineer's services, then the time for completion of Engineer's services, and the rates and amounts of Engineer's compensation, shall be adjusted equitably.

D. Owner shall make decisions and carry out its other responsibilities in a timely manner so as not to delay the Engineer's performance of its services.

E. If Engineer fails, through its own fault, to complete the performance required in this Agreement within the time set forth, as duly adjusted, then Owner shall be entitled, as its sole remedy, to the recovery of direct damages, if any, resulting from such failure.

ARTICLE 4 – INVOICES AND PAYMENTS

4.01 *Invoices*

A. *Preparation and Submittal of Invoices:* Engineer shall prepare invoices in accordance with its standard invoicing practices and the terms of Exhibit C. Engineer shall submit its invoices to Owner on a monthly basis. Invoices are due and payable within 30 days of receipt.

4.02 *Payments*

A. *Application to Interest and Principal:* Payment will be credited first to any interest owed to Engineer and then to principal.

B. *Failure to Pay*: If Owner fails to make any payment due Engineer for services and expenses within 45 days after receipt of Engineer's invoice, then:

Copyright © 2014 National Society of Professional Engineers, American Council of Engineering Companies, and American Society of Civil Engineers. All rights reserved.

1. amounts due Engineer will be increased at the rate of 1.5% per month (or the maximum rate of interest permitted by law, if less) from said forty-fifth day; and

2. Engineer may, after giving seven days written notice to Owner, suspend services under this Agreement until Owner has paid in full all amounts due for services, expenses, and other related charges. Owner waives any and all claims against Engineer for any such suspension.

C. *Disputed Invoices:* If Owner disputes an invoice, either as to amount or entitlement, then Owner shall promptly advise Engineer in writing of the specific basis for doing so, may withhold only that portion so disputed, and must pay the undisputed portion subject to the terms of Paragraph 4.01.

D. *Sales or Use Taxes:* If after the Effective Date any governmental entity takes a legislative action that imposes additional sales or use taxes on Engineer's services or compensation under this Agreement, then Engineer may invoice such additional sales or use taxes for reimbursement by Owner. Owner shall reimburse Engineer for the cost of such invoiced additional sales or use taxes; such reimbursement shall be in addition to the compensation to which Engineer is entitled under the terms of Exhibit C.

ARTICLE 5 – OPINIONS OF COST

5.01 *Opinions of Probable Construction Cost*

A. Engineer's opinions (if any) of probable Construction Cost are to be made on the basis of Engineer's experience, qualifications, and general familiarity with the construction industry. However, because Engineer has no control over the cost of labor, materials, equipment, or services furnished by others, or over contractors' methods of determining prices, or over competitive bidding or market conditions, Engineer cannot and does not guarantee that proposals, bids, or actual Construction Cost will not vary from opinions of probable Construction Cost prepared by Engineer. If Owner requires greater assurance as to probable Construction Cost, then Owner agrees to obtain an independent cost estimate.

5.02 *Designing to Construction Cost Limit*

A. If a Construction Cost limit is established between Owner and Engineer, such Construction Cost limit and a statement of Engineer's rights and responsibilities with respect thereto will be specifically set forth in Exhibit F to this Agreement.

5.03 *Opinions of Total Project Costs*

A. The services, if any, of Engineer with respect to Total Project Costs shall be limited to assisting the Owner in tabulating the various categories that comprise Total Project Costs. Engineer assumes no responsibility for the accuracy of any opinions of Total Project Costs.

Copyright © 2014 National Society of Professional Engineers, American Council of Engineering Companies, and American Society of Civil Engineers. All rights reserved.

ARTICLE 6 – GENERAL CONSIDERATIONS

6.01 *Standards of Performance*

A. *Standard of Care:* The standard of care for all professional engineering and related services performed or furnished by Engineer under this Agreement will be the care and skill ordinarily used by members of the subject profession practicing under similar circumstances at the same time and in the same locality. Engineer makes no warranties, express or implied, under this Agreement or otherwise, in connection with any services performed or furnished by Engineer.

B. *Technical Accuracy:* Owner shall not be responsible for discovering deficiencies in the technical accuracy of Engineer's services. Engineer shall correct deficiencies in technical accuracy without additional compensation, unless such corrective action is directly attributable to deficiencies in Owner-furnished information.

C. *Consultants:* Engineer may retain such Consultants as Engineer deems necessary to assist in the performance or furnishing of the services, subject to reasonable, timely, and substantive objections by Owner.

D. *Reliance on Others:* Subject to the standard of care set forth in Paragraph 6.01.A, Engineer and its Consultants may use or rely upon design elements and information ordinarily or customarily furnished by others, including, but not limited to, specialty contractors, manufacturers, suppliers, and the publishers of technical standards.

E. *Compliance with Laws and Regulations, and Policies and Procedures:*

1. Engineer and Owner shall comply with applicable Laws and Regulations.

2. Engineer shall comply with any and all policies, procedures, and instructions of Owner that are applicable to Engineer's performance of services under this Agreement and that Owner provides to Engineer in writing, subject to the standard of care set forth in Paragraph 6.01.A, and to the extent compliance is not inconsistent with professional practice requirements.

3. This Agreement is based on Laws and Regulations and Owner-provided written policies and procedures as of the Effective Date. The following may be the basis for modifications to Owner's responsibilities or to Engineer's scope of services, times of performance, or compensation:

   a. changes after the Effective Date to Laws and Regulations;

   b. the receipt by Engineer after the Effective Date of Owner-provided written policies and procedures;

   c. changes after the Effective Date to Owner-provided written policies or procedures.

F. Engineer shall not be required to sign any document, no matter by whom requested, that would result in the Engineer having to certify, guarantee, or warrant the existence of conditions whose existence the Engineer cannot ascertain. Owner agrees not to make

Copyright © 2014 National Society of Professional Engineers, American Council of Engineering Companies, and American Society of Civil Engineers. All rights reserved.

resolution of any dispute with the Engineer or payment of any amount due to the Engineer in any way contingent upon the Engineer signing any such document.

G. The general conditions for any construction contract documents prepared hereunder are to be EJCDC® C-700 "Standard General Conditions of the Construction Contract" (2013 Edition), prepared by the Engineers Joint Contract Documents Committee, unless expressly indicated otherwise in Exhibit J or elsewhere in this Agreement.

H. Engineer shall not at any time supervise, direct, control, or have authority over any Constructor's work, nor shall Engineer have authority over or be responsible for the means, methods, techniques, sequences, or procedures of construction selected or used by any Constructor, or the safety precautions and programs incident thereto, for security or safety at the Site, nor for any failure of a Constructor to comply with Laws and Regulations applicable to that Constructor's furnishing and performing of its work. Engineer shall not be responsible for the acts or omissions of any Constructor.

I. Engineer neither guarantees the performance of any Constructor nor assumes responsibility for any Constructor's, failure to furnish and perform the Work in accordance with the Construction Contract Documents.

J. Engineer shall not be responsible for any decision made regarding the Construction Contract Documents, or any application, interpretation, clarification, or modification of the Construction Contract Documents, other than those made by Engineer or its Consultants.

K. Engineer is not required to provide and does not have any responsibility for surety bonding or insurance-related advice, recommendations, counseling, or research, or enforcement of construction insurance or surety bonding requirements.

L. Engineer's services do not include providing legal advice or representation.

M. Engineer's services do not include (1) serving as a "municipal advisor" for purposes of the registration requirements of Section 975 of the Dodd-Frank Wall Street Reform and Consumer Protection Act (2010) or the municipal advisor registration rules issued by the Securities and Exchange Commission, or (2) advising Owner, or any municipal entity or other person or entity, regarding municipal financial products or the issuance of municipal securities, including advice with respect to the structure, timing, terms, or other similar matters concerning such products or issuances.

N. While at the Site, Engineer, its Consultants, and their employees and representatives shall comply with the applicable requirements of Contractor's and Owner's safety programs of which Engineer has been informed in writing.

6.02 *Design Without Construction Phase Services*

A. Engineer shall be responsible only for those Construction Phase services expressly required of Engineer in Exhibit A, Paragraph A1.05. With the exception of such expressly required services, Engineer shall have no design, Shop Drawing review, or other obligations during construction, and Owner assumes all responsibility for the application and interpretation of the Construction Contract Documents, review and response to

Copyright © 2014 National Society of Professional Engineers, American Council of Engineering Companies, and American Society of Civil Engineers. All rights reserved.

Contractor claims, Construction Contract administration, processing of Change Orders and submittals, revisions to the Construction Contract Documents during construction, construction observation and review, review of Contractor's payment applications, and all other necessary Construction Phase administrative, engineering, and professional services. Owner waives all claims against the Engineer that may be connected in any way to Construction Phase administrative, engineering, or professional services except for those services that are expressly required of Engineer in Exhibit A.

6.03 *Use of Documents*

A. All Documents are instruments of service, and Engineer shall retain an ownership and property interest therein (including the copyright and the right of reuse at the discretion of the Engineer) whether or not the Project is completed.

B. If Engineer is required to prepare or furnish Drawings or Specifications under this Agreement, Engineer shall deliver to Owner at least one original printed record version of such Drawings and Specifications, signed and sealed according to applicable Laws and Regulations.

C. Owner may make and retain copies of Documents for information and reference in connection with the use of the Documents on the Project. Engineer grants Owner a limited license to use the Documents on the Project, extensions of the Project, and for related uses of the Owner, subject to receipt by Engineer of full payment due and owing for all services relating to preparation of the Documents, and subject to the following limitations: (1) Owner acknowledges that such Documents are not intended or represented to be suitable for use on the Project unless completed by Engineer, or for use or reuse by Owner or others on extensions of the Project, on any other project, or for any other use or purpose, without written verification or adaptation by Engineer; (2) any such use or reuse, or any modification of the Documents, without written verification, completion, or adaptation by Engineer, as appropriate for the specific purpose intended, will be at Owner's sole risk and without liability or legal exposure to Engineer or to its officers, directors, members, partners, agents, employees, and Consultants; (3) Owner shall indemnify and hold harmless Engineer and its officers, directors, members, partners, agents, employees, and Consultants from all claims, damages, losses, and expenses, including attorneys' fees, arising out of or resulting from any use, reuse, or modification of the Documents without written verification, completion, or adaptation by Engineer; and (4) such limited license to Owner shall not create any rights in third parties.

D. If Engineer at Owner's request verifies the suitability of the Documents, completes them, or adapts them for extensions of the Project or for any other purpose, then Owner shall compensate Engineer at rates or in an amount to be agreed upon by Owner and Engineer.

6.04 *Electronic Transmittals*

A. Owner and Engineer may transmit, and shall accept, Project-related correspondence, Documents, text, data, drawings, information, and graphics, in electronic media or digital format, either directly, or through access to a secure Project website, in accordance with a mutually agreeable protocol.

Copyright © 2014 National Society of Professional Engineers, American Council of Engineering Companies, and American Society of Civil Engineers. All rights reserved.

B. If this Agreement does not establish protocols for electronic or digital transmittals, then Owner and Engineer shall jointly develop such protocols.

C. When transmitting items in electronic media or digital format, the transmitting party makes no representations as to long term compatibility, usability, or readability of the items resulting from the recipient's use of software application packages, operating systems, or computer hardware differing from those used in the drafting or transmittal of the items, or from those established in applicable transmittal protocols.

6.05 *Insurance*

A. Engineer shall procure and maintain insurance as set forth in Exhibit G. Engineer shall cause Owner to be listed as an additional insured on any applicable general liability insurance policy carried by Engineer.

B. Owner shall procure and maintain insurance as set forth in Exhibit G. Owner shall cause Engineer and its Consultants to be listed as additional insureds on any general liability policies carried by Owner, which are applicable to the Project.

C. Owner shall require Contractor to purchase and maintain policies of insurance covering workers' compensation, general liability, motor vehicle damage and injuries, and other insurance necessary to protect Owner's and Engineer's interests in the Project. Owner shall require Contractor to cause Engineer and its Consultants to be listed as additional insureds with respect to such liability insurance purchased and maintained by Contractor for the Project.

D. Owner and Engineer shall each deliver to the other certificates of insurance evidencing the coverages indicated in Exhibit G. Such certificates shall be furnished prior to commencement of Engineer's services and at renewals thereafter during the life of the Agreement.

E. All policies of property insurance relating to the Project, including but not limited to any builder's risk policy, shall allow for waiver of subrogation rights and contain provisions to the effect that in the event of payment of any loss or damage the insurers will have no rights of recovery against any insured thereunder or against Engineer or its Consultants. Owner and Engineer waive all rights against each other, Contractor, the Consultants, and the respective officers, directors, members, partners, employees, agents, consultants, and subcontractors of each and any of them, for all losses and damages caused by, arising out of, or resulting from any of the perils or causes of loss covered by any builder's risk policy and any other property insurance relating to the Project. Owner and Engineer shall take appropriate measures in other Project-related contracts to secure waivers of rights consistent with those set forth in this paragraph.

F. All policies of insurance shall contain a provision or endorsement that the coverage afforded will not be canceled or reduced in limits by endorsement, and that renewal will not be refused, until at least 10 days prior written notice has been given to the primary insured. Upon receipt of such notice, the receiving party shall promptly forward a copy of the notice to the other party to this Agreement.

Copyright © 2014 National Society of Professional Engineers, American Council of Engineering Companies, and American Society of Civil Engineers. All rights reserved.

G. At any time, Owner may request that Engineer or its Consultants, at Owner's sole expense, provide additional insurance coverage, increased limits, or revised deductibles that are more protective than those specified in Exhibit G. If so requested by Owner, and if commercially available, Engineer shall obtain and shall require its Consultants to obtain such additional insurance coverage, different limits, or revised deductibles for such periods of time as requested by Owner, and Exhibit G will be supplemented to incorporate these requirements.

6.06 *Suspension and Termination*

A. *Suspension:*

1. *By Owner*: Owner may suspend the Project for up to 90 days upon seven days written notice to Engineer.

2. *By Engineer*: Engineer may, after giving seven days written notice to Owner, suspend services under this Agreement if Owner has failed to pay Engineer for invoiced services and expenses, as set forth in Paragraph 4.02.B, or in response to the presence of Constituents of Concern at the Site, as set forth in Paragraph 6.10.D.

B. *Termination*: The obligation to provide further services under this Agreement may be terminated:

1. For cause,

a. by either party upon 30 days written notice in the event of substantial failure by the other party to perform in accordance with the terms hereof through no fault of the terminating party.

b. by Engineer:

1) upon seven days written notice if Owner demands that Engineer furnish or perform services contrary to Engineer's responsibilities as a licensed professional; or

2) upon seven days written notice if the Engineer's services for the Project are delayed or suspended for more than 90 days for reasons beyond Engineer's control, or as the result of the presence at the Site of undisclosed Constituents of Concern, as set forth in Paragraph 6.10.D.

3) Engineer shall have no liability to Owner on account of such termination.

c. Notwithstanding the foregoing, this Agreement will not terminate under Paragraph 6.06.B.1.a if the party receiving such notice begins, within seven days of receipt of such notice, to correct its substantial failure to perform and proceeds diligently to cure such failure within no more than 30 days of receipt thereof; provided, however, that if and to the extent such substantial failure cannot be reasonably cured within such 30 day period, and if such party has diligently attempted to cure the same and thereafter continues diligently to cure the same,

Copyright © 2014 National Society of Professional Engineers, American Council of Engineering Companies, and American Society of Civil Engineers. All rights reserved.

then the cure period provided for herein shall extend up to, but in no case more than, 60 days after the date of receipt of the notice.

2. For convenience, by Owner effective upon Engineer's receipt of notice from Owner.

C. *Effective Date of Termination:* The terminating party under Paragraph 6.06.B may set the effective date of termination at a time up to 30 days later than otherwise provided to allow Engineer to demobilize personnel and equipment from the Site, to complete tasks whose value would otherwise be lost, to prepare notes as to the status of completed and uncompleted tasks, and to assemble Project materials in orderly files.

D. *Payments Upon Termination:*

1. In the event of any termination under Paragraph 6.06, Engineer will be entitled to invoice Owner and to receive full payment for all services performed or furnished in accordance with this Agreement and all Reimbursable Expenses incurred through the effective date of termination. Upon making such payment, Owner shall have the limited right to the use of Documents, at Owner's sole risk, subject to the provisions of Paragraph 6.03.

2. In the event of termination by Owner for convenience or by Engineer for cause, Engineer shall be entitled, in addition to invoicing for those items identified in Paragraph 6.06.D.1, to invoice Owner and receive payment of a reasonable amount for services and expenses directly attributable to termination, both before and after the effective date of termination, such as reassignment of personnel, costs of terminating contracts with Engineer's Consultants, and other related close-out costs, using methods and rates for Additional Services as set forth in Exhibit C.

6.07 *Controlling Law*

A. This Agreement is to be governed by the Laws and Regulations of the state in which the Project is located.

6.08 *Successors, Assigns, and Beneficiaries*

A. Owner and Engineer are hereby bound and the successors, executors, administrators, and legal representatives of Owner and Engineer (and to the extent permitted by Paragraph 6.08.B the assigns of Owner and Engineer) are hereby bound to the other party to this Agreement and to the successors, executors, administrators and legal representatives (and said assigns) of such other party, in respect of all covenants, agreements, and obligations of this Agreement.

B. Neither Owner nor Engineer may assign, sublet, or transfer any rights under or interest (including, but without limitation, money that is due or may become due) in this Agreement without the written consent of the other party, except to the extent that any assignment, subletting, or transfer is mandated by law. Unless specifically stated to the contrary in any written consent to an assignment, no assignment will release or discharge the assignor from any duty or responsibility under this Agreement.

Copyright © 2014 National Society of Professional Engineers, American Council of Engineering Companies, and American Society of Civil Engineers. All rights reserved.

C. Unless expressly provided otherwise in this Agreement:

1. Nothing in this Agreement shall be construed to create, impose, or give rise to any duty owed by Owner or Engineer to any Constructor, other third-party individual or entity, or to any surety for or employee of any of them.

2. All duties and responsibilities undertaken pursuant to this Agreement will be for the sole and exclusive benefit of Owner and Engineer and not for the benefit of any other party.

3. Owner agrees that the substance of the provisions of this Paragraph 6.08.C shall appear in the Construction Contract Documents.

6.09 *Dispute Resolution*

A. Owner and Engineer agree to negotiate all disputes between them in good faith for a period of 30 days from the date of notice prior to invoking the procedures of Exhibit H or other provisions of this Agreement or exercising their rights at law.

B. If the parties fail to resolve a dispute through negotiation under Paragraph 6.09.A, then either or both may invoke the procedures of Exhibit H. If Exhibit H is not included, or if no dispute resolution method is specified in Exhibit H, then the parties may exercise their rights at law.

6.10 *Environmental Condition of Site*

A. Owner represents to Engineer that as of the Effective Date to the best of Owner's knowledge no Constituents of Concern, other than those disclosed in writing to Engineer, exist at or adjacent to the Site.

B. If Engineer encounters or learns of an undisclosed Constituent of Concern at the Site, then Engineer shall notify (1) Owner and (2) appropriate governmental officials if Engineer reasonably concludes that doing so is required by applicable Laws or Regulations.

C. It is acknowledged by both parties that Engineer's scope of services does not include any services related to unknown or undisclosed Constituents of Concern. If Engineer or any other party encounters, uncovers, or reveals an undisclosed Constituent of Concern, then Owner shall promptly determine whether to retain a qualified expert to evaluate such condition or take any necessary corrective action.

D. If investigative or remedial action, or other professional services, are necessary with respect to undisclosed Constituents of Concern, or if investigative or remedial action beyond that reasonably contemplated is needed to address a disclosed or known Constituent of Concern, then Engineer may, at its option and without liability for consequential or any other damages, suspend performance of services on the portion of the Project affected thereby until such portion of the Project is no longer affected.

E. If the presence at the Site of undisclosed Constituents of Concern adversely affects the performance of Engineer's services under this Agreement, then the Engineer shall have the option of (1) accepting an equitable adjustment in its compensation or in the time of completion, or both; or (2) terminating this Agreement for cause on seven-day notice.

Copyright © 2014 National Society of Professional Engineers, American Council of Engineering Companies, and American Society of Civil Engineers. All rights reserved.

F. Owner acknowledges that Engineer is performing professional services for Owner and that Engineer is not and shall not be required to become an "owner," "arranger," "operator," "generator," or "transporter" of hazardous substances, as defined in the Comprehensive Environmental Response, Compensation, and Liability Act (CERCLA), as amended, which are or may be encountered at or near the Site in connection with Engineer's activities under this Agreement.

6.11 *Indemnification and Mutual Waiver*

A. *Indemnification by Engineer:* To the fullest extent permitted by Laws and Regulations, Engineer shall indemnify and hold harmless Owner, and Owner's officers, directors, members, partners, agents, consultants, and employees, from losses, damages, and judgments (including reasonable consultants' and attorneys' fees and expenses) arising from third-party claims or actions relating to the Project, provided that any such claim, action, loss, damages, or judgment is attributable to bodily injury, sickness, disease, or death, or to injury to or destruction of tangible property (other than the Work itself), including the loss of use resulting therefrom, but only to the extent caused by any negligent act or omission of Engineer or Engineer's officers, directors, members, partners, agents, employees, or Consultants. **This indemnification provision is subject to and limited by the provisions, if any, agreed to by Owner and Engineer in Exhibit I, "Limitations of Liability."**

B. *Indemnification by Owner:* Owner shall indemnify and hold harmless Engineer and its officers, directors, members, partners, agents, employees, and Consultants as required by Laws and Regulations **and to the extent (if any) required in Exhibit I, "Limitations of Liability."**

C. *Environmental Indemnification:* To the fullest extent permitted by Laws and Regulations, Owner shall indemnify and hold harmless Engineer and its officers, directors, members, partners, agents, employees, and Consultants from all claims, costs, losses, damages, actions, and judgments (including reasonable consultants' and attorney's fees and expenses) caused by, arising out of, relating to, or resulting from a Constituent of Concern at, on, or under the Site, provided that (1) any such claim, cost, loss, damages, action, or judgment is attributable to bodily injury, sickness, disease, or death, or to injury to or destruction of tangible property (other than the Work itself), including the loss of use resulting therefrom, and (2) nothing in this paragraph shall obligate Owner to indemnify any individual or entity from and against the consequences of that individual's or entity's own negligence or willful misconduct.

D. *No Defense Obligation:* The indemnification commitments in this Agreement do not include a defense obligation by the indemnitor unless such obligation is expressly stated.

E. *Percentage Share of Negligence:* To the fullest extent permitted by Laws and Regulations, a party's total liability to the other party and anyone claiming by, through, or under the other party for any cost, loss, or damages caused in part by the negligence of the party and in part by the negligence of the other party or any other negligent entity or individual, shall not exceed the percentage share that the party's negligence bears to the total negligence of Owner, Engineer, and all other negligent entities and individuals.

Copyright © 2014 National Society of Professional Engineers, American Council of Engineering Companies, and American Society of Civil Engineers. All rights reserved.

F. *Mutual Waiver:* To the fullest extent permitted by Laws and Regulations, Owner and Engineer waive against each other, and the other's employees, officers, directors, members, agents, insurers, partners, and consultants, any and all claims for or entitlement to special, incidental, indirect, or consequential damages arising out of, resulting from, or in any way related to this Agreement or the Project, from any cause or causes.

6.12 *Records Retention*

A. Engineer shall maintain on file in legible form, for a period of five years following completion or termination of its services, all Documents, records (including cost records), and design calculations related to Engineer's services or pertinent to Engineer's performance under this Agreement. Upon Owner's request, Engineer shall provide a copy of any such item to Owner at cost.

6.13 *Miscellaneous Provisions*

A. *Notices:* Any notice required under this Agreement will be in writing, addressed to the appropriate party at its address on the signature page and given personally, by registered or certified mail postage prepaid, or by a commercial courier service. All notices shall be effective upon the date of receipt.

B. *Survival:* All express representations, waivers, indemnifications, and limitations of liability included in this Agreement will survive its completion or termination for any reason.

C. *Severability:* Any provision or part of the Agreement held to be void or unenforceable under any Laws or Regulations shall be deemed stricken, and all remaining provisions shall continue to be valid and binding upon Owner and Engineer, which agree that the Agreement shall be reformed to replace such stricken provision or part thereof with a valid and enforceable provision that comes as close as possible to expressing the intention of the stricken provision.

D. *Waiver:* A party's non-enforcement of any provision shall not constitute a waiver of that provision, nor shall it affect the enforceability of that provision or of the remainder of this Agreement.

E. *Accrual of Claims:* To the fullest extent permitted by Laws and Regulations, all causes of action arising under this Agreement shall be deemed to have accrued, and all statutory periods of limitation shall commence, no later than the date of Substantial Completion.

ARTICLE 7 – DEFINITIONS

7.01 *Defined Terms*

A. Wherever used in this Agreement (including the Exhibits hereto) terms (including the singular and plural forms) printed with initial capital letters have the meanings indicated in the text above, in the exhibits, or in the following definitions:

1. *Addenda*—Written or graphic instruments issued prior to the opening of bids which clarify, correct, or change the bidding requirements or the proposed Construction Contract Documents.

Copyright © 2014 National Society of Professional Engineers, American Council of Engineering Companies, and American Society of Civil Engineers. All rights reserved.

2. *Additional Services*—The services to be performed for or furnished to Owner by Engineer in accordance with Part 2 of Exhibit A of this Agreement.

3. *Agreement*—This written contract for professional services between Owner and Engineer, including all exhibits identified in Paragraph 8.01 and any duly executed amendments.

4. *Application for Payment*—The form acceptable to Engineer which is to be used by Contractor during the course of the Work in requesting progress or final payments and which is to be accompanied by such supporting documentation as is required by the Construction Contract.

5. *Basic Services*—The services to be performed for or furnished to Owner by Engineer in accordance with Part 1 of Exhibit A of this Agreement.

6. *Change Order*—A document which is signed by Contractor and Owner and authorizes an addition, deletion, or revision in the Work or an adjustment in the Construction Contract Price or the Construction Contract Times, or other revision to the Construction Contract, issued on or after the effective date of the Construction Contract.

7. *Change Proposal*—A written request by Contractor, duly submitted in compliance with the procedural requirements set forth in the Construction Contract, seeking an adjustment in Construction Contract Price or Construction Contract Times, or both; contesting an initial decision by Engineer concerning the requirements of the Construction Contract Documents or the acceptability of Work under the Construction Contract Documents; challenging a set-off against payments due; or seeking other relief with respect to the terms of the Construction Contract.

8. *Constituent of Concern*—Asbestos, petroleum, radioactive material, polychlorinated biphenyls (PCBs), hazardous waste, and any substance, product, waste, or other material of any nature whatsoever that is or becomes listed, regulated, or addressed pursuant to (a) the Comprehensive Environmental Response, Compensation and Liability Act, 42 U.S.C. §§9601 et seq. ("CERCLA"); (b) the Hazardous Materials Transportation Act, 49 U.S.C. §§5501 et seq.; (c) the Resource Conservation and Recovery Act, 42 U.S.C. §§6901 et seq. ("RCRA"); (d) the Toxic Substances Control Act, 15 U.S.C. §§2601 et seq.; (e) the Clean Water Act, 33 U.S.C. §§1251 et seq.; (f) the Clean Air Act, 42 U.S.C. §§7401 et seq.; or (g) any other federal, State, or local statute, law, rule, regulation, ordinance, resolution, code, order, or decree regulating, relating to, or imposing liability or standards of conduct concerning, any hazardous, toxic, or dangerous waste, substance, or material.

9. *Construction Contract*—The entire and integrated written contract between the Owner and Contractor concerning the Work.

10. *Construction Contract Documents*—Those items designated as "Contract Documents" in the Construction Contract, and which together comprise the Construction Contract.

11. *Construction Contract Price*—The money that Owner has agreed to pay Contractor for completion of the Work in accordance with the Construction Contract Documents.

Copyright © 2014 National Society of Professional Engineers, American Council of Engineering Companies, and American Society of Civil Engineers. All rights reserved.

12. *Construction Contract Times*—The number of days or the dates by which Contractor shall: (a) achieve milestones, if any, in the Construction Contract; (b) achieve Substantial Completion; and (c) complete the Work.

13. *Construction Cost*—The cost to Owner of the construction of those portions of the entire Project designed or specified by or for Engineer under this Agreement, including construction labor, services, materials, equipment, insurance, and bonding costs, and allowances for contingencies. Construction Cost does not include costs of services of Engineer or other design professionals and consultants; cost of land or rights-of-way, or compensation for damages to property; Owner's costs for legal, accounting, insurance counseling, or auditing services; interest or financing charges incurred in connection with the Project; or the cost of other services to be provided by others to Owner. Construction Cost is one of the items comprising Total Project Costs.

14. *Constructor*—Any person or entity (not including the Engineer, its employees, agents, representatives, and Consultants), performing or supporting construction activities relating to the Project, including but not limited to Contractors, Subcontractors, Suppliers, Owner's work forces, utility companies, other contractors, construction managers, testing firms, shippers, and truckers, and the employees, agents, and representatives of any or all of them.

15. *Consultants*—Individuals or entities having a contract with Engineer to furnish services with respect to this Project as Engineer's independent professional associates and consultants; subcontractors; or vendors.

16. *Contractor*—The entity or individual with which Owner enters into a Construction Contract.

17. *Documents*—Data, reports, Drawings, Specifications, Record Drawings, building information models, civil integrated management models, and other deliverables, whether in printed or electronic format, provided or furnished in appropriate phases by Engineer to Owner pursuant to this Agreement.

18. *Drawings*—That part of the Construction Contract Documents that graphically shows the scope, extent, and character of the Work to be performed by Contractor.

19. *Effective Date*—The date indicated in this Agreement on which it becomes effective, but if no such date is indicated, the date on which this Agreement is signed and delivered by the last of the parties to sign and deliver.

20. *Engineer*—The individual or entity named as such in this Agreement.

21. *Field Order*—A written order issued by Engineer which requires minor changes in the Work but does not change the Construction Contract Price or the Construction Contract Times.

22. *Laws and Regulations; Laws or Regulations*—Any and all applicable laws, statutes, rules, regulations, ordinances, codes, and orders of any and all governmental bodies, agencies, authorities, and courts having jurisdiction.

Copyright © 2014 National Society of Professional Engineers, American Council of Engineering Companies, and American Society of Civil Engineers. All rights reserved.

23. *Owner*—The individual or entity named as such in this Agreement and for which Engineer's services are to be performed. Unless indicated otherwise, this is the same individual or entity that will enter into any Construction Contracts concerning the Project.

24. *Project*—The total undertaking to be accomplished for Owner by engineers, contractors, and others, including planning, study, design, construction, testing, commissioning, and start-up, and of which the services to be performed or furnished by Engineer under this Agreement are a part.

25. *Record Drawings*—Drawings depicting the completed Project, or a specific portion of the completed Project, prepared by Engineer as an Additional Service and based on Contractor's record copy of all Drawings, Specifications, Addenda, Change Orders, Work Change Directives, Field Orders, and written interpretations and clarifications, as delivered to Engineer and annotated by Contractor to show changes made during construction.

26. *Reimbursable Expenses*—The expenses incurred directly by Engineer in connection with the performing or furnishing of Basic Services and Additional Services for the Project.

27. *Resident Project Representative*—The authorized representative of Engineer assigned to assist Engineer at the Site during the Construction Phase. As used herein, the term Resident Project Representative or "RPR" includes any assistants or field staff of Resident Project Representative. The duties and responsibilities of the Resident Project Representative, if any, are as set forth in Exhibit D.

28. *Samples*—Physical examples of materials, equipment, or workmanship that are representative of some portion of the Work and that establish the standards by which such portion of the Work will be judged.

29. *Shop Drawings*—All drawings, diagrams, illustrations, schedules, and other data or information that are specifically prepared or assembled by or for Contractor and submitted by Contractor to illustrate some portion of the Work. Shop Drawings, whether approved or not, are not Drawings and are not Construction Contract Documents.

30. *Site*—Lands or areas to be indicated in the Construction Contract Documents as being furnished by Owner upon which the Work is to be performed, including rights-of-way and easements, and such other lands furnished by Owner which are designated for the use of Contractor.

31. *Specifications*—The part of the Construction Contract Documents that consists of written requirements for materials, equipment, systems, standards, and workmanship as applied to the Work, and certain administrative requirements and procedural matters applicable to the Work.

32. *Subcontractor*—An individual or entity having a direct contract with Contractor or with any other Subcontractor for the performance of a part of the Work.

33. *Substantial Completion*—The time at which the Work (or a specified part thereof) has progressed to the point where, in the opinion of Engineer, the Work (or a specified part

Copyright © 2014 National Society of Professional Engineers, American Council of Engineering Companies, and American Society of Civil Engineers. All rights reserved.

thereof) is sufficiently complete, in accordance with the Construction Contract Documents, so that the Work (or a specified part thereof) can be utilized for the purposes for which it is intended. The terms "substantially complete" and "substantially completed" as applied to all or part of the Work refer to Substantial Completion thereof.

34. *Supplier*—A manufacturer, fabricator, supplier, distributor, materialman, or vendor having a direct contract with Contractor or with any Subcontractor to furnish materials or equipment to be incorporated in the Work by Contractor or a Subcontractor.

35. *Total Project Costs*—The total cost of planning, studying, designing, constructing, testing, commissioning, and start-up of the Project, including Construction Cost and all other Project labor, services, materials, equipment, insurance, and bonding costs, allowances for contingencies, and the total costs of services of Engineer or other design professionals and consultants, together with such other Project-related costs that Owner furnishes for inclusion, including but not limited to cost of land, rights-of-way, compensation for damages to properties, Owner's costs for legal, accounting, insurance counseling, and auditing services, interest and financing charges incurred in connection with the Project, and the cost of other services to be provided by others to Owner.

36. *Work*—The entire construction or the various separately identifiable parts thereof required to be provided under the Construction Contract Documents. Work includes and is the result of performing or providing all labor, services, and documentation necessary to produce such construction; furnishing, installing, and incorporating all materials and equipment into such construction; and may include related services such as testing, start-up, and commissioning, all as required by the Construction Contract Documents.

37. *Work Change Directive*—A written directive to Contractor issued on or after the effective date of the Construction Contract, signed by Owner and recommended by Engineer, ordering an addition, deletion, or revision in the Work.

B. *Day*:

1. The word "day" means a calendar day of 24 hours measured from midnight to the next midnight.

ARTICLE 8 – EXHIBITS AND SPECIAL PROVISIONS

8.01 *Exhibits Included:*

A. Exhibit A, Engineer's Services.

B. Exhibit B, Owner's Responsibilities.

C. Exhibit C, Payments to Engineer for Services and Reimbursable Expenses.

D. Exhibit D, Duties, Responsibilities and Limitations of Authority of Resident Project Representative.

E. Exhibit E, DELETED

Copyright © 2014 National Society of Professional Engineers, American Council of Engineering Companies, and American Society of Civil Engineers. All rights reserved.

F. Exhibit F, DELETED

G. Exhibit G, Insurance.

H. Exhibit H, DELETED

I. Exhibit I, Limitations of Liability.

J. Exhibit J, DELETED

K. Exhibit K, DELETED

8.02 *Total Agreement*

A. This Agreement, (together with the exhibits included above) constitutes the entire agreement between Owner and Engineer and supersedes all prior written or oral understandings. This Agreement may only be amended, supplemented, modified, or canceled by a written instrument duly executed by both parties.

8.03 *Designated Representatives*

A. With the execution of this Agreement, Engineer and Owner shall designate specific individuals to act as Engineer's and Owner's representatives with respect to the services to be performed or furnished by Engineer and responsibilities of Owner under this Agreement. Such an individual shall have authority to transmit instructions, receive information, and render decisions relative to this Agreement on behalf of the respective party whom the individual represents.

8.04 *Engineer's Certifications*

A. Engineer certifies that it has not engaged in corrupt, fraudulent, or coercive practices in competing for or in executing the Agreement. For the purposes of this Paragraph 8.04:

1. "corrupt practice" means the offering, giving, receiving, or soliciting of any thing of value likely to influence the action of a public official in the selection process or in the Agreement execution;

2. "fraudulent practice" means an intentional misrepresentation of facts made (a) to influence the selection process or the execution of the Agreement to the detriment of Owner, or (b) to deprive Owner of the benefits of free and open competition;

3. "coercive practice" means harming or threatening to harm, directly or indirectly, persons or their property to influence their participation in the selection process or affect the execution of the Agreement.

Copyright © 2014 National Society of Professional Engineers, American Council of Engineering Companies, and American Society of Civil Engineers. All rights reserved.

IN WITNESS WHEREOF, the parties hereto have executed this Agreement, the Effective Date of which is indicated on page 1.

Owner: **The City of Hattiesburg**

By:

Print name: **Toby Barker**
Title: Mayor
Date Signed: 8-7-18

Address for Owner's receipt of notices:
P.O. Box 1898
Hattiesburg, MS 39403-1898

Designated Representative (Paragraph 8.03.A):
Lamar Rutland, P.E.
Title: Director of Engineering
Phone Number: 601-545-4540
E-Mail Address: lrutland@hattiesburgms.com

Engineer: **Shows, Dearman and Waits, Inc.**

By:

Print name: **Shea McNease, P.E.**
Title: President
Date Signed:

Engineer License or Firm's Certificate No. (if required):
E-004
State of: Mississippi

Address for Engineer's receipt of notices:
301 Second Avenue
Hattiesburg, MS 39401

Designated Representative (Paragraph 8.03.A):
Shea E. McNease, P.E.
Title: President
Phone Number: 601-544-1821
E-Mail Address: shea@sd-w.com

Copyright © 2014 National Society of Professional Engineers, American Council of Engineering Companies, and American Society of Civil Engineers. All rights reserved.

This is **EXHIBIT A**, consisting of **14** pages, referred to in and part of the **Agreement between Owner and Engineer for Professional Services** dated _____.

Engineer's Services

Article 1 of the Agreement is supplemented to include the following agreement of the parties.

Engineer shall provide Basic and Additional Services as set forth below.

PART 1 – BASIC SERVICES

A1.01 *Study and Report Phase* - ***SECTION DELETED***

A1.02 *Preliminary Design Phase*

A. After issuance by Owner of any instructions of for use of Project Strategies, Technologies, and Techniques, or for inclusion of sustainable features in the design; and indication by Owner of any specific modifications or changes in the scope, extent, character, or design requirements of the Project desired by Owner, (1) Engineer and Owner shall discuss and resolve any necessary revisions to Engineer's compensation (through application of the provisions regarding Additional Services, or otherwise), or the time for completion of Engineer's services, resulting from the selected solution, related Project Strategies, Technologies, or Techniques, sustainable design instructions, or specific modifications to the Project, and (2) upon written from Owner, Engineer shall:

1. Prepare Preliminary Design Phase documents consisting of final design criteria, preliminary drawings, outline specifications, and written descriptions of the Project.

2. In preparing the Preliminary Design Phase documents, use any specific applicable Project Strategies, Technologies, and Techniques authorized by Owner and include sustainable features, as appropriate, pursuant to Owner's instructions.

3. Provide necessary field surveys and topographic and utility mapping for Engineer's design purposes. Comply with the scope of work and procedure for the identification and mapping of existing utilities selected and authorized by Owner pursuant to advice from Engineer based on ASCE 38, "Standard Guideline for the Collection and Depiction of Existing Subsurface Utility Data," as set forth in Paragraph A1.01.A.12 above. If no such scope of work and procedure for utility mapping has been selected and authorized, then at a minimum the utility mapping will include Engineer contacting utility owners and obtaining available information.

4. Visit the Site as needed to prepare the Preliminary Design Phase documents.

5. Advise Owner if additional reports, data, information, or services of the types described in Exhibit B are necessary and assist Owner in obtaining such reports, data, information, or services.

6. Continue to assist Owner with Project Strategies, Technologies, and Techniques that Owner has chosen to implement.

Copyright © 2014 National Society of Professional Engineers, American Council of Engineering Companies, and American Society of Civil Engineers. All rights reserved.

7. Based on the information contained in the Preliminary Design Phase documents, prepare a revised opinion of probable Construction Cost, and assist Owner in tabulating the various cost categories which comprise Total Project Costs.

8. Obtain and review Owner's instructions regarding Owner's procurement of construction services (including instructions regarding advertisements for bids, instructions to bidders, and requests for proposals, as applicable), Owner's construction contract practices and requirements, insurance and bonding requirements, electronic transmittals during construction, and other information necessary for the finalization of Owner's bidding-related documents (or requests for proposals or other construction procurement documents), and Construction Contract Documents. Also obtain and review copies of Owner's design and construction standards, Owner's standard forms, general conditions (if other than EJCDC® C-700, Standard General Conditions of the Construction Contract, 2013 Edition), supplementary conditions, text, and related documents or content for Engineer to include in the draft bidding-related documents (or requests for proposals or other construction procurement documents), and in the draft Construction Contract Documents, when applicable.

9. Perform or provide the following other Preliminary Design Phase tasks or deliverables: N/A

10. Furnish 1 review copies of the Preliminary Design Phase documents, opinion of probable Construction Cost, and any other Preliminary Design Phase deliverables to Owner within 120 days of authorization to proceed with this phase, and review them with Owner. Within 15 days of receipt, Owner shall submit to Engineer any comments regarding the furnished items.

11. Revise the Preliminary Design Phase documents, opinion of probable Construction Cost, and any other Preliminary Design Phase deliverables in response to Owner's comments, as appropriate, and furnish to Owner 1 copies of the revised Preliminary Design Phase documents, revised opinion of probable Construction Cost, and any other deliverables within 60 days after receipt of Owner's comments.

B. Engineer's services under the Preliminary Design Phase will be considered complete on the date when Engineer has delivered to Owner the revised Preliminary Design Phase documents, revised opinion of probable Construction Cost, and any other Preliminary Design Phase deliverables.

A1.03 *Final Design Phase*

A. After acceptance by Owner of the Preliminary Design Phase documents, revised opinion of probable Construction Cost as determined in the Preliminary Design Phase, and any other Preliminary Design Phase deliverables, subject to any Owner-directed modifications or changes in the scope, extent, character, or design requirements of or for the Project, and upon authorization from Owner, Engineer shall:

1. Prepare final Drawings and Specifications indicating the scope, extent, and character of the Work to be performed and furnished by Contractor.

2. Visit the Site as needed to assist in preparing the final Drawings and Specifications.

Copyright © 2014 National Society of Professional Engineers, American Council of Engineering Companies, and American Society of Civil Engineers. All rights reserved.

3. Provide technical criteria, written descriptions, and design data for Owner's use in filing applications for permits from or approvals of governmental authorities having jurisdiction to review or approve the final design; assist Owner in consultations with such authorities; and revise the Drawings and Specifications in response to directives from such authorities, as appropriate.

4. Advise Owner of any recommended adjustments to the opinion of probable Construction Cost.

5. After consultation with Owner, include in the Construction Contract Documents any specific protocols for the transmittal of Project-related correspondence, documents, text, data, drawings, information, and graphics, in electronic media or digital format, either directly, or through access to a secure Project website. Any such protocols shall be applicable to transmittals between and among Owner, Engineer, and Contractor during the Construction Phase and Post-Construction Phase, and unless agreed otherwise shall supersede any conflicting protocols previously established for transmittals between Owner and Engineer.

6. Assist Owner in assembling known reports and drawings of Site conditions, and in identifying the technical data contained in such reports and drawings upon which bidders or other prospective contractors may rely.

7. In addition to preparing the final Drawings and Specifications, assemble drafts of other Construction Contract Documents based on specific instructions and contract forms, text, or content received from Owner.

8. Prepare or assemble draft bidding-related documents (or requests for proposals or other construction procurement documents), based on the specific bidding or procurement-related instructions and forms, text, or content received from Owner.

9. Perform or provide the following other Final Design Phase tasks or deliverables: N/A

10. Furnish for review by Owner, its legal counsel, and other advisors, 1 copies of the final Drawings and Specifications, assembled drafts of other Construction Contract Documents, the draft bidding-related documents (or requests for proposals or other construction procurement documents), and any other Final Design Phase deliverables, within 120 days of authorization to proceed with the Final Design Phase, and review them with Owner. Within 15 days of receipt, Owner shall submit to Engineer any comments regarding the furnished items, and any instructions for revisions.

11. Revise the final Drawings and Specifications, assembled drafts of other Construction Contract Documents, the draft bidding-related documents (or requests for proposals or other construction procurement documents), and any other Final Design Phase deliverables in accordance with comments and instructions from the Owner, as appropriate, and submit 1 final copies of such documents to Owner within 60 days after receipt of Owner's comments and instructions.

B. Engineer's services under the Final Design Phase will be considered complete on the date when Engineer has delivered to Owner the final Drawings and Specifications, other

Copyright © 2014 National Society of Professional Engineers, American Council of Engineering Companies, and American Society of Civil Engineers. All rights reserved.

assembled Construction Contract Documents, bidding-related documents (or requests for proposals or other construction procurement documents), and any other Final Design Phase deliverables.

C. In the event that the Work designed or specified by Engineer is to be performed or furnished under more than one prime contract, or if Engineer's services are to be separately sequenced with the work of one or more prime Contractors (such as in the case of fast-tracking), Owner and Engineer shall, prior to commencement of the Final Design Phase, develop a schedule for performance of Engineer's services during the Final Design, Bidding or Negotiating, Construction, and Post-Construction Phases in order to sequence and coordinate properly such services as are applicable to the work under such separate prime contracts. This schedule is to be prepared and included in or become an amendment to Exhibit A whether or not the work under such contracts is to proceed concurrently.

D. The number of prime contracts for Work designed or specified by Engineer upon which the Engineer's compensation has been established under this Agreement is one (1). If more prime contracts are awarded, Engineer shall be entitled to an equitable increase in its compensation under this Agreement.

A1.04 *Bidding or Negotiating Phase*

A. After acceptance by Owner of the final Drawings and Specifications, other Construction Contract Documents, bidding-related documents (or requests for proposals or other construction procurement documents), and the most recent opinion of probable Construction Cost as determined in the Final Design Phase, and upon written authorization by Owner to proceed, Engineer shall:

1. Assist Owner in advertising for and obtaining bids or proposals for the Work, assist Owner in issuing assembled design, contract, and bidding-related documents (or requests for proposals or other construction procurement documents) to prospective contractors, and, where applicable, maintain a record of prospective contractors to which documents have been issued, attend pre-bid conferences, if any, and receive and process contractor deposits or charges for the issued documents.

2. Prepare and issue Addenda as appropriate to clarify, correct, or change the issued documents.

3. Provide information or assistance needed by Owner in the course of any review of proposals or negotiations with prospective contractors.

4. Consult with Owner as to the qualifications of prospective contractors.

5. Consult with Owner as to the qualifications of subcontractors, suppliers, and other individuals and entities proposed by prospective contractors, for those portions of the Work as to which review of qualifications is required by the issued documents.

6. If the issued documents require, the Engineer shall evaluate and determine the acceptability of "or equals" and substitute materials and equipment proposed by prospective contractors, provided that such proposals are allowed by the bidding-related documents (or requests for proposals or other construction procurement

Copyright © 2014 National Society of Professional Engineers, American Council of Engineering Companies, and American Society of Civil Engineers. All rights reserved.

documents) prior to award of contracts for the Work. Services under this paragraph are subject to the provisions of Paragraph A2.02.A.2 of this Exhibit A.

7. Attend the bid opening, prepare bid tabulation sheets to meet Owner's schedule, and assist Owner in evaluating bids or proposals, assembling final contracts for the Work for execution by Owner and Contractor, and in issuing notices of award of such contracts.

8. If Owner engages in negotiations with bidders or proposers, assist Owner with respect to technical and engineering issues that arise during the negotiations.

9. Perform or provide the following other Bidding or Negotiating Phase tasks or deliverables: N/A

B. The Bidding or Negotiating Phase will be considered complete upon commencement of the Construction Phase or upon cessation of negotiations with prospective contractors (except as may be required if Exhibit F is a part of this Agreement).

A1.05 *Construction Phase*

A. Upon successful completion of the Bidding and Negotiating Phase, and upon written authorization from Owner, Engineer shall:

1. *General Administration of Construction Contract:* Consult with Owner and act as Owner's representative as provided in the Construction Contract. The extent and limitations of the duties, responsibilities, and authority of Engineer shall be as assigned in EJCDC® C-700, Standard General Conditions of the Construction Contract (2013 Edition), prepared by the Engineers Joint Contract Documents Committee, or other construction general conditions specified in this Agreement. If Owner, or Owner and Contractor, modify the duties, responsibilities, and authority of Engineer in the Construction Contract, or modify other terms of the Construction Contract having a direct bearing on Engineer, then Owner shall compensate Engineer for any related increases in the cost to provide Construction Phase services. Engineer shall not be required to furnish or perform services contrary to Engineer's responsibilities as a licensed professional. All of Owner's instructions to Contractor will be issued through Engineer, which shall have authority to act on behalf of Owner in dealings with Contractor to the extent provided in this Agreement and the Construction Contract except as otherwise provided in writing.

2. *Resident Project Representative (RPR):* Provide the services of an RPR at the Site to assist the Engineer and to provide more extensive observation of Contractor's work. Duties, responsibilities, and authority of the RPR are as set forth in Exhibit D. The furnishing of such RPR's services will not limit, extend, or modify Engineer's responsibilities or authority except as expressly set forth in Exhibit D.

3. *Selection of Independent Testing Laboratory:* Assist Owner in the selection of an independent testing laboratory to perform the services identified in Exhibit B, Paragraph B2.01.

4. *Pre-Construction Conference:* Participate in a pre-construction conference prior to commencement of Work at the Site.

Copyright © 2014 National Society of Professional Engineers, American Council of Engineering Companies, and American Society of Civil Engineers. All rights reserved.

5. *Electronic Transmittal Protocols:* If the Construction Contract Documents do not specify protocols for the transmittal of Project-related correspondence, documents, text, data, drawings, information, and graphics, in electronic media or digital format, either directly, or through access to a secure Project website, then together with Owner and Contractor jointly develop such protocols for transmittals between and among Owner, Contractor, and Engineer during the Construction Phase and Post-Construction Phase.

6. *Original Documents:* If requested by Owner to do so, maintain and safeguard during the Construction Phase at least one original printed record version of the Construction Contract Documents, including Drawings and Specifications signed and sealed by Engineer and other design professionals in accordance with applicable Laws and Regulations. Throughout the Construction Phase, make such original printed record version of the Construction Contract Documents available to Contractor and Owner for review.

7. *Schedules:* Receive, review, and determine the acceptability of any and all schedules that Contractor is required to submit to Engineer, including the Progress Schedule, Schedule of Submittals, and Schedule of Values.

8. *Baselines and Benchmarks:* As appropriate, establish baselines and benchmarks for locating the Work which in Engineer's judgment are necessary to enable Contractor to proceed.

9. *Visits to Site and Observation of Construction:* In connection with observations of Contractor's Work while it is in progress:

    a. Make visits to the Site at intervals appropriate to the various stages of construction, as Engineer deems necessary, to observe as an experienced and qualified design professional the progress of Contractor's executed Work. Such visits and observations by Engineer, and the Resident Project Representative, if any, are not intended to be exhaustive or to extend to every aspect of the Work or to involve detailed inspections of the Work beyond the responsibilities specifically assigned to Engineer in this Agreement and the Construction Contract Documents, but rather are to be limited to spot checking, selective sampling, and similar methods of general observation of the Work based on Engineer's exercise of professional judgment, as assisted by the Resident Project Representative, if any. Based on information obtained during such visits and observations, Engineer will determine in general if the Work is proceeding in accordance with the Construction Contract Documents, and Engineer shall keep Owner informed of the progress of the Work.

    b. The purpose of Engineer's visits to the Site, and representation by the Resident Project Representative, if any, at the Site, will be to enable Engineer to better carry out the duties and responsibilities assigned to and undertaken by Engineer during the Construction Phase, and, in addition, by the exercise of Engineer's efforts as an experienced and qualified design professional, to provide for Owner a greater degree of confidence that the completed Work will conform in general to the Construction Contract Documents and that Contractor has implemented and maintained the integrity of the design concept of the completed Project as a functioning whole as indicated in the Construction Contract Documents. Engineer shall not, during such visits or as a result of such observations of the Work,

Copyright © 2014 National Society of Professional Engineers, American Council of Engineering Companies, and American Society of Civil Engineers. All rights reserved.

supervise, direct, or have control over the Work, nor shall Engineer have authority over or responsibility for the means, methods, techniques, sequences, or procedures of construction selected or used by any Constructor, for security or safety at the Site, for safety precautions and programs incident to any Constructor's work in progress, for the coordination of the Constructors' work or schedules, nor for any failure of any Constructor to comply with Laws and Regulations applicable to furnishing and performing of its work. Accordingly, Engineer neither guarantees the performance of any Constructor nor assumes responsibility for any Constructor's failure to furnish or perform the Work, or any portion of the Work, in accordance with the Construction Contract Documents.

10. *Defective Work:* Reject Work if, on the basis of Engineer's observations, Engineer believes that such Work is defective under the terms and standards set forth in the Construction Contract Documents. Provide recommendations to Owner regarding whether Contractor should correct such Work or remove and replace such Work, or whether Owner should consider accepting such Work as provided in the Construction Contract Documents.

11. *Compatibility with Design Concept:* If Engineer has express knowledge that a specific part of the Work that is not defective under the terms and standards set forth in the Construction Contract Documents is nonetheless not compatible with the design concept of the completed Project as a functioning whole, then inform Owner of such incompatibility, and provide recommendations for addressing such Work.

12. *Clarifications and Interpretations:* Accept from Contractor and Owner submittal of all matters in question concerning the requirements of the Construction Contract Documents (sometimes referred to as requests for information or interpretation—RFIs), or relating to the acceptability of the Work under the Construction Contract Documents. With reasonable promptness, render a written clarification, interpretation, or decision on the issue submitted, or initiate an amendment or supplement to the Construction Contract Documents.

13. *Non-reviewable Matters:* If a submitted matter in question concerns the Engineer's performance of its duties and obligations, or terms and conditions of the Construction Contract Documents that do not involve (1) the performance or acceptability of the Work under the Construction Contract Documents, (2) the design (as set forth in the Drawings, Specifications, or otherwise), or (3) other engineering or technical matters, then Engineer will promptly give written notice to Owner and Contractor that Engineer will not provide a decision or interpretation.

14. *Field Orders:* Subject to any limitations in the Construction Contract Documents, Engineer may prepare and issue Field Orders requiring minor changes in the Work.

15. *Change Orders and Work Change Directives:* Recommend Change Orders and Work Change Directives to Owner, as appropriate, and prepare Change Orders and Work Change Directives as required.

16. *Differing Site Conditions:* Respond to any notice from Contractor of differing site conditions, including conditions relating to underground facilities such as utilities, and

Copyright © 2014 National Society of Professional Engineers, American Council of Engineering Companies, and American Society of Civil Engineers. All rights reserved.

hazardous environmental conditions. Promptly conduct reviews and prepare findings, conclusions, and recommendations for Owner's use.

17. *Shop Drawings, Samples, and Other Submittals:* Review and approve or take other appropriate action with respect to Shop Drawings, Samples, and other required Contractor submittals, but only for conformance with the information given in the Construction Contract Documents and compatibility with the design concept of the completed Project as a functioning whole as indicated by the Construction Contract Documents. Such reviews and approvals or other action will not extend to means, methods, techniques, sequences, or procedures of construction or to safety precautions and programs incident thereto. Engineer shall meet any Contractor's submittal schedule that Engineer has accepted.

18. *Substitutes and "Or-equal":* Evaluate and determine the acceptability of substitute or "or-equal" materials and equipment proposed by Contractor, but subject to the provisions of Paragraph A2.02.A.2 of this Exhibit A.

19. *Inspections and Tests:*

    a. Receive and review all certificates of inspections, tests, and approvals required by Laws and Regulations or the Construction Contract Documents. Engineer's review of such certificates will be for the purpose of determining that the results certified indicate compliance with the Construction Contract Documents and will not constitute an independent evaluation that the content or procedures of such inspections, tests, or approvals comply with the requirements of the Construction Contract Documents. Engineer shall be entitled to rely on the results of such inspections and tests.

    b. As deemed reasonably necessary, request that Contractor uncover Work that is to be inspected, tested, or approved.

    c. Pursuant to the terms of the Construction Contract, require special inspections or testing of the Work, whether or not the Work is fabricated, installed, or completed.

20. *Change Proposals and Claims:* (a) Review and respond to Change Proposals. Review each duly submitted Change Proposal from Contractor and, within 30 days after receipt of the Contractor's supporting data, either deny the Change Proposal in whole, approve it in whole, or deny it in part and approve it in part. Such actions shall be in writing, with a copy provided to Owner and Contractor. If the Change Proposal does not involve the design (as set forth in the Drawings, Specifications, or otherwise), the acceptability of the Work, or other engineering or technical matters, then Engineer will notify the parties that the Engineer will not resolve the Change Proposal. (b) Provide information or data to Owner regarding engineering or technical matters pertaining to Claims.

21. *Applications for Payment:* Based on Engineer's observations as an experienced and qualified design professional and on review of Applications for Payment and accompanying supporting documentation:

    a. Determine the amounts that Engineer recommends Contractor be paid. Recommend reductions in payment (set-offs) based on the provisions for set-offs

Copyright © 2014 National Society of Professional Engineers, American Council of Engineering Companies, and American Society of Civil Engineers. All rights reserved.

stated in the Construction Contract. Such recommendations of payment will be in writing and will constitute Engineer's representation to Owner, based on such observations and review, that, to the best of Engineer's knowledge, information and belief, Contractor's Work has progressed to the point indicated, the Work is generally in accordance with the Construction Contract Documents (subject to an evaluation of the Work as a functioning whole prior to or upon Substantial Completion, to the results of any subsequent tests called for in the Construction Contract Documents, and to any other qualifications stated in the recommendation), and the conditions precedent to Contractor's being entitled to such payment appear to have been fulfilled in so far as it is Engineer's responsibility to observe the Work. In the case of unit price Work, Engineer's recommendations of payment will include final determinations of quantities and classifications of the Work (subject to any subsequent adjustments allowed by the Construction Contract Documents).

b. By recommending payment, Engineer shall not thereby be deemed to have represented that observations made by Engineer to check the quality or quantity of Contractor's Work as it is performed and furnished have been exhaustive, extended to every aspect of Contractor's Work in progress, or involved detailed inspections of the Work beyond the responsibilities specifically assigned to Engineer in this Agreement. Neither Engineer's review of Contractor's Work for the purposes of recommending payments nor Engineer's recommendation of any payment including final payment will impose on Engineer responsibility to supervise, direct, or control the Work, or for the means, methods, techniques, sequences, or procedures of construction or safety precautions or programs incident thereto, or Contractor's compliance with Laws and Regulations applicable to Contractor's furnishing and performing the Work. It will also not impose responsibility on Engineer to make any examination to ascertain how or for what purposes Contractor has used the money paid to Contractor by Owner; to determine that title to any portion of the Work, including materials or equipment, has passed to Owner free and clear of any liens, claims, security interests, or encumbrances; or that there may not be other matters at issue between Owner and Contractor that might affect the amount that should be paid.

22. *Contractor's Completion Documents:* Receive from Contractor, review, and transmit to Owner maintenance and operating instructions, schedules, guarantees, bonds, certificates or other evidence of insurance required by the Construction Contract Documents, certificates of inspection, tests and approvals, and Shop Drawings, Samples, and other data approved as provided under Paragraph A1.05.A.17. Receive from Contractor, review, and transmit to Owner the annotated record documents which are to be assembled by Contractor in accordance with the Construction Contract Documents to obtain final payment. The extent of Engineer's review of record documents shall be to check that Contractor has submitted all pages.

23. *Substantial Completion:* Promptly after notice from Contractor that Contractor considers the entire Work ready for its intended use, in company with Owner and Contractor, visit the Site to review the Work and determine the status of completion. Follow the procedures in the Construction Contract regarding the preliminary certificate of Substantial Completion, punch list of items to be completed, Owner's objections,

Copyright © 2014 National Society of Professional Engineers, American Council of Engineering Companies, and American Society of Civil Engineers. All rights reserved.

notice to Contractor, and issuance of a final certificate of Substantial Completion. Assist Owner regarding any remaining engineering or technical matters affecting Owner's use or occupancy of the Work following Substantial Completion.

24. *Other Tasks:* Perform or provide the following other Construction Phase tasks or deliverables: N/A

25. *Final Notice of Acceptability of the Work:* Conduct a final visit to the Project to determine if the Work is complete and acceptable so that Engineer may recommend, in writing, final payment to Contractor. Accompanying the recommendation for final payment, Engineer shall also provide a notice to Owner and Contractor in the form attached hereto as Exhibit E ("Notice of Acceptability of Work") that the Work is acceptable (subject to the provisions of the Notice and Paragraph A1.05.A.21.b) to the best of Engineer's knowledge, information, and belief, and based on the extent of the services provided by Engineer under this Agreement.

26. *Standards for Certain Construction-Phase Decisions:* Engineer will render decisions regarding the requirements of the Construction Contract Documents, and judge the acceptability of the Work, pursuant to the specific procedures set forth in the Construction Contract for initial interpretations, Change Proposals, and acceptance of the Work. In rendering such decisions and judgments, Engineer will not show partiality to Owner or Contractor, and will not be liable to Owner, Contractor, or others in connection with any proceedings, interpretations, decisions, or judgments conducted or rendered in good faith.

B. *Duration of Construction Phase:* The Construction Phase will commence with the execution of the first Construction Contract for the Project or any part thereof and will terminate upon written recommendation by Engineer for final payment to Contractors. If the Project involves more than one prime contract as indicated in Paragraph A1.03.D, then Construction Phase services may be rendered at different times in respect to the separate contracts. Subject to the provisions of Article 3, Engineer shall be entitled to an equitable increase in compensation if Construction Phase services (including Resident Project Representative services, if any) are required after the original date for completion and readiness for final payment of Contractor as set forth in the Construction Contract.

A1.06 *Post-Construction Phase*

A. Upon written authorization from Owner during the Post-Construction Phase, Engineer shall:

1. Together with Owner, visit the Project to observe any apparent defects in the Work, make recommendations as to replacement or correction of defective Work, if any, or the need to repair of any damage to the Site or adjacent areas, and assist Owner in consultations and discussions with Contractor concerning correction of any such defective Work and any needed repairs.

2. Together with Owner, visit the Project within one month before the end of the Construction Contract's correction period to ascertain whether any portion of the Work or the repair of any damage to the Site or adjacent areas is defective and therefore subject to correction by Contractor.

Copyright © 2014 National Society of Professional Engineers, American Council of Engineering Companies, and American Society of Civil Engineers. All rights reserved.

3. Perform or provide the following other Post-Construction Phase tasks or deliverables: N/A

B. The Post-Construction Phase services may commence during the Construction Phase and, if not otherwise modified in this Exhibit A, will terminate twelve months after the commencement of the Construction Contract's correction period.

PART 2 – ADDITIONAL SERVICES

A2.01 *Additional Services Requiring Owner's Written Authorization*

A. If authorized in writing by Owner, Engineer shall provide Additional Services of the types listed below. These services are not included as part of Basic Services and will be paid for by Owner as indicated in Exhibit C.

1. Preparation of applications and supporting documents (in addition to those furnished under Basic Services) for private or governmental grants, loans, or advances in connection with the Project; preparation or review of environmental assessments and impact statements; review and evaluation of the effects on the design requirements for the Project of any such statements and documents prepared by others; and assistance in obtaining approvals of authorities having jurisdiction over the anticipated environmental impact of the Project.

2. Services to make measured drawings of existing conditions or facilities, to conduct tests or investigations of existing conditions or facilities, or to verify the accuracy of drawings or other information furnished by Owner or others.

3. Services resulting from significant changes in the scope, extent, or character of the portions of the Project designed or specified by Engineer, or the Project's design requirements, including, but not limited to, changes in size, complexity, Owner's schedule, character of construction, or method of financing; and revising previously accepted studies, reports, Drawings, Specifications, or Construction Contract Documents when such revisions are required by changes in Laws and Regulations enacted subsequent to the Effective Date or are due to any other causes beyond Engineer's control.

4. Services resulting from Owner's request to evaluate additional Study and Report Phase alternative solutions beyond those agreed to in Paragraph A1.01.A.1 and 2.

5. Services required as a result of Owner's providing incomplete or incorrect Project information to Engineer.

6. Providing renderings or models for Owner's use, including services in support of building information modeling or civil integrated management.

7. Undertaking investigations and studies including, but not limited to:

   a. detailed consideration of operations, maintenance, and overhead expenses;

Copyright © 2014 National Society of Professional Engineers, American Council of Engineering Companies, and American Society of Civil Engineers. All rights reserved.

b. the preparation of feasibility studies (such as those that include projections of output capacity, utility project rates, project market demand, or project revenues) and cash flow analyses, provided that such services are based on the engineering and technical aspects of the Project, and do not include rendering advice regarding municipal financial products or the issuance of municipal securities;

c. preparation of appraisals;

d. evaluating processes available for licensing, and assisting Owner in obtaining process licensing;

e. detailed quantity surveys of materials, equipment, and labor; and

f. audits or inventories required in connection with construction performed or furnished by Owner.

8. Furnishing services of Consultants for other than Basic Services.

9. Providing data or services of the types described in Exhibit B, when Owner retains Engineer to provide such data or services instead of Owner furnishing the same.

10. Providing the following services:

    a. Services attributable to more prime construction contracts than specified in Paragraph A1.03.D.

    b. Services to arrange for performance of construction services for Owner by contractors other than the principal prime Contractor and administering Owner's contract for such services.

11. Services during out-of-town travel required of Engineer, other than for visits to the Site or Owner's office as required in Basic Services (Part 1 of Exhibit A).

12. Preparing for, coordinating with, participating in and responding to structured independent review processes, including, but not limited to, construction management, cost estimating, project peer review, value engineering, and constructability review requested by Owner; and performing or furnishing services required to revise studies, reports, Drawings, Specifications, or other documents as a result of such review processes.

13. Preparing additional bidding-related documents (or requests for proposals or other construction procurement documents) or Construction Contract Documents for alternate bids or cost estimates requested by Owner for the Work or a portion thereof.

14. Assistance in connection with bid protests, rebidding, or renegotiating contracts for construction, materials, equipment, or services, except when such assistance is required to complete services required by Paragraph 5.02.A and Exhibit F.

15. Preparing conformed Construction Contract Documents that incorporate and integrate the content of all Addenda and any amendments negotiated by Owner and Contractor.

Copyright © 2014 National Society of Professional Engineers, American Council of Engineering Companies, and American Society of Civil Engineers. All rights reserved.

16. Providing Construction Phase services beyond the original date for completion and readiness for final payment of Contractor, but only if such services increase the total quantity of services to be performed in the Construction Phase, rather than merely shifting performance of such services to a later date.

17. Preparing Record Drawings, and furnishing such Record Drawings to Owner.

18. Supplementing Record Drawings with information regarding the completed Project, Site, and immediately adjacent areas obtained from field observations, Owner, utility companies, and other reliable sources.

19. Conducting surveys, investigations, and field measurements to verify the accuracy of Record Drawing content obtained from Contractor, Owner, utility companies, and other sources; revise and supplement Record Drawings as needed.

20. Preparation of operation, maintenance, and staffing manuals.

21. Protracted or extensive assistance in refining and adjusting of Project equipment and systems (such as initial startup, testing, and balancing).

22. Assistance to Owner in training Owner's staff to operate and maintain Project equipment and systems.

23. Assistance to Owner in developing systems and procedures for (a) control of the operation and maintenance of Project equipment and systems, and (b) related recordkeeping.

24. Preparing to serve or serving as a consultant or witness for Owner in any litigation, arbitration, lien or bond claim, or other legal or administrative proceeding involving the Project.

25. Overtime work requiring higher than regular rates.

26. Providing construction surveys and staking to enable Contractor to perform its work other than as required under Paragraph A1.05.A.8; any type of property surveys or related engineering services needed for the transfer of interests in real property; and providing other special field surveys.

27. Providing more extensive services required to enable Engineer to issue notices or certifications requested by Owner.

28. Extensive services required during any correction period, or with respect to monitoring Contractor's compliance with warranties and guarantees called for in the Construction Contract (except as agreed to under Basic Services).

29. Other additional services performed or furnished by Engineer not otherwise provided for in this Agreement.

Copyright © 2014 National Society of Professional Engineers, American Council of Engineering Companies, and American Society of Civil Engineers. All rights reserved.

A2.02 *Additional Services Not Requiring Owner's Written Authorization*

A. Engineer shall advise Owner that Engineer is commencing to perform or furnish the Additional Services of the types listed below. For such Additional Services, Engineer need not request or obtain specific advance written authorization from Owner. Engineer shall cease performing or furnishing such Additional Services upon receipt of written notice to cease from Owner.

1. Services in connection with Work Change Directives and Change Orders to reflect changes requested by Owner.

2. Services in making revisions to Drawings and Specifications occasioned by the acceptance of substitute materials or equipment other than "or equal" items; services after the award of the Construction Contract in evaluating and determining the acceptability of a proposed "or equal" or substitution which is found to be inappropriate for the Project; evaluation and determination of an excessive number of proposed "or equals" or substitutions, whether proposed before or after award of the Construction Contract.

3. Services resulting from significant delays, changes, or price increases occurring as a direct or indirect result of materials, equipment, or energy shortages.

4. Additional or extended services arising from (a) the presence at the Site of any Constituent of Concern or items of historical or cultural significance, (b) emergencies or acts of God endangering the Work, (c) damage to the Work by fire or other causes during construction, (d) a significant amount of defective, neglected, or delayed Work, (e) acceleration of the progress schedule involving services beyond normal working hours, or (f) default by Contractor.

5. Services (other than Basic Services during the Post-Construction Phase) in connection with any partial utilization of the Work by Owner prior to Substantial Completion.

6. Evaluating unreasonable or frivolous requests for interpretation or information (RFIs), Change Proposals, or other demands from Contractor or others in connection with the Work, or an excessive number of RFIs, Change Proposals, or demands.

7. Reviewing a Shop Drawing or other Contractor submittal more than three times, as a result of repeated inadequate submissions by Contractor.

8. While at the Site, compliance by Engineer and its staff with those terms of Owner's or Contractor's safety program provided to Engineer subsequent to the Effective Date that exceed those normally required of engineering personnel by federal, State, or local safety authorities for similar construction sites.

Copyright © 2014 National Society of Professional Engineers, American Council of Engineering Companies, and American Society of Civil Engineers. All rights reserved.

This is **EXHIBIT B**, consisting of **3** pages, referred to in and part of the **Agreement between Owner and Engineer for Professional Services** dated _____.

Owner's Responsibilities

Article 2 of the Agreement is supplemented to include the following agreement of the parties.

B2.01 In addition to other responsibilities of Owner as set forth in this Agreement, Owner shall at its expense:

A. Provide Engineer with all criteria and full information as to Owner's requirements for the Project, including design objectives and constraints, space, capacity and performance requirements, flexibility, and expandability, and any budgetary limitations.

B. Give instructions to Engineer regarding Owner's procurement of construction services (including instructions regarding advertisements for bids, instructions to bidders, and requests for proposals, as applicable), Owner's construction contract practices and requirements, insurance and bonding requirements, electronic transmittals during construction, and other information necessary for the finalization of Owner's bidding-related documents (or requests for proposals or other construction procurement documents), and Construction Contract Documents. Furnish copies (or give specific directions requesting Engineer to use copies already in Engineer's possession) of all design and construction standards, Owner's standard forms, general conditions (if other than EJCDC® C-700, Standard General Conditions of the Construction Contract, 2013 Edition), supplementary conditions, text, and related documents and content for Engineer to include in the draft bidding-related documents (or requests for proposals or other construction procurement documents), and draft Construction Contract Documents, when applicable. Owner shall have responsibility for the final content of (1) such bidding-related documents (or requests for proposals or other construction procurement documents), and (2) those portions of any Construction Contract other than the design (as set forth in the Drawings, Specifications, or otherwise), and other engineering or technical matters; and Owner shall seek the advice of Owner's legal counsel, risk managers, and insurance advisors with respect to the drafting and content of such documents.

C. Furnish to Engineer any other available information pertinent to the Project including reports and data relative to previous designs, construction, or investigation at or adjacent to the Site.

D. Following Engineer's assessment of initially-available Project information and data and upon Engineer's request, obtain, furnish, or otherwise make available (if necessary through title searches, or retention of specialists or consultants) such additional Project-related information and data as is reasonably required to enable Engineer to complete its Basic and Additional Services. Such additional information or data would generally include the following:

1. Property descriptions.

2. Zoning, deed, and other land use restrictions.

Copyright © 2014 National Society of Professional Engineers, American Council of Engineering Companies, and American Society of Civil Engineers. All rights reserved.

3. Utility and topographic mapping and surveys.

4. Property, boundary, easement, right-of-way, and other special surveys or data, including establishing relevant reference points.

5. Explorations and tests of subsurface conditions at or adjacent to the Site; geotechnical reports and investigations; drawings of physical conditions relating to existing surface or subsurface structures at the Site; hydrographic surveys, laboratory tests and inspections of samples, materials, and equipment; with appropriate professional interpretation of such information or data.

6. Environmental assessments, audits, investigations, and impact statements, and other relevant environmental, historical, or cultural studies relevant to the Project, the Site, and adjacent areas.

7. Data or consultations as required for the Project but not otherwise identified in this Agreement.

E. Arrange for safe access to and make all provisions for Engineer to enter upon public and private property as required for Engineer to perform services under the Agreement.

F. Recognizing and acknowledging that Engineer's services and expertise do not include the following services, provide, as required for the Project:

1. Accounting, bond and financial advisory (including, if applicable, "municipal advisor" services as described in Section 975 of the Dodd-Frank Wall Street Reform and Consumer Protection Act (2010) and the municipal advisor registration rules issued by the Securities and Exchange Commission), independent cost estimating, and insurance counseling services.

2. Legal services with regard to issues pertaining to the Project as Owner requires, Contractor raises, or Engineer reasonably requests.

3. Such auditing services as Owner requires to ascertain how or for what purpose Contractor has used the money paid.

G. Provide the services of an independent testing laboratory to perform all inspections, tests, and approvals of samples, materials, and equipment required by the Construction Contract Documents (other than those required to be furnished or arranged by Contractor), or to evaluate the performance of materials, equipment, and facilities of Owner, prior to their incorporation into the Work with appropriate professional interpretation thereof. Provide Engineer with the findings and reports generated by testing laboratories, including findings and reports obtained from or through Contractor.

H. Provide reviews, approvals, and permits from all governmental authorities having jurisdiction to approve all phases of the Project designed or specified by Engineer and such reviews, approvals, and consents from others as may be necessary for completion of each phase of the Project.

Copyright © 2014 National Society of Professional Engineers, American Council of Engineering Companies, and American Society of Civil Engineers. All rights reserved.

I. Advise Engineer of the identity and scope of services of any independent consultants employed by Owner to perform or furnish services in regard to the Project, including, but not limited to, cost estimating, project peer review, value engineering, and constructability review.

J. If Owner designates a construction manager or an individual or entity other than, or in addition to, Engineer to represent Owner at the Site, define and set forth as an attachment to this Exhibit B the duties, responsibilities, and limitations of authority of such other party and the relation thereof to the duties, responsibilities, and authority of Engineer.

K. If more than one prime contract is to be awarded for the Work designed or specified by Engineer, then designate a person or entity to have authority and responsibility for coordinating the activities among the various prime Contractors, and define and set forth the duties, responsibilities, and limitations of authority of such individual or entity and the relation thereof to the duties, responsibilities, and authority of Engineer as an attachment to this Exhibit B that is to be mutually agreed upon and made a part of this Agreement before such services begin.

L. Inform Engineer in writing of any specific requirements of safety or security programs that are applicable to Engineer, as a visitor to the Site.

M. Examine all alternative solutions, studies, reports, sketches, Drawings, Specifications, proposals, and other documents presented by Engineer (including obtaining advice of an attorney, risk manager, insurance counselor, financial/municipal advisor, and other advisors or consultants as Owner deems appropriate with respect to such examination) and render in writing timely decisions pertaining thereto.

N. Inform Engineer regarding any need for assistance in evaluating the possible use of Project Strategies, Technologies, and Techniques, as defined in Exhibit A.

O. Advise Engineer as to whether Engineer's assistance is requested in identifying opportunities for enhancing the sustainability of the Project.

P. Place and pay for advertisement for Bids in appropriate publications.

Q. Furnish to Engineer data as to Owner's anticipated costs for services to be provided by others (including, but not limited to, accounting, bond and financial, independent cost estimating, insurance counseling, and legal advice) for Owner so that Engineer may assist Owner in collating the various cost categories which comprise Total Project Costs.

R. Attend and participate in the pre-bid conference, bid opening, pre-construction conferences, construction progress and other job related meetings, and Site visits to determine Substantial Completion and readiness of the completed Work for final payment.

S. Authorize Engineer to provide Additional Services as set forth in Part 2 of Exhibit A of the Agreement, as required.

T. Perform or provide the following: N/A

Copyright © 2014 National Society of Professional Engineers, American Council of Engineering Companies, and American Society of Civil Engineers. All rights reserved.

This is **EXHIBIT C**, consisting of 6 pages, referred to in and part of the Agreement between Owner and Engineer for Professional Services dated _____.

Payments to Engineer for Services and Reimbursable Expenses
Basic Services – Lump Sum

Article 2 of the Agreement is supplemented to include the following agreement of the parties:

ARTICLE 2 – OWNER'S RESPONSIBILITIES

C2.01 *Compensation for Basic Services (other than Resident Project Representative) – Lump Sum Method of Payment*

U. Owner shall pay Engineer for Basic Services set forth in Exhibit A, except for services of Engineer's Resident Project Representative, if any, as follows:

1. A Lump Sum amount of **$108,654.00** based on the following estimated distribution of compensation:

a.	Preliminary Design Phase	$**32,596.00**
b.	Final Design Phase	$**69,539.00**
c.	Bidding and Negotiating Phase	$ **2,173.00**
d.	Construction Phase	$ **2,173.00**
e.	Post-Construction Phase	$ **2,173.00**

2. Engineer may alter the distribution of compensation between individual phases noted herein to be consistent with services actually rendered, but shall not exceed the total Lump Sum amount unless approved in writing by the Owner.

3. The Lump Sum includes compensation for Engineer's services and services of Engineer's Consultants, if any. Appropriate amounts have been incorporated in the Lump Sum to account for labor costs, overhead, profit, expenses (other than any expressly allowed Reimbursable Expenses), and Consultant charges.

4. In addition to the Lump Sum, Engineer is also entitled to reimbursement from Owner for the following Reimbursable Expenses (see Appendix 1 for rates or charges): None.

5. The portion of the Lump Sum amount billed for Engineer's services will be based upon Engineer's estimate of the percentage of the total services actually completed during the billing period. If any Reimbursable Expenses are expressly allowed, Engineer may also bill for any such Reimbursable Expenses incurred during the billing period.

Copyright © 2014 National Society of Professional Engineers, American Council of Engineering Companies, and American Society of Civil Engineers. All rights reserved.

V. *Period of Service:* The compensation amount stipulated in Compensation Packet BC-1 is conditioned on a period of service not exceeding 12 months. If such period of service is extended, the compensation amount for Engineer's services shall be appropriately adjusted.

Copyright © 2014 National Society of Professional Engineers, American Council of Engineering Companies, and American Society of Civil Engineers. All rights reserved.

Resident Project Representative – Standard Hourly Rates

Article 2 of the Agreement is supplemented to include the following agreement of the parties:

C2.04 *Compensation for Resident Project Representative Basic Services – Standard Hourly Rates Method of Payment*

W. *Owner shall pay Engineer for Resident Project Representative Basic Services as follows:*

1. *Resident Project Representative Services:* For services of Engineer's Resident Project Representative under Paragraph A1.05.A of Exhibit A, an amount equal to the cumulative hours charged to the Project by each class of Engineer's personnel times Standard Hourly Rates for each applicable billing class for all Resident Project Representative services performed on the Project, plus related Reimbursable Expenses and Engineer's Consultant's charges, if any. The total compensation under this paragraph is estimated to be **$84,774.00** based a **200** day construction schedule.

X. *Compensation for Reimbursable Expenses:*

1. For those Reimbursable Expenses that are not accounted for in the compensation for Basic Services under Paragraph C2.01, and are directly related to the provision of Resident Project Representative or Post-Construction Basic Services, Owner shall pay Engineer at the rates set forth in Appendix 1 to this Exhibit C.

2. Reimbursable Expenses include the expenses identified in Appendix 1 and the following: transportation (including mileage), lodging, and subsistence incidental thereto; providing and maintaining field office facilities including furnishings and utilities; subsistence and transportation of Resident Project Representative and assistants; toll telephone calls, mobile phone charges, and courier charges; reproduction of reports, Drawings, Specifications, bidding-related or other procurement documents, Construction Contract Documents, and similar Project-related items. In addition, if authorized in advance by Owner, Reimbursable Expenses will also include expenses incurred for the use of highly specialized equipment.

3. The amounts payable to Engineer for Reimbursable Expenses, if any, will be those internal expenses related to the Resident Project Representative Basic Services that are actually incurred or allocated by Engineer, plus all invoiced external Reimbursable Expenses allocable to such services, the latter multiplied by a factor of **1.1**.

4. The Reimbursable Expenses Schedule will be adjusted annually (as of **January 1, 2019**) to reflect equitable changes in the compensation payable to Engineer.

Y. *Other Provisions Concerning Payment Under this Paragraph C2.04:*

1. Whenever Engineer is entitled to compensation for the charges of Engineer's Consultants, those charges shall be the amounts billed by Engineer's Consultants to Engineer times a factor of **1.1**.

Copyright © 2014 National Society of Professional Engineers, American Council of Engineering Companies, and American Society of Civil Engineers. All rights reserved.

2. *Factors*: The external Reimbursable Expenses and Engineer's Consultant's factors include Engineer's overhead and profit associated with Engineer's responsibility for the administration of such services and costs.

3. *Estimated Compensation Amounts*:

   a. Engineer's estimate of the amounts that will become payable for specified services are only estimates for planning purposes, are not binding on the parties, and are not the minimum or maximum amounts payable to Engineer under the Agreement.

   b. When estimated compensation amounts have been stated herein and it subsequently becomes apparent to Engineer that the total compensation amount thus estimated will be exceeded, Engineer shall give Owner written notice thereof, allowing Owner to consider its options, including suspension or termination of Engineer's services for Owner's convenience. Upon notice Owner and Engineer promptly shall review the matter of services remaining to be performed and compensation for such services. Owner shall either exercise its right to suspend or terminate Engineer's services for Owner's convenience, agree to such compensation exceeding said estimated amount, or agree to a reduction in the remaining services to be rendered by Engineer, so that total compensation for such services will not exceed said estimated amount when such services are completed. If Owner decides not to suspend Engineer's services during negotiations and Engineer exceeds the estimated amount before Owner and Engineer have agreed to an increase in the compensation due Engineer or a reduction in the remaining services, then Engineer shall be paid for all services rendered hereunder.

To the extent necessary to verify Engineer's charges and upon Owner's timely request, Engineer shall make copies of such records available to Owner at cost.

Copyright © 2014 National Society of Professional Engineers, American Council of Engineering Companies, and American Society of Civil Engineers. All rights reserved.

Additional Services – Standard Hourly Rates

Article 2 of the Agreement is supplemented to include the following agreement of the parties:

C2.05 Compensation for Additional Services – Standard Hourly Rates Method of Payment

A. Owner shall pay Engineer for Additional Services, if any, as follows:

1. *General*: For services of Engineer's personnel engaged directly on the Project pursuant to Paragraph A2.01 or A2.02 of Exhibit A, except for services as a consultant or witness under Paragraph A2.01.A.20, (which if needed shall be separately negotiated based on the nature of the required consultation or testimony) an amount equal to the cumulative hours charged to the Project by each class of Engineer's personnel times Standard Hourly Rates for each applicable billing class for all Additional Services performed on the Project, plus related Reimbursable Expenses and Engineer's Consultant's charges, if any.

B. *Compensation For Reimbursable Expenses:*

1. For those Reimbursable Expenses that are not accounted for in the compensation for Basic Services under Paragraph C2.01 and are directly related to the provision of Additional Services, Owner shall pay Engineer at the rates set forth in Appendix 1 to this Exhibit C.

2. Reimbursable Expenses include the expenses identified in Appendix 1 and the following categories: transportation (including mileage), lodging, and subsistence incidental thereto; providing and maintaining field office facilities including furnishings and utilities; toll telephone calls, mobile phone charges, and courier charges; reproduction of reports, Drawings, Specifications, bidding-related or other procurement documents, Construction Contract Documents, and similar Project-related items; and Consultants' charges. In addition, if authorized in advance by Owner, Reimbursable Expenses will also include expenses incurred for the use of highly specialized equipment.

3. The amounts payable to Engineer for Reimbursable Expenses, if any, will be the Additional Services-related internal expenses actually incurred or allocated by Engineer, plus all invoiced external Reimbursable Expenses allocable to such Additional Services, the latter multiplied by a factor of **1.1**.

4. The Reimbursable Expenses Schedule will be adjusted annually (as of January 1, 2019) to reflect equitable changes in the compensation payable to Engineer.

C. *Other Provisions Concerning Payment for Additional Services:*

1. Whenever Engineer is entitled to compensation for the charges of Engineer's Consultants, those charges shall be the amounts billed by Engineer's Consultants to Engineer times a factor of **1.1**.

Copyright © 2014 National Society of Professional Engineers, American Council of Engineering Companies, and American Society of Civil Engineers. All rights reserved.

2. *Factors:* The external Reimbursable Expenses and Engineer's Consultant's Factors include Engineer's overhead and profit associated with Engineer's responsibility for the administration of such services and costs.

3. To the extent necessary to verify Engineer's charges and upon Owner's timely request, Engineer shall make copies of such records available to Owner at cost.

Copyright © 2014 National Society of Professional Engineers, American Council of Engineering Companies, and American Society of Civil Engineers. All rights reserved.

This is **Appendix 2 to EXHIBIT C**, consisting of **1** pages, referred to in and part of the **Agreement between Owner and Engineer for Professional Services** dated _____.

Standard Hourly Rates Schedule - 2017

A. *Standard Hourly Rates:*

1. Standard Hourly Rates are set forth in this Appendix 2 to this Exhibit C and include salaries and wages paid to personnel in each billing class plus the cost of customary and statutory benefits, general and administrative overhead, non-project operating costs, and operating margin or profit.

2. The Standard Hourly Rates apply only as specified in Article C2.

B. *Schedule:*

Hourly rates for services performed on or after the date of the Agreement are:

Senior Engineer	**$175/hour**
Project Engineer	**$150/hour**
Junior Engineer	**$125/hour**
Engineering Intern	**$105/hour**
Graduate Engineer	**$105/hour**
Senior AutoCad Technician	**$105/hour**
AutoCad Technician	**$90/hour**
Senior Resident Project Representative	**$95/hour**
Resident Project Representative	**$85/hour**
Field Crew	**$175/hour**
Administrative	**$45/hour**

Copyright © 2014 National Society of Professional Engineers, American Council of Engineering Companies, and American Society of Civil Engineers. All rights reserved.

This is **EXHIBIT D**, consisting of 5 pages, referred to in and part of the **Agreement between Owner and Engineer for Professional Services** dated _____.

Duties, Responsibilities, and Limitations of Authority of Resident Project Representative

Article 1 of the Agreement is supplemented to include the following agreement of the parties:

ARTICLE 1 - SERVICES OF ENGINEER

D1.01 *Resident Project Representative*

A. Engineer shall furnish a Resident Project Representative ("RPR") to assist Engineer in observing progress and quality of the Work. The RPR may provide full time representation or may provide representation to a lesser degree. RPR is Engineer's representative at the Site, will act as directed by and under the supervision of Engineer, and will confer with Engineer regarding RPR's actions.

B. Through RPR's observations of the Work, including field checks of materials and installed equipment, Engineer shall endeavor to provide further protection for Owner against defects and deficiencies in the Work. However, Engineer shall not, as a result of such RPR observations of the Work, supervise, direct, or have control over the Work, nor shall Engineer (including the RPR) have authority over or responsibility for the means, methods, techniques, sequences, or procedures of construction selected or used by any Constructor, for security or safety at the Site, for safety precautions and programs incident to the Work or any Constructor's work in progress, for the coordination of the Constructors' work or schedules, or for any failure of any Constructor to comply with Laws and Regulations applicable to the performing and furnishing of its work. The Engineer (including RPR) neither guarantees the performances of any Constructor nor assumes responsibility for any Constructor's failure to furnish and perform the Work, or any portion of the Work, in accordance with the Construction Contract Documents. In addition, the specific terms set forth in Exhibit A, Paragraph A1.05, of this Agreement are applicable.

C. The duties and responsibilities of the RPR are as follows:

1. *General:* RPR's dealings in matters pertaining to the Work in general shall be with Engineer and Contractor. RPR's dealings with Subcontractors shall only be through or with the full knowledge and approval of Contractor. RPR shall generally communicate with Owner only with the knowledge of and under the direction of Engineer.

2. *Schedules:* Review the progress schedule, schedule of Shop Drawing and Sample submittals, schedule of values, and other schedules prepared by Contractor and consult with Engineer concerning acceptability of such schedules.

3. *Conferences and Meetings:* Attend meetings with Contractor, such as preconstruction conferences, progress meetings, job conferences, and other Project-related meetings (but not including Contractor's safety meetings), and as appropriate prepare and circulate copies of minutes thereof.

Copyright © 2014 National Society of Professional Engineers, American Council of Engineering Companies, and American Society of Civil Engineers. All rights reserved.

4. *Safety Compliance:* Comply with Site safety programs, as they apply to RPR, and if required to do so by such safety programs, receive safety training specifically related to RPR's own personal safety while at the Site.

5. *Liaison:*

   a. Serve as Engineer's liaison with Contractor. Working principally through Contractor's authorized representative or designee, assist in providing information regarding the provisions and intent of the Construction Contract Documents.

   b. Assist Engineer in serving as Owner's liaison with Contractor when Contractor's operations affect Owner's on-Site operations.

   c. Assist in obtaining from Owner additional details or information, when required for proper execution of the Work.

6. *Clarifications and Interpretations:* Receive from Contractor submittal of any matters in question concerning the requirements of the Construction Contract Documents (sometimes referred to as requests for information or interpretation—RFIs), or relating to the acceptability of the Work under the Construction Contract Documents. Report to Engineer regarding such RFIs. Report to Engineer when clarifications and interpretations of the Construction Contract Documents are needed, whether as the result of a Contractor RFI or otherwise. Transmit Engineer's clarifications, interpretations, and decisions to Contractor. ,

7. *Shop Drawings and Samples:*

   a. Record date of receipt of Samples and Contractor-approved Shop Drawings.

   b. Receive Samples that are furnished at the Site by Contractor and notify Engineer of availability of Samples for examination.

   c. Advise Engineer and Contractor of the commencement of any portion of the Work requiring a Shop Drawing or Sample submittal, if RPR believes that the submittal has not been received from Contractor or has not been approved by Contractor or Engineer.

8. *Proposed Modifications:* Consider and evaluate Contractor's suggestions for modifications to the Drawings or Specifications, and report such suggestions, together with RPR's recommendations, if any, to Engineer. Transmit Engineer's response (if any) to such suggestions to Contractor.

9. *Review of Work; Defective Work:*

   a. Report to Engineer whenever RPR believes that any part of the Work is defective under the terms and standards set forth in the Construction Contract Documents and provide recommendations as to whether such Work should be corrected, removed and replaced, or accepted as provided in the Construction Contract Documents.

Copyright © 2014 National Society of Professional Engineers, American Council of Engineering Companies, and American Society of Civil Engineers. All rights reserved.

b. Inform Engineer of any Work that RPR believes is not defective under the terms and standards set forth in the Construction Contract Documents, but is nonetheless not compatible with the design concept of the completed Project as a functioning whole, and provide recommendations to Engineer for addressing such Work; and

c. Advise Engineer of that part of the Work that RPR believes should be uncovered for observation, or requires special testing, inspection, or approval.

10. *Inspections, Tests, and System Start-ups:*

a. Consult with Engineer in advance of scheduled inspections, tests, and systems start-ups.

b. Verify that tests, equipment, and systems start-ups and operating and maintenance training are conducted in the presence of appropriate Owner's personnel, and that Contractor maintains adequate records thereof.

c. Observe, record, and report to Engineer appropriate details relative to the test procedures and systems start-ups.

d. Observe whether Contractor has arranged for inspections required by Laws and Regulations, including but not limited to those to be performed by public or other agencies having jurisdiction over the Work.

e. Accompany visiting inspectors representing public or other agencies having jurisdiction over the Work, record the results of these inspections, and report to Engineer.

11. *Records:*

a. Maintain at the Site orderly files for correspondence, reports of job conferences, copies of Construction Contract Documents including all Change Orders, Field Orders, Work Change Directives, Addenda, additional Drawings issued subsequent to the execution of the Construction Contract, RFIs, Engineer's clarifications and interpretations of the Construction Contract Documents, progress reports, approved Shop Drawing and Sample submittals, and other Project-related documents.

b. Prepare a daily report or keep a diary or log book, recording Contractor's hours on the Site, Subcontractors present at the Site, weather conditions, data relative to questions of Change Orders, Field Orders, Work Change Directives, or changed conditions, Site visitors, deliveries of equipment or materials, daily activities, decisions, observations in general, and specific observations in more detail as in the case of observing test procedures; and send copies to Engineer.

c. Upon request from Owner to Engineer, photograph or video Work in progress or Site conditions.

d. Record and maintain accurate, up-to-date lists of the names, addresses, fax numbers, e-mail addresses, websites, and telephone numbers (including mobile

Copyright © 2014 National Society of Professional Engineers, American Council of Engineering Companies, and American Society of Civil Engineers. All rights reserved.

numbers) of all Contractors, Subcontractors, and major Suppliers of materials and equipment.

e. Maintain records for use in preparing Project documentation.

f. Upon completion of the Work, furnish original set of all RPR Project documentation to Engineer.

12. *Reports:*

a. Furnish to Engineer periodic reports as required of progress of the Work and of Contractor's compliance with the progress schedule and schedule of Shop Drawing and Sample submittals.

b. Draft and recommend to Engineer proposed Change Orders, Work Change Directives, and Field Orders. Obtain backup material from Contractor.

c. Furnish to Engineer and Owner copies of all inspection, test, and system start-up reports.

d. Immediately inform Engineer of the occurrence of any Site accidents, emergencies, acts of God endangering the Work, possible force majeure or delay events, damage to property by fire or other causes, or the discovery of any potential differing site condition or Constituent of Concern.

13. *Payment Requests:* Review applications for payment with Contractor for compliance with the established procedure for their submission and forward with recommendations to Engineer, noting particularly the relationship of the payment requested to the schedule of values, Work completed, and materials and equipment delivered at the Site but not incorporated in the Work.

14. *Certificates, Operation and Maintenance Manuals:* During the course of the Work, verify that materials and equipment certificates, operation and maintenance manuals and other data required by the Contract Documents to be assembled and furnished by Contractor are applicable to the items actually installed and in accordance with the Contract Documents, and have these documents delivered to Engineer for review and forwarding to Owner prior to payment for that part of the Work.

15. *Completion:*

a. Participate in Engineer's visits to the Site regarding Substantial Completion, assist in the determination of Substantial Completion, and prior to the issuance of a Certificate of Substantial Completion submit a punch list of observed items requiring completion or correction.

b. Participate in Engineer's visit to the Site in the company of Owner and Contractor, to determine completion of the Work, and prepare a final punch list of items to be completed or corrected by Contractor.

Copyright © 2014 National Society of Professional Engineers, American Council of Engineering Companies, and American Society of Civil Engineers. All rights reserved.

c. Observe whether all items on the final punch list have been completed or corrected, and make recommendations to Engineer concerning acceptance and issuance of the Notice of Acceptability of the Work.

D. Resident Project Representative shall not:

1. Authorize any deviation from the Construction Contract Documents or substitution of materials or equipment (including "or-equal" items).

2. Exceed limitations of Engineer's authority as set forth in this Agreement.

3. Undertake any of the responsibilities of Contractor, Subcontractors, or Suppliers, or any Constructor.

4. Advise on, issue directions relative to, or assume control over any aspect of the means, methods, techniques, sequences or procedures of the Work, by Contractor or any other Constructor.

5. Advise on, issue directions regarding, or assume control over security or safety practices, precautions, and programs in connection with the activities or operations of Owner or Contractor.

6. Participate in specialized field or laboratory tests or inspections conducted off-site by others except as specifically authorized by Engineer.

7. Accept Shop Drawing or Sample submittals from anyone other than Contractor.

8. Authorize Owner to occupy the Project in whole or in part.

Copyright © 2014 National Society of Professional Engineers, American Council of Engineering Companies, and American Society of Civil Engineers. All rights reserved.

This is **EXHIBIT G**, consisting of **2** pages, referred to in and part of the **Agreement between Owner and Engineer for Professional Services** dated _____.

Insurance

Paragraph 6.05 of the Agreement is supplemented to include the following agreement of the parties:

G6.05 *Insurance*

A. The limits of liability for the insurance required by Paragraph 6.05.A and 6.05.B of the Agreement are as follows:

1. By Engineer:

a. Workers' Compensation: Statutory

b. Employer's Liability --

1) Bodily injury, each accident: $100,000
2) Bodily injury by disease, each employee: $100,000
3) Bodily injury/disease, aggregate: $500,000

c. General Liability --

1) Each Occurrence (Bodily Injury and Property Damage): $1,000,000
2) General Aggregate: $2,000,000

d. Excess or Umbrella Liability --

1) Per Occurrence: $2,000,000
2) General Aggregate:

e. Automobile Liability --Combined Single Limit (Bodily Injury and Property Damage):

$1,000,000

f. Professional Liability –

1) Each Claim Made $1,000,000
2) Annual Aggregate $1,000,000

g. Other (specify): N/A

Copyright © 2014 National Society of Professional Engineers, American Council of Engineering Companies, and American Society of Civil Engineers. All rights reserved.

B. *Additional Insureds:*

1. The following individuals or entities are to be listed on Owner's general liability policies of insurance as additional insureds:

   a. Shows, Dearman and Waits, Inc.
   Engineer

   b. N/A
   Engineer's Consultant

   c. N/A
   Engineer's Consultant

   d. N/A
   [other]

2. During the term of this Agreement the Engineer shall notify Owner of any other Consultant to be listed as an additional insured on Owner's general liability policies of insurance.

3. The Owner shall be listed on Engineer's general liability policy as provided in Paragraph 6.05.A.

Copyright © 2014 National Society of Professional Engineers, American Council of Engineering Companies, and American Society of Civil Engineers. All rights reserved.

This is **EXHIBIT I**, consisting of 1 pages, referred to in and part of the **Agreement between Owner and Engineer for Professional Services** dated _____.

Limitations of Liability

Paragraph 6.11 of the Agreement is supplemented to include the following agreement of the parties:

A. *Limitation of Engineer's Liability*

1. *Engineer's Liability Limited to Amount of Engineer's Compensation:* To the fullest extent permitted by Laws and Regulations, and notwithstanding any other provision of this Agreement, the total liability, in the aggregate, of Engineer and Engineer's officers, directors, members, partners, agents, employees, and Consultants, to Owner and anyone claiming by, through, or under Owner for any and all claims, losses, costs, or damages whatsoever arising out of, resulting from, or in any way related to the Project or the Agreement from any cause or causes, including but not limited to the negligence, professional errors or omissions, strict liability, breach of contract, indemnity obligations, or warranty express or implied of Engineer or Engineer's officers, directors, members, partners, agents, employees, or Consultants shall not exceed the total compensation received by Engineer under this Agreement.

B. *Indemnification by Owner*: To the fullest extent permitted by Laws and Regulations, Owner shall indemnify and hold harmless Engineer and its officers, directors, members, partners, agents, employees, and Consultants from and against any and all claims, costs, losses, and damages (including but not limited to all fees and charges of engineers, architects, attorneys, and other professionals, and all court, arbitration, or other dispute resolution costs) arising out of or relating to the Project, provided that any such claim, cost, loss, or damage is attributable to bodily injury, sickness, disease, or death or to injury to or destruction of tangible property (other than the Work itself), including the loss of use resulting therefrom, but only to the extent caused by any negligent act or omission of Owner or Owner's officers, directors, members, partners, agents, employees, consultants, or others retained by or under contract to the Owner with respect to this Agreement or to the Project.

Copyright © 2014 National Society of Professional Engineers, American Council of Engineering Companies, and American Society of Civil Engineers. All rights reserved.

Copyright © 2014 National Society of Professional Engineers, American Council of Engineering Companies,
and American Society of Civil Engineers. All rights reserved.

Opinion of Probable Costs	Proj. No.: 11275	Date: July 6, 2018

Audubon-Westwood & Lynnwood Neighborhoods, Shadowwood Drive and Huckleberry Lane

Water Improvements Project

Item	Description	Unit	Quantity	Unit Price	Extension
1	Ridgeway Lane	Lin. Ft.	1,750	$100.00	$175,000.00
2	Evergreen Lane	Lin. Ft.	600	$100.00	$60,000.00
3	Woodhaven Drive	Lin. Ft.	900	$100.00	$90,000.00
4	Pineview Drive	Lin. Ft.	650	$100.00	$65,000.00
5	1st Terrace	Lin. Ft.	1,350	$100.00	$135,000.00
6	2nd Terrace	Lin. Ft.	1,350	$100.00	$135,000.00
7	3rd Terrace	Lin. Ft.	1,350	$100.00	$135,000.00
8	Huckleberry Lane	Lin. Ft.	500	$100.00	$50,000.00
9	Shadowwood Drive	Lin. Ft.	550	$100.00	$55,000.00
				Project Subtotal:	$900,000.00
		20%		Contingencies:	$180,000.00
				Project Total:	$1,080,000.00
				Engineering:	$98,280.00
				Construction E & I:	$76,680.00
				Project GrandTotal:	$1,254,960.00

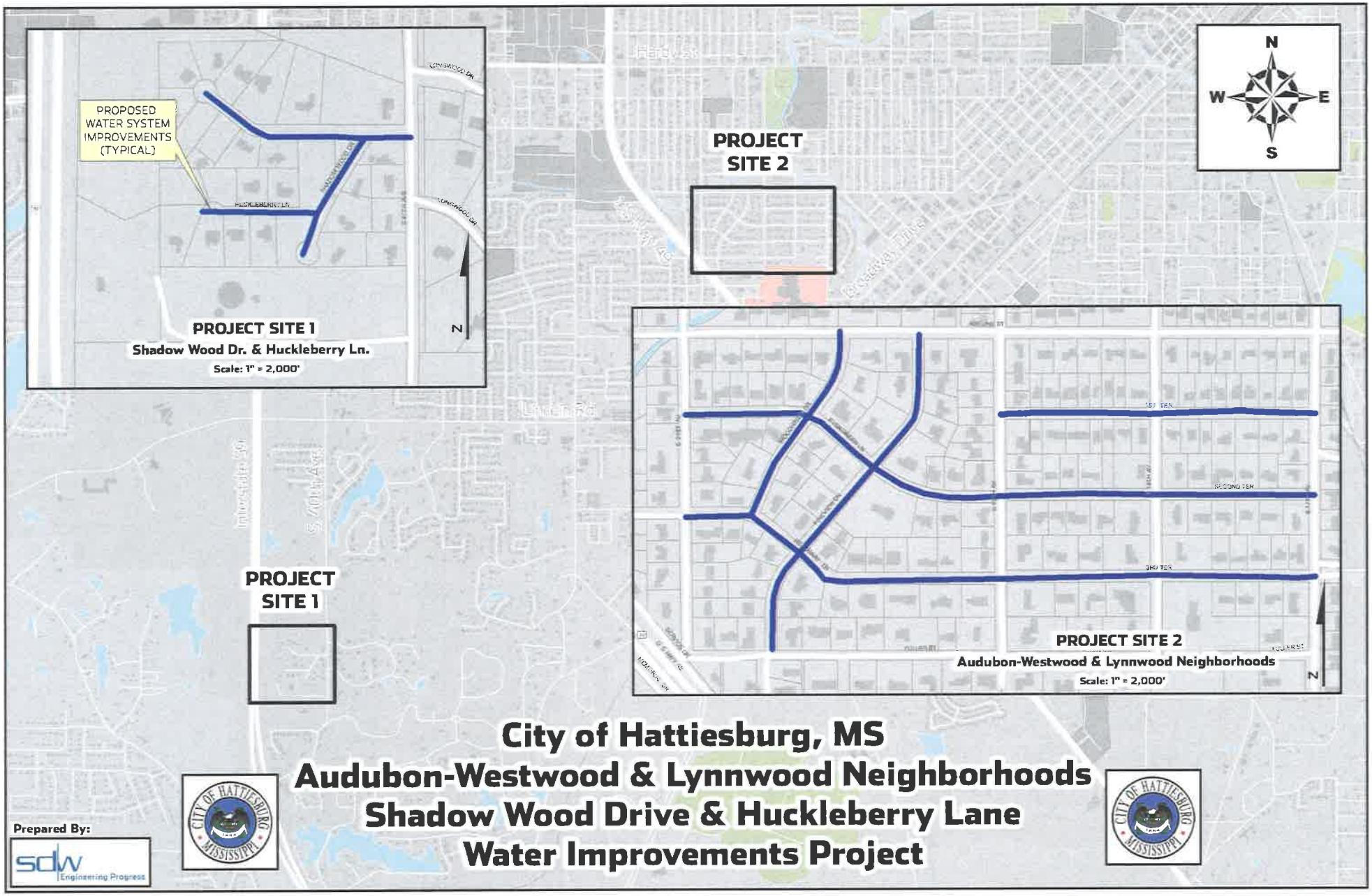
PROPOSED WATER SYSTEM IMPROVEMENTS (TYPICAL)
PROJECT SITE 1
Shadow Wood Dr. & Huckleberry Ln.
Scale: 1" = 2,000'
PROJECT SITE 2
PROJECT SITE 1
PROJECT SITE 2
Audubon-Westwood & Lynnwood Neighborhoods
Scale: 1" = 2,000'
N
W
E
S
City of Hattiesburg, MS
Audubon-Westwood & Lynnwood Neighborhoods
Shadow Wood Drive & Huckleberry Lane
Water Improvements Project
Prepared By:
sdw
Engineering Progress
CITY OF HATTIESBURG MISSISSIPPI

City of Hattiesburg, MS

200 Forrest St.
P.O. Box 1898
Hattiesburg, MS 39401

Master

File Number: 2018-671

File ID:	2018-671	**Type:**	Regular Agenda Item	**Status:**	Agenda Ready
Version:	1	**Reference:**		**In Control:**	City Council
Requester:	Andrew Ellard			**File Created:**	08/02/2018
Brief Title:	Change Order No. 2 - Hub City Transit Facility Construction Project			**Final Action:**	08/07/2018
				Minute Book Number:	MB 2018-194

Title:

Authorize the Mayor to execute Change Order No 2 in an additional amount of $12,466.58 associated with the Hub City Transit Facility Construction Project.

Notes: Needs Mayor's signature as quickly as possible to avoid delay in the project.

		Agenda Date:	08/07/2018
Indexes:		**Agenda Number:**	VI.-13
Sponsors:		**Enactment Date:**	
Attachments:	G701-2017 Change Order 2 combined, Executed - Change Order 2 Hub City Transit Facility Construction Project	**Enactment Number:**	
Contact:		**Meeting Date:**	08/07/2018
Drafter:	Andrew Ellard	**Effective Date:**	

History of Legislative File

Version:	Acting Body:	Date:	Action:	Sent To:	Due Date:	Return Date:	Result:
1	City Council	08/07/2018	Authorize				Pass

Action Text: A MOTION was made by Council Member Brown and seconded by Council Member George to Authorize the Mayor to execute Change Order No 2 in an additional amount of $12,466.58 associated with the Hub City Transit Facility Construction Project.

There being no discussion, the Motion received the affirmative vote of the Council as follows:

Yeas: 5 - George, Delgado, Carroll, Dryden and Brown

Nays: 0

Yea: 5
Council Member George
Council Member Delgado
Council President Carroll
Council Vice President Dryden
Council Member Brown

Text of Legislative File 2018-671

Title

Authorize the Mayor to execute Change Order No 2 in an additional amount of $12,466.58 associated with the Hub City Transit Facility Construction Project.

Summary

Change Order No. 2 - Hub City Transit Facility Construction Project

Budget Information

Expenditure Type

Purchasing Item

Publication Information

AIA® Document G701™ – 2017

Change Order

PROJECT: *(Name and address)*	CONTRACT INFORMATION:	CHANGE ORDER INFORMATION:
Hub City Transit's Operations and Maintenance Facility Hattiesburg, Mississippi	Contract For: General Construction Date: 2/6/18	Change Order Number: 002 Date: 8/2/18
OWNER: *(Name and address)* City of Hattiesburg 200 Forrest Street Hattiesburg, MS 39403	**ARCHITECT:** *(Name and address)* Major Design Studio, PLLC 414-1 Main Street Columbus, MS 39701	**CONTRACTOR:** *(Name and address)* Greater Southeastern Construction, LLC 20 Bellegrass BLVD Hattiesburg, MS 39402

THE CONTRACT IS CHANGED AS FOLLOWS:
(Insert a detailed description of the change and, if applicable, attach or reference specific exhibits. Also include agreed upon adjustments attributable to executed Construction Change Directives.)

RECONCILIATION OF LIQUIDATED DAMAGES AND CONTRACT CHANGES AS FOLLOWS:

Previous Contract Completion Date: **January 14, 2019**

New Contract Completion Date: **January 19, 2019**

CONTRACT CHANGES:

1. Install bridge lift over the unstable soils placing a wove geotextile and an 18" lift of engineered fill on top of unstable area. Compact to 92% - 95% on the upper 6" of the bridge lift.

TOTAL: $12,466.58 **(ADD)**

The original Contract Sum was	$	1,053,000.00
The net change by previously authorized Change Orders	$	24,028.00
The Contract Sum prior to this Change Order was	$	1,077,028.00
The Contract Sum will be increased by this Change Order in the amount of	$	12,466.58
The new Contract Sum including this Change Order will be	$	1,089,494.58

The Contract Time will be increased by Five (5) days.
The new date of Substantial Completion will be 1/19/19

NOTE: This Change Order does not include adjustments to the Contract Sum or Guaranteed Maximum Price, or the Contract Time, that have been authorized by Construction Change Directive until the cost and time have been agreed upon by both the Owner and Contractor, in which case a Change Order is executed to supersede the Construction Change Directive.

NOT VALID UNTIL SIGNED BY THE ARCHITECT, CONTRACTOR AND OWNER.

Major Design Studio, PLLC **ARCHITECT** *(Firm name)*	Southeastern Construction, LLC **CONTRACTOR** *(Firm name)*	City of Hattiesburg **OWNER** *(Firm name)*
SIGNATURE	**SIGNATURE**	**SIGNATURE**
Major Andrews IV, Principal **PRINTED NAME AND TITLE**	Joseph Davion, Vice President **PRINTED NAME AND TITLE**	Toby Barker, Mayor **PRINTED NAME AND TITLE**
8\2\18 **DATE**	8\2\18 **DATE**	8\2\18 **DATE**

AIA Document G701™ – 2017. Copyright © 1979, 1987, 2000 , 2001 and 2017 by The American Institute of Architects. **All rights reserved. WARNING: This AIA® Document is protected by U.S. Copyright Law and International Treaties. Unauthorized reproduction or distribution of this AIA® Document, or any portion of it, may result in severe civil and criminal penalties, and will be prosecuted to the maximum extent possible under the law.** This document was produced by AIA software at 15:00:37 on 06/29/2018 under Order No. 2635231591 which expires on 06/22/2019, and is not for resale.
User Notes: (3B9ADA29)

Hub City Transit Facility

Change Order Breakdown
Unstable Soil Conditions Resolution

Work item		Cost
Install bridge lift over the unstable soils placing a wove geotextile and an 18" lift of engineered fill on top of unstable areas. Compact to 92%-95% on the upper 6" of the bridge lift.		$ 10,950.00
	OHP	$ 1,095.00
	Tax	$ 421.58
	Total Change Order Amount	**$ 12,466.58**

R & J Construction, Inc.

P.O. Box 6
Laurel, MS 39441

R&J CONSTRUCTION
LAUREL, MISSISSIPPI

Change Order Proposal

Date	Estimate #
8/1/2018	1937

Name / Address
Colony Construction 12 Bellegrass Blvd. Hattiesburg, MS 39402

Project

Description	Total
Hub City Transit (Unstable Soil Conditions)	
Cut/Export	3,250.00
Import Fill	5,200.00
Woven Geotextile	2,500.00

Phone #	Fax #	E-mail
601-426-1042	601-426-1044	info@randjconst.com

Total $10,950.00

AIA® Document G701™ – 2017

Change Order

PROJECT: *(Name and address)*	CONTRACT INFORMATION:	CHANGE ORDER INFORMATION:
Hub City Transit's Operations and Maintenance Facility Hattiesburg, Mississippi	Contract For: General Construction Date: 2/6/18	Change Order Number: 002 Date: 8/2/18
OWNER: *(Name and address)* City of Hattiesburg 200 Forrest Street Hattiesburg, MS 39403	**ARCHITECT:** *(Name and address)* Major Design Studio, PLLC 414-1 Main Street Columbus, MS 39701	**CONTRACTOR:** *(Name and address)* Greater Southeastern Construction, LLC 20 Bellegrass BLVD Hattiesburg, MS 39402

THE CONTRACT IS CHANGED AS FOLLOWS:
(Insert a detailed description of the change and, if applicable, attach or reference specific exhibits. Also include agreed upon adjustments attributable to executed Construction Change Directives.)

RECONCILIATION OF LIQUIDATED DAMAGES AND CONTRACT CHANGES AS FOLLOWS:

Previous Contract Completion Date: **January 14, 2019**

New Contract Completion Date: **January 19, 2019**

CONTRACT CHANGES:

1. Install bridge lift over the unstable soils placing a wove geotextile and an 18" lift of engineered fill on top of unstable area. Compact to 92% - 95% on the upper 6" of the bridge lift.

TOTAL: $12,466.58 **(ADD)**

The original Contract Sum was	$	1,053,000.00
The net change by previously authorized Change Orders	$	24,028.00
The Contract Sum prior to this Change Order was	$	1,077,028.00
The Contract Sum will be increased by this Change Order in the amount of	$	12,466.58
The new Contract Sum including this Change Order will be	$	1,089,494.58

The Contract Time will be increased by Five (5) days.
The new date of Substantial Completion will be 1/19/19

NOTE: This Change Order does not include adjustments to the Contract Sum or Guaranteed Maximum Price, or the Contract Time, that have been authorized by Construction Change Directive until the cost and time have been agreed upon by both the Owner and Contractor, in which case a Change Order is executed to supersede the Construction Change Directive.

NOT VALID UNTIL SIGNED BY THE ARCHITECT, CONTRACTOR AND OWNER.

Major Design Studio, PLLC **ARCHITECT** *(Firm name)*	Southeastern Construction, LLC **CONTRACTOR** *(Firm name)*	City of Hattiesburg **OWNER** *(Firm name)*
SIGNATURE	**SIGNATURE**	**SIGNATURE**
Major Andrews IV, Principal **PRINTED NAME AND TITLE**	Joseph Davion, Vice President **PRINTED NAME AND TITLE**	Toby Barker, Mayor **PRINTED NAME AND TITLE**
8\2\18 **DATE**	8\2\18 **DATE**	8\2\18 **DATE**

AIA Document G701™ – 2017. Copyright © 1979, 1987, 2000 , 2001 and 2017 by The American Institute of Architects. **All rights reserved. WARNING: This AIA® Document is protected by U.S. Copyright Law and International Treaties. Unauthorized reproduction or distribution of this AIA® Document, or any portion of it, may result in severe civil and criminal penalties, and will be prosecuted to the maximum extent possible under the law.** This document was produced by AIA software at 15:00:37 on 06/29/2018 under Order No. 2635231591 which expires on 06/22/2019, and is not for resale.
User Notes: (3B9ADA29)

Hub City Transit Facility

Change Order Breakdown
Unstable Soil Conditions Resolution

Work item		Cost
Install bridge lift over the unstable soils placing a wove geotextile and an 18" lift of engineered fill on top of unstable areas. Compact to 92%-95% on the upper 6" of the bridge lift.		$ 10,950.00
	OHP	$ 1,095.00
	Tax	$ 421.58
	Total Change Order Amount	**$ 12,466.58**

R & J Construction, Inc.

P.O. Box 6
Laurel, MS 39441

R&J CONSTRUCTION
LAUREL, MISSISSIPPI

Change Order Proposal

Date	Estimate #
8/1/2018	1937

Name / Address
Colony Construction 12 Bellegrass Blvd. Hattiesburg, MS 39402

Project

Description	Total
Hub City Transit (Unstable Soil Conditions)	
Cut/Export	3,250.00
Import Fill	5,200.00
Woven Geotextile	2,500.00

Phone #
601-426-1042

Fax #
601-426-1044

E-mail
info@randjconst.com

Total $10,950.00

City of Hattiesburg, MS

200 Forrest St.
P.O. Box 1898
Hattiesburg, MS 39401

Master

File Number: 2018-664

File ID:	2018-664	**Type:**	Regular Agenda Item	**Status:**	Passed
Version:	1	**Reference:**		**In Control:**	City Council
Requester:				**File Created:**	07/31/2018
Brief Title:	Approve or Deny changes to wages and salaries proposed in accordance with Ord.3154.			**Final Action:**	08/07/2018
				Minute Book Number:	MB 2018-194

Title:

Approve or Deny changes to wages and salaries proposed in accordance with Ordinance.3154.

Notes:			
		Agenda Date:	
Indexes:		**Agenda Number:**	VI.-14
Sponsors:		**Enactment Date:**	
Attachments:	Salaries-Data Sheet	**Enactment Number:**	
Contact:		**Meeting Date:**	
Drafter:		**Effective Date:**	

History of Legislative File

Version:	Acting Body:	Date:	Action:	Sent To:	Due Date:	Return Date:	Result:
1	City Council	08/07/2018	Approve				Pass

Action Text: A MOTION was made by Council Vice President Dryden and seconded by Council Member George to Approve or Deny changes to wages and salaries proposed in accordance with Ordinance.3154.

There being no discussion, the Motion received the affirmative vote of the Council as follows:

Yeas: 5 - George, Delgado, Carroll, Dryden and Brown

Nays: 0

Yea: 5 Council Member George
Council Member Delgado
Council President Carroll
Council Vice President Dryden
Council Member Brown

Text of Legislative File 2018-664

Title

Approve or Deny changes to wages and salaries proposed in accordance with Ordinance.3154.

Summary

Changes to wages and salaries in accordance to Ord.3154.

Budget Information

Expenditure Type

Purchasing Item

Publication Information

Urban Development	New Position Annual Rate	Maximum FY18 Expenditure
New Positions Requested		
Mass Transit Division		
Driver	27,040	3,640
Driver	27,040	3,640
Driver	27,040	3,640
TOTAL	**$ 81,120.00**	**$ 10,920.00**

Three new driver positions will be proposed in the FY19 budget to better manage the new bus routes. Drivers are currently being required to work considerable overtime, which is not sustainable. Due to some vacancies earlier in the year, as of July 25, 2018, HCT is projected to come in **$75,000 under** its budgeted wage (and overtime) line. Enabling the Division to hire these positions even 5-7 weeks ahead of FY19 will make a significant positive impact.

Purchasing Division

Purchasing Assistant PURCHAST45-2	$ 33,995.00	$ 42,995.00
Delete ASTDIVMGR45-1	$ 35,000.00	
Total	$ 68,995.00	$ 42,995.00

Water Department-Customer Accounts Division

Retitle Crew Worker CRWWRKR660-3 to Collection Assistant	$ 21,060.00	$ 22,880.00
Total	$ 21,060.00	$ 22,880.00

City of Hattiesburg, MS

200 Forrest St.
P.O. Box 1898
Hattiesburg, MS 39401

Master

File Number: 2018-665

File ID:	2018-665	**Type:**	Regular Agenda Item	**Status:**	Approved
Version:	1	**Reference:**		**In Control:**	City Council
Requester:				**File Created:**	07/31/2018
Brief Title:	Appointment of Adrienne Graham to Recreation Board.			**Final Action:**	08/07/2018
				Minute Book Number:	MB 2018-194-195

Title:

Ratify and confirm the Mayor's appointment of Adrienne Graham(W4) to the Recreation Board for a five (5) year term beginning August 7,2018 and ending August 6,2023.

Notes:

		Agenda Date:	08/07/2018
Indexes:		**Agenda Number:**	VI.-15
Sponsors:		**Enactment Date:**	
Attachments:	Graham-Data Sheet, Graham-Resume	**Enactment Number:**	
Contact:		**Meeting Date:**	
Drafter:		**Effective Date:**	

History of Legislative File

Version:	Acting Body:	Date:	Action:	Sent To:	Due Date:	Return Date:	Result:
1	City Council	08/07/2018	Ratify and Confirm				Pass

Action Text: A MOTION was made by Council Vice President Dryden and seconded by Council Member George to Ratify and confirm the Mayor's appointment of Adrienne Graham(W4) to the Recreation Board for a five (5) year term beginning August 7,2018 and ending August 6, 2023.

There being no discussion, the Motion received the affirmative vote of the Council as follows:

Yeas: 5 - George, Delgado, Carroll, Dryden and Brown

Nays: 0

Yea: 5 Council Member George
Council Member Delgado
Council President Carroll
Council Vice President Dryden
Council Member Brown

Text of Legislative File 2018-665

Title

Ratify and confirm the Mayor's appointment of Adrienne Graham(W4) to the Recreation Board for a five (5) year term beginning August 7,2018 and ending August 6,2023.

Summary

Appointment of Adrienne Graham to Recreation Board.

Budget Information

Expenditure Type

Purchasing Item

Publication Information

BOARD/COMMISSION APPOINTMENT DATA SHEET

BOARD/COMMISSION: Recreation Board

TERM OF OFFICE: 5 years PERIOD: _____ **REPLACES:** ____

_____

TERM EXPIRED: _____ OR RESIGNED: _____ Letter attached_____

DOES THIS POSITION REQUIRE A PUBLIC OFFICIAL'S BOND? YES ____ NO X

****

NAME OF PROPOSED APPOINTEE: **Adrienne Graham**

PLEASE GIVE FULL NAME, IF NICKNAME IS USED, PLEASE PUT IN PARENTHESIS ( )

ADDRESS: 1115 Adeline St #1

HOME PHONE NUMBER: _____ WARD: 4

PLACE OF EMPLOYMENT: _____

EMPLOYMENT ADDRESS: _____

EMPLOYMENT PHONE NO.: _____ POSITION: _____

****

PERSON CONTACTED BY: Mayor Toby Barker DATE: _____

TO BE CONTACTED BY: _____ DATE CONTACTED: _____

AGREED TO SERVE: X DECLINED: _____

ADRIENNE GRAHAM

601-434-3793
adriennegraham@comcast.net

1115 Adeline #1
Hattiesburg MS
39401

Experience

Office Manager
Hattiesburg Orthodontics July 2005-present
Schedule patient appointments
Process insurance claims

Handle patient accounts

Perform basic IT tasks

Management , customer service and shipping
eValueville (highest volume eBay seller 2002) September 2001-June 2005

Customer communications

Creation of policy and procedure

Streamlined customer service operations

Ensure shipping competency

Worked with IT to develop profiles

Involved in Administrative decisions

Substitute Teacher
Hattiesburg Public Schools September 1996-May 2001

Teacher
Kinder Castle 1995-1996

Education

B.S. English with Speech comm minor
Dean's list August 1986-May 1991

References
Available upon request

City of Hattiesburg, MS

200 Forrest St.
P.O. Box 1898
Hattiesburg, MS 39401

Master

File Number: 2018-662

File ID:	2018-662	**Type:**	Regular Agenda Item	**Status:**	Approved
Version:	1	**Reference:**		**In Control:**	City Council
Requester:				**File Created:**	07/31/2018
Brief Title:	Advertise Notice of Public Hearing on proposed budget and tax levies for Fiscal Year 2019			**Final Action:**	
				Minute Book Number:	MB 2018-196

Title:

Set a public hearing on the proposed budget and proposed tax levies for fiscal year 2019 for 5:30 p.m. Tuesday, September 4, 2018, in Council Chambers at City Hall; Authorize advertisement of Notice of Public Hearing.

Notes:			
		Agenda Date:	08/07/2018
Indexes:		**Agenda Number:**	VII.-1
Sponsors:		**Enactment Date:**	
Attachments:	Public Hearing Notice FY 2019 Budget	**Enactment Number:**	
Contact:		**Meeting Date:**	08/07/2018
Drafter:		**Effective Date:**	

History of Legislative File

Version:	Acting Body:	Date:	Action:	Sent To:	Due Date:	Return Date:	Result:
1	City Council	08/07/2018	Approved on the Routine Agenda				
	Action Text:	Approved on the Routine Agenda					

Text of Legislative File 2018-662

Title

Set a public hearing on the proposed budget and proposed tax levies for fiscal year 2019 for 5:30 p.m. Tuesday, September 4, 2018, in Council Chambers at City Hall; Authorize advertisement of Notice of Public Hearing.

Summary

Public Hearing- FY 2019 Proposed Budget and Proposed Tax Levies

Budget Information

Expenditure Type

Purchasing Item

Publication Information

NOTICE OF A PUBLIC HEARING ON THE PROPOSED BUDGET AND PROPOSED TAX LEVIES FOR FISCAL YEAR 2019 FOR THE CITY OF HATTIESBURG, MS

The City of Hattiesburg will hold a public hearing on a proposed ad valorem tax revenue increase for Fiscal Year 2019 and on its proposed budget and proposed tax levies for Fiscal year 2019 on Tuesday, September 4, 2018, at 5:30 p.m. in the Council Chambers at City Hall, 200 Forrest Street, Hattiesburg, MS.

The City of Hattiesburg, Hattiesburg Municipal Separate School District, and the Library of Hattiesburg, Petal, and Forrest County are now operating with a projected total budget revenue of $183,593,452. Twenty-four percent (24%) or $44,512,591 of such revenue is obtained through ad valorem taxes. For next fiscal year, the proposed budget has total projected revenue of $185,958,973. Of that amount, 24%, or $44,450,948 is proposed to be financed through a total ad valorem tax levy.

For the next fiscal year, the City of Hattiesburg plans to increase your ad valorem tax millage rate by 1.75 mills from 115.48 mills to 117.23 mills. This increase means that you will pay more in ad valorem taxes on your home, automobile tag, utilities, business fixtures and equipment and rental real property.

A millage rate of 52.80 will produce the same amount of revenue from ad valorem taxes for the City of Hattiesburg as was collected the prior year. The millage rate for the previous year was 53.38.

A millage rate of 64.10 will produce the same amount of revenue from ad valorem taxes for the Hattiesburg Separate School District as was collected the prior year. The millage rate for the previous year was 62.10.

Any citizen of the City of Hattiesburg is invited to attend this public hearing on the proposed budget and tax levies for Fiscal Year 2019 and will be allowed to speak for a reasonable amount of time and offer tangible evidence before any vote is taken.

Publish August 16, 2018 and August 23, 2018:

The advertisement shall be no less than ¼ page in size and the type used shall be no smaller than 18 point and surrounded by a ¼ inch solid black border. The advertisement may not be placed in that portion of the newspaper where legal notices and classified advertisements appear. (Run in retail section.)

City of Hattiesburg, MS

200 Forrest St.
P.O. Box 1898
Hattiesburg, MS 39401

Master

File Number: 2018-640

File ID:	2018-640	**Type:**	Regular Agenda Item	**Status:**	Approved
Version:	1	**Reference:**		**In Control:**	City Council
Requester:				**File Created:**	07/18/2018
Brief Title:	Rental Agreement for the Police/Fire Training Academy			**Final Action:**	
				Minute Book Number:	MB 2018-196

Title:

Authorize Mayor to execute Rental Agreement betweeen the City of Hattiesburg and RJ Young for a copier located in the Fire/Police Training Academy, for a period of 48months, at a cost of $198.00 per month.

Notes:			
		Agenda Date:	08/07/2018
Indexes:		**Agenda Number:**	VII.-2
Sponsors:		**Enactment Date:**	
Attachments:	Police-Fire Copier rental agreement, Executed - Police-Fire Copier rental agreement	**Enactment Number:**	
Contact:		**Meeting Date:**	
Drafter:		**Effective Date:**	

History of Legislative File

Version:	Acting Body:	Date:	Action:	Sent To:	Due Date:	Return Date:	Result:
1	City Council	08/07/2018	Approved on the Routine Agenda				
	Action Text:	Approved on the Routine Agenda					

Text of Legislative File 2018-640

Title

Authorize Mayor to execute Rental Agreement betweeen the City of Hattiesburg and RJ Young for a copier located in the Fire/Police Training Academy, for a period of 48months, at a cost of $198.00 per month.

Summary

Police/Fire Training Academy copier Rental Agreement.

Budget Information

Expenditure Type

Purchasing Item

Publication Information

RENTAL AGREEMENT
FOR USE BY MISSISSIPPI AGENCIES & GOVERNING AUTHORITIES AND VENDORS
(applicable to equipment rental transactions)

This Rental Agreement (hereinafter referred to as Agreement) is entered into by and between

CITY OF HATTIESBURG
(hereinafter referred to as Customer), and **RJ Young** (hereinafter referred to as Vendor). This Agreement becomes effective upon signature by Customer and Vendor, and shall take precedence over all agreements and understandings between the parties. Vendor, by its acceptance hereof, agrees to rent to Customer, and Customer, by its acceptance hereof, agrees to rent from Vendor, the equipment, including applicable software and services to render it continually operational, listed in Exhibit A, which is attached hereto and incorporated herein.

1. CUSTOMER ACCOUNT ESTABLISHMENT:

A. A separate Vendor Customer Number will be required for each specific customer/installation location.

B. The Customer is identified as the entity on the first line of the "bill-to" address. All invoices and notices of changes will be sent to the "bill-to" address in accordance with Paragraph 8 herein.

C. Ship-to and/or Installed-at address is the location to which the initial shipment of equipment/supplies will be made and the address to which service representatives will respond. Subsequent shipments of supplies for installed equipment will also be delivered to the "installed-at" address unless otherwise requested.

D. Unless creditworthiness for this Customer Number has been previously established by Vendor, Vendor's Credit Department may conduct a credit investigation for this Agreement. Notwithstanding delivery of equipment, Vendor may revoke this Agreement by written notice to the Customer if credit approval is denied within thirty (30) days after the date this Agreement is accepted for Vendor by an authorized representative.

2. EQUIPMENT SELECTION, PRICES, AND AGREEMENT: The Customer has selected and Vendor agrees to provide the equipment, including applicable software and services to render it continually operational, identified on Exhibit A attached to this Agreement. The specific prices, inclusive of applicable transportation charges, are as set forth on the attached Exhibit A. The parties understand and agree that the Customer is exempt from the payment of taxes.

3. SHIPPING AND TRANSPORTATION: Vendor agrees to pay all non-priority, ground shipping, transportation, rigging and drayage charges for the equipment from the equipment's place of manufacture to the installation address of the equipment as specified under this Agreement. If any form of express shipping method is requested, it will be paid for by Customer.

4. RISK OF LOSS OR DAMAGE TO EQUIPMENT: While in transit, Vendor shall assume and bear the entire risk of loss and damage to the equipment from any cause whatsoever. If, during the period the equipment is in Customer's possession, due to gross negligence of the customer, the equipment is lost or damaged, then, the customer shall bear the cost of replacing or repairing said equipment.

5. DELIVERY, INSTALLATION, ACCEPTANCE, AND RELOCATION:

A. DELIVERY: Vendor shall deliver the equipment to the location specified by Customer and pursuant to the delivery schedule agreed upon by the parties. If, through no fault of the Customer, Vendor is unable to deliver the equipment or software, the prices, terms and conditions will remain unchanged until delivery is made by Vendor. If, however, Vendor does not deliver the equipment or software within ten (10) working days of the delivery due date, Customer shall have the right to terminate the order without penalty, cost or expense to Customer of any kind whatsoever.

B. INSTALLATION SITE: At the time of delivery and during the period Vendor is responsible for maintenance of the equipment, the equipment installation site must conform to Vendor's published space, electrical and environmental requirements; and the Customer agrees to provide, at no charge, reasonable access to the equipment and to a telephone for local or toll free calls.

C. INSTALLATION DATE: The installation date of the equipment shall be that date as is agreed upon by the parties, if Vendor is responsible for installing the equipment.

D. ACCEPTANCE: Unless otherwise agreed to by the parties, Vendor agrees that Customer shall have ten (10) working days from date of delivery and installation, to inspect, evaluate and test the equipment to confirm that it is in good working order.

E. RELOCATION: Customer may transfer equipment to a new location by notifying Vendor in writing of the transfer at least thirty (30) calendar days before the move is made. If Vendor is responsible for maintenance of the equipment, this notice will enable Vendor to provide technical assistance in the relocation efforts, if needed, as well as to update Vendor's records as to machine location. There will be no cessation of rental charges during the period of any such transfer. The Vendor's cost of moving and reinstalling equipment from one location to another is not included in this Agreement, and Customer agrees to pay Vendor, after receipt of invoice of Vendor's charges with respect to such moving of equipment, which will be billed to Customer in accordance with Vendor's standard practice then in effect for commercial users of similar equipment or software and payment remitted in accordance with Paragraph 8 herein.

6. RENTAL TERM: The rental term for each item of equipment shall be that as stated in the attached Exhibit A. If the Customer desires to continue renting the equipment at the expiration of the original rental agreement, the Customer must enter into a new rental agreement which shall be separate from this Agreement. There will be no automatic renewals allowed. There shall be no option to purchase.

7. OWNERSHIP: Unless the Customer has obtained title to the equipment, title to the equipment shall be and remain vested at all times in Vendor or its assignee and nothing in this Agreement shall give or convey to Customer any right, title or interest therein, unless purchased by Customer. Nameplates, stencils or other indicia of Vendor's ownership affixed or to be affixed to the equipment shall not be removed or obliterated by Customer.

8. PAYMENTS:

A. INVOICING AND PAYMENTS: The charges for the equipment, software or services covered by this Agreement are specified in the attached Exhibit A. Charges for any partial month for any item of equipment shall be prorated based on a thirty (30) day month. Vendor shall submit an invoice with the appropriate documentation to Customer.

1. E-PAYMENT: The Vendor agrees to accept all payments in United States currency via the State of Mississippi's electronic payment and remittance vehicle. The Customer agrees to make payment in accordance with Mississippi law on "Timely Payments for Purchases by Public Bodies", Section 31-7-301, *et seq.* of the 1972 Mississippi Code Annotated, as amended, which generally provides for payment of undisputed amounts by the agency within forty-five (45) days of receipt of the invoice.

2. PAYMODE: Payments by state agencies using Mississippi's Accountability System for Government Information and Collaboration (MAGIC) shall be made and remittance information provided electronically as directed by the State. The State, may at its sole discretion, require the Vendor to submit invoices and supporting documentation electronically at any time during the term of this Agreement. These payments shall be deposited into the bank account of the Vendor's choice. The Vendor understands and agrees that the State is exempt from the payment of taxes. All payments shall be in United States currency.

B. METER READINGS: If applicable, the Customer shall provide accurate and timely meter readings at the end

of each applicable billing period on the forms or other alternative means specified by Vendor. Vendor shall have the right, upon reasonable prior notice to Customer, and during Customer's regular business hours, to inspect the equipment and to monitor the meter readings. If Customer meter readings are not received in the time to be agreed upon by the parties, the meter readings may be obtained electronically or by other means or may be estimated by Vendor subject to reconciliation when the correct meter reading is received by Vendor.

C. COPY CREDITS: If applicable, if a copier is being rented, the Customer will receive one (1) copy credit for each copy presented to Vendor which, in the Customer's opinion, is unusable and also for each copy which was produced during servicing of the equipment. Copy credits will be issued only if Vendor is responsible for providing equipment services or maintenance services (except time and materials maintenance). Copy credits will be reflected on the invoice as a reduction in the total copy volume, except for run length plans which will be credited at a specific copy credit rate as shown on the applicable price list.

9. USE OF EQUIPMENT: Customer shall operate the equipment according to the manufacturer's specifications and documented instructions. Customer agrees not to employ or use additional attachments, features or devices on the equipment or make changes or alterations to the equipment covered hereby without the prior written consent of Vendor in each case, which consent shall not be unreasonably withheld.

10. MAINTENANCE SERVICES, EXCLUSIONS, AND REMEDIES:

A. SERVICES: If Vendor is responsible for providing equipment services, maintenance services (except for time and materials), or warranty services: (1) Vendor shall install and maintain the equipment and make all necessary adjustments and repairs to keep the equipment in good working order. (2) Parts required for repair may be used or reprocessed in accordance with Vendor's specifications and replaced parts are the property of Vendor, unless otherwise specifically provided on the price lists. (3) Services will be provided during Customer's usual business hours. (4) If applicable, Customer will permit Vendor to install, at no cost to Customer, all retrofits designated by Vendor as mandatory or which are designed to insure accuracy of meters.

B. EXCLUSIONS: The following is not within the scope of services: (1) Provision and installation of optional retrofits. (2) Services connected with equipment relocation. (3) Installation/removal of accessories, attachments or other devices. (4) Exterior painting or refinishing of equipment. (5) Maintenance, installation or removal of equipment or devices not provided by Vendor. (6) Performance of normal operator functions as described in applicable Vendor operator manuals. (7) Performance of services necessitated by accident; power failure; unauthorized alteration of equipment or software; tampering; service by someone other than Vendor; causes other than ordinary use; interconnection of equipment by electrical, or electronic or mechanical means with noncompatible equipment, or failure to use operating system software. If Vendor provides, at the request of the Customer, any of the services noted above, the Customer may be billed by Vendor at a rate not to exceed the Master State Prices Agreement between the Vendor and the State of Mississippi, or in the absence of such agreement at the then current time and materials rates.

C. REMEDIES: If during the period in which Vendor is providing maintenance services, Vendor is unable to maintain the equipment in good working order, Vendor will, at no additional charge, provide either an identical replacement or another product that provides equal or greater capabilities.

11. HOLD HARMLESS: To the fullest extent allowed by law, Vendor shall indemnify, defend, save and hold harmless, protect, and exonerate the Customer and the State of Mississippi, its Commissioners, Board Members, officers, employees, agents, and representatives from and against all claims, demands, liabilities, suits, actions, damages, losses, and costs of every kind and nature whatsoever, including, without limitation, court costs, investigative fees and expenses, and attorneys' fees, arising out of or caused by Vendor and/or its partners, principals, agents, employees, and/or subcontractors in the performance of or failure to perform this Agreement. In the Customer's sole discretion, Vendor may be allowed to control the defense of any such claim, suit, etc. In the event Vendor defends said claim, suit, etc., Vendor shall use legal counsel acceptable to the Customer; Vendor shall be solely liable for all reasonable costs and/or expenses associated with such defense and the Customer shall be entitled to participate in said defense. Vendor shall not settle any claim, suit, etc., without the Customer's concurrence,

which the Customer shall not unreasonably withhold.

12. ALTERATIONS, ATTACHMENTS, AND SUPPLIES:

A. If Customer makes an alteration, attaches a device or utilizes a supply item that increases the cost of services, Vendor will either propose an additional service charge or request that the equipment be returned to its standard configuration or that use of the supply item be discontinued. If, within five (5) days of such proposal or request, Customer does not remedy the problem or agree in writing to do so within a reasonable amount of time, Vendor shall have the right to terminate this Agreement as provided herein. If Vendor believes that an alteration, attachment or supply item affects the safety of Vendor personnel or equipment users, Vendor shall notify Customer of the problem and may withhold maintenance until the problem is remedied.

B. Unless Customer has obtained title to the equipment free and clear of any Vendor security interest, Customer may not remove any ownership identification tags on the equipment or allow the equipment to become fixtures to real property.

13. ASSIGNMENT: The Vendor shall not assign, subcontract or otherwise transfer in whole or in part, its right or obligations under this Agreement without prior written consent of the Customer. Any attempted assignment or transfer without said consent shall be void and of no effect.

14. GOVERNING LAW: This Agreement shall be governed by and construed in accordance with the laws of the State of Mississippi, excluding its conflicts of laws provisions, and any litigation with respect thereto shall be brought in the courts of said state. The Vendor shall comply with applicable federal, state, and local laws and regulations.

15. NOTICE: Any notice required or permitted to be given under this Agreement shall be in writing and personally delivered or sent by certified United States mail, postage prepaid, return receipt requested, to the party to whom the notice should be given at the address set forth below. Notice shall be deemed given when actually received or when refused. The parties agree to promptly notify each other in writing of any change of address.

For the Vendor:	**For the Customer:**
Name	Name
Title	Title
Address	Address
City, State, & Zip Code	City, State, & Zip Code

16. WAIVER: Failure by the Customer at any time to enforce the provisions of this Agreement shall not be construed as a waiver of any such provisions. Such failure to enforce shall not affect the validity of this Agreement or any part thereof or the right of the Customer to enforce any provision at any time in accordance with its terms.

17. CAPTIONS: The captions or headings in this Agreement are for convenience only, and in no way define, limit or describe the scope or intent of any provision or section of this Agreement.

18. SEVERABILITY: If any term or provision of this Agreement is prohibited by the laws of the State of Mississippi or declared invalid or void by a court of competent jurisdiction, the remainder of this Agreement shall be valid and enforceable to the fullest extent permitted by law.

19. THIRD PARTY ACTION NOTIFICATION: Vendor shall give Customer prompt notice in writing of any action or suit filed, and prompt notice of any claim made against Vendor by any entity that may result in litigation related in any way to this Agreement.

20. AUTHORITY TO CONTRACT: Vendor warrants that it is a validly organized business with valid authority to enter into this Agreement and that entry into and performance under this Agreement is not restricted or prohibited by any loan,

security, financing, contractual or other agreement of any kind, and notwithstanding any other provision of this Agreement to the contrary, that there are no existing legal proceedings, or prospective legal proceedings, either voluntary or otherwise, which may adversely affect its ability to perform its obligations under this Agreement.

21. RECORD RETENTION AND ACCESS TO RECORDS: The Vendor agrees that the Customer or any of its duly authorized representatives at any time during the term of this Agreement shall have unimpeded, prompt access to and the right to audit and examine any pertinent books, documents, papers, and records of the Vendor related to the Vendor's charges and performance under this Agreement. All records related to this Agreement shall be kept by the Vendor for a period of three (3) years after final payment under this Agreement and all pending matters are closed unless the Customer authorizes their earlier disposition. However, if any litigation, claim, negotiation, audit or other action arising out of or related in any way to this Agreement has been started before the expiration of the three (3) year period, the records shall be retained for one (1) year after all issues arising out of the action are finally resolved. The Vendor agrees to refund to the Customer any overpayment disclosed by any such audit arising out of or related in any way to this Agreement.

22. EXTRAORDINARY CIRCUMSTANCES: If either party is rendered unable, wholly or in part, by reason of strikes, accidents, acts of God, weather conditions or any other acts beyond its control and without its fault or negligence to comply with any obligations or performance required under this Agreement, then such party shall have the option to suspend its obligations or performance hereunder until the extraordinary performance circumstances are resolved. If the extraordinary performance circumstances are not resolved within a reasonable period of time, however, the non-defaulting party shall have the option, upon prior written notice, of terminating the Agreement.

23. TERMINATION: This Agreement may be terminated as follows: (a) Customer and Vendor mutually agree to the termination, or (b) If either party fails to comply with the terms and conditions of this Agreement and that breach continues for thirty (30) days after the defaulting party receives written notice from the other party, then the non-defaulting party has the right to terminate this Agreement. The non-defaulting party may also pursue any remedy available to it in law or in equity. Upon termination, all obligations of Customer to make payments required hereunder shall cease.

24. AVAILABILITY OF FUNDS: It is expressly understood and agreed that the obligation of the Customer to proceed under this Agreement is conditioned upon the appropriation of funds by the Mississippi State Legislature and the receipt of state and/or federal funds. If the funds anticipated for the continuing fulfillment of the agreement are, at any time, not forthcoming or insufficient, either through the failure of the federal government to provide funds or of the State of Mississippi to appropriate funds or the discontinuance or material alteration of the program under which funds were provided or if funds are not otherwise available to the Customer, the Customer shall have the right upon ten (10) working days written notice to the Vendor, to terminate this Agreement without damage, penalty, cost or expenses to the Customer of any kind whatsoever. The effective date of termination shall be as specified in the notice of termination.

25. MODIFICATION OR RENEGOTIATION: This Agreement may be modified, altered or changed only by written agreement signed by the parties hereto. The parties agree to renegotiate the Agreement if federal, state and/or the Customer's revisions of any applicable laws or regulations make changes in this Agreement necessary.

26. WARRANTIES: Vendor warrants that the equipment, when operated according to the manufacturer's specifications and documented instructions, shall perform the functions indicated by the specifications and documented literature. Vendor may be held liable for any damages caused by failure of the equipment to function according to specifications and documented literature published by the manufacturer of the equipment.

27. E-VERIFY COMPLIANCE: If applicable, the Vendor represents and warrants that it will ensure its compliance with the Mississippi Employment Protection Act of 2008, Section 71-11-1, *et seq.* of the Mississippi Code Annotated (Supp 2008), and will register and participate in the status verification system for all newly hired employees. The term "employee" as used herein means any person that is hired to perform work within the State of Mississippi. As used herein, "status verification system" means the Illegal Immigration Reform and Immigration Responsibility Act of 1996 that is operated by the United States Department of Homeland Security, also known as the E-Verify Program, or any other successor electronic verification system replacing the E-Verify Program. The Vendor agrees to maintain records of such compliance and, upon request of the State and

approval of the Social Security Administration or Department of Homeland Security, where required, to provide a copy of each such verification to the Customer. The Vendor further represents and warrants that any person assigned to perform services hereafter meets the employment eligibility requirements of all immigration laws of these warranties, the breach of which may subject the Vendor to the following: (1) termination of this Agreement and ineligibility for any state or public contract in Mississippi for up to three (3) years, with notice of such cancellation/termination being made public, or (2) the loss of any license, permit, certification or other document granted to the Vendor by an agency, department or governmental entity for the right to do business in Mississippi for up to one (1) year, or (3) both --in the event of such cancellation/termination, the Vendor would also be liable for any additional costs incurred by the Customer due to the contract cancellation or loss of license or permit.

28. HARD DRIVE SECURITY: Vendor must properly format the hard drive, deleting all information, or replace the hard drive with a new hard drive prior to storing or re-selling the equipment. The Customer may request to retain the hard drive for a nominal fee. Vendor will supply written notification to the Customer that all data has been made inaccessible. This notification must be provided with forty-five (45) days of the equipment being returned to the Vendor.

29. ENTIRE AGREEMENT: This Agreement constitutes the entire agreement of the parties with respect to the equipment, software or services described herein and supersedes and replaces any and all prior negotiations, understandings and agreements, written or oral, between the parties relating hereto. No terms, conditions, understandings, usages of the trade, course of dealings or agreements, not specifically set out in this Agreement or incorporated herein, shall be effective or relevant to modify, vary, explain or supplement this Agreement.

30. TRANSPARENCY: This Agreement, including any accompanying exhibits, attachments, and appendices, is subject to the "Mississippi Public Records Act of 1983," codified as Section 25-61-1 et seq., Mississippi Code Annotated and exceptions found in Section 79-23-1 of the Mississippi Code Annotated (1972, as amended). In addition, this Agreement is subject to provisions of the Mississippi Accountability and Transparency Act of 2008 (MATA), codified as Section 27-104-151 of the Mississippi Code Annotated (1972, as amended). Unless exempted from disclosure due to a court-issued protective order, this Agreement is required to be posted to the Department of Finance and Administration's independent agency contract website for public access. Prior to posting the Agreement to the website, any information identified by the Vendor as trade secrets, or other proprietary information including confidential vendor information, or any other information which is required confidential by state or federal law or outside the applicable freedom of information statutes will be redacted. A fully executed copy of this Agreement shall be posted to the State of Mississippi's accountability website at: http://www.transparency.mississippi.gov.

31. COMPLIANCE WITH LAWS: The Vendor understands that the Customer is an equal opportunity employer and therefore maintains a policy which prohibits unlawful discrimination based on race, color, creed, sex, age, national origin, physical handicap, disability, genetic information, or any other consideration made unlawful by federal, state, or local laws. All such discrimination is unlawful and the Vendor agrees during the term of the Agreement that the Vendor will strictly adhere to this policy in its employment practices and provision of services. The Vendor shall comply with, and all activities under this Agreement shall be subject to, all applicable federal, State of Mississippi, and local laws and regulations, as now existing and as may be amended or modified.

For the faithful performance of the terms of this Agreement, the parties have caused this Agreement to be executed by their undersigned representatives.

Witness my signature this the _____day of _____, 20__.

Vendor: **RJ Young**

By: _____
Authorized Signature

Printed Name: _____

Title: _____

Witness my signature this the _____day of _____, 20__.

Customer: **CITY OF HATTIESBURG**

By: X_____
Authorized Signature

Printed Name: X_____

Title: X_____

Revised Date: February 2017

EXHIBIT A
RENTAL AGREEMENT
FOR USE BY
MISSISSIPPI Agencies AND VENDORS
(Applicable to Equipment Rental Transactions)

The following, when signed by the Customer and the Vendor shall be considered to be a part of the Rental Agreement between the parties.

State Contract Number: **#8200038140**

Vendor Company Name: **RJ Young**

Customer Agency Name: **City of Hattiesburg**

Bill to Address: **P.O. Box 1898 Hattiesburg, Mississippi 39401**

Ship to Address: **POLICE / FIRE ACADEMY ; 53 ACADEMY DRIVE, HATTIESBURG, MS. 39401**

Description of Equipment, Software, or Services	Price
Canon IR C5535i-II Digital Copy System	**$198.00* per month**
With Inner Finisher H1 , Cabinet, Copy Tray J2 and Fax Board AS1	

***Monthly rental price includes parts, labor and toner for 5000 black copies per month.**

Color copies billed in arrears at $.0507 per copy.

Billing overages reconciled quarterly.

Delivery Schedule and Installation Date: As soon as possible

Rental Term: **48 Months**
Start Date:
End Date:

Modifications: Per Mississippi State Contract

Vendor Signature

X
Customer Signature

Revised Date: February 2017

RENTAL AGREEMENT
FOR USE BY MISSISSIPPI AGENCIES & GOVERNING AUTHORITIES
AND VENDORS
(applicable to equipment rental transactions)

This Rental Agreement (hereinafter referred to as Agreement) is entered into by and between

CITY OF HATTIESBURG
(hereinafter referred to as Customer), and **RJ Young** (hereinafter referred to as Vendor). This Agreement becomes effective upon signature by Customer and Vendor, and shall take precedence over all agreements and understandings between the parties. Vendor, by its acceptance hereof, agrees to rent to Customer, and Customer, by its acceptance hereof, agrees to rent from Vendor, the equipment, including applicable software and services to render it continually operational, listed in Exhibit A, which is attached hereto and incorporated herein.

1. CUSTOMER ACCOUNT ESTABLISHMENT:

A. A separate Vendor Customer Number will be required for each specific customer/installation location.

B. The Customer is identified as the entity on the first line of the "bill-to" address. All invoices and notices of changes will be sent to the "bill-to" address in accordance with Paragraph 8 herein.

C. Ship-to and/or Installed-at address is the location to which the initial shipment of equipment/supplies will be made and the address to which service representatives will respond. Subsequent shipments of supplies for installed equipment will also be delivered to the "installed-at" address unless otherwise requested.

D. Unless creditworthiness for this Customer Number has been previously established by Vendor, Vendor's Credit Department may conduct a credit investigation for this Agreement. Notwithstanding delivery of equipment, Vendor may revoke this Agreement by written notice to the Customer if credit approval is denied within thirty (30) days after the date this Agreement is accepted for Vendor by an authorized representative.

2. EQUIPMENT SELECTION, PRICES, AND AGREEMENT: The Customer has selected and Vendor agrees to provide the equipment, including applicable software and services to render it continually operational, identified on Exhibit A attached to this Agreement. The specific prices, inclusive of applicable transportation charges, are as set forth on the attached Exhibit A. The parties understand and agree that the Customer is exempt from the payment of taxes.

3. SHIPPING AND TRANSPORTATION: Vendor agrees to pay all non-priority, ground shipping, transportation, rigging and drayage charges for the equipment from the equipment's place of manufacture to the installation address of the equipment as specified under this Agreement. If any form of express shipping method is requested, it will be paid for by Customer.

4. RISK OF LOSS OR DAMAGE TO EQUIPMENT: While in transit, Vendor shall assume and bear the entire risk of loss and damage to the equipment from any cause whatsoever. If, during the period the equipment is in Customer's possession, due to gross negligence of the customer, the equipment is lost or damaged, then, the customer shall bear the cost of replacing or repairing said equipment.

5. DELIVERY, INSTALLATION, ACCEPTANCE, AND RELOCATION:

A. DELIVERY: Vendor shall deliver the equipment to the location specified by Customer and pursuant to the delivery schedule agreed upon by the parties. If, through no fault of the Customer, Vendor is unable to deliver the equipment or software, the prices, terms and conditions will remain unchanged until delivery is made by Vendor. If, however, Vendor does not deliver the equipment or software within ten (10) working days of the delivery due date, Customer shall have the right to terminate the order without penalty, cost or expense to Customer of any kind whatsoever.

B. INSTALLATION SITE: At the time of delivery and during the period Vendor is responsible for maintenance of the equipment, the equipment installation site must conform to Vendor's published space, electrical and environmental requirements; and the Customer agrees to provide, at no charge, reasonable access to the equipment and to a telephone for local or toll free calls.

C. INSTALLATION DATE: The installation date of the equipment shall be that date as is agreed upon by the parties, if Vendor is responsible for installing the equipment.

D. ACCEPTANCE: Unless otherwise agreed to by the parties, Vendor agrees that Customer shall have ten (10) working days from date of delivery and installation, to inspect, evaluate and test the equipment to confirm that it is in good working order.

E. RELOCATION: Customer may transfer equipment to a new location by notifying Vendor in writing of the transfer at least thirty (30) calendar days before the move is made. If Vendor is responsible for maintenance of the equipment, this notice will enable Vendor to provide technical assistance in the relocation efforts, if needed, as well as to update Vendor's records as to machine location. There will be no cessation of rental charges during the period of any such transfer. The Vendor's cost of moving and reinstalling equipment from one location to another is not included in this Agreement, and Customer agrees to pay Vendor, after receipt of invoice of Vendor's charges with respect to such moving of equipment, which will be billed to Customer in accordance with Vendor's standard practice then in effect for commercial users of similar equipment or software and payment remitted in accordance with Paragraph 8 herein.

6. RENTAL TERM: The rental term for each item of equipment shall be that as stated in the attached Exhibit A. If the Customer desires to continue renting the equipment at the expiration of the original rental agreement, the Customer must enter into a new rental agreement which shall be separate from this Agreement. There will be no automatic renewals allowed. There shall be no option to purchase.

7. OWNERSHIP: Unless the Customer has obtained title to the equipment, title to the equipment shall be and remain vested at all times in Vendor or its assignee and nothing in this Agreement shall give or convey to Customer any right, title or interest therein, unless purchased by Customer. Nameplates, stencils or other indicia of Vendor's ownership affixed or to be affixed to the equipment shall not be removed or obliterated by Customer.

8. PAYMENTS:

A. INVOICING AND PAYMENTS: The charges for the equipment, software or services covered by this Agreement are specified in the attached Exhibit A. Charges for any partial month for any item of equipment shall be prorated based on a thirty (30) day month. Vendor shall submit an invoice with the appropriate documentation to Customer.

1. E-PAYMENT: The Vendor agrees to accept all payments in United States currency via the State of Mississippi's electronic payment and remittance vehicle. The Customer agrees to make payment in accordance with Mississippi law on "Timely Payments for Purchases by Public Bodies", Section 31-7-301, *et seq.* of the 1972 Mississippi Code Annotated, as amended, which generally provides for payment of undisputed amounts by the agency within forty-five (45) days of receipt of the invoice.

2. PAYMODE: Payments by state agencies using Mississippi's Accountability System for Government Information and Collaboration (MAGIC) shall be made and remittance information provided electronically as directed by the State. The State, may at its sole discretion, require the Vendor to submit invoices and supporting documentation electronically at any time during the term of this Agreement. These payments shall be deposited into the bank account of the Vendor's choice. The Vendor understands and agrees that the State is exempt from the payment of taxes. All payments shall be in United States currency.

B. METER READINGS: If applicable, the Customer shall provide accurate and timely meter readings at the end

of each applicable billing period on the forms or other alternative means specified by Vendor. Vendor shall have the right, upon reasonable prior notice to Customer, and during Customer's regular business hours, to inspect the equipment and to monitor the meter readings. If Customer meter readings are not received in the time to be agreed upon by the parties, the meter readings may be obtained electronically or by other means or may be estimated by Vendor subject to reconciliation when the correct meter reading is received by Vendor.

C. COPY CREDITS: If applicable, if a copier is being rented, the Customer will receive one (1) copy credit for each copy presented to Vendor which, in the Customer's opinion, is unusable and also for each copy which was produced during servicing of the equipment. Copy credits will be issued only if Vendor is responsible for providing equipment services or maintenance services (except time and materials maintenance). Copy credits will be reflected on the invoice as a reduction in the total copy volume, except for run length plans which will be credited at a specific copy credit rate as shown on the applicable price list.

9. USE OF EQUIPMENT: Customer shall operate the equipment according to the manufacturer's specifications and documented instructions. Customer agrees not to employ or use additional attachments, features or devices on the equipment or make changes or alterations to the equipment covered hereby without the prior written consent of Vendor in each case, which consent shall not be unreasonably withheld.

10. MAINTENANCE SERVICES, EXCLUSIONS, AND REMEDIES:

A. SERVICES: If Vendor is responsible for providing equipment services, maintenance services (except for time and materials), or warranty services: (1) Vendor shall install and maintain the equipment and make all necessary adjustments and repairs to keep the equipment in good working order. (2) Parts required for repair may be used or reprocessed in accordance with Vendor's specifications and replaced parts are the property of Vendor, unless otherwise specifically provided on the price lists. (3) Services will be provided during Customer's usual business hours. (4) If applicable, Customer will permit Vendor to install, at no cost to Customer, all retrofits designated by Vendor as mandatory or which are designed to insure accuracy of meters.

B. EXCLUSIONS: The following is not within the scope of services: (1) Provision and installation of optional retrofits. (2) Services connected with equipment relocation. (3) Installation/removal of accessories, attachments or other devices. (4) Exterior painting or refinishing of equipment. (5) Maintenance, installation or removal of equipment or devices not provided by Vendor. (6) Performance of normal operator functions as described in applicable Vendor operator manuals. (7) Performance of services necessitated by accident; power failure; unauthorized alteration of equipment or software; tampering; service by someone other than Vendor; causes other than ordinary use; interconnection of equipment by electrical, or electronic or mechanical means with noncompatible equipment, or failure to use operating system software. If Vendor provides, at the request of the Customer, any of the services noted above, the Customer may be billed by Vendor at a rate not to exceed the Master State Prices Agreement between the Vendor and the State of Mississippi, or in the absence of such agreement at the then current time and materials rates.

C. REMEDIES: If during the period in which Vendor is providing maintenance services, Vendor is unable to maintain the equipment in good working order, Vendor will, at no additional charge, provide either an identical replacement or another product that provides equal or greater capabilities.

11. HOLD HARMLESS: To the fullest extent allowed by law, Vendor shall indemnify, defend, save and hold harmless, protect, and exonerate the Customer and the State of Mississippi, its Commissioners, Board Members, officers, employees, agents, and representatives from and against all claims, demands, liabilities, suits, actions, damages, losses, and costs of every kind and nature whatsoever, including, without limitation, court costs, investigative fees and expenses, and attorneys' fees, arising out of or caused by Vendor and/or its partners, principals, agents, employees, and/or subcontractors in the performance of or failure to perform this Agreement. In the Customer's sole discretion, Vendor may be allowed to control the defense of any such claim, suit, etc. In the event Vendor defends said claim, suit, etc., Vendor shall use legal counsel acceptable to the Customer; Vendor shall be solely liable for all reasonable costs and/or expenses associated with such defense and the Customer shall be entitled to participate in said defense. Vendor shall not settle any claim, suit, etc., without the Customer's concurrence,

which the Customer shall not unreasonably withhold.

12. ALTERATIONS, ATTACHMENTS, AND SUPPLIES:

A. If Customer makes an alteration, attaches a device or utilizes a supply item that increases the cost of services, Vendor will either propose an additional service charge or request that the equipment be returned to its standard configuration or that use of the supply item be discontinued. If, within five (5) days of such proposal or request, Customer does not remedy the problem or agree in writing to do so within a reasonable amount of time, Vendor shall have the right to terminate this Agreement as provided herein. If Vendor believes that an alteration, attachment or supply item affects the safety of Vendor personnel or equipment users, Vendor shall notify Customer of the problem and may withhold maintenance until the problem is remedied.

B. Unless Customer has obtained title to the equipment free and clear of any Vendor security interest, Customer may not remove any ownership identification tags on the equipment or allow the equipment to become fixtures to real property.

13. ASSIGNMENT: The Vendor shall not assign, subcontract or otherwise transfer in whole or in part, its right or obligations under this Agreement without prior written consent of the Customer. Any attempted assignment or transfer without said consent shall be void and of no effect.

14. GOVERNING LAW: This Agreement shall be governed by and construed in accordance with the laws of the State of Mississippi, excluding its conflicts of laws provisions, and any litigation with respect thereto shall be brought in the courts of said state. The Vendor shall comply with applicable federal, state, and local laws and regulations.

15. NOTICE: Any notice required or permitted to be given under this Agreement shall be in writing and personally delivered or sent by certified United States mail, postage prepaid, return receipt requested, to the party to whom the notice should be given at the address set forth below. Notice shall be deemed given when actually received or when refused. The parties agree to promptly notify each other in writing of any change of address.

For the Vendor:	**For the Customer:**
Name	Name
Title	Title
Address	Address
City, State, & Zip Code	City, State, & Zip Code

16. WAIVER: Failure by the Customer at any time to enforce the provisions of this Agreement shall not be construed as a waiver of any such provisions. Such failure to enforce shall not affect the validity of this Agreement or any part thereof or the right of the Customer to enforce any provision at any time in accordance with its terms.

17. CAPTIONS: The captions or headings in this Agreement are for convenience only, and in no way define, limit or describe the scope or intent of any provision or section of this Agreement.

18. SEVERABILITY: If any term or provision of this Agreement is prohibited by the laws of the State of Mississippi or declared invalid or void by a court of competent jurisdiction, the remainder of this Agreement shall be valid and enforceable to the fullest extent permitted by law.

19. THIRD PARTY ACTION NOTIFICATION: Vendor shall give Customer prompt notice in writing of any action or suit filed, and prompt notice of any claim made against Vendor by any entity that may result in litigation related in any way to this Agreement.

20. AUTHORITY TO CONTRACT: Vendor warrants that it is a validly organized business with valid authority to enter into this Agreement and that entry into and performance under this Agreement is not restricted or prohibited by any loan,

security, financing, contractual or other agreement of any kind, and notwithstanding any other provision of this Agreement to the contrary, that there are no existing legal proceedings, or prospective legal proceedings, either voluntary or otherwise, which may adversely affect its ability to perform its obligations under this Agreement.

21. RECORD RETENTION AND ACCESS TO RECORDS: The Vendor agrees that the Customer or any of its duly authorized representatives at any time during the term of this Agreement shall have unimpeded, prompt access to and the right to audit and examine any pertinent books, documents, papers, and records of the Vendor related to the Vendor's charges and performance under this Agreement. All records related to this Agreement shall be kept by the Vendor for a period of three (3) years after final payment under this Agreement and all pending matters are closed unless the Customer authorizes their earlier disposition. However, if any litigation, claim, negotiation, audit or other action arising out of or related in any way to this Agreement has been started before the expiration of the three (3) year period, the records shall be retained for one (1) year after all issues arising out of the action are finally resolved. The Vendor agrees to refund to the Customer any overpayment disclosed by any such audit arising out of or related in any way to this Agreement.

22. EXTRAORDINARY CIRCUMSTANCES: If either party is rendered unable, wholly or in part, by reason of strikes, accidents, acts of God, weather conditions or any other acts beyond its control and without its fault or negligence to comply with any obligations or performance required under this Agreement, then such party shall have the option to suspend its obligations or performance hereunder until the extraordinary performance circumstances are resolved. If the extraordinary performance circumstances are not resolved within a reasonable period of time, however, the non-defaulting party shall have the option, upon prior written notice, of terminating the Agreement.

23. TERMINATION: This Agreement may be terminated as follows: (a) Customer and Vendor mutually agree to the termination, or (b) If either party fails to comply with the terms and conditions of this Agreement and that breach continues for thirty (30) days after the defaulting party receives written notice from the other party, then the non-defaulting party has the right to terminate this Agreement. The non-defaulting party may also pursue any remedy available to it in law or in equity. Upon termination, all obligations of Customer to make payments required hereunder shall cease.

24. AVAILABILITY OF FUNDS: It is expressly understood and agreed that the obligation of the Customer to proceed under this Agreement is conditioned upon the appropriation of funds by the Mississippi State Legislature and the receipt of state and/or federal funds. If the funds anticipated for the continuing fulfillment of the agreement are, at any time, not forthcoming or insufficient, either through the failure of the federal government to provide funds or of the State of Mississippi to appropriate funds or the discontinuance or material alteration of the program under which funds were provided or if funds are not otherwise available to the Customer, the Customer shall have the right upon ten (10) working days written notice to the Vendor, to terminate this Agreement without damage, penalty, cost or expenses to the Customer of any kind whatsoever. The effective date of termination shall be as specified in the notice of termination.

25. MODIFICATION OR RENEGOTIATION: This Agreement may be modified, altered or changed only by written agreement signed by the parties hereto. The parties agree to renegotiate the Agreement if federal, state and/or the Customer's revisions of any applicable laws or regulations make changes in this Agreement necessary.

26. WARRANTIES: Vendor warrants that the equipment, when operated according to the manufacturer's specifications and documented instructions, shall perform the functions indicated by the specifications and documented literature. Vendor may be held liable for any damages caused by failure of the equipment to function according to specifications and documented literature published by the manufacturer of the equipment.

27. E-VERIFY COMPLIANCE: If applicable, the Vendor represents and warrants that it will ensure its compliance with the Mississippi Employment Protection Act of 2008, Section 71-11-1, *et seq.* of the Mississippi Code Annotated (Supp 2008), and will register and participate in the status verification system for all newly hired employees. The term "employee" as used herein means any person that is hired to perform work within the State of Mississippi. As used herein, "status verification system" means the Illegal Immigration Reform and Immigration Responsibility Act of 1996 that is operated by the United States Department of Homeland Security, also known as the E-Verify Program, or any other successor electronic verification system replacing the E-Verify Program. The Vendor agrees to maintain records of such compliance and, upon request of the State and

approval of the Social Security Administration or Department of Homeland Security, where required, to provide a copy of each such verification to the Customer. The Vendor further represents and warrants that any person assigned to perform services hereafter meets the employment eligibility requirements of all immigration laws of these warranties, the breach of which may subject the Vendor to the following: (1) termination of this Agreement and ineligibility for any state or public contract in Mississippi for up to three (3) years, with notice of such cancellation/termination being made public, or (2) the loss of any license, permit, certification or other document granted to the Vendor by an agency, department or governmental entity for the right to do business in Mississippi for up to one (1) year, or (3) both --in the event of such cancellation/termination, the Vendor would also be liable for any additional costs incurred by the Customer due to the contract cancellation or loss of license or permit.

28. HARD DRIVE SECURITY: Vendor must properly format the hard drive, deleting all information, or replace the hard drive with a new hard drive prior to storing or re-selling the equipment. The Customer may request to retain the hard drive for a nominal fee. Vendor will supply written notification to the Customer that all data has been made inaccessible. This notification must be provided with forty-five (45) days of the equipment being returned to the Vendor.

29. ENTIRE AGREEMENT: This Agreement constitutes the entire agreement of the parties with respect to the equipment, software or services described herein and supersedes and replaces any and all prior negotiations, understandings and agreements, written or oral, between the parties relating hereto. No terms, conditions, understandings, usages of the trade, course of dealings or agreements, not specifically set out in this Agreement or incorporated herein, shall be effective or relevant to modify, vary, explain or supplement this Agreement.

30. TRANSPARENCY: This Agreement, including any accompanying exhibits, attachments, and appendices, is subject to the "Mississippi Public Records Act of 1983," codified as Section 25-61-1 et seq., Mississippi Code Annotated and exceptions found in Section 79-23-1 of the Mississippi Code Annotated (1972, as amended). In addition, this Agreement is subject to provisions of the Mississippi Accountability and Transparency Act of 2008 (MATA), codified as Section 27-104-151 of the Mississippi Code Annotated (1972, as amended). Unless exempted from disclosure due to a court-issued protective order, this Agreement is required to be posted to the Department of Finance and Administration's independent agency contract website for public access. Prior to posting the Agreement to the website, any information identified by the Vendor as trade secrets, or other proprietary information including confidential vendor information, or any other information which is required confidential by state or federal law or outside the applicable freedom of information statutes will be redacted. A fully executed copy of this Agreement shall be posted to the State of Mississippi's accountability website at: http://www.transparency.mississippi.gov.

31. COMPLIANCE WITH LAWS: The Vendor understands that the Customer is an equal opportunity employer and therefore maintains a policy which prohibits unlawful discrimination based on race, color, creed, sex, age, national origin, physical handicap, disability, genetic information, or any other consideration made unlawful by federal, state, or local laws. All such discrimination is unlawful and the Vendor agrees during the term of the Agreement that the Vendor will strictly adhere to this policy in its employment practices and provision of services. The Vendor shall comply with, and all activities under this Agreement shall be subject to, all applicable federal, State of Mississippi, and local laws and regulations, as now existing and as may be amended or modified.

For the faithful performance of the terms of this Agreement, the parties have caused this Agreement to be executed by their undersigned representatives.

Witness my signature this the _____day of _____, 20__.

Vendor: **RJ Young**

By: _____
Authorized Signature

Printed Name: _____

Title: _____

Witness my signature this the 7th day of August, 2018

Customer: **CITY OF HATTIESBURG**

By: X _____
Authorized Signature

Printed Name: X Toby Barker

Title: X Mayor

Revised Date: February 2017

EXHIBIT A
RENTAL AGREEMENT
FOR USE BY
MISSISSIPPI Agencies AND VENDORS
(Applicable to Equipment Rental Transactions)

The following, when signed by the Customer and the Vendor shall be considered to be a part of the Rental Agreement between the parties.

State Contract Number: **#8200038140**

Vendor Company Name: **RJ Young**

Customer Agency Name: **City of Hattiesburg**

Bill to Address: **P.O. Box 1898 Hattiesburg, Mississippi 39401**

Ship to Address: **POLICE / FIRE ACADEMY ; 53 ACADEMY DRIVE, HATTIESBURG, MS. 39401**

Description of Equipment, Software, or Services	Price
Canon IR C5535i-II Digital Copy System	**$198.00* per month**
With Inner Finisher H1 , Cabinet, Copy Tray J2 and Fax Board AS1	

***Monthly rental price includes parts, labor and toner for 5000 black copies per month.**

Color copies billed in arrears at $.0507 per copy.

Billing overages reconciled quarterly.

Delivery Schedule and Installation Date: As soon as possible

Rental Term: **48 Months**
Start Date:
End Date:

Modifications: Per Mississippi State Contract

Vendor Signature

X Customer Signature

RJYoung

BUDDY WADE
d: 601-705-1205

CANON STATE CONTRACT: 8200038140

CURRENT EXPENSE: CANON IRC5235 WITH SERVICE AT $ 236.00 PER MONTH

PROPOSED SOLUTION: **CANON IR C5535i-II DIGITAL COLOR COPIER**
With AUTOMATIC DOCUMENT FEEDER
2 ADJUSTABLE PAPER TRAYS
UP TO 11X17 COPYING
INNER FINISHER WITH STAPLING
PRINT / SCAN / FAX

48 MONTH STATE RENTAL PRICE: $198.00* PER MONTH

RENTAL PRICE INCLUDES SERVICE CONTRACT:
Includes all parts, labor and TONER for:
5000 black copies per month (overage at $.0092)
Color copies billed in arrears at $.0507 per copy
Reconciled quarterly

SAVINGS PER MONTH OF $38.00 OVER CURRENT SPEND

PRICES ARE LOCKED IN FOR THE TERM OF THE AGREEMENT.

PLEASE FEEL FREE TO GIVE ME A CALL IF YOU NEED ADDITIONAL INFORMATION.

BUDDY WADE
601-408-1899

Buddy Wade
7/10/18

Your productivity is our mission.

City of Hattiesburg, MS

200 Forrest St.
P.O. Box 1898
Hattiesburg, MS 39401

Master

File Number: 2018-670

File ID:	2018-670	**Type:**	Regular Agenda Item	**Status:**	Approved
Version:	1	**Reference:**		**In Control:**	City Council
Requester:				**File Created:**	08/01/2018
Brief Title:	Copier Rental Agreement with RJ Young for a copier in the City Clerk's Office.			**Final Action:**	
				Minute Book Number:	MB 2018-196

Title:

Authorize Mayor to execute Copier Rental Agreement between the City of Hattiesburg and RJ Young for copier located on the 2nd floor in City Hall at the City Clerk's Office at a cost of $204.00 per month.

Notes:			
		Agenda Date:	08/07/2018
Indexes:		**Agenda Number:**	VII.-3
Sponsors:		**Enactment Date:**	
Attachments:	Copier rental agreement-Clerk'sOffice., Executed - Copier rental agreement-Clerk'sOffice	**Enactment Number:**	
Contact:		**Meeting Date:**	
Drafter:		**Effective Date:**	

History of Legislative File

Version:	Acting Body:	Date:	Action:	Sent To:	Due Date:	Return Date:	Result:
1	City Council	08/07/2018	Approved on the Routine Agenda				
	Action Text:	Approved on the Routine Agenda					

Text of Legislative File 2018-670

Title

Authorize Mayor to execute Copier Rental Agreement between the City of Hattiesburg and RJ Young for copier located on the 2nd floor in City Hall at the City Clerk's Office at a cost of $204.00 per month.

Summary

Copier rental agreement with RJ Young for a copier in the City Clerk's Office.

Budget Information

Expenditure Type

Purchasing Item

Publication Information

RENTAL AGREEMENT
FOR USE BY MISSISSIPPI AGENCIES & GOVERNING AUTHORITIES AND VENDORS
(applicable to equipment rental transactions)

This Rental Agreement (hereinafter referred to as Agreement) is entered into by and between

CITY OF HATTIESBURG
(hereinafter referred to as Customer), and **RJ Young** (hereinafter referred to as Vendor). This Agreement becomes effective upon signature by Customer and Vendor, and shall take precedence over all agreements and understandings between the parties. Vendor, by its acceptance hereof, agrees to rent to Customer, and Customer, by its acceptance hereof, agrees to rent from Vendor, the equipment, including applicable software and services to render it continually operational, listed in Exhibit A, which is attached hereto and incorporated herein.

1. CUSTOMER ACCOUNT ESTABLISHMENT:

A. A separate Vendor Customer Number will be required for each specific customer/installation location.

B. The Customer is identified as the entity on the first line of the "bill-to" address. All invoices and notices of changes will be sent to the "bill-to" address in accordance with Paragraph 8 herein.

C. Ship-to and/or Installed-at address is the location to which the initial shipment of equipment/supplies will be made and the address to which service representatives will respond. Subsequent shipments of supplies for installed equipment will also be delivered to the "installed-at" address unless otherwise requested.

D. Unless creditworthiness for this Customer Number has been previously established by Vendor, Vendor's Credit Department may conduct a credit investigation for this Agreement. Notwithstanding delivery of equipment, Vendor may revoke this Agreement by written notice to the Customer if credit approval is denied within thirty (30) days after the date this Agreement is accepted for Vendor by an authorized representative.

2. EQUIPMENT SELECTION, PRICES, AND AGREEMENT: The Customer has selected and Vendor agrees to provide the equipment, including applicable software and services to render it continually operational, identified on Exhibit A attached to this Agreement. The specific prices, inclusive of applicable transportation charges, are as set forth on the attached Exhibit A. The parties understand and agree that the Customer is exempt from the payment of taxes.

3. SHIPPING AND TRANSPORTATION: Vendor agrees to pay all non-priority, ground shipping, transportation, rigging and drayage charges for the equipment from the equipment's place of manufacture to the installation address of the equipment as specified under this Agreement. If any form of express shipping method is requested, it will be paid for by Customer.

4. RISK OF LOSS OR DAMAGE TO EQUIPMENT: While in transit, Vendor shall assume and bear the entire risk of loss and damage to the equipment from any cause whatsoever. If, during the period the equipment is in Customer's possession, due to gross negligence of the customer, the equipment is lost or damaged, then, the customer shall bear the cost of replacing or repairing said equipment.

5. DELIVERY, INSTALLATION, ACCEPTANCE, AND RELOCATION:

A. DELIVERY: Vendor shall deliver the equipment to the location specified by Customer and pursuant to the delivery schedule agreed upon by the parties. If, through no fault of the Customer, Vendor is unable to deliver the equipment or software, the prices, terms and conditions will remain unchanged until delivery is made by Vendor. If, however, Vendor does not deliver the equipment or software within ten (10) working days of the delivery due date, Customer shall have the right to terminate the order without penalty, cost or expense to Customer of any kind whatsoever.

B. INSTALLATION SITE: At the time of delivery and during the period Vendor is responsible for maintenance of the equipment, the equipment installation site must conform to Vendor's published space, electrical and environmental requirements; and the Customer agrees to provide, at no charge, reasonable access to the equipment and to a telephone for local or toll free calls.

C. INSTALLATION DATE: The installation date of the equipment shall be that date as is agreed upon by the parties, if Vendor is responsible for installing the equipment.

D. ACCEPTANCE: Unless otherwise agreed to by the parties, Vendor agrees that Customer shall have ten (10) working days from date of delivery and installation, to inspect, evaluate and test the equipment to confirm that it is in good working order.

E. RELOCATION: Customer may transfer equipment to a new location by notifying Vendor in writing of the transfer at least thirty (30) calendar days before the move is made. If Vendor is responsible for maintenance of the equipment, this notice will enable Vendor to provide technical assistance in the relocation efforts, if needed, as well as to update Vendor's records as to machine location. There will be no cessation of rental charges during the period of any such transfer. The Vendor's cost of moving and reinstalling equipment from one location to another is not included in this Agreement, and Customer agrees to pay Vendor, after receipt of invoice of Vendor's charges with respect to such moving of equipment, which will be billed to Customer in accordance with Vendor's standard practice then in effect for commercial users of similar equipment or software and payment remitted in accordance with Paragraph 8 herein.

6. RENTAL TERM: The rental term for each item of equipment shall be that as stated in the attached Exhibit A. If the Customer desires to continue renting the equipment at the expiration of the original rental agreement, the Customer must enter into a new rental agreement which shall be separate from this Agreement. There will be no automatic renewals allowed. There shall be no option to purchase.

7. OWNERSHIP: Unless the Customer has obtained title to the equipment, title to the equipment shall be and remain vested at all times in Vendor or its assignee and nothing in this Agreement shall give or convey to Customer any right, title or interest therein, unless purchased by Customer. Nameplates, stencils or other indicia of Vendor's ownership affixed or to be affixed to the equipment shall not be removed or obliterated by Customer.

8. PAYMENTS:

A. INVOICING AND PAYMENTS: The charges for the equipment, software or services covered by this Agreement are specified in the attached Exhibit A. Charges for any partial month for any item of equipment shall be prorated based on a thirty (30) day month. Vendor shall submit an invoice with the appropriate documentation to Customer.

1. E-PAYMENT: The Vendor agrees to accept all payments in United States currency via the State of Mississippi's electronic payment and remittance vehicle. The Customer agrees to make payment in accordance with Mississippi law on "Timely Payments for Purchases by Public Bodies", Section 31-7-301, *et seq*. of the 1972 Mississippi Code Annotated, as amended, which generally provides for payment of undisputed amounts by the agency within forty-five (45) days of receipt of the invoice.

2. PAYMODE: Payments by state agencies using Mississippi's Accountability System for Government Information and Collaboration (MAGIC) shall be made and remittance information provided electronically as directed by the State. The State, may at its sole discretion, require the Vendor to submit invoices and supporting documentation electronically at any time during the term of this Agreement. These payments shall be deposited into the bank account of the Vendor's choice. The Vendor understands and agrees that the State is exempt from the payment of taxes. All payments shall be in United States currency.

B. METER READINGS: If applicable, the Customer shall provide accurate and timely meter readings at the end

of each applicable billing period on the forms or other alternative means specified by Vendor. Vendor shall have the right, upon reasonable prior notice to Customer, and during Customer's regular business hours, to inspect the equipment and to monitor the meter readings. If Customer meter readings are not received in the time to be agreed upon by the parties, the meter readings may be obtained electronically or by other means or may be estimated by Vendor subject to reconciliation when the correct meter reading is received by Vendor.

C. COPY CREDITS: If applicable, if a copier is being rented, the Customer will receive one (1) copy credit for each copy presented to Vendor which, in the Customer's opinion, is unusable and also for each copy which was produced during servicing of the equipment. Copy credits will be issued only if Vendor is responsible for providing equipment services or maintenance services (except time and materials maintenance). Copy credits will be reflected on the invoice as a reduction in the total copy volume, except for run length plans which will be credited at a specific copy credit rate as shown on the applicable price list.

9. USE OF EQUIPMENT: Customer shall operate the equipment according to the manufacturer's specifications and documented instructions. Customer agrees not to employ or use additional attachments, features or devices on the equipment or make changes or alterations to the equipment covered hereby without the prior written consent of Vendor in each case, which consent shall not be unreasonably withheld.

10. MAINTENANCE SERVICES, EXCLUSIONS, AND REMEDIES:

A. SERVICES: If Vendor is responsible for providing equipment services, maintenance services (except for time and materials), or warranty services: (1) Vendor shall install and maintain the equipment and make all necessary adjustments and repairs to keep the equipment in good working order. (2) Parts required for repair may be used or reprocessed in accordance with Vendor's specifications and replaced parts are the property of Vendor, unless otherwise specifically provided on the price lists. (3) Services will be provided during Customer's usual business hours. (4) If applicable, Customer will permit Vendor to install, at no cost to Customer, all retrofits designated by Vendor as mandatory or which are designed to insure accuracy of meters.

B. EXCLUSIONS: The following is not within the scope of services: (1) Provision and installation of optional retrofits. (2) Services connected with equipment relocation. (3) Installation/removal of accessories, attachments or other devices. (4) Exterior painting or refinishing of equipment. (5) Maintenance, installation or removal of equipment or devices not provided by Vendor. (6) Performance of normal operator functions as described in applicable Vendor operator manuals. (7) Performance of services necessitated by accident; power failure; unauthorized alteration of equipment or software; tampering; service by someone other than Vendor; causes other than ordinary use; interconnection of equipment by electrical, or electronic or mechanical means with noncompatible equipment, or failure to use operating system software. If Vendor provides, at the request of the Customer, any of the services noted above, the Customer may be billed by Vendor at a rate not to exceed the Master State Prices Agreement between the Vendor and the State of Mississippi, or in the absence of such agreement at the then current time and materials rates.

C. REMEDIES: If during the period in which Vendor is providing maintenance services, Vendor is unable to maintain the equipment in good working order, Vendor will, at no additional charge, provide either an identical replacement or another product that provides equal or greater capabilities.

11. HOLD HARMLESS: To the fullest extent allowed by law, Vendor shall indemnify, defend, save and hold harmless, protect, and exonerate the Customer and the State of Mississippi, its Commissioners, Board Members, officers, employees, agents, and representatives from and against all claims, demands, liabilities, suits, actions, damages, losses, and costs of every kind and nature whatsoever, including, without limitation, court costs, investigative fees and expenses, and attorneys' fees, arising out of or caused by Vendor and/or its partners, principals, agents, employees, and/or subcontractors in the performance of or failure to perform this Agreement. In the Customer's sole discretion, Vendor may be allowed to control the defense of any such claim, suit, etc. In the event Vendor defends said claim, suit, etc., Vendor shall use legal counsel acceptable to the Customer; Vendor shall be solely liable for all reasonable costs and/or expenses associated with such defense and the Customer shall be entitled to participate in said defense. Vendor shall not settle any claim, suit, etc., without the Customer's concurrence,

which the Customer shall not unreasonably withhold.

12. ALTERATIONS, ATTACHMENTS, AND SUPPLIES:

A. If Customer makes an alteration, attaches a device or utilizes a supply item that increases the cost of services, Vendor will either propose an additional service charge or request that the equipment be returned to its standard configuration or that use of the supply item be discontinued. If, within five (5) days of such proposal or request, Customer does not remedy the problem or agree in writing to do so within a reasonable amount of time, Vendor shall have the right to terminate this Agreement as provided herein. If Vendor believes that an alteration, attachment or supply item affects the safety of Vendor personnel or equipment users, Vendor shall notify Customer of the problem and may withhold maintenance until the problem is remedied.

B. Unless Customer has obtained title to the equipment free and clear of any Vendor security interest, Customer may not remove any ownership identification tags on the equipment or allow the equipment to become fixtures to real property.

13. ASSIGNMENT: The Vendor shall not assign, subcontract or otherwise transfer in whole or in part, its right or obligations under this Agreement without prior written consent of the Customer. Any attempted assignment or transfer without said consent shall be void and of no effect.

14. GOVERNING LAW: This Agreement shall be governed by and construed in accordance with the laws of the State of Mississippi, excluding its conflicts of laws provisions, and any litigation with respect thereto shall be brought in the courts of said state. The Vendor shall comply with applicable federal, state, and local laws and regulations.

15. NOTICE: Any notice required or permitted to be given under this Agreement shall be in writing and personally delivered or sent by certified United States mail, postage prepaid, return receipt requested, to the party to whom the notice should be given at the address set forth below. Notice shall be deemed given when actually received or when refused. The parties agree to promptly notify each other in writing of any change of address.

For the Vendor:	**For the Customer:**
Name	Name
Title	Title
Address	Address
City, State, & Zip Code	City, State, & Zip Code

16. WAIVER: Failure by the Customer at any time to enforce the provisions of this Agreement shall not be construed as a waiver of any such provisions. Such failure to enforce shall not affect the validity of this Agreement or any part thereof or the right of the Customer to enforce any provision at any time in accordance with its terms.

17. CAPTIONS: The captions or headings in this Agreement are for convenience only, and in no way define, limit or describe the scope or intent of any provision or section of this Agreement.

18. SEVERABILITY: If any term or provision of this Agreement is prohibited by the laws of the State of Mississippi or declared invalid or void by a court of competent jurisdiction, the remainder of this Agreement shall be valid and enforceable to the fullest extent permitted by law.

19. THIRD PARTY ACTION NOTIFICATION: Vendor shall give Customer prompt notice in writing of any action or suit filed, and prompt notice of any claim made against Vendor by any entity that may result in litigation related in any way to this Agreement.

20. AUTHORITY TO CONTRACT: Vendor warrants that it is a validly organized business with valid authority to enter into this Agreement and that entry into and performance under this Agreement is not restricted or prohibited by any loan,

security, financing, contractual or other agreement of any kind, and notwithstanding any other provision of this Agreement to the contrary, that there are no existing legal proceedings, or prospective legal proceedings, either voluntary or otherwise, which may adversely affect its ability to perform its obligations under this Agreement.

21. RECORD RETENTION AND ACCESS TO RECORDS: The Vendor agrees that the Customer or any of its duly authorized representatives at any time during the term of this Agreement shall have unimpeded, prompt access to and the right to audit and examine any pertinent books, documents, papers, and records of the Vendor related to the Vendor's charges and performance under this Agreement. All records related to this Agreement shall be kept by the Vendor for a period of three (3) years after final payment under this Agreement and all pending matters are closed unless the Customer authorizes their earlier disposition. However, if any litigation, claim, negotiation, audit or other action arising out of or related in any way to this Agreement has been started before the expiration of the three (3) year period, the records shall be retained for one (1) year after all issues arising out of the action are finally resolved. The Vendor agrees to refund to the Customer any overpayment disclosed by any such audit arising out of or related in any way to this Agreement.

22. EXTRAORDINARY CIRCUMSTANCES: If either party is rendered unable, wholly or in part, by reason of strikes, accidents, acts of God, weather conditions or any other acts beyond its control and without its fault or negligence to comply with any obligations or performance required under this Agreement, then such party shall have the option to suspend its obligations or performance hereunder until the extraordinary performance circumstances are resolved. If the extraordinary performance circumstances are not resolved within a reasonable period of time, however, the non-defaulting party shall have the option, upon prior written notice, of terminating the Agreement.

23. TERMINATION: This Agreement may be terminated as follows: (a) Customer and Vendor mutually agree to the termination, or (b) If either party fails to comply with the terms and conditions of this Agreement and that breach continues for thirty (30) days after the defaulting party receives written notice from the other party, then the non-defaulting party has the right to terminate this Agreement. The non-defaulting party may also pursue any remedy available to it in law or in equity. Upon termination, all obligations of Customer to make payments required hereunder shall cease.

24. AVAILABILITY OF FUNDS: It is expressly understood and agreed that the obligation of the Customer to proceed under this Agreement is conditioned upon the appropriation of funds by the Mississippi State Legislature and the receipt of state and/or federal funds. If the funds anticipated for the continuing fulfillment of the agreement are, at any time, not forthcoming or insufficient, either through the failure of the federal government to provide funds or of the State of Mississippi to appropriate funds or the discontinuance or material alteration of the program under which funds were provided or if funds are not otherwise available to the Customer, the Customer shall have the right upon ten (10) working days written notice to the Vendor, to terminate this Agreement without damage, penalty, cost or expenses to the Customer of any kind whatsoever. The effective date of termination shall be as specified in the notice of termination.

25. MODIFICATION OR RENEGOTIATION: This Agreement may be modified, altered or changed only by written agreement signed by the parties hereto. The parties agree to renegotiate the Agreement if federal, state and/or the Customer's revisions of any applicable laws or regulations make changes in this Agreement necessary.

26. WARRANTIES: Vendor warrants that the equipment, when operated according to the manufacturer's specifications and documented instructions, shall perform the functions indicated by the specifications and documented literature. Vendor may be held liable for any damages caused by failure of the equipment to function according to specifications and documented literature published by the manufacturer of the equipment.

27. E-VERIFY COMPLIANCE: If applicable, the Vendor represents and warrants that it will ensure its compliance with the Mississippi Employment Protection Act of 2008, Section 71-11-1, *et seq*. of the Mississippi Code Annotated (Supp 2008), and will register and participate in the status verification system for all newly hired employees. The term "employee" as used herein means any person that is hired to perform work within the State of Mississippi. As used herein, "status verification system" means the Illegal Immigration Reform and Immigration Responsibility Act of 1996 that is operated by the United States Department of Homeland Security, also known as the E-Verify Program, or any other successor electronic verification system replacing the E-Verify Program. The Vendor agrees to maintain records of such compliance and, upon request of the State and

approval of the Social Security Administration or Department of Homeland Security, where required, to provide a copy of each such verification to the Customer. The Vendor further represents and warrants that any person assigned to perform services hereafter meets the employment eligibility requirements of all immigration laws of these warranties, the breach of which may subject the Vendor to the following: (1) termination of this Agreement and ineligibility for any state or public contract in Mississippi for up to three (3) years, with notice of such cancellation/termination being made public, or (2) the loss of any license, permit, certification or other document granted to the Vendor by an agency, department or governmental entity for the right to do business in Mississippi for up to one (1) year, or (3) both --in the event of such cancellation/termination, the Vendor would also be liable for any additional costs incurred by the Customer due to the contract cancellation or loss of license or permit.

28. HARD DRIVE SECURITY: Vendor must properly format the hard drive, deleting all information, or replace the hard drive with a new hard drive prior to storing or re-selling the equipment. The Customer may request to retain the hard drive for a nominal fee. Vendor will supply written notification to the Customer that all data has been made inaccessible. This notification must be provided with forty-five (45) days of the equipment being returned to the Vendor.

29. ENTIRE AGREEMENT: This Agreement constitutes the entire agreement of the parties with respect to the equipment, software or services described herein and supersedes and replaces any and all prior negotiations, understandings and agreements, written or oral, between the parties relating hereto. No terms, conditions, understandings, usages of the trade, course of dealings or agreements, not specifically set out in this Agreement or incorporated herein, shall be effective or relevant to modify, vary, explain or supplement this Agreement.

30. TRANSPARENCY: This Agreement, including any accompanying exhibits, attachments, and appendices, is subject to the "Mississippi Public Records Act of 1983," codified as Section 25-61-1 et seq., Mississippi Code Annotated and exceptions found in Section 79-23-1 of the Mississippi Code Annotated (1972, as amended). In addition, this Agreement is subject to provisions of the Mississippi Accountability and Transparency Act of 2008 (MATA), codified as Section 27-104-151 of the Mississippi Code Annotated (1972, as amended). Unless exempted from disclosure due to a court-issued protective order, this Agreement is required to be posted to the Department of Finance and Administration's independent agency contract website for public access. Prior to posting the Agreement to the website, any information identified by the Vendor as trade secrets, or other proprietary information including confidential vendor information, or any other information which is required confidential by state or federal law or outside the applicable freedom of information statutes will be redacted. A fully executed copy of this Agreement shall be posted to the State of Mississippi's accountability website at: http://www.transparency.mississippi.gov.

31. COMPLIANCE WITH LAWS: The Vendor understands that the Customer is an equal opportunity employer and therefore maintains a policy which prohibits unlawful discrimination based on race, color, creed, sex, age, national origin, physical handicap, disability, genetic information, or any other consideration made unlawful by federal, state, or local laws. All such discrimination is unlawful and the Vendor agrees during the term of the Agreement that the Vendor will strictly adhere to this policy in its employment practices and provision of services. The Vendor shall comply with, and all activities under this Agreement shall be subject to, all applicable federal, State of Mississippi, and local laws and regulations, as now existing and as may be amended or modified.

For the faithful performance of the terms of this Agreement, the parties have caused this Agreement to be executed by their undersigned representatives.

Witness my signature this the _____day of _____, 20__.

Vendor: **RJ Young**

By: Buddy Wade

Authorized Signature

Printed Name: BUDDY WADE

Title: _____

Witness my signature this the _____day of _____, 20__.

Customer: **CITY OF HATTIESBURG**

By: X

Authorized Signature

Printed Name: X

Title: X

EXHIBIT A
RENTAL AGREEMENT
FOR USE BY
MISSISSIPPI Agencies AND VENDORS
(Applicable to Equipment Rental Transactions)

The following, when signed by the Customer and the Vendor shall be considered to be a part of the Rental Agreement between the parties.

State Contract Number: **#8200038144**

Vendor Company Name: **RJ Young**

Customer Agency Name: **City of Hattiesburg**

Bill to Address: **P.O. Box 1898 Hattiesburg, Mississippi 39401**

Ship to Address: **200 Forrest Street - City Clerk**

Description of Equipment, Software, or Services	Price
Ricoh MP C4504EX Digital Copy System	**$204..00 per month**
With Paper bank 3240 / Bridge unit / Finisher 3210 / Punch Unit / Fax module	

Service Pricing: Cost per copy, billed monthly

Black Copies at $.0070

Color Copies at $.0450

Delivery Schedule and Installation Date: As soon as possible

Rental Term: **48 Months**
Start Date:
End Date:

Modifications: Per Mississippi State Contract

Buddy Wade
Vendor Signature

X
Customer Signature

Revised Date: February 2017

RENTAL AGREEMENT
FOR USE BY MISSISSIPPI AGENCIES & GOVERNING AUTHORITIES AND VENDORS
(applicable to equipment rental transactions)

This Rental Agreement (hereinafter referred to as Agreement) is entered into by and between

CITY OF HATTIESBURG
(hereinafter referred to as Customer), and **RJ Young** (hereinafter referred to as Vendor). This Agreement becomes effective upon signature by Customer and Vendor, and shall take precedence over all agreements and understandings between the parties. Vendor, by its acceptance hereof, agrees to rent to Customer, and Customer, by its acceptance hereof, agrees to rent from Vendor, the equipment, including applicable software and services to render it continually operational, listed in Exhibit A, which is attached hereto and incorporated herein.

1. CUSTOMER ACCOUNT ESTABLISHMENT:

A. A separate Vendor Customer Number will be required for each specific customer/installation location.

B. The Customer is identified as the entity on the first line of the "bill-to" address. All invoices and notices of changes will be sent to the "bill-to" address in accordance with Paragraph 8 herein.

C. Ship-to and/or Installed-at address is the location to which the initial shipment of equipment/supplies will be made and the address to which service representatives will respond. Subsequent shipments of supplies for installed equipment will also be delivered to the "installed-at" address unless otherwise requested.

D. Unless creditworthiness for this Customer Number has been previously established by Vendor, Vendor's Credit Department may conduct a credit investigation for this Agreement. Notwithstanding delivery of equipment, Vendor may revoke this Agreement by written notice to the Customer if credit approval is denied within thirty (30) days after the date this Agreement is accepted for Vendor by an authorized representative.

2. EQUIPMENT SELECTION, PRICES, AND AGREEMENT: The Customer has selected and Vendor agrees to provide the equipment, including applicable software and services to render it continually operational, identified on Exhibit A attached to this Agreement. The specific prices, inclusive of applicable transportation charges, are as set forth on the attached Exhibit A. The parties understand and agree that the Customer is exempt from the payment of taxes.

3. SHIPPING AND TRANSPORTATION: Vendor agrees to pay all non-priority, ground shipping, transportation, rigging and drayage charges for the equipment from the equipment's place of manufacture to the installation address of the equipment as specified under this Agreement. If any form of express shipping method is requested, it will be paid for by Customer.

4. RISK OF LOSS OR DAMAGE TO EQUIPMENT: While in transit, Vendor shall assume and bear the entire risk of loss and damage to the equipment from any cause whatsoever. If, during the period the equipment is in Customer's possession, due to gross negligence of the customer, the equipment is lost or damaged, then, the customer shall bear the cost of replacing or repairing said equipment.

5. DELIVERY, INSTALLATION, ACCEPTANCE, AND RELOCATION:

A. DELIVERY: Vendor shall deliver the equipment to the location specified by Customer and pursuant to the delivery schedule agreed upon by the parties. If, through no fault of the Customer, Vendor is unable to deliver the equipment or software, the prices, terms and conditions will remain unchanged until delivery is made by Vendor. If, however, Vendor does not deliver the equipment or software within ten (10) working days of the delivery due date, Customer shall have the right to terminate the order without penalty, cost or expense to Customer of any kind whatsoever.

B. INSTALLATION SITE: At the time of delivery and during the period Vendor is responsible for maintenance of the equipment, the equipment installation site must conform to Vendor's published space, electrical and environmental requirements; and the Customer agrees to provide, at no charge, reasonable access to the equipment and to a telephone for local or toll free calls.

C. INSTALLATION DATE: The installation date of the equipment shall be that date as is agreed upon by the parties, if Vendor is responsible for installing the equipment.

D. ACCEPTANCE: Unless otherwise agreed to by the parties, Vendor agrees that Customer shall have ten (10) working days from date of delivery and installation, to inspect, evaluate and test the equipment to confirm that it is in good working order.

E. RELOCATION: Customer may transfer equipment to a new location by notifying Vendor in writing of the transfer at least thirty (30) calendar days before the move is made. If Vendor is responsible for maintenance of the equipment, this notice will enable Vendor to provide technical assistance in the relocation efforts, if needed, as well as to update Vendor's records as to machine location. There will be no cessation of rental charges during the period of any such transfer. The Vendor's cost of moving and reinstalling equipment from one location to another is not included in this Agreement, and Customer agrees to pay Vendor, after receipt of invoice of Vendor's charges with respect to such moving of equipment, which will be billed to Customer in accordance with Vendor's standard practice then in effect for commercial users of similar equipment or software and payment remitted in accordance with Paragraph 8 herein.

6. RENTAL TERM: The rental term for each item of equipment shall be that as stated in the attached Exhibit A. If the Customer desires to continue renting the equipment at the expiration of the original rental agreement, the Customer must enter into a new rental agreement which shall be separate from this Agreement. There will be no automatic renewals allowed. There shall be no option to purchase.

7. OWNERSHIP: Unless the Customer has obtained title to the equipment, title to the equipment shall be and remain vested at all times in Vendor or its assignee and nothing in this Agreement shall give or convey to Customer any right, title or interest therein, unless purchased by Customer. Nameplates, stencils or other indicia of Vendor's ownership affixed or to be affixed to the equipment shall not be removed or obliterated by Customer.

8. PAYMENTS:

A. INVOICING AND PAYMENTS: The charges for the equipment, software or services covered by this Agreement are specified in the attached Exhibit A. Charges for any partial month for any item of equipment shall be prorated based on a thirty (30) day month. Vendor shall submit an invoice with the appropriate documentation to Customer.

1. E-PAYMENT: The Vendor agrees to accept all payments in United States currency via the State of Mississippi's electronic payment and remittance vehicle. The Customer agrees to make payment in accordance with Mississippi law on "Timely Payments for Purchases by Public Bodies", Section 31-7-301, *et seq*. of the 1972 Mississippi Code Annotated, as amended, which generally provides for payment of undisputed amounts by the agency within forty-five (45) days of receipt of the invoice.

2. PAYMODE: Payments by state agencies using Mississippi's Accountability System for Government Information and Collaboration (MAGIC) shall be made and remittance information provided electronically as directed by the State. The State, may at its sole discretion, require the Vendor to submit invoices and supporting documentation electronically at any time during the term of this Agreement. These payments shall be deposited into the bank account of the Vendor's choice. The Vendor understands and agrees that the State is exempt from the payment of taxes. All payments shall be in United States currency.

B. METER READINGS: If applicable, the Customer shall provide accurate and timely meter readings at the end

of each applicable billing period on the forms or other alternative means specified by Vendor. Vendor shall have the right, upon reasonable prior notice to Customer, and during Customer's regular business hours, to inspect the equipment and to monitor the meter readings. If Customer meter readings are not received in the time to be agreed upon by the parties, the meter readings may be obtained electronically or by other means or may be estimated by Vendor subject to reconciliation when the correct meter reading is received by Vendor.

C. COPY CREDITS: If applicable, if a copier is being rented, the Customer will receive one (1) copy credit for each copy presented to Vendor which, in the Customer's opinion, is unusable and also for each copy which was produced during servicing of the equipment. Copy credits will be issued only if Vendor is responsible for providing equipment services or maintenance services (except time and materials maintenance). Copy credits will be reflected on the invoice as a reduction in the total copy volume, except for run length plans which will be credited at a specific copy credit rate as shown on the applicable price list.

9. USE OF EQUIPMENT: Customer shall operate the equipment according to the manufacturer's specifications and documented instructions. Customer agrees not to employ or use additional attachments, features or devices on the equipment or make changes or alterations to the equipment covered hereby without the prior written consent of Vendor in each case, which consent shall not be unreasonably withheld.

10. MAINTENANCE SERVICES, EXCLUSIONS, AND REMEDIES:

A. SERVICES: If Vendor is responsible for providing equipment services, maintenance services (except for time and materials), or warranty services: (1) Vendor shall install and maintain the equipment and make all necessary adjustments and repairs to keep the equipment in good working order. (2) Parts required for repair may be used or reprocessed in accordance with Vendor's specifications and replaced parts are the property of Vendor, unless otherwise specifically provided on the price lists. (3) Services will be provided during Customer's usual business hours. (4) If applicable, Customer will permit Vendor to install, at no cost to Customer, all retrofits designated by Vendor as mandatory or which are designed to insure accuracy of meters.

B. EXCLUSIONS: The following is not within the scope of services: (1) Provision and installation of optional retrofits. (2) Services connected with equipment relocation. (3) Installation/removal of accessories, attachments or other devices. (4) Exterior painting or refinishing of equipment. (5) Maintenance, installation or removal of equipment or devices not provided by Vendor. (6) Performance of normal operator functions as described in applicable Vendor operator manuals. (7) Performance of services necessitated by accident; power failure; unauthorized alteration of equipment or software; tampering; service by someone other than Vendor; causes other than ordinary use; interconnection of equipment by electrical, or electronic or mechanical means with noncompatible equipment, or failure to use operating system software. If Vendor provides, at the request of the Customer, any of the services noted above, the Customer may be billed by Vendor at a rate not to exceed the Master State Prices Agreement between the Vendor and the State of Mississippi, or in the absence of such agreement at the then current time and materials rates.

C. REMEDIES: If during the period in which Vendor is providing maintenance services, Vendor is unable to maintain the equipment in good working order, Vendor will, at no additional charge, provide either an identical replacement or another product that provides equal or greater capabilities.

11. HOLD HARMLESS: To the fullest extent allowed by law, Vendor shall indemnify, defend, save and hold harmless, protect, and exonerate the Customer and the State of Mississippi, its Commissioners, Board Members, officers, employees, agents, and representatives from and against all claims, demands, liabilities, suits, actions, damages, losses, and costs of every kind and nature whatsoever, including, without limitation, court costs, investigative fees and expenses, and attorneys' fees, arising out of or caused by Vendor and/or its partners, principals, agents, employees, and/or subcontractors in the performance of or failure to perform this Agreement. In the Customer's sole discretion, Vendor may be allowed to control the defense of any such claim, suit, etc. In the event Vendor defends said claim, suit, etc., Vendor shall use legal counsel acceptable to the Customer; Vendor shall be solely liable for all reasonable costs and/or expenses associated with such defense and the Customer shall be entitled to participate in said defense. Vendor shall not settle any claim, suit, etc., without the Customer's concurrence,

which the Customer shall not unreasonably withhold.

12. ALTERATIONS, ATTACHMENTS, AND SUPPLIES:

A. If Customer makes an alteration, attaches a device or utilizes a supply item that increases the cost of services, Vendor will either propose an additional service charge or request that the equipment be returned to its standard configuration or that use of the supply item be discontinued. If, within five (5) days of such proposal or request, Customer does not remedy the problem or agree in writing to do so within a reasonable amount of time, Vendor shall have the right to terminate this Agreement as provided herein. If Vendor believes that an alteration, attachment or supply item affects the safety of Vendor personnel or equipment users, Vendor shall notify Customer of the problem and may withhold maintenance until the problem is remedied.

B. Unless Customer has obtained title to the equipment free and clear of any Vendor security interest, Customer may not remove any ownership identification tags on the equipment or allow the equipment to become fixtures to real property.

13. ASSIGNMENT: The Vendor shall not assign, subcontract or otherwise transfer in whole or in part, its right or obligations under this Agreement without prior written consent of the Customer. Any attempted assignment or transfer without said consent shall be void and of no effect.

14. GOVERNING LAW: This Agreement shall be governed by and construed in accordance with the laws of the State of Mississippi, excluding its conflicts of laws provisions, and any litigation with respect thereto shall be brought in the courts of said state. The Vendor shall comply with applicable federal, state, and local laws and regulations.

15. NOTICE: Any notice required or permitted to be given under this Agreement shall be in writing and personally delivered or sent by certified United States mail, postage prepaid, return receipt requested, to the party to whom the notice should be given at the address set forth below. Notice shall be deemed given when actually received or when refused. The parties agree to promptly notify each other in writing of any change of address.

For the Vendor:	**For the Customer:**
Name	Name
Title	Title
Address	Address
City, State, & Zip Code	City, State, & Zip Code

16. WAIVER: Failure by the Customer at any time to enforce the provisions of this Agreement shall not be construed as a waiver of any such provisions. Such failure to enforce shall not affect the validity of this Agreement or any part thereof or the right of the Customer to enforce any provision at any time in accordance with its terms.

17. CAPTIONS: The captions or headings in this Agreement are for convenience only, and in no way define, limit or describe the scope or intent of any provision or section of this Agreement.

18. SEVERABILITY: If any term or provision of this Agreement is prohibited by the laws of the State of Mississippi or declared invalid or void by a court of competent jurisdiction, the remainder of this Agreement shall be valid and enforceable to the fullest extent permitted by law.

19. THIRD PARTY ACTION NOTIFICATION: Vendor shall give Customer prompt notice in writing of any action or suit filed, and prompt notice of any claim made against Vendor by any entity that may result in litigation related in any way to this Agreement.

20. AUTHORITY TO CONTRACT: Vendor warrants that it is a validly organized business with valid authority to enter into this Agreement and that entry into and performance under this Agreement is not restricted or prohibited by any loan,

security, financing, contractual or other agreement of any kind, and notwithstanding any other provision of this Agreement to the contrary, that there are no existing legal proceedings, or prospective legal proceedings, either voluntary or otherwise, which may adversely affect its ability to perform its obligations under this Agreement.

21. RECORD RETENTION AND ACCESS TO RECORDS: The Vendor agrees that the Customer or any of its duly authorized representatives at any time during the term of this Agreement shall have unimpeded, prompt access to and the right to audit and examine any pertinent books, documents, papers, and records of the Vendor related to the Vendor's charges and performance under this Agreement. All records related to this Agreement shall be kept by the Vendor for a period of three (3) years after final payment under this Agreement and all pending matters are closed unless the Customer authorizes their earlier disposition. However, if any litigation, claim, negotiation, audit or other action arising out of or related in any way to this Agreement has been started before the expiration of the three (3) year period, the records shall be retained for one (1) year after all issues arising out of the action are finally resolved. The Vendor agrees to refund to the Customer any overpayment disclosed by any such audit arising out of or related in any way to this Agreement.

22. EXTRAORDINARY CIRCUMSTANCES: If either party is rendered unable, wholly or in part, by reason of strikes, accidents, acts of God, weather conditions or any other acts beyond its control and without its fault or negligence to comply with any obligations or performance required under this Agreement, then such party shall have the option to suspend its obligations or performance hereunder until the extraordinary performance circumstances are resolved. If the extraordinary performance circumstances are not resolved within a reasonable period of time, however, the non-defaulting party shall have the option, upon prior written notice, of terminating the Agreement.

23. TERMINATION: This Agreement may be terminated as follows: (a) Customer and Vendor mutually agree to the termination, or (b) If either party fails to comply with the terms and conditions of this Agreement and that breach continues for thirty (30) days after the defaulting party receives written notice from the other party, then the non-defaulting party has the right to terminate this Agreement. The non-defaulting party may also pursue any remedy available to it in law or in equity. Upon termination, all obligations of Customer to make payments required hereunder shall cease.

24. AVAILABILITY OF FUNDS: It is expressly understood and agreed that the obligation of the Customer to proceed under this Agreement is conditioned upon the appropriation of funds by the Mississippi State Legislature and the receipt of state and/or federal funds. If the funds anticipated for the continuing fulfillment of the agreement are, at any time, not forthcoming or insufficient, either through the failure of the federal government to provide funds or of the State of Mississippi to appropriate funds or the discontinuance or material alteration of the program under which funds were provided or if funds are not otherwise available to the Customer, the Customer shall have the right upon ten (10) working days written notice to the Vendor, to terminate this Agreement without damage, penalty, cost or expenses to the Customer of any kind whatsoever. The effective date of termination shall be as specified in the notice of termination.

25. MODIFICATION OR RENEGOTIATION: This Agreement may be modified, altered or changed only by written agreement signed by the parties hereto. The parties agree to renegotiate the Agreement if federal, state and/or the Customer's revisions of any applicable laws or regulations make changes in this Agreement necessary.

26. WARRANTIES: Vendor warrants that the equipment, when operated according to the manufacturer's specifications and documented instructions, shall perform the functions indicated by the specifications and documented literature. Vendor may be held liable for any damages caused by failure of the equipment to function according to specifications and documented literature published by the manufacturer of the equipment.

27. E-VERIFY COMPLIANCE: If applicable, the Vendor represents and warrants that it will ensure its compliance with the Mississippi Employment Protection Act of 2008, Section 71-11-1, *et seq.* of the Mississippi Code Annotated (Supp 2008), and will register and participate in the status verification system for all newly hired employees. The term "employee" as used herein means any person that is hired to perform work within the State of Mississippi. As used herein, "status verification system" means the Illegal Immigration Reform and Immigration Responsibility Act of 1996 that is operated by the United States Department of Homeland Security, also known as the E-Verify Program, or any other successor electronic verification system replacing the E-Verify Program. The Vendor agrees to maintain records of such compliance and, upon request of the State and

approval of the Social Security Administration or Department of Homeland Security, where required, to provide a copy of each such verification to the Customer. The Vendor further represents and warrants that any person assigned to perform services hereafter meets the employment eligibility requirements of all immigration laws of these warranties, the breach of which may subject the Vendor to the following: (1) termination of this Agreement and ineligibility for any state or public contract in Mississippi for up to three (3) years, with notice of such cancellation/termination being made public, or (2) the loss of any license, permit, certification or other document granted to the Vendor by an agency, department or governmental entity for the right to do business in Mississippi for up to one (1) year, or (3) both --in the event of such cancellation/termination, the Vendor would also be liable for any additional costs incurred by the Customer due to the contract cancellation or loss of license or permit.

28. HARD DRIVE SECURITY: Vendor must properly format the hard drive, deleting all information, or replace the hard drive with a new hard drive prior to storing or re-selling the equipment. The Customer may request to retain the hard drive for a nominal fee. Vendor will supply written notification to the Customer that all data has been made inaccessible. This notification must be provided with forty-five (45) days of the equipment being returned to the Vendor.

29. ENTIRE AGREEMENT: This Agreement constitutes the entire agreement of the parties with respect to the equipment, software or services described herein and supersedes and replaces any and all prior negotiations, understandings and agreements, written or oral, between the parties relating hereto. No terms, conditions, understandings, usages of the trade, course of dealings or agreements, not specifically set out in this Agreement or incorporated herein, shall be effective or relevant to modify, vary, explain or supplement this Agreement.

30. TRANSPARENCY: This Agreement, including any accompanying exhibits, attachments, and appendices, is subject to the "Mississippi Public Records Act of 1983," codified as Section 25-61-1 et seq., Mississippi Code Annotated and exceptions found in Section 79-23-1 of the Mississippi Code Annotated (1972, as amended). In addition, this Agreement is subject to provisions of the Mississippi Accountability and Transparency Act of 2008 (MATA), codified as Section 27-104-151 of the Mississippi Code Annotated (1972, as amended). Unless exempted from disclosure due to a court-issued protective order, this Agreement is required to be posted to the Department of Finance and Administration's independent agency contract website for public access. Prior to posting the Agreement to the website, any information identified by the Vendor as trade secrets, or other proprietary information including confidential vendor information, or any other information which is required confidential by state or federal law or outside the applicable freedom of information statutes will be redacted. A fully executed copy of this Agreement shall be posted to the State of Mississippi's accountability website at: http://www.transparency.mississippi.gov.

31. COMPLIANCE WITH LAWS: The Vendor understands that the Customer is an equal opportunity employer and therefore maintains a policy which prohibits unlawful discrimination based on race, color, creed, sex, age, national origin, physical handicap, disability, genetic information, or any other consideration made unlawful by federal, state, or local laws. All such discrimination is unlawful and the Vendor agrees during the term of the Agreement that the Vendor will strictly adhere to this policy in its employment practices and provision of services. The Vendor shall comply with, and all activities under this Agreement shall be subject to, all applicable federal, State of Mississippi, and local laws and regulations, as now existing and as may be amended or modified.

For the faithful performance of the terms of this Agreement, the parties have caused this Agreement to be executed by their undersigned representatives.

Witness my signature this the _____day of _____, 20__.

Vendor: **RJ Young**

By: Buddy Wade
Authorized Signature

Printed Name: BUDDY WADE

Title: _____

Witness my signature this the 7th day of August, 2018.

Customer: **CITY OF HATTIESBURG**

By: X
Authorized Signature

Printed Name: X Toby Barker

Title: X Mayor

Revised Date: February 2017

EXHIBIT A
RENTAL AGREEMENT
FOR USE BY
MISSISSIPPI Agencies AND VENDORS
(Applicable to Equipment Rental Transactions)

The following, when signed by the Customer and the Vendor shall be considered to be a part of the Rental Agreement between the parties.

State Contract Number: **#8200038144**

Vendor Company Name: **RJ Young**

Customer Agency Name: **City of Hattiesburg**

Bill to Address: **P.O. Box 1898 Hattiesburg, Mississippi 39401**

Ship to Address: **200 Forrest Street - City Clerk**

Description of Equipment, Software, or Services	Price
Ricoh MP C4504EX Digital Copy System	**$204..00 per month**
With Paper bank 3240 / Bridge unit / Finisher 3210 / Punch Unit / Fax module	

Service Pricing: Cost per copy, billed monthly

Black Copies at $.0070

Color Copies at $.0450

Delivery Schedule and Installation Date: As soon as possible

Rental Term: **48 Months**
Start Date:
End Date:

Modifications: Per Mississippi State Contract

Buddy Wade
Vendor Signature

X
Customer Signature

City of Hattiesburg, MS

200 Forrest St.
P.O. Box 1898
Hattiesburg, MS 39401

Master

File Number: 2018-631

File ID:	2018-631	**Type:**	Regular Agenda Item	**Status:**	Approved
Version:	1	**Reference:**		**In Control:**	City Council
Requester:	Ronnie Perkins			**File Created:**	07/12/2018
Brief Title:	RJYoung Copier Agreement 2018			**Final Action:**	
				Minute Book Number:	MB 2018-196

Title: Authorize Mayor to execute Service Agreement between City of Hattiesburg and RJ Young for a copier located at the Recreation Administration Office at a cost of $583.20 per year.

Notes:

		Agenda Date:	08/07/2018
Indexes:		**Agenda Number:**	VII.-4
Sponsors:		**Enactment Date:**	
Attachments:	RJ Young Agreement 2018, Executed - RJ Young Agreement for Recreation Dept 2018	**Enactment Number:**	
Contact:		**Meeting Date:**	
Drafter:	Linda Montgomery	**Effective Date:**	

History of Legislative File

Version:	Acting Body:	Date:	Action:	Sent To:	Due Date:	Return Date:	Result:
1	City Council	08/07/2018	Approved on the Routine Agenda				Pass

Action Text: A MOTION was made by Council Member George and seconded by Council Member Brown to Authorize Mayor to execute Service Agreement between City of Hattiesburg and RJ Young for a copier located at the Recreation Administration Office at a cost of $583.20 per year.

There being no discussion, the Motion received the affirmative vote of the Council as follows:

Yeas: 5 - George, Delgado, Carroll, Dryden and Brown

Nays: 0

Yea: 5 Council Member George
Council Member Delgado
Council President Carroll
Council Vice President Dryden
Council Member Brown

Text of Legislative File 2018-631

Title
Authorize Mayor to execute Service Agreement between City of Hattiesburg and RJ Young for a copier located at the Recreation Administration Office at a cost of $583.20 per year.

Summary
Service Agreement for a copier located at the Recreation Administration Office.
Agreement

Expenditure Type

Regular Budget Item

RJYoung

BUDDY WADE
d: 601-705-1205

SERVICE CONTRACT RENEWAL FOR CANON IR C5235 COPIER AT PARKS AND RECREATION

ANNUAL SERICE AGREEMENT: **CANON IR C5235 SYSTEM**
I.D. # 293CD
SERIAL # RRB05337

CONTRACT INCLUDES: ALL PARTS, LABOR AND TONER FOR 4,500 COPIES PER MONTH IN BLACK (54,000 ANNUALLY)
COLOR COPIES WILL BE BILLED IN ARREARS AT $.0679 PER COPY

ANNUAL CONTRACT PRICE: $ 583.20

PLEASE FEEL FREE TO GIVE ME A CALL IF YOU NEED ADDITIONAL INFORMATION.

BUDDY WADE
601-408-1899

RJ Young Company - Nashville
P.O. Box 40623 Nashville, TN 37204

(615)255-8551
(800)347-1955

Order # FY3T00

Supply Maintenance Plan Agreement

Customer Purchase Order

Sales Rep # 10SA53

Billing Location	*Install Location*
Full Customer Name – Include Inc., Corp., LLC etc.: City of Hattiesburg	Customer Name: City of Hattiesburg- Parks and Recreation
	Department: Parks and Recreation; County: Forrest
Street Address: P.O. Box 1898	Street Address: 300 N. 12th Ave.
City: Hattiesburg; State: MS; Zip+4: 39403	City: Hattiesburg; State: MS; Zip+4: 39403
Contact Name: Linda Montgomery; Phone #: 601-545-4623; Fax #:	Meter Contact: Linda Montgomery; Phone #: 601-545-4623; Fax #:
Email:	Email: lmontgomery@hattiesburgms.com

Qty.	Manufacturer	Equip. ID	Model	Serial Number	Unit Price	Amount
1	Canon	293CD	IR C5235 system	RRB05337		
Trade-In/Buyout (Items to be picked up)					Total This Page	
					Total From Add'l Equipment List	
					Sales Tax	
				Tax Exempt ☐ Yes ■ No Attach Exemption Certificate	Total	

1) The equipment specified above will be provided at the following rates:

Commencement Date	SMP/Maintenance	Total Minimum Payment	Minimum Billing Frequency	Overage Billing Frequency
	SMP	$583.20	Annual	Annual

Monthly Minimum Number of B&W Copies: 4500	Overage Rate per B&W Copy: 0.010800	Monthly Minimum Number of Color Copies: 0	Overage Rate per Color Copy: 0.067900
Monthly Minimum Number of Square Feet	Overage Rate per Square Foot	Monthly Minimum Number of Linear Feet	Overage Rate per Linear Foot
Monthly Minimum Number of B&W Prints	Overage Rate per B&W Print	Monthly Minimum Number of Color Prints	Overage Rate per Color Print
Monthly Minimum Number of Misc	Overage Rate per Misc	Monthly Minimum Number of Misc 2	Overage Rate per Misc 2

Agreement Includes

☐ Yes	■ No	Master Unit
■ Yes	☐ No	Color Supplies
■ Yes	☐ No	Drum/Photo Conductor
☐ Yes	■ No	Imaging Units
■ Yes	☐ No	Parts/Labor
■ Yes	☐ No	Toner/Dispersant
☐ Yes	■ No	Developer
☐ Yes	■ No	Other

☐ New Account ☐ New Equipment
☐ Upgrade ■ Remanufactured Equipment
■ Additional Unit
☐ MAM ☐ Used

☐ Yes ■ No MICR Toner

Remarks:
SMP for this account had expired and we did not invoice for the renewal... this is a 12 month contract ... State Contract Account

Additional terms and conditions on page 2.

Signature: X
Print Name: X
Title: X Date:

Sales Rep: Buddy Wade Date: 2/12/18

Sales Manager: Date:

2. The title to any and all products listed on the Sales Order remain with RJ Young Company (RJY) until full payment is received from you. Invoices are payable upon receipt unless prior written approval is received from the RJY corporate offices.

3. Without prior written approval of RJY you may not assign any of your rights or obligations under this Agreement or allow a lien or encumbrance of any kind to be placed upon any products for which you have not received title free and clear.

4. If payment is not paid when due, you will pay us a late charge of up to 15% of the amount of the payment or $15.00 whichever is greater (or such lesser rate as is maximum rate allowed under applicable law). You also agree to pay $35.00 for each returned check. Restrictive endorsements or additional terms on checks you send to us will not reduce your obligations to us.

5. If payment is not paid when due, we will have the right to take ONE OR MORE of the following actions, in addition to any and all other remedies that may be available to us under the law: (a) cancel this agreement without prior notice or warning to you; (b) file a law suit against you to collect all past due amounts, plus all our reasonable legal costs, including but not limited to reasonable attorneys' fees, reasonable overhead for employee time spent on preparing for suit or attempting to collect payments and mitigate our damages; (c) repossess the Equipment or apply to a court for an order allowing repossession for any Equipment for which you have not received title free and clear.

6. This Agreement, and other terms and conditions that you have acknowledged receipt of by signing this Sales Order, constitute the entire Agreement.

7. As a convenience to you and to further expedite this transaction for you, you agree that a photocopy, electronic image or facsimile of this Agreement which includes a photocopy, electronic image or facsimile of the signatures of both parties shall be as valid, authentic and legally binding as the original version for all purposes and shall be admissible in court as final and conclusive evidence of this transaction and of the execution of this document.

SMP AND/OR MAINTENANCE AGREEMENT

The following terms and conditions are in addition to the General Terms and Conditions above.

8. Service includes both labor and material for adjustments, repairs and replacement of parts as necessitated by normal equipment usage. Also included are regularly scheduled preventive maintenance and emergency service subject to provisions. The charge is based on the original geographic installation location of the machine and RJY must be notified whenever the geographical location of the equipment is changed. If the equipment has been moved to a new RJY service zone, a new agreement must be reached. For efficient and electronic meter reading, RJY utilizes specialized software that reports current meter readings on all print devices connected to your Network. Customer agrees that meters may be accessed and reported in this manner. Should the number of scans exceed the total of all prints and copies, we reserve the right to invoice these excess scans at $.0025 per scan. This agreement does not cover overhauls on the machine.

9. Service calls will be made during normal business hours at the specified installation address. (Business hours are 8:00 a.m. to 5:00 p.m., Monday to Friday). Travel and labor time on calls made other than during normal business hours will be charged to Customer at established overtime rates.

10. Meter cards or fax forms will be provided to the Customer for monthly or quarterly billings. If forms are not received by the required date, an estimated meter will be used for billing purposes.

11. Customer agrees to make available a Meter Contact for training purposes in the use of the equipment and agrees to notify RJY of any change in the Meter Contact assignment.

12. Service will not be provided on equipment upon which there has been used unauthorized parts or supplies or that has been modified or used by unauthorized personnel to repair or change said equipment. Master or drums will not be replaced under this agreement when damage is caused by operator abuse or error. An initial master or drum charge may be required on older equipment.

13. This agreement shall be effective on the date of delivery of equipment if new equipment, otherwise on the commencement date listed on the contract and shall continue for a period of 12 months from the date and will automatically renew for consecutive 12 month periods unless written cancellation notice is given by either party 30 days prior to the end of the then current term. In the event of cancellation of this agreement for any reason, unused supplies shall be the property of RJY, although Customer may purchase the supplies at the then prevailing retail rates. Customer agrees to pay the periodic charges and upon failure to do so RJY may (1) terminate the agreement, (2) refuse to service the equipment or furnish supplies, (3) recover damages as a result thereof.

14. At the end of each contract anniversary date, the rate charge can increase without written notice to allow for cost increases.

15. This agreement is not refundable or transferrable to a third party. If the equipment is traded in on new equipment, any unused portion of the contract period charge shall be prorated and credited to the Customer.

16. This agreement may not be assigned by Customer without the written consent of RJY. This instrument contains the entire agreement between the parties and cannot be altered or amended except by an instrument in writing signed by the parties hereto. Any agreement containing variations from the printed terms set forth herein must be accepted and counter-signed by an officer of RJY at its offices in Nashville, Tennessee.

17. Sales or use tax shall be added where applicable.

RJYoung

BUDDY WADE
d: 601-705-1205

SERVICE CONTRACT RENEWAL FOR CANON IR C5235 COPIER AT PARKS AND RECREATION

ANNUAL SERICE AGREEMENT: **CANON IR C5235 SYSTEM**
I.D. # 293CD
SERIAL # RRB05337

CONTRACT INCLUDES: ALL PARTS, LABOR AND TONER FOR 4,500 COPIES PER MONTH IN BLACK (54,000 ANNUALLY)
COLOR COPIES WILL BE BILLED IN ARREARS AT $.0679 PER COPY

ANNUAL CONTRACT PRICE: $ 583.20

PLEASE FEEL FREE TO GIVE ME A CALL IF YOU NEED ADDITIONAL INFORMATION.

BUDDY WADE
601-408-1899

RJ Young Company - Nashville
P.O. Box 40623 Nashville, TN 37204

(615)255-8551
(800)347-1955

Order # FY3T00

Supply Maintenance Plan Agreement

Customer Purchase Order

Sales Rep # 10SA53

Billing Location	*Install Location*
Full Customer Name – Include Inc., Corp., LLC etc City of Hattiesburg	Customer Name City of Hattiesburg- Parks and Recreation
	Department: Parks and Recreation County: Forrest
Street Address P.O. Box 1898	Street Address 300 N. 12th Ave.
City: Hattiesburg State: MS Zip+4: 39403	City: Hattiesburg State: MS Zip+4: 39403
Contact Name: Linda Montgomery Phone #: 601-545-4623 Fax #	Meter Contact: Linda Montgomery Phone #: 601-545-4623 Fax #
Email	Email lmontgomery@hattiesburgms.com

Qty.	Manufacturer	Equip. ID	Model	Serial Number	Unit Price	Amount
1	Canon	293CD	IR C5235 system	RRB05337		
Trade-In/Buyout (Items to be picked up)					Total This Page	
					Total From Add'l Equipment List	
					Sales Tax	
				Tax Exempt ☐ Yes ■ No Attach Exemption Certificate	Total	

1) The equipment specified above will be provided at the following rates:

Commencement Date	SMP/Maintenance	Total Minimum Payment	Minimum Billing Frequency	Overage Billing Frequency
	SMP	$583.20	Annual	Annual

Monthly Minimum Number of B&W Copies 4500	Overage Rate per B&W Copy 0.010800	Monthly Minimum Number of Color Copies 0	Overage Rate per Color Copy 0.067900
Monthly Minimum Number of Square Feet	Overage Rate per Square Foot	Monthly Minimum Number of Linear Feet	Overage Rate per Linear Foot
Monthly Minimum Number of B&W Prints	Overage Rate per B&W Print	Monthly Minimum Number of Color Prints	Overage Rate per Color Print
Monthly Minimum Number of Misc	Overage Rate per Misc	Monthly Minimum Number of Misc 2	Overage Rate per Misc 2

Agreement Includes

- ☐ Yes ■ No Master Unit
- ■ Yes ☐ No Color Supplies
- ■ Yes ☐ No Drum/Photo Conductor
- ☐ Yes ■ No Imaging Units
- ■ Yes ☐ No Parts/Labor
- ■ Yes ☐ No Toner/Dispersant
- ☐ Yes ■ No Developer
- ☐ Yes ■ No Other

- ☐ New Account
- ☐ Upgrade
- ■ Additional Unit
- ■ MAM
- ☐ New Equipment
- ■ Remanufactured Equipment
- ☐ Used

■ Yes ■ No MICR Toner

Remarks:
SMP for this account had expired and we did not invoice for the renewal... this is a 12 month contract ... State Contract Account

Additional terms and conditions on page 2.

Signature: X
Print Name: X Toby Barker
Title: X Mayor Date: 8-7-18

Sales Rep: Buddy Wade Date: 7/12/18

Sales Manager: _____ Date: _____

2. The title to any and all products listed on the Sales Order remain with RJ Young Company (RJY) until full payment is received from you. Invoices are payable upon receipt unless prior written approval is received from the RJY corporate offices.

3. Without prior written approval of RJY you may not assign any of your rights or obligations under this Agreement or allow a lien or encumbrance of any kind to be placed upon any products for which you have not received title free and clear.

4. If payment is not paid when due, you will pay us a late charge of up to 15% of the amount of the payment or $15.00 whichever is greater (or such lesser rate as is maximum rate allowed under applicable law). You also agree to pay $35.00 for each returned check. Restrictive endorsements or additional terms on checks you send to us will not reduce your obligations to us.

5. If payment is not paid when due, we will have the right to take ONE OR MORE of the following actions, in addition to any and all other remedies that may be available to us under the law: (a) cancel this agreement without prior notice or warning to you; (b) file a law suit against you to collect all past due amounts, plus all our reasonable legal costs, including but not limited to reasonable attorneys' fees, reasonable overhead for employee time spent on preparing for suit or attempting to collect payments and mitigate our damages; (c) repossess the Equipment or apply to a court for an order allowing repossession for any Equipment for which you have not received title free and clear.

6. This Agreement, and other terms and conditions that you have acknowledged receipt of by signing this Sales Order, constitute the entire Agreement.

7. As a convenience to you and to further expedite this transaction for you, you agree that a photocopy, electronic image or facsimile of this Agreement which includes a photocopy, electronic image or facsimile of the signatures of both parties shall be as valid, authentic and legally binding as the original version for all purposes and shall be admissible in court as final and conclusive evidence of this transaction and of the execution of this document.

SMP AND/OR MAINTENANCE AGREEMENT

The following terms and conditions are in addition to the General Terms and Conditions above.

8. Service includes both labor and material for adjustments, repairs and replacement of parts as necessitated by normal equipment usage. Also included are regularly scheduled preventive maintenance and emergency service subject to provisions. The charge is based on the original geographic installation location of the machine and RJY must be notified whenever the geographical location of the equipment is changed. If the equipment has been moved to a new RJY service zone, a new agreement must be reached. For efficient and electronic meter reading, RJY utilizes specialized software that reports current meter readings on all print devices connected to your Network. Customer agrees that meters may be accessed and reported in this manner. Should the number of scans exceed the total of all prints and copies, we reserve the right to invoice these excess scans at $.0025 per scan. This agreement does not cover overhauls on the machine.

9. Service calls will be made during normal business hours at the specified installation address. (Business hours are 8:00 a.m. to 5:00 p.m., Monday to Friday). Travel and labor time on calls made other than during normal business hours will be charged to Customer at established overtime rates.

10. Meter cards or fax forms will be provided to the Customer for monthly or quarterly billings. If forms are not received by the required date, an estimated meter will be used for billing purposes.

11. Customer agrees to make available a Meter Contact for training purposes in the use of the equipment and agrees to notify RJY of any change in the Meter Contact assignment.

12. Service will not be provided on equipment upon which there has been used unauthorized parts or supplies or that has been modified or used by unauthorized personnel to repair or change said equipment. Master or drums will not be replaced under this agreement when damage is caused by operator abuse or error. An initial master or drum charge may be required on older equipment.

13. This agreement shall be effective on the date of delivery of equipment if new equipment, otherwise on the commencement date listed on the contract and shall continue for a period of 12 months from the date and will automatically renew for consecutive 12 month periods unless written cancellation notice is given by either party 30 days prior to the end of the then current term. In the event of cancellation of this agreement for any reason, unused supplies shall be the property of RJY, although Customer may purchase the supplies at the then prevailing retail rates. Customer agrees to pay the periodic charges and upon failure to do so RJY may (1) terminate the agreement, (2) refuse to service the equipment or furnish supplies, (3) recover damages as a result thereof.

14. At the end of each contract anniversary date, the rate charge can increase without written notice to allow for cost increases.

15. This agreement is not refundable or transferrable to a third party. If the equipment is traded in on new equipment, any unused portion of the contract period charge shall be prorated and credited to the Customer.

16. This agreement may not be assigned by Customer without the written consent of RJY. This instrument contains the entire agreement between the parties and cannot be altered or amended except by an instrument in writing signed by the parties hereto. Any agreement containing variations from the printed terms set forth herein must be accepted and counter-signed by an officer of RJY at its offices in Nashville, Tennessee.

17. Sales or use tax shall be added where applicable.

City of Hattiesburg, MS

200 Forrest St.
P.O. Box 1898
Hattiesburg, MS 39401

Master

File Number: 2018-646

File ID:	2018-646	**Type:**	Regular Agenda Item	**Status:**	Approved
Version:	1	**Reference:**		**In Control:**	City Council
Requester:	Anthony Parker			**File Created:**	07/27/2018
Brief Title:	Agreement - State And Local HIDTA Task Force Agreement			**Final Action:**	
				Minute Book Number:	MB 20108-196

Title:

Acknowledge the execution of an agreement between the Hattiesburg Police Department and the United States Department of Justice, Drug Enforcement Administration (DEA) concerning the use and abuse of controlled substances under the provision of 21 U.S.C. 873.

Notes:

		Agenda Date:	08/07/2018
Indexes:		**Agenda Number:**	VII.-5
Sponsors:		**Enactment Date:**	
Attachments:	Agreement - DEA & HPD, Executed - Agreement - DEA & HPD	**Enactment Number:**	
Contact:		**Meeting Date:**	08/07/2018
Drafter:	Tammy Leggett	**Effective Date:**	

History of Legislative File

Version:	Acting Body:	Date:	Action:	Sent To:	Due Date:	Return Date:	Result:
1	City Council	08/07/2018	Approved on the Routine Agenda				Pass

Action Text: A MOTION was made by Council member George and seconded by Council member Brown to Ratify and confirm the execution of an agreement between the Hattiesburg Police Department and the United States Department of Justice, Drug Enforcement Administration (DEA) concerning the use and abuse of controlled substances under the provision of 21 U.S.C. 873.

There being no discussion, the Motion received the affirmative vote of the Council as follows:

Yeas: 5 - George, Delgado, Carroll, Dryden and Brown

Nays: 0

Yea: 5 Council Member George
Council Member Delgado
Council President Carroll
Council Vice President Dryden
Council Member Brown

Text of Legislative File 2018-646

Title

Acknowledge the execution of an agreement between the Hattiesburg Police Department and the United States Department of Justice, Drug Enforcement Administration (DEA) concerning the use and abuse of controlled substances under the provision of 21 U.S.C. 873.

Summary

Agreement - United States Department of Justice, Drug Enforcement Administration (DEA) and the Hattiesburg Police Department (HPD)

Budget Information

Expenditure Type

Purchasing Item

Publication Information

Drug Enforcement Administration
New Orleans Field Division
STATE AND LOCAL HIDTA TASK FORCE AGREEMENT
Mississippi - Hattiesburg

This agreement is made this 1st day of October 2018, between the United States Department of Justice, Drug Enforcement Administration (hereinafter "DEA"), and the Hattiesburg Police Department (hereinafter "HPD"). The DEA is authorized to enter into this cooperative agreement concerning the use and abuse of controlled substances under the provisions of 21 U.S.C. § 873.

Whereas there is evidence that trafficking in narcotics and dangerous drugs exists in the Hattiesburg area and that such illegal activity has a substantial and detrimental effect on the health and general welfare of the people of Mississippi, the parties hereto agree to the following:

1. The Hattiesburg HIDTA Task Force will perform the activities and duties described below:

a. disrupt the illicit drug traffic in the Hattiesburg area by immobilizing targeted violators and trafficking organizations;

b. gather and report intelligence data relating to trafficking in narcotics and dangerous drugs; and

c. conduct undercover operations where appropriate and engage in other traditional methods of investigation in order that the task force's activities will result in effective prosecution before the courts of the United States and the State of Mississippi.

2. To accomplish the objectives of the Hattiesburg HIDTA Task Force, the HPD agrees to detail one (1) experienced officer(s) to the Hattiesburg HIDTA Task Force for a period of not less than two years. During this period of assignment, the HPD officers will be under the direct supervision and control of DEA supervisory personnel assigned to the task force.

3. The HPD officers assigned to the task force shall adhere to all DEA policies and procedures. Failure to adhere to DEA policies and procedures shall be grounds for dismissal from the task force.

4. The HPD officers assigned to the task force shall be deputized as task force officers of DEA pursuant to 21 USC 878.

5. To accomplish the objectives of the Hattiesburg HIDTA Task Force, DEA will assign one (1) Special Agents to the task force. HIDTA will also, subject to the availability of annually appropriated funds or any continuing resolution thereof, provide necessary funds and equipment to support the activities of the DEA Special Agents and HPD officers assigned to the task force. This support will include: office space, office supplies travel funds, funds for the purchase of evidence and information, investigative equipment, training and other support items.

6. During the period of assignment to the Hattiesburg HIDTA Task Force, the HPD will remain responsible for establishing the salaries and benefits, including overtime, of the HPD officers assigned to the task force and for making all payments due them. HIDTA will, subject to availability of funds, reimburse the HPD for overtime payments made by it to the 1 officers assigned to the Hattiesburg HIDTA Task Force for overtime, up to a sum equivalent to 25 percent of the salary of a GS-12, Step 1 (RUS) federal employee, currently $18,343.75, per officer.

Note: Task Force Officer's overtime "Shall not include any costs for benefits, such as retirement, FICA, and other expenses."

7. In no event will the HPD charge any indirect cost rate to DEA for the administration or implementation of this agreement.

8. The **HPD** shall maintain on a current basis complete and accurate records and accounts of all obligations and expenditures of funds under this agreement in accordance with generally accepted accounting principles and instructions provided by DEA to facilitate on-site inspection and auditing of such records and accounts.

9. The **HPD** shall permit and have readily available for examination and auditing by DEA, the United States Department of Justice, the Comptroller General of the United States, and any of their duly authorized agents and representatives, any and all records, documents, accounts, invoices, receipts or expenditures relating to this agreement. The HPD shall maintain all such reports and records until all litigation, claim, audits and examinations are completed and resolved, or for a period of three (3) years after termination of this agreement, whichever is later.

10. The **HPD** shall comply with Title VI of the Civil Rights Act of 1964, Section 504 of the Rehabilitation Act of 1973, the Age Discrimination Act of 1975, as amended, and all requirements imposed by or pursuant to the regulations of the United States Department of Justice implementing those laws, 28 C.F.R. Part 42, Subparts C, F, G, H and I.

11. The **HPD** agrees that an authorized officer or employee will execute and return to DEA the attached OJP Form 4061/6, Certification Regarding Lobbying; Debarment, suspension and Other Responsibility Matters; and drug-Free Workplace Requirements. The **HPD** acknowledges that this agreement will not take effect and no federal funds will be awarded until the completed certification is received.

12. When issuing statements, press releases requests for proposals, bid solicitations and other documents describing projects or programs funded in whole or part with federal money, the HPD shall clearly state: (1) percentage of the total cost of the program or project which will be financed with federal money and (2) the dollar amount of federal funds for the program or project.

13. While on duty and acting on task force business, the officers assigned to the HIDTA task force shall be subject to all DEA and federal government rules, regulations and procedures governing the use of OGV's for home to work transportation and for personal business. The HIDTA Executive Committee acknowledges that the United States is liable for the actions of task force officer, while on duty and acting within the scope of their federal employment, to the extent permitted by the Federal Torts Claim Act.

14. The term of this agreement shall be effective from the date in paragraph number one until September 30, 2019. This agreement may be terminated by either party on 30 days advance written notice. Billing for all outstanding obligations must be received by DEA within 90 days of the date of termination of this agreement. HIDTA will be responsible only for obligations incurred by **HPD** during the term of this agreement.

For the Drug Enforcement Administration:

_____ Date: _____

Stephen G. Azzam

Special Agent in Charge

For the **Hattiesburg Police Department**

Anthony T. Parker Date: 7-18-2018

Name

Chief of Police

Title

U.S. DEPARTMENT OF JUSTICE
OFFICE OF JUSTICE PROGRAMS
OFFICE OF THE COMPTROLLER

CERTIFICATIONS REGARDING LOBBYING; DEBARMENT, SUSPENSION AND OTHER RESPONSIBILITY MATTERS; AND DRUG-FREE WORKPLACE REQUIREMENTS

Applicants should refer to the regulations cited below to determine the certification to which they are required to attest. Applicants should also review the instructions for certification included in the regulations before completing this from. Signature of this form provides for compliance with certification requirements under 28 CFR Part 69, "New Restrictions on Lobbying" and 28 CFR Part 67, "Government-wide Department and Suspension (Nonprocurement) and Government-wide Requirements for Drug-Free Workplace (Grants)." The certifications shall be treated as a material representation of fact upon reliance will be placed when the Department of Justice determines to award the covered transaction, grant, or cooperative agreement.

1. LOBBYING

As required by Section 1352, Title 31 of the U.S. Code, and implemented at 28 CFR Part 69, for persons entering into a grant or cooperative agreement over $100,000, as defined at 28 CFR Part 69, the applicant certifies that:

(a) No Federal appropriate funds have been paid or will be paid, by or on behalf of the undersigned, to any person for influencing or attempting to influence an officer or employee of any agency, a Member of Congress, an officer or employee of Congress, or an employee of a Member of Congress in connection with the making of any Federal grant, the entering into of any cooperative agreement, and extension, continuation, renewal, amendment, or modification of any Federal grant or cooperative agreement;

(b) If any funds other than Federal appropriated funds have been paid or will be paid to any person for influencing or attempting to influence an officer or employee of any agency, a Member of Congress, an officer or employee of Congress, or an employee of a Member of Congress in connection with this Federal grant or cooperative agreement, the undersigned shall complete and submit Standard Form - LLL, "Disclosure of Lobbying Activities," in accordance with its instructions;

(c) The undersigned shall require that the language of this certification be included in the award documents for all subawards at all tiers (including subgrants, contracts under grants and cooperative agreements, and subcontracts) and that all sub-recipients shall certify and disclose accordingly.

2. DEBARMENT, SUSPENSION, AND OTHER RESPONSIBILITY MATTERS (DIRECT RECIPIENT)

As required by Executive Order 12549, Debarment and Suspension, and implemented at 28 CFR Prt 67, for prospective participants in primary covered transactions, as defined at 28 CFR Part 67, Section 67.510-

A. The applicant certifies that it and its principals:

(a) Are not presently debarred, suspended, proposed for debarment, declared ineligible, sentenced to a denial of Federal benefits by a State or Federal court, or voluntarily excluded from covered transactions by any Federal department or agency;

(b) Have not within a three-year period preceding this application been convicted of or had a civil judgment rendered against them for commission of fraud or a criminal offense in connection with obtaining, attempting to obtain, or performing a public (Federal, State, or local) transaction or contract under a public transaction; violation of Federal or State antitrust statutes or commission of embezzlement, theft, forgery, bribery, falsification or destruction of records, making false statements, or receiving stolen property;

(c) Are not presently indicted for or otherwise criminally or civilly charged by a governmental entity (Federal, State, or local) with commission of any of the offenses enumerated in paragraph (1) (b) of this certification; and

(d) Have not within a three-year period preceding this application had one or more public transactions (Federal, State, or local) terminated for cause or default; and

B. Where the applicant is unable to certify to any of the statements in this certification, he or she shall attach an explanation to this application.

3. DRUG-FREE WORKPLACE (GRANTEES OTHER THAN INDIVIDUALS)

As required by the Drug-Free Workplace Act of 1988, and implemented at 28 CFR Part 67, Subpart F, for grantees, as defined at 28 CFR Part 67 Sections 67.615 and 67.620-

A. The applicant certifies that it will or will continue to provide a drug-free workplace by:

(a) Publishing a statement notifying employees that the unlawful manufacture, distribution, dispensing, possession, or use of a controlled substance is prohibited in the grantee's workplace and specifying the actions that will be taken against employees for violation of such prohibition;

(b) Establishing an on-going drug-free awareness program to inform employees about-

(1) The dangers of drugs abuse in the workplace;

(2) The grantee's policy of maintaining a drug-free workplace;

(3) Any available drug counseling, rehabilitation, and employee assistance programs; and

(4) The penalties that may be imposed upon employees for drug abuse violations occurring in the workplace;

(c) Making it a requirement that each employee to be engaged in the performance of the grant be given a copy of the statement required by paragraph (a);

(d) Notifying the employee in the statement required by paragraph (a) that, as a condition of employment under the grant, the employee will-

(1) Abide by the terms of the statement; and

(2) Notify the employer in writing of his or her conviction for a violation of a criminal drug statute occurring in the workplace no later than five calendar days after such conviction;

(e) Notifying the agency, in writing, within 10 calendar days after receiving notice under subparagraph (d)(2) from an employee or otherwise receiving actual notice of such conviction. Employers of convicted employees must provide notice, including position title, to: Department of Justice, Office of Justice Programs, ATTN: Control Desk, 633 Indiana Avenue, N.W., Washington, D.C. 20531. Notice shall include the identification number(s) of each affected grant;

(f) Taking one of the following actions, within 30 calendar days of receiving notice under subparagraph (d)(2), with respect to any employee who is so convicted-

(1) Taking appropriate personnel action against such an employee, up to and including termination, consistent with the requirements of the Rehabilitation Act of 1973, as amended; or

(2) Requiring such employee to participate satisfactorily in a drug abuse assistance or rehabilitation program approved for such purposes by a Federal, State, or local health, law enforcement, or other appropriate agency;

(g) Making a good faith effort to continue to maintain a drug- free workplace through implementation of paragraphs (a), (b), (c), (d), (e), and (f).

B. The grantee may insert in the space provided below the site (s) for the performance of work done in connection with the specific grant:

Place of Performance (Street address, city, country, state, zip code)

Check ☐ if there are workplace on file that are not identified here.

Section 67. 630 of the regulations provides that a grantee that is a State may elect to make one certification in each Federal fiscal year. A copy of which should be included with each application for Department of Justice funding. States and State agencies may elect to use OJP Form 4061/7.

Check ☐ if the State has elected to complete OJP Form 4061/7.

DRUG-FREE WORKPLACE (GRANTEES WHO ARE INDIVIDUALS)

As required by the Drug-Free Workplace Act of 1988, and implemented at 28 CFR Part 67, Subpart F, for grantees, as defined at 28 CFR Part 67; Sections 67.615 and 67.620-

A. As a condition of the grant, I certify that I will not engage in the unlawful manufacture, distribution, dispensing, possession, or use of a controlled substance in condition any activity with the grant; and

B. If convinced of a criminal drug offense resulting from a violation occurring during the conduct of any grant activity, I will report the conviction, in writing, within 10 calendar days of the conviction, to: Department of Justice, Office of Justice Programs, ATTN: Control Desk, 633 Indiana Avenue, N.W., Washington, D.C. 20531.

As the duly authorized representative of the applicant, I hereby certify that the applicant will comply with the above certifications.

1. Grantee Name and Address:

Hattiesburg police Department
300 Klondyke St, Hattiesburg, MS 39401

Hattiesburg HIDTA Task Force

2. Application Number and/or Project Name

3. Grantee IRS/Vendor Number

Anthony Parker, Chief

4. Typed Name and Title of Authorized Representative

Anthony T. Parker

7-18-2018

5. Signature

6. Date

Drug Enforcement Administration
New Orleans Field Division
STATE AND LOCAL HIDTA TASK FORCE AGREEMENT
Mississippi - Hattiesburg

This agreement is made this 1st day of October 2018, between the United States Department of Justice, Drug Enforcement Administration (hereinafter "DEA"), and the Hattiesburg Police Department (hereinafter "HPD"). The DEA is authorized to enter into this cooperative agreement concerning the use and abuse of controlled substances under the provisions of 21 U.S.C. § 873.

Whereas there is evidence that trafficking in narcotics and dangerous drugs exists in the Hattiesburg area and that such illegal activity has a substantial and detrimental effect on the health and general welfare of the people of Mississippi, the parties hereto agree to the following:

1. The Hattiesburg HIDTA Task Force will perform the activities and duties described below:

a. disrupt the illicit drug traffic in the Hattiesburg area by immobilizing targeted violators and trafficking organizations;

b. gather and report intelligence data relating to trafficking in narcotics and dangerous drugs; and

c. conduct undercover operations where appropriate and engage in other traditional methods of investigation in order that the task force's activities will result in effective prosecution before the courts of the United States and the State of Mississippi.

2. To accomplish the objectives of the Hattiesburg HIDTA Task Force, the HPD agrees to detail one (1) experienced officer(s) to the Hattiesburg HIDTA Task Force for a period of not less than two years. During this period of assignment, the HPD officers will be under the direct supervision and control of DEA supervisory personnel assigned to the task force.

3. The HPD officers assigned to the task force shall adhere to all DEA policies and procedures. Failure to adhere to DEA policies and procedures shall be grounds for dismissal from the task force.

4. The HPD officers assigned to the task force shall be deputized as task force officers of DEA pursuant to 21 USC 878.

5. To accomplish the objectives of the Hattiesburg HIDTA Task Force, DEA will assign one (1) Special Agents to the task force. HIDTA will also, subject to the availability of annually appropriated funds or any continuing resolution thereof, provide necessary funds and equipment to support the activities of the DEA Special Agents and HPD officers assigned to the task force. This support will include: office space, office supplies travel funds, funds for the purchase of evidence and information, investigative equipment, training and other support items.

6. During the period of assignment to the Hattiesburg HIDTA Task Force, the HPD will remain responsible for establishing the salaries and benefits, including overtime, of the HPD officers assigned to the task force and for making all payments due them. HIDTA will, subject to availability of funds, reimburse the HPD for overtime payments made by it to the 1 officers assigned to the Hattiesburg HIDTA Task Force for overtime, up to a sum equivalent to 25 percent of the salary of a GS-12, Step 1 (RUS) federal employee, currently $18,343.75, per officer.

Note: Task Force Officer's overtime "Shall not include any costs for benefits, such as retirement, FICA, and other expenses."

7. In no event will the HPD charge any indirect cost rate to DEA for the administration or implementation of this agreement.

8. The **HPD** shall maintain on a current basis complete and accurate records and accounts of all obligations and expenditures of funds under this agreement in accordance with generally accepted accounting principles and instructions provided by DEA to facilitate on-site inspection and auditing of such records and accounts.

9. The **HPD** shall permit and have readily available for examination and auditing by DEA, the United States Department of Justice, the Comptroller General of the United States, and any of their duly authorized agents and representatives, any and all records, documents, accounts, invoices, receipts or expenditures relating to this agreement. The HPD shall maintain all such reports and records until all litigation, claim, audits and examinations are completed and resolved, or for a period of three (3) years after termination of this agreement, whichever is later.

10. The **HPD** shall comply with Title VI of the Civil Rights Act of 1964, Section 504 of the Rehabilitation Act of 1973, the Age Discrimination Act of 1975, as amended, and all requirements imposed by or pursuant to the regulations of the United States Department of Justice implementing those laws, 28 C.F.R. Part 42, Subparts C, F, G, H and I.

11. The **HPD** agrees that an authorized officer or employee will execute and return to DEA the attached OJP Form 4061/6, Certification Regarding Lobbying; Debarment, suspension and Other Responsibility Matters; and drug-Free Workplace Requirements. The **HPD** acknowledges that this agreement will not take effect and no federal funds will be awarded until the completed certification is received.

12. When issuing statements, press releases requests for proposals, bid solicitations and other documents describing projects or programs funded in whole or part with federal money, the HPD shall clearly state: (1) percentage of the total cost of the program or project which will be financed with federal money and (2) the dollar amount of federal funds for the program or project.

13. While on duty and acting on task force business, the officers assigned to the HIDTA task force shall be subject to all DEA and federal government rules, regulations and procedures governing the use of OGV's for home to work transportation and for personal business. The HIDTA Executive Committee acknowledges that the United States is liable for the actions of task force officer, while on duty and acting within the scope of their federal employment, to the extent permitted by the Federal Torts Claim Act.

14. The term of this agreement shall be effective from the date in paragraph number one until September 30, 2019. This agreement may be terminated by either party on 30 days advance written notice. Billing for all outstanding obligations must be received by DEA within 90 days of the date of termination of this agreement. HIDTA will be responsible only for obligations incurred by **HPD** during the term of this agreement.

For the Drug Enforcement Administration:

_____ Date: _____

Stephen G. Azzam

Special Agent in Charge

For the **Hattiesburg Police Department**

Anthony T. Parker _____ Date: 7-18-2018

Name

Chief of Police

Title

U.S. DEPARTMENT OF JUSTICE
OFFICE OF JUSTICE PROGRAMS
OFFICE OF THE COMPTROLLER

CERTIFICATIONS REGARDING LOBBYING; DEBARMENT, SUSPENSION AND OTHER RESPONSIBILITY MATTERS; AND DRUG-FREE WORKPLACE REQUIREMENTS

Applicants should refer to the regulations cited below to determine the certification to which they are required to attest. Applicants should also review the instructions for certification included in the regulations before completing this from. Signature of this form provides for compliance with certification requirements under 28 CFR Part 69, "New Restrictions on Lobbying" and 28 CFR Part 67, "Government-wide Department and Suspension (Nonprocurement) and Government-wide Requirements for Drug-Free Workplace (Grants)." The certifications shall be treated as a material representation of fact upon reliance will be placed when the Department of Justice determines to award the covered transaction, grant, or cooperative agreement.

1. LOBBYING

As required by Section 1352, Title 31 of the U.S. Code, and implemented at 28 CFR Part 69, for persons entering into a grant or cooperative agreement over $100,000, as defined at 28 CFR Part 69, the applicant certifies that:

(a) No Federal appropriate funds have been paid or will be paid, by or on behalf of the undersigned, to any person for influencing or attempting to influence an officer or employee of any agency, a Member of Congress, an officer or employee of Congress, or an employee of a Member of Congress in connection with the making of any Federal grant, the entering into of any cooperative agreement, and extension, continuation, renewal, amendment, or modification of any Federal grant or cooperative agreement;

(b) If any funds other than Federal appropriated funds have been paid or will be paid to any person for influencing or attempting to influence an officer or employee of any agency, a Member of Congress, an officer or employee of Congress, or an employee of a Member of Congress in connection with this Federal grant or cooperative agreement, the undersigned shall complete and submit Standard Form - LLL, "Disclosure of Lobbying Activities," in accordance with its instructions;

(c) The undersigned shall require that the language of this certification be included in the award documents for all subawards at all tiers (including subgrants, contracts under grants and cooperative agreements, and subcontracts) and that all sub-recipients shall certify and disclose accordingly.

2. DEBARMENT, SUSPENSION, AND OTHER RESPONSIBILITY MATTERS (DIRECT RECIPIENT)

As required by Executive Order 12549, Debarment and Suspension, and implemented at 28 CFR Prt 67, for prospective participants in primary covered transactions, as defined at 28 CFR Part 67, Section 67.510-

A. The applicant certifies that it and its principals:

(a) Are not presently debarred, suspended, proposed for debarment, declared ineligible, sentenced to a denial of Federal benefits by a State or Federal court, or voluntarily excluded from covered transactions by any Federal department or agency;

(b) Have not within a three-year period preceding this application been convicted of or had a civil judgment rendered against them for commission of fraud or a criminal offense in connection with obtaining, attempting to obtain, or performing a public (Federal, State, or local) transaction or contract under a public transaction; violation of Federal or State antitrust statutes or commission of embezzlement, theft, forgery, bribery, falsification or destruction of records, making false statements, or receiving stolen property;

(c) Are not presently indicted for or otherwise criminally or civilly charged by a governmental entity (Federal, State, or local) with commission of any of the offenses enumerated in paragraph (1) (b) of this certification; and

(d) Have not within a three-year period preceding this application had one or more public transactions (Federal, State, or local) terminated for cause or default; and

B. Where the applicant is unable to certify to any of the statements in this certification, he or she shall attach an explanation to this application.

3. DRUG-FREE WORKPLACE (GRANTEES OTHER THAN INDIVIDUALS)

As required by the Drug-Free Workplace Act of 1988, and implemented at 28 CFR Part 67, Subpart F, for grantees, as defined at 28 CFR Part 67 Sections 67.615 and 67.620-

A. The applicant certifies that it will or will continue to provide a drug-free workplace by:

(a) Publishing a statement notifying employees that the unlawful manufacture, distribution, dispensing, possession, or use of a controlled substance is prohibited in the grantee's workplace and specifying the actions that will be taken against employees for violation of such prohibition;

(b) Establishing an on-going drug-free awareness program to inform employees about-

(1) The dangers of drugs abuse in the workplace;

(2) The grantee's policy of maintaining a drug-free workplace;

(3) Any available drug counseling, rehabilitation, and employee assistance programs; and

(4) The penalties that may be imposed upon employees for drug abuse violations occurring in the workplace;

(c) Making it a requirement that each employee to be engaged in the performance of the grant be given a copy of the statement required by paragraph (a);

(d) Notifying the employee in the statement required by paragraph (a) that, as a condition of employment under the grant, the employee will-

(1) Abide by the terms of the statement; and

(2) Notify the employer in writing of his or her conviction for a violation of a criminal drug statute occurring in the workplace no later than five calendar days after such conviction;

(e) Notifying the agency, in writing, within 10 calendar days after receiving notice under subparagraph (d)(2) from an employee or otherwise receiving actual notice of such conviction. Employers of convicted employees must provide notice, including position title, to: Department of Justice, Office of Justice Programs, ATTN: Control Desk, 633 Indiana Avenue, N.W., Washington, D.C. 20531. Notice shall include the identification number(s) of each affected grant;

(f) Taking one of the following actions, within 30 calendar days of receiving notice under subparagraph (d)(2), with respect to any employee who is so convicted-

(1) Taking appropriate personnel action against such an employee, up to and including termination, consistent with the requirements of the Rehabilitation Act of 1973, as amended; or

(2) Requiring such employee to participate satisfactorily in a drug abuse assistance or rehabilitation program approved for such purposes by a Federal, State, or local health, law enforcement, or other appropriate agency;

(g) Making a good faith effort to continue to maintain a drug- free workplace through implementation of paragraphs (a), (b), (c), (d), (e), and (f).

B. The grantee may insert in the space provided below the site (s) for the performance of work done in connection with the specific grant:

Place of Performance (Street address, city, country, state, zip code)

Check ☐ if there are workplace on file that are not identified here.

Section 67. 630 of the regulations provides that a grantee that is a State may elect to make one certification in each Federal fiscal year. A copy of which should be included with each application for Department of Justice funding. States and State agencies may elect to use OJP Form 4061/7.

Check ☐ if the State has elected to complete OJP Form 4061/7.

DRUG-FREE WORKPLACE (GRANTEES WHO ARE INDIVIDUALS)

As required by the Drug-Free Workplace Act of 1988, and implemented at 28 CFR Part 67, Subpart F, for grantees, as defined at 28 CFR Part 67; Sections 67.615 and 67.620-

A. As a condition of the grant, I certify that I will not engage in the unlawful manufacture, distribution, dispensing, possession, or use of a controlled substance in condition any activity with the grant; and

B. If convinced of a criminal drug offense resulting from a violation occurring during the conduct of any grant activity, I will report the conviction, in writing, within 10 calendar days of the conviction, to: Department of Justice, Office of Justice Programs, ATTN: Control Desk, 633 Indiana Avenue, N.W., Washington, D.C. 20531.

As the duly authorized representative of the applicant, I hereby certify that the applicant will comply with the above certifications.

1. Grantee Name and Address:

Hattiesburg police Department
300 Klondyke St, Hattiesburg, MS 39401
Hattiesburg HIDTA Task Force

2. Application Number and/or Project Name

3. Grantee IRS/Vendor Number

Anthony Parker, Chief

4. Typed Name and Title of Authorized Representative

Anthony D. Parker

7-18-2018

5. Signature

6. Date

City of Hattiesburg, MS

200 Forrest St.
P.O. Box 1898
Hattiesburg, MS 39401

Master

File Number: 2018-643

File ID:	2018-643	**Type:**	Regular Agenda Item	**Status:**	Approved
Version:	1	**Reference:**		**In Control:**	City Council
Requester:	Anthony Parker			**File Created:**	07/27/2018
Brief Title:	MOU-The Bureau of Alcohol, Tobacco, Firearms, and Explosives			**Final Action:**	
				Minute Book Number:	MB 2018-196

Title:

Acknowledge the execution of Memorandum of Understanding between the Bureau of Alcohol, Tobacco, FIrearms and Explosives (ATF) and the Hattiesburg Police Department to cooperate in elimating the illegal flow of firearms to the criminal element.

Notes:			
		Agenda Date:	08/07/2018
Indexes:		**Agenda Number:**	VII.-6
Sponsors:		**Enactment Date:**	
Attachments:	MOU-ATF & HPD, Executed MOU Hattiesburg PD ATF	**Enactment Number:**	
Contact:		**Meeting Date:**	08/07/2018
Drafter:	Tammy Leggett	**Effective Date:**	

History of Legislative File

Version:	Acting Body:	Date:	Action:	Sent To:	Due Date:	Return Date:	Result:
1	City Council	08/07/2018	Approved on the Routine Agenda				
	Action Text:	Approved on the Routine Agenda					

Text of Legislative File 2018-643

Title

Acknowledge the execution of Memorandum of Understanding between the Bureau of Alcohol, Tobacco, FIrearms and Explosives (ATF) and the Hattiesburg Police Department to cooperate in elimating the illegal flow of firearms to the criminal element.

Summary

MOU with The Bureau of Alcohol, Tobacco, Firearms and Explosives (ATF) and Hattiesburg Police Department (HPD)

Budget Information

Expenditure Type

Purchasing Item

Publication Information

MEMORANDUM OF UNDERSTANDING

BETWEEN

THE BUREAU OF ALCOHOL, TOBACCO, FIREARMS AND EXPLOSIVES (ATF),

AND

HATTIESBURG POLICE DEPARTMENT
(HPD)

This Memorandum of Understanding ("MOU") is entered into by and between the Bureau of Alcohol, Tobacco, Firearms and Explosives ("ATF") and the Hattiesburg **Police Department** (HPD) ("participating agencies") as it relates to the ATF Frontline Initiative and Criminal Gangs Task Force (herein referred to as Task Force/Project "A.R.E.S." (Armed-Offender Reduction & Enforcement Strategy)

- The parties signing this memorandum of understanding hereto agree that it is to their mutual benefit to cooperate in eliminating the illegal flow of firearms to the criminal element. The cooperation will involve the investigation and prosecution of those individuals, groups or gangs misusing firearms to commit violent crime and illegally trafficking firearms enable others to commit violent crime.

BACKGROUND

Firearms-related violence is one of this Nation's primary concerns. Firearms-related violence, spurred by an indifference to human life, is depleting the cultural and economic resources of our society and is eroding the basic quality of life for many Americans.

Despite the diligent efforts of law enforcement, illicit sources of firearms continue to be available to the criminal element. Some licensed firearms dealers are engaged in unlawful diversion and distribution of firearms. Other unlicensed individuals legitimately or, through the use of fraudulent identification or straw purchases or theft, illegitimately acquire firearms and illegally supply them to the criminal elements. As the number of violent crimes committed with firearms continues to increase nationwide, Federal, State, and local law enforcement officials must work together to effectively develop and implement enforcement strategies to combat this dangerous trend. Each party to this agreement recognizes that one of the most effective methods to identify illegal sources of firearms is through the systematic tracing of all recovered crime related firearms.

AUTHORITIES

Offenses investigated and enforced pursuant to this MOU are those falling within ATF's jurisdiction 28 U.S.C. § 599A; 27 CFR § 0.130 and specifically, the Gun Control Act of 1968, 18 U.S.C. §§ 921 et seq. and the National Firearms Act, 26 U.S.C. §§ 5861 et seq.

PURPOSE

The Task Force will perform the activities and duties described below:

a. Investigate firearms trafficking
b. Investigate firearms related violent crime to include drug trafficking
c. Gather and report intelligence data relating to trafficking in firearms
d. Conduct undercover operations where appropriate and engage in other traditional methods of proactive investigation in order that the Task Force's activities will result in effective prosecution of firearms related offenses before the courts of the United States and the State of Mississippi.
e. Conduct street level gun and drug interdiction.
f. Investigate all firearm offenses within the task forces area of responsibility.
g. Proactive enforcement in targeted areas.

MEASUREMENT OF SUCCESS

The success of this initiative will be measured by the participating agencies willingness to share certain information, (i.e. crime statistics) for the purpose of measuring the success of the task force as well as its performance.

Enforce Federal firearms laws in order to remove violent offenders from our communities, and keep firearms out of the hands of those prohibited by law from possessing them.

Performance Indicator:	Percent change in violent firearms crime in metropolitan areas with a substantial ATF presence (as compared with similar areas) as well as seizure of illegal firearms.
Performance Indicator:	Percentage of high-crime cities with an ATF presence demonstrating a reduction in violent firearms crime when compared to the national average.

SUPERVISION AND CONTROL

The day-to-day supervision and administrative control of designated special deputies (SD's) will continue to be the responsibility of the sponsoring agency (HPD), with the ATF Special Agent in Charge or his/her designee having operational control over all direct enforcement operations related to this Task Force.

Each SD shall remain subject to their respective agencies' policies, and shall report to their respective agencies regarding all matters unrelated to this agreement/taskforce. With regard to matters mutually deemed related to the function of this Task Force, SD's will be subject to Federal law and Department of Justice (DOJ) and ATF orders, regulations and policy, including those related to standards of conduct, sexual harassment, equal opportunity issues and Federal disclosure laws. Failure to comply with this paragraph could result in a SD's dismissal from the Task Force.

PERSONNEL, RESOURCES AND SUPERVISION

To accomplish the objectives of the Task Force, ATF will assign Special Agents to the Task Force. ATF will also, subject to the availability of funds, provide necessary funds and equipment to support the activities of the ATF Special Agents and officers assigned to the Task Force. This support may include: office space, office supplies, travel funds, funds for the purchase of evidence and information, investigative equipment, training and other support items.

Each participating agency agrees to make available to their assigned task members any equipment ordinarily assigned for use by that agency. In the event ATF supplies equipment (which may include vehicles, weapons or radios); SD's must abide by any applicable ATF property orders or policy, and may be required to enter into a separate agreement for their use.

To accomplish the objectives of the Task Force, the **Hattiesburg Police Department** agrees to detail two (2) part time Special Deputies to the Task Force for a period of not less than two (2) years. This term may be amended will the approval of both agencies, or in the circumstance that the agencies mutually agree to designate one or both of these SD's as a Task Force Officer.

All SD's shall qualify with their respective firearms by complying with ATF's Firearms and Weapons Policy.

SECURITY CLEARANCES

All SD's will undergo a security clearance and background investigation and ATF shall bear the costs associated with those investigations. SD's must not be the subject of any ongoing investigation by their department or any other law enforcement agency, and past behavior or punishment, disciplinary, punitive or otherwise, may disqualify one from eligibility to join the Task Force. ATF has final authority as to the suitability of SD's for inclusion on the Task Force.

DEPUTIZATION

ATF, as the sponsoring Federal law enforcement agency, may request at its sole discretion that the participating agency's SD's be deputized by the U.S. Marshals Service to extend their jurisdiction, to include applying for and executing Federal search and arrest warrants, and requesting and executing Federal grand jury subpoenas for records and evidence involving violations of Federal laws. Such requests will be made on an individual basis as determined by ATF.

The participating agencies agree that any Federal authority that may be conferred by a deputation is limited to activities supervised by ATF and will terminate when this MOU is terminated or when the Special Deputies leave the Task Force, or at the discretion of ATF.

ASSIGNMENTS, REPORTS AND INFORMATION SHARING

An ATF supervisor or designee will be empowered with designated oversight for investigative and personnel matters related to the Task Force and will be responsible for opening, monitoring, directing and closing Task Force investigations in accordance with ATF policy and the applicable United States Attorney General's Guidelines.

Assignments will be based on, but not limited to, experience, training and performance, in addition to the discretion of the ATF supervisor.

All investigative reports on cases anticipated being brought for federal prosecution will be prepared utilizing ATF's investigative case management system (N-Force) utilizing ATF case report numbers. The participating agency will share investigative reports, findings, intelligence, etc., in furtherance of the mission of this agreement, to the fullest extent allowed by law. For the purposes of uniformity, there will be no duplication of reports, but rather a single report prepared by a designated individual which can be duplicated as necessary. Every effort should be made to document investigative activity on ATF Reports of Investigation (ROI), unless otherwise agreed to by ATF and the participating agency(ies). This section does not preclude the necessity of individual SD's to complete forms required by their employing agency.

Information will be freely shared among the SD's and ATF personnel with the understanding that all investigative information will be kept strictly confidential and will only be used in furtherance of criminal investigations. No information gathered during the course of the Task Force, to include informal communications between SD's and ATF personnel, may be disseminated to any third party, not-task force member by any task force member without the express permission of the ATF Special Agent in Charge of his/her designee (RAC Denham).

Any public request for access to the records or any disclosures of information obtained by task force members during Task Force investigations will be handled in accordance with applicable statutes,

regulations and policies pursuant to the Freedom of Information Act and the Privacy Act and other applicable federal and/or state statutes and regulations.

INVESTIGATIVE METHODS

The parties agree to utilize Federal standards pertaining to evidence handling and electronic surveillance activities to the greatest extent possible. However, in situations where state or local laws are more restrictive than comparable Federal law, investigative methods employed by state and local law enforcement agencies shall conform to those requirements, pending a decision as to a venue for prosecution.

The use of other investigative methods (search warrants, interceptions of oral communications, etc.) and reporting procedures in connection therewith will be consistent with the policy and procedures of ATF. All Task Force operations will be conducted and reviewed in accordance with applicable ATF and Department of Justice policy and guidelines.

INFORMANTS

ATF and HPD guidelines and policy regarding the operation of informants and cooperating witnesses will apply to all informants and cooperating witnesses in the performance of this Task Force.

Informants developed by SD's may be registered as informants of their respective agencies for administrative purposes and handling. The policies and procedures of the participating agency with regard to handling informants will apply to all informants that the participating agency registers. In addition, it will be incumbent upon the registering participating agency to maintain a file with respect to the performance of all informants or witnesses it registers. All information obtained from an informant and relevant to matters within the jurisdiction of this MOU will be shared with all parties to this MOU. The registering agency will pay all reasonable and necessary informant expenses for each informant that a participating agency registers.

DECONFLICTION

Each participating agency agrees that the deconfliction process requires the sharing of certain operational information with the Task Force, which, if disclosed to unauthorized persons, could endanger law enforcement personnel and the public. As a result of this concern, each participating agency agrees to adopt security measures set forth herein:

a. Each participating agency will assign primary and secondary points of contact.
b. Each participating agency agrees to keep its points of contact list updated.

The points of contact for this Task Force are:

ATF: RAC Jason Denham, S/A Michael Knoll.

Participating Agency: Anthony Parker (Chief HPD) & Brandon McLemore (HPD Captain).

EVIDENCE

All non-narcotics and firearms evidence will be maintained by the lead agency having jurisdiction in the court system intended for prosecution. All narcotics evidence will be processed and maintained by HPD/ATF in accordance with their respective policy. Any firearms related evidence that is anticipated to be used to charge a federal crime or further develop an investigation for federal prosecution will be maintained by ATF. All evidence generated from investigations initiated by a SD or ATF Special Agent assigned to this Task Force that is intended for Federal prosecution will be placed in the ATF designated vault, using the procedures found in ATF orders.

All firearms seized by a SD must be submitted for fingerprint analysis and for a National Integrated Ballistics Information Network (NIBIN) examination. Once all analyses are completed, all firearms seized under Federal law shall be placed into the ATF designated vault for proper storage. All firearms information/descriptions taken into ATF custody must be submitted to ATF's National Tracing Center.

JURISDICTION/PROSECUTIONS

Cases will be reviewed by the ATF Special Agent in Charge or his/her designee in consultation with the participating agency and the United States Attorney's Office and appropriate State's attorney offices, to determine whether cases will be referred for prosecution to the U.S. Attorney's Office or to the relevant State's attorney's office. This determination will be based upon which level of prosecution will best serve the interests of justice and the greatest overall benefit to the public. Any question that arises pertaining to prosecution will be resolved through discussion among the investigative agencies and prosecuting entities having an interest in the matter.

In the event that a state or local matter is developed that is outside the jurisdiction of ATF or it is decided that a case will be prosecuted on the state or local level, ATF will provide all relevant information to state and local authorities, subject to Federal law. Whether to continue investigation of state and local crimes is at the sole discretion of the state or local participating agency.

USE OF FORCE

All part time Special Deputies will fully comply with ATF and the Department of Justice's (DOJ's) use of force policies during Task Force affiliated enforcement activities, unless a TFO/TFAs agency's Use of Force policy is more restrictive, in which case the TFO/TFA may use their respective agency's use of force policy. TFO/TFAs must be briefed on ATF's and DOJ's use of force policy by an ATF official, and will be provided with a copy of such policy.

MEDIA

Media relations will be handled by ATF and the U.S. Attorney's Office's public information officers in coordination with each participating agency. Information for press releases will be reviewed and mutually agreed upon by all participating agencies, who will take part in press conferences. Assigned personnel will be informed not to give statements to the media Concerning any ongoing investigation or prosecution under this MOU without the concurrence of the other participants and, when appropriate, the relevant prosecutor's office.

All personnel from the participating agencies shall strictly adhere to the requirements of Title 26, U.S.C. § 6103. Disclosure of tax return information and tax information acquired during the course of investigations involving National Firearms Act (NFA) firearms as defined in 26 U.S.C. Chapter 53 shall not be made except as provided by law.

SALARY/OVERTIME COMPENSATION

During the period of the MOU, participating agencies will provide for the salary and employment benefits of their respective employees. All participating agencies will retain control over their employees work hours, including the approval of overtime.

ATF may have funds available to reimburse overtime to the State and Local TFO/TFA's agency, subject to the guidelines of the Department of Justice Asset Forfeiture Fund. This funding would be available under the terms of a memorandum of agreement (MOA) established pursuant to the provisions of28 U.S.C. § 524. The participating agency agrees to abide by the applicable Federal law and policy with regard to the payment of overtime from the Department of Justice Asset Forfeiture Fund. The participating agency must be recognized under State law as a law enforcement agency and their officers/troopers/investigators as sworn law enforcement officers. If required or requested, the participating agency shall be responsible for demonstrating to the Department of Justice that its personnel are law enforcement officers for the purpose of overtime payment from the Department of Justice Asset Forfeiture Fund. <u>This MOU is not a funding document.</u>

In accordance with these provisions and any MOA on asset forfeiture, the ATF Special Agent in Charge or designee shall be responsible for certifying reimbursement requests for overtime expenses incurred as a result of this agreement.

AUDIT INFORMATION

Operations under this MOU are subject to audit by ATF, the Department of Justice's Office of the Inspector General, the Government Accountability Office, and other Government designated auditors. Participating agencies agree to permit such audits and to maintain all records relating to Department of Justice Asset Forfeiture Fund payments for expenses either incurred during the course of this Task Force or for a period of not less than three (3) years and, if an audit is being conducted, until such time that the audit is officially completed, whichever is greater.

FORFEITURES/SEIZURES

All assets seized for administrative forfeiture will be seized and forfeited in compliance with the rules and regulations set forth by the U.S Department of Justice Asset Forfeiture guidelines. When the size or composition of the item(s) seized make it impossible for ATF to store it, any of the participating agencies having the storage facilities to handle the seized property agree to store the property at no charge and to maintain the property in the same condition as when it was first taken into custody. The agency storing said seized property agrees not to dispose of the property until authorized to do so by ATF.

The MOU provides that proceeds from forfeitures will be shared, with sharing percentages based upon the U.S. Department of Justice Asset Forfeiture policies on equitable sharing of assets, such as determining the level of involvement by each participating agency.

TERMINATION

The MOU shall be deemed terminated at the time all participating agencies withdraw and ATF elects not to replace such members, or in the event ATF unilaterally terminates the MOU upon 90 days written notice to all the remaining participating agencies.

MODIFICATIONS

This agreement may be modified at any time by written consent of all participating agencies. Modifications shall have no force and effect unless such modifications are reduced to writing and signed by an authorized representative of each participating agency.

Anthony Parker	Dana Nichols
Chief	ATF, Special Agent in Charge

07-25-2018
Date

Date

ORIGINAL

MEMORANDUM OF UNDERSTANDING

BETWEEN

THE BUREAU OF ALCOHOL, TOBACCO, FIREARMS AND EXPLOSIVES (ATF),

AND

HATTIESBURG POLICE DEPARTMENT
(HPD)

This Memorandum of Understanding ("MOU") is entered into by and between the Bureau of Alcohol, Tobacco, Firearms and Explosives ("ATF") and the Hattiesburg **Police Department** (HPD) ("participating agencies") as it relates to the ATF Frontline Initiative and Criminal Gangs Task Force (herein referred to as Task Force/Project "A.R.E.S." (Armed-Offender Reduction & Enforcement Strategy)

- The parties signing this memorandum of understanding hereto agree that it is to their mutual benefit to cooperate in eliminating the illegal flow of firearms to the criminal element. The cooperation will involve the investigation and prosecution of those individuals, groups or gangs misusing firearms to commit violent crime and illegally trafficking firearms enable others to commit violent crime.

BACKGROUND

Firearms-related violence is one of this Nation's primary concerns. Firearms-related violence, spurred by an indifference to human life, is depleting the cultural and economic resources of our society and is eroding the basic quality of life for many Americans.

Despite the diligent efforts of law enforcement, illicit sources of firearms continue to be available to the criminal element. Some licensed firearms dealers are engaged in unlawful diversion and distribution of firearms. Other unlicensed individuals legitimately or, through the use of fraudulent identification or straw purchases or theft, illegitimately acquire firearms and illegally supply them to the criminal elements. As the number of violent crimes committed with firearms continues to increase nationwide, Federal, State, and local law enforcement officials must work together to effectively develop and implement enforcement strategies to combat this dangerous trend. Each party to this agreement recognizes that one of the most effective methods to identify illegal sources of firearms is through the systematic tracing of all recovered crime related firearms.

AUTHORITIES

Offenses investigated and enforced pursuant to this MOU are those falling within ATF's jurisdiction 28 U.S.C. § 599A; 27 CFR § 0.130 and specifically, the Gun Control Act of 1968. 18 U.S.C. §§ 921 et seq., 3051 and the National Firearms Act, 26 U.S.C. §§ 5861 et

seq. **PURPOSE**

The Task Force will perform the activities and duties described below:

a. Investigate firearms trafficking
b. Investigate firearms related violent crime to include drug trafficking
c. Gather and report intelligence data relating to trafficking in firearms
d. Conduct undercover operations where appropriate and engage in other traditional methods of proactive investigation in order that the Task Force's activities will result in effective prosecution of firearms related offenses before the courts of the United States and the State of Mississippi.
e. Conduct street level gun and drug interdiction.
f. Investigate all firearm offenses within the task forces area of responsibility.
g. Proactive enforcement in targeted areas.

MEASUREMENT OF SUCCESS

The success of this initiative will be measured by the participating agencies willingness to share certain information. (i.e. crime statistics) for the purpose of measuring the success of the task force as well as its performance.

Enforce Federal firearms laws in order to remove violent offenders from our communities, and keep firearms out of the hands of those prohibited by law from possessing them.

Performance Indicator:	Percent change in violent firearms crime in metropolitan areas with a substantial ATF presence (as compared with similar areas) as well as seizure of illegal firearms.
Performance Indicator:	Percentage of high-crime cities with an ATF presence demonstrating a reduction in violent firearms crime when compared to the national average.

SUPERVISION AND CONTROL

The day-to-day supervision and administrative control of designated special deputies (SD's) will continue to be the responsibility of the sponsoring agency (HPD), with the ATF Special Agent in Charge or his/her designee having operational control over all direct enforcement operations related to this Task Force.

Each SD shall remain subject to their respective agencies' policies, and shall report to their respective agencies regarding all matters unrelated to this agreement/taskforce. With regard to matters mutually deemed related to the function of this Task Force, SD's will be subject to Federal law and Department of Justice (DOJ) and ATF orders, regulations and policy, including those related to standards of conduct, sexual harassment, equal opportunity issues and Federal disclosure laws. Failure to comply with this paragraph could result in a SD's dismissal from the Task Force.

PERSONNEL, RESOURCES AND SUPERVISION

To accomplish the objectives of the Task Force, ATF will assign Special Agents to the Task Force. ATF will also, subject to the availability of funds, provide necessary funds and equipment to support the activities of the ATF Special Agents and officers assigned to the Task Force. This support may include: office space, office supplies, travel funds, funds for the purchase of evidence and information, investigative equipment, training and other support items.

Each participating agency agrees to make available to their assigned task members any equipment ordinarily assigned for use by that agency. In the event ATF supplies equipment (which may include vehicles, weapons or radios); SD's must abide by any applicable ATF property orders or policy, and may be required to enter into a separate agreement for their use.

To accomplish the objectives of the Task Force, the **Hattiesburg Police Department** agrees to detail two (2) part time Special Deputies to the Task Force for a period of not less than two (2) years. This term may be amended will the approval of both agencies, or in the circumstance that the agencies mutually agree to designate one or both of these SD's as a Task Force Officer.

All SD's shall qualify with their respective firearms by complying with ATF's Firearms and Weapons Policy.

SECURITY CLEARANCES

All SD's will undergo a security clearance and background investigation and ATF shall bear the costs associated with those investigations. SD's must not be the subject of any ongoing investigation by their department or any other law enforcement agency, and past behavior or punishment, disciplinary, punitive or otherwise, may disqualify one from eligibility to join the Task Force. ATF has final authority as to the suitability of SD's for inclusion on the Task Force.

DEPUTIZATION

ATF, as the sponsoring Federal law enforcement agency, may request at its sole discretion that the participating agency's SD's be deputized by the U.S. Marshals Service to extend their jurisdiction, to include applying for and executing Federal search and arrest warrants, and requesting and executing Federal grand jury subpoenas for records and evidence involving violations of Federal laws. Such requests will be made on an individual basis as determined by ATF.

The participating agencies agree that any Federal authority that may be conferred by a deputation is limited to activities supervised by ATF and will terminate when this MOU is terminated or when the Special Deputies leave the Task Force, or at the discretion of ATF.

ASSIGNMENTS, REPORTS AND INFORMATION SHARING

An ATF supervisor or designee will be empowered with designated oversight for investigative and personnel matters related to the Task Force and will be responsible for opening, monitoring, directing and closing Task Force investigations in accordance with ATF policy and the applicable United States Attorney General's Guidelines.

Assignments will be based on, but not limited to, experience, training and performance, in addition to the discretion of the ATF supervisor.

All investigative reports will be prepared utilizing ATF's investigative case management system, (N-Force) utilizing ATF case report numbers. The participating agency will share investigative reports, findings, intelligence, etc., in furtherance of the mission of this agreement, to the fullest extent allowed by law. For the purposes of uniformity, there will be no duplication of reports, but rather a single report prepared by a designated individual which can be duplicated as necessary. Every effort should be made to document investigative activity on ATF Reports of Investigation (ROI), unless otherwise agreed to by ATF and the participating agency(ies). This section does not preclude the necessity of individual TFO/TFAs to complete forms required by their employing agency.

Information will be freely shared among the TFO/TFAs and ATF personnel with the understanding that all investigative information will be kept strictly confidential and will only be used in furtherance of criminal investigations. No information gathered during the course of the Task Force, to include informal communications between TFO/TFAs and ATF personnel, may be disseminated to any third party, not-task force member by any task force member without the express permission of the ATF Special Agent in Charge of his/her designee.

Any public request for access to the records or any disclosures of information obtained by task force members during Task Force investigations will be handled in accordance with applicable statutes, regulations and policies pursuant to the Freedom of Information Act and the Privacy Act and other applicable federal and/or state statutes and regulations.

INVESTIGATIVE METHODS

The parties agree to utilize Federal standards pertaining to evidence handling and electronic surveillance activities to the greatest extent possible. However, in situations where state or local laws are more restrictive than comparable Federal law, investigative methods employed by state and local law enforcement agencies shall conform to those requirements, pending a decision as to a venue for prosecution.

The use of other investigative methods (search warrants, interceptions of oral communications, etc.) and reporting procedures in connection therewith will be consistent with the policy and procedures of ATF. All Task Force operations will be conducted and reviewed in accordance with applicable ATF and Department of Justice policy and guidelines.

INFORMANTS

ATF and HPD guidelines and policy regarding the operation of informants and cooperating witnesses will apply to all informants and cooperating witnesses in the performance of this Task Force.

Informants developed by SD's may be registered as informants of their respective agencies for administrative purposes and handling. The policies and procedures of the participating agency with regard to handling informants will apply to all informants that the participating agency registers. In addition, it will be incumbent upon the registering participating agency to maintain a file with respect to the performance of all informants or witnesses it registers. All information obtained from an informant and relevant to matters within the jurisdiction of this MOU will be shared with all parties to this MOU. The registering agency will pay all reasonable and necessary informant expenses for each informant that a participating agency registers.

DECONFLICTION

Each participating agency agrees that the deconfliction process requires the sharing of certain operational information with the Task Force, which, if disclosed to unauthorized persons, could endanger law enforcement personnel and the public. As a result of this concern, each participating agency agrees to adopt security measures set forth herein:

a. Each participating agency will assign primary and secondary points of contact.
b. Each participating agency agrees to keep its points of contact list updated.

The points of contact for this Task Force are:

ATF: RAC Jason Denham, S/A Michael Knoll.

Participating Agency: Anthony Parker (Chief HPD) & Brandon McLemore (HPD Captain).

EVIDENCE

All non-narcotics and firearms evidence will be maintained by the lead agency having jurisdiction in the court system intended for prosecution. All narcotics evidence will be processed and maintained by HPD/ATF in accordance with their respective policy. Any firearms related evidence that is anticipated to be used to charge a federal crime or further develop an investigation for federal prosecution will be maintained by ATF. All evidence generated from investigations initiated by a SD or ATF Special Agent assigned to this Task Force that is intended for Federal prosecution will be placed in the ATF designated vault, using the procedures found in ATF orders.

All firearms seized by a SD must be submitted for fingerprint analysis and for a National Integrated Ballistics Information Network (NIBIN) examination. Once all analyses are completed, all firearms seized under Federal law shall be placed into the ATF designated vault for proper storage. All firearms information/descriptions taken into ATF custody must be submitted to ATF's National Tracing Center.

JURISDICTION/PROSECUTIONS

Cases will be reviewed by the ATF Special Agent in Charge or his/her designee in consultation with the participating agency and the United States Attorney's Office and appropriate State's attorney offices, to determine whether cases will be referred for prosecution to the U.S. Attorney's Office or to the relevant State's attorney's office. This determination will be based upon which level of prosecution will best serve the interests of justice and the greatest overall benefit to the public. Any question that arises pertaining to prosecution will be resolved through discussion among the investigative agencies and prosecuting entities having an interest in the matter.

In the event that a state or local matter is developed that is outside the jurisdiction of ATF or it is decided that a case will be prosecuted on the state or local level, ATF will provide all relevant information to state and local authorities, subject to Federal law. Whether to continue investigation of state and local crimes is at the sole discretion of the state or local participating agency.

USE OF FORCE

All part time Special Deputies will fully comply with ATF and the Department of Justice's (DOJ's) use of force policies during Task Force affiliated enforcement activities, unless a TFO/TFAs agency's Use of Force policy is more restrictive, in which case the TFO/TFA may use their respective agency's use of force policy. TFO/TFAs must be briefed on ATF's and DOJ's use of force policy by an ATF official, and will be provided with a copy of such policy.

MEDIA

Media relations will be handled by ATF and the U.S. Attorney's Office's public information officers in coordination with each participating agency. Information for press releases will be reviewed and mutually agreed upon by all participating agencies, who will take part in press conferences. Assigned personnel will be informed not to give statements to the media Concerning any ongoing investigation or prosecution under this MOU without the concurrence of the other participants and, when appropriate, the relevant prosecutor's office.

All personnel from the participating agencies shall strictly adhere to the requirements of Title 26, U.S.C. § 6103. Disclosure of tax return information and tax information acquired during the course of investigations involving National Firearms Act (NFA) firearms as defined in 26 U.S.C. Chapter 53 shall not be made except as provided by law.

SALARY/OVERTIME COMPENSATION

During the period of the MOU, participating agencies will provide for the salary and employment benefits of their respective employees. All participating agencies will retain control over their employees work hours, including the approval of overtime.

ATF may have funds available to reimburse overtime to the State and Local TFO/TFA's agency, subject to the guidelines of the Department of Justice Asset Forfeiture Fund. This funding would be available under the terms of a memorandum of agreement (MOA) established pursuant to the provisions of 28 U.S.C. § 524. The participating agency agrees to abide by the applicable Federal law and policy with regard to the payment of overtime from the Department of Justice Asset Forfeiture Fund. The participating agency must be recognized under State law as a law enforcement agency and their officers/troopers/investigators as sworn law enforcement officers. If required or requested, the participating agency shall be responsible for demonstrating to the Department of Justice that its personnel are law enforcement officers for the purpose of overtime payment from the Department of Justice Asset Forfeiture Fund. <u>This MOU is not a funding document.</u>

In accordance with these provisions and any MOA on asset forfeiture, the ATF Special Agent in Charge or designee shall be responsible for certifying reimbursement requests for overtime expenses incurred as a result of this agreement.

AUDIT INFORMATION

Operations under this MOU are subject to audit by ATF, the Department of Justice's Office of the Inspector General, the Government Accountability Office, and other Government designated auditors. Participating agencies agree to permit such audits and to maintain all records relating to Department of Justice Asset Forfeiture Fund payments for expenses either incurred during the

course of this Task Force or for a period of not less than three (3) years and, if an audit is being conducted, until such time that the audit is officially completed, whichever is greater.

FORFEITURES/SEIZURES

All assets seized for administrative forfeiture will be seized and forfeited in compliance with the rules and regulations set forth by the U.S Department of Justice Asset Forfeiture guidelines. When the size or composition of the item(s) seized make it impossible for ATF to store it, any of the participating agencies having the storage facilities to handle the seized property agree to store the property at no charge and to maintain the property in the same condition as when it was first taken into custody. The agency storing said seized property agrees not to dispose of the property until authorized to do so by ATF.

The MOU provides that proceeds from forfeitures will be shared, with sharing percentages based upon the U.S. Department of Justice Asset Forfeiture policies on equitable sharing of assets, such as determining the level of involvement by each participating agency.

DISPUTE RESOLUTION

In cases of overlapping jurisdiction, the participating agencies agree to work in concert to achieve the Task Force's goals and objectives. The parties to this MOU agree to attempt to resolve any disputes regarding jurisdiction, case assignments and workload at the lowest level possible.

LIABILITY

ATF acknowledges that the United States is liable for the wrongful or negligent acts or omissions of its officers and employees, including TFOs, while on duty and acting within the scope of their federal employment, to the extent permitted by the Federal Tort Claims Act.

Claims against the United States for injury or loss of property, personal injury, or death arising or resulting from the negligent or wrongful act or omission of any Federal employee while acting within the scope of his or her office or employment are governed by the Federal Tort Claims Act, 28 U.S.C. sections 1346(b), 2672-2680 (unless the claim arises from a violation of the Constitution of the United States, or a violation of a statute of the United States under which other recovery is authorized).

Except as otherwise provided, the parties agree to be solely responsible for the negligent or wrongful acts or omissions of their respective employees and will not seek financial contributions from the other for such acts or omissions. Legal representation by the United States is determined by the United States Department of Justice on a case-by-case basis. ATF cannot guarantee the United States will provide legal representation to any State or local law enforcement officer.

Liability for any negligent or willful acts of any agent or officer undertaken outside the terms of this MOU will be the sole responsibility of the respective agent or officer and agency involved.

DURATION

This MOU shall remain in effect until it is terminated in writing (to include electronic mail and facsimile). All participating agencies agree that no agency shall withdraw from the Task Force without providing ninety (90) days written notice to other participating agencies. If any

participating agency withdraws from the Task Force prior to its termination, the remaining participating agencies shall determine the distributive share of assets for the withdrawing agency, in accordance with Department of Justice guidelines and directives.

The MOU shall be deemed terminated at the time all participating agencies withdraw and ATF elects not to replace such members, or in the event ATF unilaterally terminates the MOU upon 90 days written notice to all the remaining participating agencies.

MODIFICATIONS

This agreement may be modified at any time by written consent of all participating agencies. Modifications shall have no force and effect unless such modifications are reduced to writing and signed by an authorized representative of each participating agency.

SIGNATURES

Anthony Parker

Chief

Hattiesburg Police Department

9-28-18

Date

for Dana Nichols

ATF, Special Agent in Charge

New Orleans Field Division

9/18/18

Date

City of Hattiesburg, MS

200 Forrest St.
P.O. Box 1898
Hattiesburg, MS 39401

Master

File Number: 2018-635

File ID:	2018-635	**Type:**	Regular Agenda Item	**Status:**	Approved
Version:	1	**Reference:**		**In Control:**	City Council
Requester:	Anthony Parker			**File Created:**	07/16/2018
Brief Title:	Donation by Chip N Fore Heroes			**Final Action:**	
				Minute Book Number:	MB 2018-197

Title:

Acknowledge donation of $7,000.00 from Chip N Fore Heroes to the Hattiesburg Police Department STAR team, to purchase two (2) Model 700 PCR 308 Bolt Rifles.
.

Notes:

		Agenda Date:	08/07/2018
Indexes:		**Agenda Number:**	VII.-7
Sponsors:		**Enactment Date:**	
Attachments:	Chip N Fore Heroes Donation, Chip N Fore Heroes Check	**Enactment Number:**	
Contact:		**Meeting Date:**	08/07/2018
Drafter:	Tammy Leggett	**Effective Date:**	

History of Legislative File

Version:	Acting Body:	Date:	Action:	Sent To:	Due Date:	Return Date:	Result:
1	City Council	08/07/2018	Approved on the Routine Agenda				
	Action Text:	Approved on the Routine Agenda					

Text of Legislative File 2018-635

Title

Acknowledge donation of $7,000.00 from Chip N Fore Heroes to the Hattiesburg Police Department STAR team, to purchase two (2) Model 700 PCR 308 Bolt Rifles.
.

Summary

This memo is to request Council approval for a donation in the amount of $7,000.00 from Chip N Fore Heroes. The money will be used to purchase two (2) Model 700 PCR 308 Bolt Rifles

Budget Information

Expenditure Type

Purchasing Item

Publication Information

THE CITY OF HATTIESBURG

One of America's Great Small Cities!

Anthony Parker, Chief of Police

MEMORANDUM

TO: Mayor and Council

FROM: Chief Anthony Parker

DATE: July 5, 2018

RE: **Chip N Fore Heroes**

This memo is to request Council approval for a donation in the amount of $7,000.00 from Chip N Fore Heroes. This donation will be used to purchase two (2) Model 700 PCR 308 Bolt Rifles to be used by the Hattiesburg Police Department STAR team in active shooter situations.

AP/tl

Attachment

(601) 544-7900 POLICE DEPARTMENT FAX (601) 545-4952
#1 GOVERNMENT PLAZA • HATTIESBURG, MS 39401
CRIME STOPPERS (601) 582-STOP (582-7867) CELLULAR H C.S.

July 9th, 2018

Chip N Fore Heroes
Jessica Maholm & Lauren Shifalo
135 Wild Meadows
Hattiesburg, MS 39402

The Chip N Fore Heroes was started in 2015 as a golf tournament to support community first responders and their families, after the passing of Officers Benjamin Deen and Liquori Tate. Over the years, we have made contributions to individuals and families made possible by our gracious community donations of Forrest and Lamar counties.

Our organization would like to make a donation in the amount of $7000.00 to the Hattiesburg Police Star Team for two (2) tactical 308 caliber rifles. These rifles will provide officers with additional resources in the event of an active shooter situation.

Sincerely,

Jessica & Lauren
chipnforeheroes@yahoo.com

Chip N Fore Heroes is a 501(c)(3) non profit organization.

OFFICIAL CHECK

292883

REMITTER: CHIP N FORE HEROES
STAR TEAM

DATE 7/06/18

PAY TO THE ORDER OF CITY OF HATTIESBURG POLICE DEPARTMENT

EXACTLY **7,000 AND 00/100 DOLLARS

$ $7,000.00

First Bank
Member FDIC
P.O. Box 808 McComb, MS 39649
(601)-684-2231

FIRST BANK

AUTHORIZED SIGNATURE

HEAT SENSITIVE COLOR FADES WITH HEAT

[redacted]

OFFICIAL CHECK

292883

REMITTER: CHIP N FORE HEROES
STAR TEAM

DATE 7/06/18

CITY OF HATTIESBURG POLICE DEPARTMENT

EXACTLY **7,000 AND 00/100 DOLLARS

$ $7,000.00

First Bank
Member FDIC
P.O. Box 808 McComb, MS 39649
(601)-684-2231

CUSTOMER - FILE COPY

THE PURCHASE OF AN INDEMNITY BOND WILL BE REQUIRED BEFORE ANY CASHIER'S CHECK OF THIS BANK WILL BE REPLACED OR REFUNDED IN THE EVENT IT IS LOST, MISPLACED OR STOLEN.

FIRST BANK

AUTHORIZED SIGNATURE

NOT NEGOTIABLE

City of Hattiesburg, MS

200 Forrest St.
P.O. Box 1898
Hattiesburg, MS 39401

Master

File Number: 2018-655

File ID:	2018-655	**Type:**	Regular Agenda Item	**Status:**	Approved
Version:	1	**Reference:**		**In Control:**	City Council
Requester:				**File Created:**	07/30/2018
Brief Title:	Acknowledging receipt of the FYE 9-30-2017 H'burg Tourism Annual Report and Audit.			**Final Action:**	
				Minute Book Number:	MB 2018-197

Title:

Acknowledge receipt of the Annual Report and Audit of the Hattiesburg Tourism Commission for FYE September 30,2017.

Notes:

		Agenda Date:	08/07/2018
Indexes:		**Agenda Number:**	VII.-8
Sponsors:		**Enactment Date:**	
Attachments:	HTC_FY17_AnnualReport_CityCouncil	**Enactment Number:**	
Contact:		**Meeting Date:**	
Drafter:		**Effective Date:**	

History of Legislative File

Version:	Acting Body:	Date:	Action:	Sent To:	Due Date:	Return Date:	Result:
1	City Council	08/07/2018	Approved on the Routine Agenda				
	Action Text:	Approved on the Routine Agenda					

Text of Legislative File 2018-655

Title

Acknowledge receipt of the Annual Report and Audit of the Hattiesburg Tourism Commission for FYE September 30,2017.

Summary

Acknowledging FYE 2017 Annual Report and Audit for H'burg Tourism Commission.

Budget Information

Expenditure Type

Purchasing Item

Publication Information

VISIT

HBURG

VISITHATTIESBURG™

2017 ANNUAL REPORT

10.1.16 - 9.30.17

BIOGRAPHY OF VISITHATTIESBURG™

Tourism is a $268 million a year industry in Hattiesburg and growing every day.

Created in 1990 by the Mississippi State Legislature, the Hattiesburg Tourism Commission (HTC), doing business as VISITHATTIESBURG™, serves as the official Destination Marketing Organization (Convention & Visitors Bureau), and local industry leader for tourism in the City of Hattiesburg. VISITHATTIESBURG™ is governed by a seven-member board representing the business community and the local tourism industry. With primary funding generated by a 2% hotel bed tax, the guiding mission of VISITHATTIESBURG™ is very specific: to introduce new dollars into the Hattiesburg economy through increased short-term visitation and overnight stays.

In March 2004, VISITHATTIESBURG™ officially opened the doors to its new home in the Hattiesburg Visitors Center. The opening of this facility further complemented the marketing goals of VISITHATTIESBURG™ by providing the organization with an identifiable "face." Since opening, almost 450,000 visitors from around the globe have signed the guest book and been welcomed with Hattiesburg's hallmark hospitality.

From the start, local partnerships have played a critical role in the work of VISITHATTIESBURG™. The vast amount of VISITHATTIESBURG™'s partnerships is vital to its efforts to grow the area's tourism industry. Such partnerships include local hotels, restaurants, and attractions, entities such as the Hattiesburg Convention Commission, the Area Development Partnership, Hattiesburg's two local universities, the Forrest County Multipurpose Center, the Historic Downtown Association and many others. Through such partnerships, VISITHATTIESBURG™ has been able to serve as a catalyst for significant and unique events in Hattiesburg, such as Pre-Olympic Training in 1996, the Mississippi Miss Hospitality Pageant, refurbishment of the Historic Saenger Theater, installation of two Blues Trail Markers, recruitment of various art-related exhibits to Historic Downtown Hattiesburg, the completion of the Eureka School Project, and most recently, the expansion of the Hattiesburg Zoo and building of the High Ropes Adventure Course.

Since 2010, VISITHATTIESBURG™ has evolved and expanded to include oversight of all marketing activities for the facilities managed by the Hattiesburg Convention Commission, including the Lake Terrace Convention Center, Hattiesburg Saenger Theater, African American Military History Museum, the Hattiesburg Zoo, and the Historic Eureka School. Efforts for these facilities range from booking events and meetings to assisting with advertising campaigns and social media.

Over the last year, VISITHATTIESBURG™ has hosted four socials for tourism partners, sponsored the Live at 5 Encore performance, oversaw the creation of the banners on the light poles downtown, implemented the Ales to Trails campaign, which features local breweries along the Long Leaf Trace, and aided in raising awareness of the Arts in Parks movement, which included purchasing "Tigger," which is a tiger statue that now resides at Hattiesburg Zoo.

Since its inception, the marketing and promotional activities of VISITHATTIESBURG™ have served as a catalyst for the local tourism industry and have resulted in the industry's growth into a $274 million economic engine for Hattiesburg. Through its mission and goals, VISITHATTIESBURG™ is committed to continuing this economic growth while relying on the faces of tourism in Hattiesburg to tell its story.

Hattiesburg Tourism Commision Members

CHAIR
FRANK JAMES
At-Large

MARSHALL BELL
At-Large

BONNIE WARREN
At-Large

SHEILA VARNADO
Economic Development

ANTHONY L. HARRIS, P.E.
At-Large

Executive Director Richard Taylor stepped aside in April 2017 to focus on the Hattiesburg Convention Commission and its facilities. At this time a national search began to find a new Executive Director for the Hattiesburg Tourism Commission. In September 2017, Marlo Dorsey was named to the position and began in October 2017 for FY2018.

HBURG Highlights 2017

Newsletter Reach: 11,000+
Facebook Growth: 300%+
Events: #blessed

Named **Top 25** Holiday Shopping Destination by Expedia

Won **Best Overall Promotional Campaign** at MS Governor's Conference on Tourism

3rd **Most Visited City** in MS with **1.8 million** visitors

New website launched with local attractions, restaurants, and hotels

HBURG Video Released **(15.8K Views)**

2,824 Existing Hotel Rooms

Released **11 New Postcards** displaying HBURG favorites

VISIT**HBURG.ORG**

January
Longleaf Trace Lighting Project

February
HBURG Merch Tornado Relief Fundraiser
ADP Diversity in Business Reception at the AAMHM

March
MS Cycling 200 Ride
2016 Miss Hospitality Traveled MS for Spring Break
First Miss East 6th Street USO Crowned

April
Hubfest
Downtown Crawfish Jam
Live @ 5 Music Series

May
National Tourism Week Shining Star Luncheon
Lightpole Banner Project

June
Craft Beer Festival
Festival South
NCAA Tournament
ADP Partnership for National Retiree Recruitment Week
SummerTunes Music Series
Toby Barker elected as Mayor

July
Levitt Amp Outdoor Music Series
Camp Shelby's Centennial Celebration
67th Annual Miss Hospitality Competition

August
Levitt Amp Outdoor Music Series
USM Student Orientation Welcome from Tourism

September
Dearly Beloved Premier Bridal Tradeshow
Hattiesburg Zoo Named Tourism Attraction of the Year

October
Hosted Regional MSAE Conference
Dearly Departed Walking Tours (Downtown)
Mobile Street Festival
Downtown BBQ Showdown
Live @ 5 Music Series

November
Downtown Holiday Art Walk & Open House
MS Bicentennial Project - HBURG Storytellers
HBURG Zoo Mural Sponsorship

December
Visitors Center Holiday Open House
HBURG Tourism Partner Jingle & Mingle
Olde Tyme Christmas
Pine Belt Holiday Expo Presenter

HATTIESBURG TOURISM COMMISSION

FINANCIAL STATEMENTS

YEARS ENDED SEPTEMBER 30, 2017 and 2016

HATTIESBURG TOURISM COMMISSION
FINANCIAL STATEMENTS
YEARS ENDED SEPTEMBER 30, 2017 and 2016

TABLE OF CONTENTS

	PAGE
INDEPENDENT AUDITOR'S REPORT	3
FINANCIAL STATEMENTS	
Exhibit A – Statements of Net Position	6
Exhibit B – Statements of Activities	7
Exhibit C – Balance Sheets – Governmental Funds	8
Exhibit C1 – Reconciliations of the Balance Sheets - Governmental Funds to the Statements of Net Position	9
Exhibit D – Statements of Revenues, Expenditures, and Changes In the Fund Balances - Governmental Funds	10
Exhibit D1 – Reconciliations of the Statements of Revenues, Expenditures, and Changes in the Fund Balances to the Statements of Activities	11
NOTES TO FINANCIAL STATEMENTS	12
SUPPLEMENTAL INFORMATION	
Schedule 1A – Budgetary Comparison	25
Schedule 1B – Budgetary Comparison	26
Schedule 2 – Schedule of Directors	27
OTHER AUDITOR'S REPORTS	
Report On Internal Control Over Financial Reporting And On Compliance And Other Matters Based On An Audit Of Financial Statements Performed In Accordance With *Government Auditing Standards*	28

American Institute of
Certified Public Accountants

King CPA, PLLC

206 East Central Ave P.O. Box 1182
Petal, MS 39465
Telephone 601-544-9795….Fax 601-544-9793

Mississippi Society of Certified
Public Accountants

INDEPENDENT AUDITOR'S REPORT

To the Board of Directors
Hattiesburg Tourism Commission

Report on Financial Statements
We have audited the accompanying financial statements of the governmental activities and each major fund of the Hattiesburg Tourism Commission as of and for the years ended September 30, 2017 and 2016 which collectively comprise the Commission's basic financial statements as listed in the table of contents.

Management's Responsibility for the Financial Statements
Management is responsible for the preparation and fair presentation of these financial statements in accordance with accounting principles generally accepted in the United States of America; this includes the design, implementation, and maintenance of internal control relevant to the preparation and fair presentation of the financial statements that are free from material misstatement, whether due to fraud or error.

Auditor's Responsibility
Our responsibility is to express opinions on these financial statements based on our audit. We conducted our audit in accordance with auditing standards generally accepted in the United States of America and the standards applicable to financial audits contained in *Government Auditing Standards*, issued by the Comptroller General of the United States. Those standards require that we plan and perform the audit to obtain reasonable assurance about whether the financial statements are free from material misstatement.

An audit involves performing procedures to obtain audit evidence about the amounts and disclosures in the financial statements. The procedures selected depend on the auditor's judgment, including the assessment of the risks of material misstatement of the financial statements, whether due to fraud or error. In making those risk assessments, the auditor considers internal control relevant to the entity's preparation and fair presentation of the financial statements in order to design audit procedures that are appropriate in the circumstances, but not for the purpose of expressing an opinion on the effectiveness of the entity's internal control. Accordingly, we express no such opinion. An audit also includes evaluating the appropriateness of accounting policies used and the reasonableness of significant accounting estimates made by management, as well as evaluating the overall presentation of the financial statements.

We believe that the audit evidence we have obtained is sufficient and appropriate to provide a basis for our audit opinions.

Opinions

In our opinion, the financial statements referred to above present fairly, in all material respects, the respective financial position of the governmental activities and each major fund of the Hattiesburg Tourism Commission, as of September 30, 2017 and 2016, and the respective changes in financial position thereof for the years then ended in accordance with accounting principles generally accepted in the United States of America.

Other Matters

Required Supplementary Information

Management has omitted Management's Discussion and Analysis that accounting principles generally accepted in the United States of America require to be presented to supplement the basic financial statements. Such missing information, although not a part of the basic financial statements, is required by the Governmental Accounting Standards Board, who considers it to be an essential part of financial reporting for placing the basic financial statements in an appropriate operational, economic, or historical context. Our opinion on the basic financial statements is not affected by this missing information.

Other Information

Our audit was conducted for the purpose of forming opinions on the financial statements that collectively comprise the Commission's basic financial statements. The accompanying financial information listed as supplemental information in the table of contents is presented for purposes of additional analysis and is not a required part of the basic financial statements. Such information has not been subjected to the auditing procedures applied in the audit of the basic financial statements and, accordingly, we do not express an opinion or provide any assurance on it.

Other Reporting Required by Government Auditing Standards

In accordance with *Government Auditing Standards*, we have also issued our report dated February 9, 2018, on our consideration of the Hattiesburg Tourism Commission's internal control over financial reporting and on our tests of its compliance with certain provisions of laws, regulations, contracts and grant agreements and other matters. The purpose of that report is to describe the scope of our testing, and not to provide an opinion on internal control over financial reporting or on compliance. That report is an integral part of an audit performed in accordance with *Government Auditing Standards* in considering Hattiesburg Tourism Commission's internal control over financial reporting and compliance.

King CPA, PLLC

KING CPA, PLLC
Petal, Mississippi
February 9, 2018

HATTIESBURG TOURISM COMMISSION

FINANCIAL STATEMENTS

EXHIBIT A

HATTIESBURG TOURISM COMMISSION

STATEMENTS OF NET POSITION
SEPTEMBER 30, 2017 AND 2016

	Governmental Activities	
	2017	**2016**
Assets		
Cash and cash equivalents	$ 813,605	$ 844,808
Investments	223,975	223,533
Due from other governments	195,834	116,986
Other receivables	26,392	11,456
Fixed assets, net	6,314	5,838
TOTAL ASSETS	1,266,120	1,202,621
Deferred Outflow of Resources		
Deferred outflow related to pensions	69,462	88,178
Liabilities		
Accounts payable	19,922	5,577
Accrued payroll	4,356	8,995
Accrued compensated absenses	1,022	24,046
Net pension liability	721,787	714,500
TOTAL LIABILITIES	747,087	753,118
Deferred Inflow of Resources		
Deferred inflow related to pensions	61,843	1,353
Net Position		
Net investment in capital assets	6,314	5,838
Restricted for:		
AAMHM Committee	7,861	6,754
Hattiesburg Veterans Committee	4,551	6,323
HAPA	10,788	10,454
Unrestricted	497,138	506,959
TOTAL NET POSITION	$ 526,652	$ 536,328

The accompanying notes are an integral part of the financial statements.

EXHIBIT B

HATTIESBURG TOURISM COMMISSION

STATEMENTS OF ACTIVITIES

FOR THE YEARS ENDED SEPTEMBER 30, 2017 AND 2016

	Governmental Activities	
FUNCTION/PROGRAM EXPENSES:	**2017**	**2016**
Tourism Promotion		
Payroll expense	$ 304,632	$ 332,412
Pension expense	129,033	147,964
Advertising and promotion	247,458	163,321
Operational costs	135,715	61,919
Grants and sponsorships	62,819	22,800
Purchases for resale	-	7,300
Depreciation and related asset charges	1,007	526
Events and Programs		
Lightpole Banner	3,495	9,968
FAM Tours	5,760	7,307
Longleaf Trace Lighting	25,000	-
Art and Sculpture projects	55,166	14,917
Vietnam Veterans	1,772	18,737
Miss Hospitality pageant	75,466	78,609
Other event promotions	-	4,245
Total Function/Program Expenses	1,047,323	870,025
PROGRAM REVENUES:		
Charges for Services		
Gift Shop sales	-	7,307
MS Miss Hospitality	75,194	81,465
Other receipts	26,392	8,331
Operating Grants and Contributions		
Mississippi Development Authority	5,000	5,000
AAMHM Committee	3,300	26,600
HCC Contribution	135,000	180,000
HAPA	25,500	26,800
Total Program Revenue	270,386	335,503
NET PROGRAM EXPENSE	(776,937)	(534,522)
GENERAL REVENUES:		
Special sales tax	766,553	644,852
Interest income	709	1,702
Total General Revenues	767,262	646,554
CHANGE IN NET POSITION	(9,676)	112,032
NET POSITION - Beginning of Year	536,328	424,296
NET POSITION - End of Year	$ 526,652	$ 536,328

The accompanying notes are an integral part of the financial statements.

EXHIBIT C

HATTIESBURG TOURISM COMMISSION

BALANCE SHEETS – GOVERNMENTAL FUNDS

SEPTEMBER 30, 2017 AND 2016

		Special Revenue Funds				
	General	MMH	AAMHM		**Total**	
	Fund	Pageant	Committee	HAPA	**2017**	**2016**
ASSETS:						
Cash and cash equivalents	$ 705,678	$ 84,727	$ 12,412	$ 10,788	$ 813,605	$ 844,808
Investments	223,975	-	-	-	223,975	223,533
Due from other governments	195,834	-	-	-	195,834	116,986
Other Receivables	26,392	-	-	-	26,392	11,456
Inventory	-	-	-	-	-	-
Total Assets	$ 1,151,879	$ 84,727	$ 12,412	$ 10,788	$ 1,259,806	$ 1,196,783
LIABILITIES						
Liabilities:						
Accounts payable	$ 19,922	$ -	$ -	$ -	$ 19,922	$ 5,577
Deferred revenue	187,123	-	-	-	187,123	48,310
Accrued payroll	4,356	-	-	-	4,356	8,995
Total Liabilities	211,401	-	-	-	211,401	62,882
Fund Balances:						
Restricted						
AAMHM Committee	-	-	7,861	10,788	18,649	6,754
Hattiesburg Veterans Committee	-	-	4,551	-	4,551	6,323
Hattiesburg Alliance Public Arts	-	-	-	-	-	10,454
Committed:						
Economic Stabilization	450,000	-	-	-	450,000	450,000
Assigned:						
Arts coalition	50,000	-	-	-	50,000	50,000
Lightpole banner project	20,000	-	-	-	20,000	20,000
Zoo special project	200,000	-	-	-	200,000	150,000
Mississippi Miss Hospitality	-	84,727	-	-	84,727	240,967
Unassigned:						
General Fund	220,478	-	-	-	220,478	199,403
Total Fund Balance	940,478	84,727	12,412	10,788	1,048,405	1,133,901
Total Liabilities and Fund Balance	$ 1,151,879	$ 84,727	$ 12,412	$ 10,788	$ 1,259,806	$ 1,196,783

The accompanying notes are an integral part of the financial statements.

EXHIBIT C-1

HATTIESBURG TOURISM COMMISSION

RECONCILIATIONS OF THE BALANCE SHEETS - GOVERNMENTAL FUNDS
TO THE STATEMENTS OF NET POSITION
SEPTEMBER 30, 2017 AND 2016

		2017	2016
	Total Fund Balance-Governmental Funds (Exhibit C)	$ 1,048,405	$ 1,133,901
	Amounts reported for net position in the statement of net position are different because:		
1	Capital Assets used in governmental activities are not financial resources and are not reported as assets in governmental funds		
	Capital Assets	79,017	77,533
	Less Accumulated Depreciation	(72,703)	(71,695)
2	Some liabilities, including net pension obligations, are not due and payable in the current period and, therefore, are not reported in the funds:		
	Net Pension Liability	(721,787)	(714,500)
3	Deferred outflows and inflows of resources related to pensions are applicable to future periods and, therefore, are not reported in the funds		
	Deferred outflows of resources related to pensions	69,462	88,178
	Deferred inflows of resources related to pensions	(61,843)	(1,353)
4	Because some revenues will not be collected for several months after the year ends, they are not considered "available" revenues and are deferred in the governmental funds.		
	Unavailable revenues from State of MS/ City of Hattiesburg	123,057	-
	Unavailable revenues from the Hattiesburg Convention Center	26,392	-
5	A portion of the Commission's receivables are collected after year-end; but they are not collected soon enough to be available as financial resources for the current year. These revenues are deferred and not reported in the governmental funds.		
	Special Sales tax for September	37,674	48,310
6	Longterm liabilities, including compensated absences payable are not due and payable in the current period and are not reported as liabilities in governmental funds		
	Accrued Compensated Absences	(1,022)	(24,046)
	Total Net Position-Governmental Activities (Exhibit A)	$ 526,652	$ 536,328

The accompanying notes are an integral part of the financial statements.

EXHIBIT D

HATTIESBURG TOURISM COMMISSION

STATEMENTS OF REVENUES, EXPENDITURES, AND CHANGES
IN FUND BALANCES – GOVERNMENTAL FUNDS
FOR THE YEARS ENDED SEPTEMBER 30, 2017 AND 2016

		Special Revenue Funds			Total	
	General Fund	MMH Pageant	AAMHM Committee	HAPA	2017	2016
REVENUES						
Special sales tax	$ 654,131	$ -	$ -	$ -	$ 654,131	$ 645,512
Convention Center Contract	135,000	-	-	-	135,000	180,000
Gift Shop Sales	-	-	-	-	-	7,307
Event revenue	-	80,194	-	-	80,194	89,065
Membership Dues	-	-	1,400	-	1,400	89,065
Donations	-	-	1,900	25,500	27,400	89,065
Interest income	709	-	-	-	709	1,702
Total Revenues	789,840	80,194	3,300	25,500	898,833	982,717
EXPENDITURES						
Tourism Promotion						
Payroll expense	327,656	-	-	-	327,656	337,515
Pension expense	42,540	-	-	-	42,540	35,455
Advertising and promotion	247,458	-	-	-	247,458	163,321
Operational costs	137,196	-	-	-	137,196	68,283
Grants and sponsorships	60,626	-	2,193	-	62,819	22,800
Purchases for resale	-	-	-	-	-	7,300
Events and Programs						
Lightpole Banner	3,495	-	-	-	3,495	9,968
FAM Tours	5,760	-	-	-	5,760	7,307
Longleaf Trace Lighting	25,000	-	-	-	25,000	-
Art and Sculpture projects	30,000	-	-	25,166	55,166	14,917
Vietnam Veterans	-	-	1,772	-	1,772	18,737
Miss Hospitality pageant	-	75,466	-	-	75,466	78,609
Other event promotions	-	-	-	-	-	4,245
Total Expenditures	879,731	75,466	3,965	25,166	984,329	768,457
OTHER FINANCING SOURCES						
Operating Transfers In	160,967	-	-	-	160,967	-
Operating Transfers Out	-	(160,967)	-	-	(160,967)	-
Total Other Financing Sources	160,967	(160,967)	-	-	-	-
Net Change in Fund Balance	71,075	(156,240)	(665)	334	(85,496)	214,260
FUND BALANCE, Beginning	869,403	240,967	13,077	10,454	1,133,901	919,641
FUND BALANCE, Ending	$ 940,478	$ 84,727	$ 12,412	$ 10,788	$ 1,048,405	$ 1,133,901

The accompanying notes are an integral part of the financial statements.

EXHIBIT D-1

HATTIESBURG TOURISM COMMISSION

RECONCILIATIONS OF THE STATEMENTS OF REVENUES, EXPENDITURES,
AND CHANGES IN FUND BALANCES OF GOVERNMENTAL FUNDS
TO THE STATEMENTS OF ACTIVITIES
FOR THE YEARS ENDED SEPTEMBER 30, 2017 AND 2016

		2017		2016
	Net Change in fund balances-governmental funds (Exhibit D)	$ (85,496)	$	214,260
	Amounts reported for governmental activities in the statement of activities are different because:			
1	Governmental funds report capital outlay as expenditures. However, in the statement of activities, the cost of capital assets is allocated over their estimated useful lives as depreciation expense.			
	Capital Outlay	1,485		6,364
	Deprciation Expense	(1,007)		(526)
2	Some items reported in the statement of activities relating to the implementation of GASB 68 are not reported in the governmental funds.			
	Recording of pension expense for the current period	(129,033)		(147,964)
	Recording of contributions made	42,540		35,455
4	Because some revenues will not be collected for several months after the year ends, they are not considered "available" revenues and are deferred in the governmental funds.			
	Unavailable revenues from State of MS/ City of Hattiesburg	123,057		-
	Unavailable revenues from the Hattiesburg Convention Center	26,392		-
3	Some items reported in the Statement of Activities do not provide or require the use of current financial resources and are not reported as revenue/expenditures in governmental funds.			
	Changes in compensated absences	23,024		5,103
	Changes in deferred revenue	(10,635)		(660)
	Change in net position of governmental activities (Exhibit B)	$ (9,676)	$	112,032

The accompanying notes are an integral part of the financial statements.

City of Hattiesburg, MS

200 Forrest St.
P.O. Box 1898
Hattiesburg, MS 39401

Master

File Number: 2018-638

File ID:	2018-638	**Type:**	Regular Agenda Item	**Status:**	Approved
Version:	1	**Reference:**		**In Control:**	City Council
Requester:				**File Created:**	07/18/2018
Brief Title:	Acknowledgement of Combined Water and Sewer Audit for FYE 2016.			**Final Action:**	
				Minute Book Number:	MB 2018-197

Title:

Acknowledge receipt of the audit of Combined Water & Sewer System of the City of Hattiesburg for the fiscal year ending September 30, 2016 from Topp McWhorter Harvey,PLLC.

Notes:			
		Agenda Date:	08/07/2018
Indexes:		**Agenda Number:**	VII.-9
Sponsors:		**Enactment Date:**	
Attachments:	FYE- 2016 Combined Water and Sewer Audit.	**Enactment Number:**	
Contact:		**Meeting Date:**	08/07/2018
Drafter:		**Effective Date:**	

History of Legislative File

Version:	Acting Body:	Date:	Action:	Sent To:	Due Date:	Return Date:	Result:
1	City Council	08/07/2018	Approved on the Routine Agenda				
	Action Text:	Approved on the Routine Agenda					

Text of Legislative File 2018-638

Title

Acknowledge receipt of the audit of Combined Water & Sewer System of the City of Hattiesburg for the fiscal year ending September 30, 2016 from Topp McWhorter Harvey,PLLC.

Summary

Acknowledgement of Combined Water & Sewer System Audit.

Budget Information

Expenditure Type

Purchasing Item

Publication Information

CITY OF HATTIESBURG, MISSISSIPPI
COMBINED WATER AND SEWER SYSTEM

FINANCIAL STATEMENTS

Year Ended September 30, 2016

TMH

TOPP McWHORTER HARVEY PLLC

CERTIFIED PUBLIC ACCOUNTANTS

www.tmhcpas.com

CITY OF HATTIESBURG, MISSISSIPPI
COMBINED WATER AND SEWER SYSTEM

TABLE OF CONTENTS

	Page
INDEPENDENT AUDITOR'S REPORT	1 - 3
FINANCIAL STATEMENTS	
Exhibit A - Statement of Net Position	4 - 5
Exhibit B - Statement of Revenues, Expenses, and Changes in Fund Net Position	6
Exhibit C - Statement of Cash Flows	7 - 8
NOTES TO FINANCIAL STATEMENTS	9

HATTIESBURG
2 SOUTHERN POINTE PARKWAY
SUITE 100
HATTIESBURG, MS 39401
P. O. DRAWER 15099
HATTIESBURG, MS 39404-5099
T 601.264.3519
F 601.264.3642
TOLL-FREE 877.842.7137

MEMBERS
AMERICAN INSTITUTE OF CERTIFIED PUBLIC ACCOUNTANTS

MISSISSIPPI SOCIETY OF CERTIFIED PUBLIC ACCOUNTANTS

TMH
TOPP McWHORTER HARVEY PLLC
CERTIFIED PUBLIC ACCOUNTANTS
www.tmhcpas.com

COLUMBIA
150 OLD HWY 98 EAST
P. O. BOX 609
COLUMBIA, MS 39429
T 601.736.3449
F 601.736.0501

GULFPORT
2019 23RD AVENUE
GULFPORT, MS 39501
P. O. BOX 1842
GULFPORT, MS 39502
T 228.864.1779
F 228.864.3850

INDEPENDENT AUDITOR'S REPORT

To the Honorable Mayor and City Council
City of Hattiesburg, Mississippi
Hattiesburg, Mississippi

We have audited the accompanying financial statements of the City of Hattiesburg, Mississippi Combined Water and Sewer System (the System), the proprietary fund included in the basic financial statements of the City, as of and for the year ended September 30, 2016, and the related notes to the financial statements, as listed in the table of contents.

Management's Responsibility for the Financial Statements

Management is responsible for the preparation and fair presentation of these financial statements in accordance with accounting principles generally accepted in the United States of America; this includes the design, implementation, and maintenance of internal control relevant to the preparation and fair presentation of financial statements that are free from material misstatement, whether due to fraud or error.

Auditor's Responsibility

Our responsibility is to express an opinion on these financial statements based on our audit. We conducted our audit in accordance with auditing standards generally accepted in the United States of America. Those standards require that we plan and perform the audit to obtain reasonable assurance about whether the financial statements are free from material misstatement.

An audit involves performing procedures to obtain audit evidence about the amounts and disclosures in the financial statements. The procedures selected depend on the auditor's judgment, including the assessment of the risks of material misstatement of the financial statements, whether due to fraud or error. In making those risk assessments, the auditor considers internal control relevant to the entity's preparation and fair presentation of the financial statements in order to design audit procedures that are appropriate in the circumstances, but not for the purpose of expressing an opinion on the effectiveness of the entity's internal control. Accordingly, we express no

To the Honorable Mayor and City Council
City of Hattiesburg, Mississippi

such opinion. An audit also includes evaluating the appropriateness of accounting policies used and the reasonableness of significant accounting estimates made by management, as well as evaluating the overall presentation of the financial statements.

We believe that the audit evidence we have obtained is sufficient and appropriate to provide a basis for our audit opinion.

Opinion

In our opinion the financial statements referred to above present fairly, in all material respects, the financial position of the City of Hattiesburg Combined Water and Sewer System as of September 30, 2016, and the changes in its financial position and cash flows thereof for the year then ended in accordance with accounting principles generally accepted in the United States of America.

Emphasis of Matters

The Reporting Entity

As described in Note 1, the financial statements present only the City of Hattiesburg, Mississippi Combined Water and Sewer System and do not purport to, and do not present fairly the financial position of the City of Hattiesburg, Mississippi, as of September 30, 2016, the changes in its financial position, or, where applicable, its cash flows for the year then ended in accordance with accounting principles generally accepted in the United States of America. Our opinion is not modified with respect to this matter.

Compliance with Mississippi Department of Environmental Quality Order

As described in Notes 7 and 10 to the financial statements, the City is subject to certain mandates for sewer system operation and rehabilitation pursuant to action and intervention by the Mississippi Department of Environmental Quality. In ongoing efforts to comply with the related Amended Agreed Order, the City has engaged in development, design, and construction of various elements of a multi-million dollar long-term comprehensive sewer system improvement project, most of which have been funded by proceeds of revenue bonds. Subsequent to the year ended September 30, 2016, the City was party to a Stipulated Order which replaces the Amended Agreed Order and grants relief from certain obligations that had been imposed under the earlier Order. As a result, the City indefinitely suspended certain sewer system rehabilitation projects subsequent to year end. Our opinion is not modified with respect to this matter.

To the Honorable Mayor and City Council
City of Hattiesburg, Mississippi

Matters Related to Funding

Subsequent to September 30, 2016, certain Federal and State grant reimbursements were delayed because of delinquency in submission of City annual financial reports. In addition, the City's credit rating was suspended in November 2016. Our opinion in not modified with respect to these matters.

Other Matters

Required Supplementary Information

Management has omitted the management's discussion and analysis that accounting principles generally accepted in the United States of America require to be presented to supplement the basic financial statements. Such missing information, although not a part of the basic financial statements, is required by the Governmental Accounting Standards Board, who considers it to be an essential part of financial reporting for placing the basic financial statements in an appropriate operational, economic, or historical context. Our opinion on the basic financial statements is not affected by this missing information.

Topp McWhorter Harvey, PLLC

Hattiesburg, Mississippi
June 26, 2018

EXHIBIT A

CITY OF HATTIESBURG, MISSISSIPPI
COMBINED WATER AND SEWER SYSTEM

STATEMENT OF NET POSITION
SEPTEMBER 30, 2016

CURRENT ASSETS		
Cash and cash equivalents - unrestricted	$	10,753,877
Cash with fiscal agent		28,892,099
Accounts receivable - trade (net of allowance for doubtful accounts of $1,659,981)		2,036,156
Total current assets		41,682,132
NONCURRENT ASSETS		
Capital Assets		
Land		315,243
Construction in progress		5,262,259
Infrastructure, net		86,868,591
Buildings and improvements, net		321,108
Machinery and equipment, net		9,023,210
Total noncurrent assets		101,790,411
Total assets		143,472,543
DEFERRED OUTFLOW OF RESOURCES		
Related to pensions		868,800
Prepaid bond insurance		230,160
Total deferred outflows		1,098,960
CURRENT LIABILITIES		
Due to governmental funds		238,551
Sales tax payable		31,855
Accounts payable		629,223
Accrued wages and benefits		42,227
Accrued interest payable		722,002
Other liabilities		265,691
Unamortized bond premium - current		45,384
Revenue bonds - current		2,735,000
General obligation bonds - current		2,069,000
General obligation note payable - current		173,771
Compensated absences - current		4,295
Total current liabilities		6,956,999

The notes to the financial statements are an integral part of this statement.

EXHIBIT A
PAGE TWO

CITY OF HATTIESBURG, MISSISSIPPI
COMBINED WATER AND SEWER SYSTEM

STATEMENT OF NET POSITION
SEPTEMBER 30, 2016

NON-CURRENT LIABILITIES		
Revenue bonds	$	60,775,000
General obligation bonds		12,411,000
General obligation note payable		120,684
Unamortized bond premium		392,417
Compensated absences		24,340
Net pension obligation		4,818,616
Other post employment benefits obligation		105,583
Customer meter deposits payable from restricted assets		1,327,351
Total non-current liabilities		79,974,991
Total liabilities		86,931,990
DEFERRED INFLOWS OF RESOURCES		
Related to pensions		9,374
Deferred revenues		432,231
Total deferred inflows		441,605
NET POSITION		
Net investment in capital assets		23,068,155
Unrestricted		34,129,753
Total net position	$	57,197,908

The notes to the financial statements are an integral part of this statement.

EXHIBIT B

CITY OF HATTIESBURG, MISSISSIPPI
COMBINED WATER AND SEWER SYSTEM

STATEMENT OF REVENUES, EXPENSES, AND CHANGES IN FUND NET POSITION
YEAR ENDED SEPTEMBER 30, 2016

OPERATING REVENUES		
Water charges	$	10,143,603
Sewer charges		10,117,051
Sewer connections		70,239
Turn-on fees		54,450
Taps		242,265
Total operating revenues		20,627,608
OPERATING EXPENSES		
Personal services		3,044,784
Other services and charges		10,444,989
Supplies and expenses		1,018,114
Depreciation		3,766,905
Other operating expenses		232,395
Total operating expenses		18,507,187
OPERATING INCOME		2,120,421
NON-OPERATING REVENUES (EXPENSES)		
Interest revenue		44,846
Interest expense		(2,197,054)
Other revenues		130,810
Total non-operating revenues (expenses)		(2,021,398)
INCOME BEFORE TRANSFERS		99,023
Transfers in		56,908
CHANGE IN NET POSITION		155,931
NET POSITION - beginning		48,405,900
Prior period adjustment		8,636,077
NET POSITION - beginning, as adjusted		57,041,977
NET POSITION - ending	$	57,197,908

The notes to the financial statements are an integral part of this statement.

EXHIBIT C
PAGE 1 OF 2

CITY OF HATTIESBURG, MISSISSIPPI
COMBINED WATER AND SEWER SYSTEM

STATEMENT OF CASH FLOWS
YEAR ENDED SEPTEMBER 30, 2016

CASH FLOWS FROM OPERATING ACTIVITIES		
Receipts from customers	$	20,206,647
Payments to suppliers and service providers		(15,335,516)
Payments to employees for salaries and benefits		(2,745,453)
Net cash provided by operating activities		2,125,678
CASH FLOWS FROM NONCAPITAL FINANCING ACTIVITIES		
Transfers from other funds		56,908
Net cash provided by noncapital financing activities		56,908
CASH FLOWS FROM CAPITAL AND RELATED FINANCING ACTIVITIES		
Proceeds from long-term debt issued		25,190,000
Principal payments - bonds and notes		(2,856,589)
Acquisition and construction of capital assets		(6,011,106)
Other receipts (payments)		130,810
Interest paid on capital debt		(1,994,539)
Net cash provided by capital and related financing activities		14,458,576
CASH FLOWS FROM INVESTING ACTIVITIES		
Interest Income		44,846
Net cash provided by investing activities		44,846
NET INCREASE IN CASH AND CASH EQUIVALENTS		16,686,008
CASH AND CASH EQUIVALENTS - Beginning		22,959,968
CASH AND CASH EQUIVALENTS - Ending	$	39,645,976
Displayed on Exhibit A as:		
Cash and cash equivalents	$	10,753,877
Cash with fiscal agent		28,892,099
	$	39,645,976

The notes to the financial statements are an integral part of this statement.

EXHIBIT C
PAGE 2 OF 2

CITY OF HATTIESBURG, MISSISSIPPI
COMBINED WATER AND SEWER SYSTEM

STATEMENT OF CASH FLOWS
YEAR ENDED SEPTEMBER 30, 2016

RECONCILIATION OF OPERATING INCOME TO NET CASH PROVIDED BY OPERATING ACTIVITIES:		
OPERATING INCOME	$	2,120,421
ADJUSTMENTS TO RECONCILE OPERATING INCOME TO NET CASH PROVIDED BY OPERATING ACTIVITIES:		
Depreciation expense		3,766,905
Changes in assets and liabilities:		
(Increase) in accounts receivable - trade		(727,026)
Decrease in prepaid insurance - bonds		41,781
(Increase) in deferred outflows related to pensions		(278,745)
(Decrease) in accounts payable		(2,512,448)
(Decrease) in other liabilities		(979,866)
(Decrease) in wages and benefits payable		(62,880)
Increase in customer meter deposits		111,920
Increase in sales tax payable		9,187
(Decrease) in due to other governmental funds		(189,485)
(Decrease) in compensated absences		(21,224)
Increase in net pension obligation		714,426
Increase in other post employment benefits		48,612
(Decrease) in deferred inflows related to pensions		(100,858)
Increase in deferred revenues		184,958
Total adjustments		5,257
NET CASH PROVIDED BY OPERATING ACTIVITIES	$	2,125,678

The notes to the financial statements are an integral part of this statement.

NOTES TO FINANCIAL STATEMENTS

CITY OF HATTIESBURG, MISSISSIPPI
COMBINED WATER AND SEWER SYSTEM

NOTES TO FINANCIAL STATEMENTS
YEAR ENDED SEPTEMBER 30, 2016

NOTE 1 - SUMMARY OF SIGNIFICANT ACCOUNTING POLICIES

The summary of significant accounting policies of the City of Hattiesburg Combined Water and Sewer System (the System) is presented to assist in the understanding of the financial statements. The financial statements and notes are representations of the System's management, which is responsible for their integrity and objectivity.

Reporting Entity - These financial statements present only the activity of the System, which is a department of the City of Hattiesburg, and consists of all departmental accounting funds and activities that comprise the System. These financial statements do not include financial data for the City of Hattiesburg as a whole or its other departments and activities.

The System includes the sewage treatment plant, sewage pumping stations and collection systems, and the water distribution system. It is operated as an enterprise fund of the City of Hattiesburg (the City) and is therefore included in the City's annual financial statements. Enterprise fund types are proprietary funds used to account for operations that are financed and operated in a manner similar to private business enterprises. Enterprise funds are utilized when the intent of the governing body is that the costs (expenses, including depreciation) of providing goods or services to the general public on a continuing basis be financed or recovered primarily through user charges. Enterprise funds are also utilized where the governing body has decided the periodic determination of revenues earned, expenses incurred, and net income is appropriate for capital maintenance, public policy, management control, accountability or other purposes.

Measurement Focus, Basis of Accounting, and Financial Statement Presentation - The System's financial statements are reported using the accrual basis of accounting. Revenues are recorded when earned and expenses are recorded when a liability is incurred, regardless of the timing of the related cash flows. Grants and similar items are recognized as revenue as soon as all eligibility requirements imposed by the provider have been met.

The System uses internal accounting funds for budgetary and management purposes and to distinguish accounts by function or activity. These internal funds do not represent accounting funds as defined under U.S. generally accepted accounting principles, but instead are departments within the enterprise fund, which includes all System accounts. As a general rule, the effect of the System's interfund activity has been eliminated.

CITY OF HATTIESBURG, MISSISSIPPI
COMBINED WATER AND SEWER SYSTEM

NOTES TO FINANCIAL STATEMENTS
PAGE TWO
YEAR ENDED SEPTEMBER 30, 2016

NOTE 1 - SUMMARY OF SIGNIFICANT ACCOUNTING POLICIES (Cont.)

Operating revenues and expenses are distinguished from nonoperating items. Operating revenues and expenses generally result from providing services and producing and delivering goods or services in connection with an enterprise fund's principal ongoing operations. The principal operating revenues of the System are charges to customers for sales and services. The System also recognizes as operating revenue the portion of tap fees intended to recover the cost of connecting new customers to the System. Operating expenses include the cost of sales and services, administrative expenses, and depreciation on capital assets. All revenues and expenses not meeting this definition are reported as nonoperating revenues and expenses.

When both restricted and unrestricted resources are available for use, it is the System's policy to use restricted resources first, then unrestricted resources as they are needed.

Cash and Cash Equivalents - For purposes of the statement of cash flows, cash and cash equivalents consist of cash on hand, demand deposits, and short-term investments with original maturities of three months or less from the date of acquisition.

Receivables and Payables - Trade accounts receivable are attributable to customers' unpaid balances at year-end for charges for services. The System estimates the allowance for doubtful water and sewer account balances based upon a review of balances and status of customer accounts and upon consideration of historical collection trends and other factors.

Prepaid Items - Any payments to vendors that reflect costs applicable to future accounting periods are presented as prepaid items in the statement of net position.

Capital Assets - Capital assets, including land, buildings, equipment, and infrastructure assets, that are purchased or constructed are recorded at historical cost. Donated capital assets are recorded at estimated fair market value at the date of donation.

A capitalization threshold of $5,000 is used for all capital assets with an estimated useful life in excess of two years. The costs of normal maintenance and repairs that do not add to the value of an asset or materially extend assets' lives are not capitalized. Major outlays for capital assets and improvements are capitalized as projects are constructed. Interest incurred during the construction phase of capital asset additions or renovations is capitalized into construction in progress while the projects are in progress and included as part of the capitalized value of the relevant assets upon project completion.

CITY OF HATTIESBURG, MISSISSIPPI
COMBINED WATER AND SEWER SYSTEM

NOTES TO FINANCIAL STATEMENTS
PAGE THREE
YEAR ENDED SEPTEMBER 30, 2016

NOTE 1 - SUMMARY OF SIGNIFICANT ACCOUNTING POLICIES (Cont.)

Property, plant, and equipment are depreciated using the straight line method over the following estimated useful lives:

Water and sewer systems	18 - 50 years
Buildings and improvements	20 - 50 years
Machinery and equipment	5 - 10 years

Deferred Outflows of Resources - In addition to assets, the statement of net position reports a separate section for deferred outflows of resources. This separate financial statement element represents a consumption of net position that applies to future periods and is not recognized as an outflow of resources, or expense, until then. The System reports prepaid insurance on the Water and Sewer Revenue Bonds as a deferred outflow of resources. In addition, the System reports certain amounts related to pensions including contributions to the employee pension plan subsequent to the measurement date of the actuarial valuation for the plan, as deferred outflows of resources.

Deferred Inflows of Resources - Deferred inflows of resources are a separate financial statement element that represents an acquisition of net position or fund balance that applies to a future period and so will not be recognized as an inflow of resources (revenue) until that time. The System reports pension related items resulting from the difference between estimated and actual return on pension plan investments, which are being amortized over a five year period using the straight-line method.

Long-term Bonds - Bonds payable are reported net of applicable bond premiums or discounts. Such discounts and premiums are amortized over the life of the related bonds. Bond issuance costs, other than prepaid insurance costs, are recognized as expenses in the period incurred. Prepaid insurance costs are reported as an asset and are recognized as expenses over the duration of the related debt.

Net Pension Liability - For purposes of measuring the net pension liability and deferred outflows and inflows of resources related to pensions, and pension expense, information about the fiduciary net position of the System's pension plans and additions to/deductions from the plan's net position have been determined on the same basis as they are reported by Public Employees' Retirement System of Mississippi. For this purpose, benefit payments (including refunds of employee contributions) are recognized when due and payable in accordance with the benefit terms. Member contributions are recognized in the period in which they are earned. Investments are reported at fair value.

CITY OF HATTIESBURG, MISSISSIPPI
COMBINED WATER AND SEWER SYSTEM

NOTES TO FINANCIAL STATEMENTS
PAGE FOUR
YEAR ENDED SEPTEMBER 30, 2016

NOTE 1 - SUMMARY OF SIGNIFICANT ACCOUNTING POLICIES (Cont.)

Compensated Absences - It is the City's policy to permit employees to accumulate earned but unused vacation, sick pay, overtime, and holiday pay benefits. There is no liability for unpaid accumulated sick leave since the City does not have a policy to pay any amounts when employees separate from service with the government. All vacation, overtime, and holiday pay is accrued when incurred.

Net Position - The System's statement of net position presents financial information on all of the System's assets, liabilities and deferred inflows and outflows of resources, with the difference reported as net position. Net position invested in capital assets is presented net of related debt and consists of capital assets net of accumulated depreciation, reduced by the outstanding balances (excluding unspent proceeds) of any borrowing used for the acquisition, construction or improvement of those assets. Net position is reported as restricted when there are limitations imposed on its use either through enabling legislation, laws or regulations of other governments, or by external groups such as creditors, grantors, or contributors. The residual component of net position is reported as unrestricted.

Budgets and Budgetary Accounting - The System's annual budget is included in the legally adopted budget of the City. The City's Chief Financial Officer is authorized to transfer budgeted amounts within departments within the published expense categories; however, any revisions that alter the total expenses of any budgeted fund must be approved by the City Council. Cumulative increases to departmental expenses in excess of 10% must also be published in the local newspaper.

Each internal accounting fund's appropriated budget is prepared on a detailed line item basis. Revenues are budgeted by source. Pursuant to the Mississippi State Department of Audit's prescribed format, expenses are budgeted by department and class as follows: personal services, supplies, other services and charges, capital outlays, transfers, and debt service. This constitutes the legal level of control. Expenses may not exceed appropriations at this level.

Encumbrances arise from the issuance of purchase orders, which must be within the adopted budgetary limits. Encumbrances are recorded when purchase orders are issued but are not considered expenses until liabilities for payments are incurred upon receipt of goods or services. Encumbrances do not lapse at the close of the fiscal year but are carried forward. (If necessary, subsequent year budgets are amended to cover prior year encumbrances.)

CITY OF HATTIESBURG, MISSISSIPPI
COMBINED WATER AND SEWER SYSTEM

NOTES TO FINANCIAL STATEMENTS
PAGE FIVE
YEAR ENDED SEPTEMBER 30, 2016

NOTE 1 - SUMMARY OF SIGNIFICANT ACCOUNTING POLICIES (Cont.)

Use of Estimates - The preparation of financial statements in conformity with U.S. generally accepted accounting principles requires management to make estimates and assumptions. This affects the reported amounts of assets and liabilities, disclosure of contingent assets and liabilities at the date of the financial statements, and the reported amounts of revenues and expenses recognized during the reporting period. Actual results could differ from these estimates. Significant estimates include useful lives and any indicated impairment of capital assets, the allowance for doubtful customer accounts receivable, and liabilities for the employee health insurance plan, pensions, and other postemployment benefits and the current and long-term portions of compensated absences.

NOTE 2 - PRIOR PERIOD ADJUSTMENTS

A summary of prior period adjustments reflected on the Statement of Revenues, Expenses, and Changes in Fund Net Position is presented below:

Explanation	Amount
Correction of Error:	
To adjust capital assets, net of related accumulated depreciation	$ 8,824,877
To adjust accrued interest on long-term liabilities	(297,231)
To adjust compensated absences balance	108,431
	$ 8,636,077

CITY OF HATTIESBURG, MISSISSIPPI
COMBINED WATER AND SEWER SYSTEM

NOTES TO FINANCIAL STATEMENTS
PAGE SIX
YEAR ENDED SEPTEMBER 30, 2016

NOTE 3 - DEPOSITS

Deposits **-** Pursuant to City policy, the City maintains System depository accounts in financial institutions which are approved as public depositories under the Mississippi Statewide Public Funds Collateral Program. Under this program, which is administered by the Office of the State Treasurer, financial institutions holding deposits of public funds must pledge securities as collateral against those deposits, and such collateral is held in the name of the State Treasurer under provision of Section 27-105-5, Miss. Code Ann. (1972). In the event of failure of a financial institution, securities pledged by that institution would be liquidated by the State Treasurer to replace the public deposits not covered by the Federal Depository Insurance Corporation (FDIC). Through the Statewide Public Funds Collateral Program, the System's funds are protected from custodial credit risk that, in the event of a financial institution's failure, the System's deposits may not be returned to it. As of September 30, 2016, the System's deposits in financial institutions were not exposed to custodial credit risk because all deposits were in financial institutions approved under the State Treasurer's collateral pool program.

The carrying amount of the System's deposits with financial institutions was $10,753,877 as of September 30, 2016, including $1,327,351 restricted for customer meter deposits.

Custodial Credit Risk - Deposits **-** Custodial credit risk is defined as the risk that, in the event of a financial institution's failure, the government's deposits may not be returned to it. The City does not have a deposit policy for custodial credit risk. As of September 30, 2016, the System's bank balance was not exposed to custodial credit risk.

Cash With Fiscal Agents **-** The System maintains balances in fiscal agent accounts held at approved State depositories. These balances represent amounts set aside for payment of debt service and related fees and expenses on revenue bonds, along with balance of unexpended proceeds of such bonds set aside for project construction under terms of underlying debt agreements. The carrying amount of the System's cash with fiscal agents at September 30, 2016 totaled $28,892,099.

CITY OF HATTIESBURG, MISSISSIPPI
COMBINED WATER AND SEWER SYSTEM

NOTES TO FINANCIAL STATEMENTS
PAGE SEVEN
YEAR ENDED SEPTEMBER 30, 2016

NOTE 4 - CAPITAL ASSETS

Capital asset activity for the System for the year ended September 30, 2016, was as follows:

	Beginning Balance	Additions	Retirements	Adjustments	Ending Balance
Capital assets not being depreciated:					
Land	$ 315,243	$ -	$ -	$ -	$ 315,243
Construction in progress	3,422,443	5,805,124	(4,362,709)	397,401	5,262,259
Total capital assets not being depreciated	3,737,686	5,805,124	(4,362,709)	397,401	5,577,502
Capital assets being depreciated:					
Buildings and improvements	334,833	-	-	(13,725)	321,108
Machinery and equipment	9,061,293	205,983	(190,651)	(53,415)	9,023,210
Infrastructure	109,994,529	4,362,709	-	8,386,128	122,743,366
Total capital assets being depreciated	119,390,655	4,568,692	(190,651)	8,318,988	132,087,684
Less accumulated depreciation for:					
Buildings and improvements	310,669	1,606	-	(13,950)	298,325
Machinery and equipment	8,158,979	411,715	(190,651)	(75,198)	8,304,845
Infrastructure	23,937,360	3,353,584	-	(19,340)	27,271,604
Total accumulated depreciation	32,407,008	3,766,905	(190,651)	(108,488)	35,874,774
Total capital assets being depreciated, net	86,983,647	801,787	-	8,427,476	96,212,910
Capital assets, net	$ 90,721,333	$ 6,606,911	$ (4,362,709)	$ 8,824,877	$ 101,790,412

Note: Adjustments represent the correction of errors in the depreciation schedule and inclusion of prior year infrastructure previously retired. Current year additions to System capital assets consist primarily of costs incurred for construction projects in progress as of year-end or placed in service during the year in conjunction with long-term projects.

CITY OF HATTIESBURG, MISSISSIPPI
COMBINED WATER AND SEWER SYSTEM

NOTES TO FINANCIAL STATEMENTS
PAGE EIGHT
YEAR ENDED SEPTEMBER 30, 2016

NOTE 5 - INTERFUND PAYABLES AND TRANSFERS

Balances due from the System to governmental funds of the City at September 30, 2016, consisted of the following:

$	7,206	Due to the City's General Fund for reimbursements of oil and gas expenses
	9,383	Due to the City's General Fund for insurance expenses
	36,105	Due to the City's General Fund for System debt payments
	185,857	Due to the City's General Fund for trash and recycling fees
$	238,551	***Total Due to Governmental Funds***

The outstanding balances between System funds and other funds of the City result from the time lag between the dates that interfund goods and services are provided or reimbursable expenses occur and the dates that payments between funds are made. These interfund balances are generally settled within one year of the date incurred.

Interfund transfers made to the System from other funds of the City for the year ended September 30, 2016, are as follows:

$	56,908	Transferred from the City's General Fund for workers compensation

Interfund transfers are authorized components of the System budget and are typically used to use unrestricted revenues collected in the other funds of the City to finance various programs accounted for in System funds.

NOTE 6 - LONG-TERM LIABILITIES

General Obligation Bonds

The City issues general obligation bonds to provide funds for the acquisition and construction of major System capital facilities. Although such general obligation bonds are backed by the full faith and credit of the City, this debt is expected to be repaid from System funds and is thus reported in the System's statement of net position in accordance with U.S. generally accepted accounting principles. General obligation bonds are generally issued as serial bonds with essentially level principal and interest payments maturing each year with maturities that range from 10 to 20 years. General obligation bonds outstanding for the System at September 30, 2016 were as follows:

CITY OF HATTIESBURG, MISSISSIPPI
COMBINED WATER AND SEWER SYSTEM

NOTES TO FINANCIAL STATEMENTS
PAGE NINE
YEAR ENDED SEPTEMBER 30, 2016

NOTE 6 - LONG-TERM LIABILITIES (Cont.)

General Obligation Bonds	Sale Date	Original Borrowing	Interest Rates to Maturity	Final Maturity	Outstanding 9/30/2016
Public Improvements	2010	$ 7,500,000	2.75 - 3.80% *	2030	$ 2,830,000
Public Improvements	2015	4,605,000	2.00 - 3.00% *	2024	4,525,000
Public Improvements	2016	7,125,000	1.60%	2021	7,125,000
					$ 14,480,000

* Interest rates vary by maturity block of bonds.

Revenue Bonds

The City issues revenue bonds to provide funds for the acquisition and construction of System infrastructure and related improvements. These bonds are secured by System operating revenues and are subject to the requirements of the respective revenue bond documents. These bond documents include important net revenue coverage and parity debt requirements. Bonds are generally issued as serial bonds with essentially level principal and interest payments maturing each year with maturities that range from 15 to 25 years. Revenue bonds outstanding at September 30, 2016 were as follows:

Revenue Bonds	Sale Date	Original Borrowing	Interest Rates to Maturity	Final Maturity	Outstanding 9/30/2016
W&S Revenue Project, Series 2012	2012	$ 12,500,000	2.50 - 5.00% *	2032	$ 10,610,000
W&S Refunding Bonds, Series 2014	2014	28,000,000	3.00 - 5.00% *	2038	27,900,000
W&S Refunding Bonds, Series 2016	2016	25,000,000	3.03%	2026	25,000,000
					$ 63,510,000

* Interest rates vary by maturity block of bonds.

CITY OF HATTIESBURG, MISSISSIPPI
COMBINED WATER AND SEWER SYSTEM

NOTES TO FINANCIAL STATEMENTS
PAGE TEN
YEAR ENDED SEPTEMBER 30, 2016

NOTE 6 - LONG-TERM LIABILITIES (Cont.)

State Revolving Loan Fund (SRF) Notes

In addition to general obligation and revenue bonds, the City has utilized financing available under the State of Mississippi Revolving Loan Fund (SRF) program to provide funds for qualified sewer projects. Monthly principal and interest payments for the repayment of these notes is deducted from the City's monthly sales tax diversion payments from the Mississippi Department of Revenue, with monthly reimbursements to the City's general fund being made from System operating revenues as authorized by the City's legally adopted budget. The SRF notes outstanding at September 30, 2016 were as follows:

State Revolving Loan Funds	Sale Date	Original Borrowing	Interest Rates to Maturity	Final Maturity	Outstanding 9/30/2016
SRF #2	1997	$ 2,165,672	4.50%	2017	$ 81,987
SRF #3	1999	1,268,863	4.50%	2019	212,467
					$ 294,454

Compensated Absences

The System accrues vested or accumulated vacation leave, holiday leave, and accrued overtime. The portion of such accrued compensated absences that is expected to be paid after one year is included in noncurrent liabilities. In accordance with the provisions of applicable accounting standards, no liability is recorded for nonvesting accumulating rights to receive sick pay benefits. Accrued compensated absences at September 30, 2016 consisted of the following:

Accrued vacation pay	$ 28,635

Refunding Bonds

In November 2015, the City issued $4,605,000 in Water and Sewer general obligation refunding bonds with an average interest rate of 2.00 to 3.00% to refund $4,605,000 of the 2009 General Obligation Water and Sewer Bonds, with an average remaining interest rate of 2.75 to 3.80%. The economic gain resulting from this transaction was a net present value benefit of $288,254.

CITY OF HATTIESBURG, MISSISSIPPI
COMBINED WATER AND SEWER SYSTEM

NOTES TO FINANCIAL STATEMENTS
PAGE ELEVEN
YEAR ENDED SEPTEMBER 30, 2016

NOTE 6 - LONG-TERM LIABILITIES (Cont.)

In August 2016, the City issued $7,125,000 in Water and Sewer general obligation refunding bonds with an average interest rate of 1.60% to refund $6,935,000 of the 2006 Water and Sewer Refunding Revenue Bonds, with an average remaining interest rate of 4.125 to 4.375%. The economic gain resulting from this transaction was a net present value benefit of $367,496.

CITY OF HATTIESBURG, MISSISSIPPI
COMBINED WATER AND SEWER SYSTEM

NOTES TO FINANCIAL STATEMENTS
PAGE TWELVE
YEAR ENDED SEPTEMBER 30, 2016

NOTE 6 - LONG-TERM LIABILITIES (Cont.)

Changes in Long-Term Liabilities

Changes in the System's long-term liabilities for the year ended September 30, 2016, are as follows:

	Balance 9/30/2015	Additions	Reductions	Adjustments	Balance 9/30/2016	Due Within One Year
Bonds and notes payable:						
General obligation bonds	$ 8,050,000	$ 11,730,000	$ (695,000)	$ (4,605,000)	$ 14,480,000	$ 2,069,000
Revenue bonds	47,210,000	25,000,000	(1,765,000)	(6,935,000)	63,510,000	2,735,000
State revolving loan funds	691,045	-	(396,591)	-	294,454	173,771
Unamortized premium on bonds	251,941	231,244	(45,384)	-	437,801	45,384
Total bonds and notes payable	56,202,986	36,961,244	(2,901,975)	(11,540,000)	78,722,255	5,023,155
Compensated absences	158,290	-	(21,224)	(108,431)	28,635	4,295
Long-term liabilities	$ 56,361,276	$ 36,961,244	$ (2,923,199)	$ (11,648,431)	$ 78,750,890	$ 5,027,450

Note: Adjustments represent refunding bond issues.

CITY OF HATTIESBURG, MISSISSIPPI
COMBINED WATER AND SEWER SYSTEM

NOTES TO FINANCIAL STATEMENTS
PAGE THIRTEEN
YEAR ENDED SEPTEMBER 30, 2016

NOTE 6 - LONG-TERM LIABILITIES (Cont.)

The debt service requirements for the System's bonds and notes are as follows:

Year Ending	G.O. Bonds and Notes		State Revolving Loan Funds	
September 30,	Principal	Interest	Principal	Interest
2017	$ 2,069,000	$ 297,766	$ 173,771	$ 8,763
2018	2,111,000	264,555	96,001	3,467
2019	2,159,000	225,154	24,681	185
2020	2,206,000	184,665	-	-
2021	2,260,000	145,109	-	-
2022-2026	2,680,000	317,170	-	-
2027-2030	995,000	81,372	-	-
Total	$ 14,480,000	$ 1,515,791	$ 294,453	$ 12,415

Year Ending	Revenue Bonds		Total Bonds and Notes	
September 30,	Principal	Interest	Principal	Interest
2017	$ 2,735,000	$ 2,297,469	$ 4,977,771	$ 2,603,998
2018	2,830,000	2,211,892	5,037,001	2,479,914
2019	3,010,000	2,124,593	5,193,681	2,349,932
2020	3,155,000	2,032,550	5,361,000	2,217,215
2021	3,240,000	1,936,961	5,500,000	2,082,070
2022-2026	21,645,000	7,853,315	24,325,000	8,170,485
2027-2031	10,705,000	4,805,615	11,700,000	4,886,987
2032-2036	9,745,000	2,635,644	9,745,000	2,635,644
2037-2039	6,445,000	471,852	6,445,000	471,852
Total	$ 63,510,000	$ 26,369,891	$ 78,284,453	$ 27,898,097

During the year ended September 30, 2016, interest expense paid for the System's long-term liabilities totaled $2,197,054.

CITY OF HATTIESBURG, MISSISSIPPI
COMBINED WATER AND SEWER SYSTEM

NOTES TO FINANCIAL STATEMENTS
PAGE FOURTEEN
YEAR ENDED SEPTEMBER 30, 2016

NOTE 7 - COMMITMENTS AND CONTINGENCIES

At September 30, 2016, the balances outstanding on construction projects in progress were as follows:

Water & Sewer Projects	$ 8,309,138

USA Yeast Facility - During fiscal year 2015, the City completed construction of a wastewater pretreatment facility, or evaporator plant for a manufacturing facility located within the City. Project costs were funded with CDBG Economic Development Grant funds and with private funds provided by the manufacturer. Under the terms of the grant agreement, the City has title to assets constructed with grant funds, and the manufacturing company owns the assets constructed with its funds. Pursuant to an agreement between the City and the company and to terms of the CDBG grant agreement, title to the equipment and components will transfer to the company upon expiration of the agreement on December 31, 2021. In conjunction with this project, the City has a ground lease for company property on which the evaporator plant is located. This lease requires payment of $1 per year and expires December 31, 2021.

Compliance with the Mississippi Department of Environmental Quality Order - Pursuant to its authority under the Clean Water Act, the Mississippi Department of Environmental Quality (MDEQ) issued permits to the City for discharges from the North and South Lagoons. In March 2013, Gulf Restoration Network (GRN) filed a complaint against the City under the Clean Water Act, alleging violations of the Permits. In August 2012, the Mississippi Commission on Environmental Quality (MCEQ) intervened. As a result of that intervention, the City was mandated to rehabilitate and improve its wastewater treatment system under an Agreed order executed, and subsequently amended, between the City and MDEQ. Under the amended Agreed order, the City was required to meet certain milestones or be subject to imposition of penalties.

Compliance with provisions and timelines established under the Amended Agreed order has required the City to pursue rehabilitation and improvement of the City's infrastructure and wastewater treatment systems in various project phases over a long-term period. Infrastructure improvements began in 2012 and are ongoing. System rehabilitation and improvement projects necessary to meet Amended Agreed Order mandates were estimated to cost approximately $125,000,000 to $159,000,000. However, upon subsequent amendment and then replacement by the Stipulated Order terminating the Amended Consent Judgment in August 2017, the City was conditionally relieved from its unpaid fines, penalties, and construction obligations imposed under the Amended Consent Judgment. See Note 10 – Subsequent Events for additional details related to the Stipulated Order.

CITY OF HATTIESBURG, MISSISSIPPI
COMBINED WATER AND SEWER SYSTEM

NOTES TO FINANCIAL STATEMENTS
PAGE FIFTEEN
YEAR ENDED SEPTEMBER 30, 2016

NOTE 7 - COMMITMENTS AND CONTINGENCIES (Cont.)

Although the City was subsequently granted relief from certain mandated sewer system improvements, the City expects to continue efforts to improve performance of its systems potentially requiring additional outlays. The City also anticipates additional future costs in connection with maintenance of the water and sewer system and in connection with current and future debt obligations related to infrastructure improvements, which may require significant incremental service rate increases in order to meet all applicable financial, contractual, and regulatory requirements.

Litigation **-** The City is party to various legal proceedings which normally occur in governmental operations. While the City cannot predict the results of any litigation, legal counsel for the City of Hattiesburg believes that it has meritorious defenses for those actions, proceedings and claims, or they are without merit or are of such kind, or involve such amounts, that unfavorable dispositions not covered by insurance resulting from such litigation would not materially affect the financial statements of the City of Hattiesburg, Mississippi. The City includes anticipated attorney fees for ongoing matters in its annual budget for the year in which such fees are incurred.

Federal Grants **-** In the normal course of operations, the City receives grant funds from various Federal and State agencies. The grant programs are subject to audit by agents of the granting authority, the purpose of which is to ensure compliance with conditions precedent to the granting of funds. Any liability for reimbursement which may arise as the result of these audits is not believed to be material.

Group Insurance Programs **-** The City obtains its workers' compensation, general and automobile liability insurance through certain group insurance programs of the Mississippi Municipal Service Company. Under these programs and pursuant to State of Mississippi regulations, participants are jointly and severally liable for claims incurred; however, the City has experienced no loss under such provisions and cannot reasonably estimate the amount or possibility of losses under these programs.

Self-Funded Health Insurance Program **-** The City provides health insurance to its employees under a self-insured program, as previously described. The City obtains reinsurance to protect against significant loss; however, under the terms of such reinsurance policies, the City is ultimately responsible for covered claims. While the City estimates and recognizes expected claims liabilities related to this program, the amount or possibility of any additional loss cannot be reasonably estimated.

CITY OF HATTIESBURG, MISSISSIPPI
COMBINED WATER AND SEWER SYSTEM

NOTES TO FINANCIAL STATEMENTS
PAGE SIXTEEN
YEAR ENDED SEPTEMBER 30, 2016

NOTE 8 - OTHER POSTEMPLOYMENT BENEFITS

The City's health insurance plan allows for retirees to obtain health insurance by participating in the City's health insurance plan. The City does not issue a publicly available financial report for the health insurance plan. Since retirees may obtain health insurance by participating in a group with active employees and consequently receive a health insurance premium rate differential, the City has a postemployment healthcare benefit reportable under GASB Statement 45, *Accounting and Financial Reporting by Employers for Postemployment Benefits Other Than Pensions* (OPEB), as a single employer defined benefit health care plan. The City has allocated $105,583 of its OPEB liability to the System as of September 30, 2016 based on proportionate health insurance program costs.

NOTE 9 - DEFINED BENEFIT PENSION PLAN

Plan Description

System personnel are employees of the City and, as such, participate in the Public Employees' Retirement System of Mississippi (PERS), a cost-sharing multiple-employer defined benefit pension plan administered by the PERS System Board of Trustees. PERS provides retirement and disability benefits, annual cost-of-living adjustments and death benefits to plan members and beneficiaries. Benefit provisions and the Board of Trustee's authority to determine contribution rates are established by State law and may be amended only by the State of Mississippi Legislature. The PERS System issues a publically available Comprehensive Annual Financial Report that includes financial information of the administered plans. That information may be obtained by writing to Public Employees Retirement System, PERS Building, 429 Mississippi Street, Jackson, Mississippi 39201-1005, or by calling (601) 359-3589 or 1-800-444-PERS. Financial reports are also available on the PERS System website at www.pers.ms.gov.

Participation and Funding Policy

The PERS System Board of Trustees establishes contribution rates for the PERS plan. Membership for the City's employees is a condition of employment, and eligibility is granted to those who qualify upon hiring. As specified by the Board of Trustees, members are required to contribute a percentage of their annual covered salary (9.00% since July 1, 2010) and the City is required to contribute at an actuarially determined rate, currently 15.75% of annual covered payroll. The System's allocated share of the City's contributions to PERS for the year ended September 30, 2016 totaled $291,229. As of September 30, 2016, $5,397 was payable to PERS for current employer contributions, to be remitted in the following month.

CITY OF HATTIESBURG, MISSISSIPPI
COMBINED WATER AND SEWER SYSTEM

NOTES TO FINANCIAL STATEMENTS
PAGE SEVENTEEN
YEAR ENDED SEPTEMBER 30, 2016

NOTE 9 - DEFINED BENEFIT PENSION PLAN (Cont.)

Pension Liability and Pension Expense

At September 30, 2016, the City has allocated $4,818,616 of its proportionate share of the collective net pension liability of the Cost-sharing Plan to the System based on the System's proportionate share of pension costs. The pension expense recognized by the System for the year ended September 30, 2016 totaled $549,397.

Deferred Outflows and Inflows of Resources Related to Pensions

The System reported $868,800 of deferred outflows of resources related to pensions and $9,374 of deferred inflows of resources related to pensions, as its proportionate share of the City's total deferred items related to pensions. These amounts include contributions made subsequent to the Cost-Sharing Plan's measurement date of June 30, 2016, and will be recognized as a reduction of the net pension liability in the year ending September 30, 2017. Other amounts reported as deferred outflows or resources and deferred inflows of resources related to pensions will be recognized as an addition to or (reduction of) pension expense over the next 4 years.

NOTE 10 - SUBSEQUENT EVENTS

Management has evaluated subsequent events after the financial statement date of September 30, 2016 through June 26, 2018, as that date is the date the audited financial statements were available to be issued. Significant subsequent events are described below:

Mississippi Department of Environmental Quality Consent Order - Stipulated Order Terminating Amended Consent Judgment

Subsequent to September 30, 2016, the MDEQ Agreed Order was further amended. The City failed to meet certain milestones and incurred penalties during the 2016 fiscal year totaling $319,500. In addition, the City has incurred costs totaling over $8 million during the 2016 fiscal year related to its comprehensive sewer rehabilitation project mandated under the agreed order. However, in August 2017, GRN, the City and MDEQ, the parties involved in the rehabilitation and improvement of the City's sewer system mandated under the Amended Agreed Order, negotiated a settlement. Pursuant to this settlement, a conditional Stipulated Order Terminating Amended Consent Judgment (the Stipulated Order) was entered on August 23, 2017.

CITY OF HATTIESBURG, MISSISSIPPI
COMBINED WATER AND SEWER SYSTEM

NOTES TO FINANCIAL STATEMENTS
PAGE EIGHTEEN
YEAR ENDED SEPTEMBER 30, 2016

NOTE 10 - SUBSEQUENT EVENTS (Cont.)

Terms of the Stipulated Order include submission of a revised permit request for the South Lagoon which incorporates certain monitoring requirements. Upon issuance of the amended permit and entry of a separate Agreed Order by the Mississippi Commission on Environmental Quality establishing a stipulated penalty of $1,500 per day for future violations, the Amended Consent Judgment will automatically terminate. The stipulated order further requires the City to provide certain effluent and performance information to GRN for a limited time.

As a result, the litigation aspect of this matter is conditionally concluded, and the City is also conditionally no longer liable for unpaid fines, penalties or construction obligations under the Amended Consent Judgment, subject to the City complying with terms of the Stipulated Order. The Stipulated Order precludes the City from having to immediately move forward to construct a fully mechanical wastewater treatment plant at an estimated cost exceeding $150 million, as was required by the Amended Consent Judgment. As a result of relief granted under the Stipulated Order, the City will suspend certain project elements that were in development and design stages as of September 30, 2016. The City expects that it will continue its efforts to improve the performance of the existing lagoon treatment system and also expects that modifications to the system may be recommended, potentially requiring additional capital outlays. However, the cost of any such improvements and modifications is not determinable at this time.

Matters Related to Funding

Subsequent to September 30, 2016, certain Federal and State grant reimbursements were delayed because of delinquency in submission of City annual financial reports. In addition, the City's credit rating was suspended in November 2016.

City of Hattiesburg, MS

200 Forrest St.
P.O. Box 1898
Hattiesburg, MS 39401

Master

File Number: 2018-669

File ID:	2018-669	**Type:**	Regular Agenda Item	**Status:**	Approved
Version:	1	**Reference:**		**In Control:**	City Council
Requester:				**File Created:**	07/31/2018
Brief Title:	Construction two-quote bid for roof repair at the Old Hattiesburg American Building.			**Final Action:**	
				Minute Book Number:	MB 2018-197

Title:

Acknowledge receipt of two-quote bids for the Old Hattiesburg American roof repair project and accept the bid of Malone Roofing Services, in the amount of $16,000.00 as the lowest and best bid received.(two-quote bids for construction project).

Notes:			
		Agenda Date:	08/07/2018
Indexes:		**Agenda Number:**	VII.-10
Sponsors:		**Enactment Date:**	
Attachments:	Pace Roofing, Eddie Pearson Roofing, Malone Roofing Services.	**Enactment Number:**	
Contact:		**Meeting Date:**	
Drafter:		**Effective Date:**	

History of Legislative File

Version:	Acting Body:	Date:	Action:	Sent To:	Due Date:	Return Date:	Result:
1	City Council	08/07/2018	Approved on the Routine Agenda				
	Action Text:	Approved on the Routine Agenda					

Text of Legislative File 2018-669

Title

Acknowledge receipt of two-quote bids for the Old Hattiesburg American roof repair project and accept the bid of Malone Roofing Services, in the amount of $16,000.00 as the lowest and best bid received.(two-quote bids for construction project).

Summary

Two quote bid for roof repair at the Old Hattiesburg American Building(Construction Project)

Budget Information

Expenditure Type

Purchasing Item

Publication Information

3530

CITY OF HATTIESBURG
QUOTE REQUEST RESPONSE FORM

Page No. 1
Date - 7/20/18
Order Number . . 2683 OQ

PACE ROOFING
16 TEMPLE RD
PETAL MS 39465-9502

Mail To. . . . . CITY OF HATTIESBURG
PURCHASING DIVISION
220 W FRONT ST.2ND FLOOR
PO BOX 1898
HATTIESBURG MS 39401

Phone Number . . 601 5454512

RINTED NAME Pace Roofing, LLC

IGNATURE [illegible] DATE 7/30/18

Shipping terms are F.O.B. destination, freight prepaid

ROJECT LINE: 825 N. MAIN-OLD HBURG AMERICAN-ROOF REPAIR

ITEM DESCRIPTION	Request Date	QTY	UM	Unit Price	Extended Cost	Delivery Date	Expired Date
VENDOR SHALL PROVIDE MATERIAL, LABOR AND EQUIPMENT TO REPAIR ROOF AT OLD HATTIESBURG AMERICAN BUILDING. VENDOR SHALL POWER WASH AROUND ALL CURBS, PENETRATIONS AND SEAMS ON LOWER ROOF IN WORK AREA. ONCE DRY CLEAN AND APPLY LIQUID FLASHING AND FABRIC TO ALL SEAMS, CURBS AND PENETRATIONS. ANY HOLES OR LOOSE PATCHES FOUND DURING REPAIRS ARE TO BE REPAIRED.	07/20/18	1.00	EA	-0-	-0-	7-30-18	9-15-18

TOTAL BID PRICE $40,000.00

45530

CITY OF HATTIESBURG
QUOTE REQUEST RESPONSE FORM

Page No. 1
Date 7/20/18
Order Number . . 2683 OQ

EDDIE PEARSON ROOFING, LL
PO BOX 1528
HATTIESBURG MS 39403-1528

Mail To. . . . . CITY OF HATTIESBURG
PURCHASING DIVISION
220 W FRONT ST.2ND FLOOR
PO BOX 1898
HATTIESBURG MS 39401

PRINTED NAME Eddie J. Pearson, Sr.

SIGNATURE DATE 7-30-18

Phone Number . . 601 5454512

Shipping terms are F.O.B. destination, freight prepaid

PROJECT NAME N. MAIN-OLD HBURG AMERICAN-ROOF REPAIR

ITEM DESCRIPTION	Request Date	QTY	UM	Unit Price	Extended Cost	Delivery Date	Expired Date
VENDOR SHALL PROVIDE MATERIAL, LABOR AND EQUIPMENT TO REPAIR ROOF AT OLD HATTIESBURG AMERICAN BUILDING. VENDOR SHALL POWER WASH AROUND ALL CURBS, PENETRATIONS AND SEAMS ON LOWER ROOF IN WORK AREA. ONCE DRY CLEAN AND APPLY LIQUID FLASHING AND FABRIC TO ALL SEAMS, CURBS AND PENETRATIONS. ANY HOLES OR LOOSE PATCHES FOUND DURING REPAIRS ARE TO BE REPAIRED.	07/20/18	1.00	EA	18,000.00	0	8-7-18	9-4-18

TOTAL BID PRICE $18,000.00

CITY OF HATTIESBURG
QUOTE REQUEST RESPONSE FORM

Page No. 1
Date 7/20/18
Order Number . . 2683 OQ

MALONE ROOFING SERVICES,
#1 COMMERCE DRIVE
HATTIESBURG MS 39402

Mail To. . . . . CITY OF HATTIESBURG
PURCHASING DIVISION
220 W FRONT ST 2ND FLOOR
PO BOX 1898
HATTIESBURG MS 39401

PRINTED NAME Wesley Alexander

Phone Number . . 601 5454512

SIGNATURE Wesley Alexander DATE 7-23-18

Shipping terms are F.O.B. destination, freight prepaid

PROJECT LINE: 825 N. MAIN-OLD HBURG AMERICAN-ROOF REPAIR

ITEM DESCRIPTION	Request Date	QTY	UM	Unit Price	Extended Cost	Delivery Date	Expi Date
VENDOR SHALL PROVIDE MATERIAL, LABOR AND EQUIPMENT TO REPAIR ROOF AT 825 N. HATTIESBURG AMERICAN BUILDING. VENDOR SHALL POWER WASH CURBS, PENETRATIONS AND SEAMS ON LOWER ROOF IN WORK AREA ONCE DRY CLEAN AND APPLY LIQUID FLASHING OR FABRIC TO ALL SEAMS, CURBS AND PENETRATIONS. ANY HOLES OR LOOSE PATCHES FOUND DURING REPAIRS ARE TO BE REPAIRED	07/20/18	1.00	EA	$16,000.00	0	7-23-18	8-31-

TOTAL BID PRICE $16,000.0

mcw
7-31-18

KE
7-31-18

City of Hattiesburg, MS

200 Forrest St.
P.O. Box 1898
Hattiesburg, MS 39401

Master

File Number: 2018-644

File ID:	2018-644	**Type:**	Regular Agenda Item	**Status:**	Approved
Version:	1	**Reference:**		**In Control:**	City Council
Requester:	Michael Pope			**File Created:**	07/27/2018
Brief Title:	Acknowledge receipt of unadvertised bid purchase docket report			**Final Action:**	
				Minute Book Number:	MB 2018-197

Title:

Acknowledge receipt of the two quote bid purchase docket report for the period of June 21, 2018, through July 26, 2018 as provided for in Section 31-7-13 (b) of the Mississippi Code of 1972.

Notes:			
		Agenda Date:	08/07/2018
Indexes:		**Agenda Number:**	VII.-11
Sponsors:		**Enactment Date:**	
Attachments:	08-07-UAB Docket	**Enactment Number:**	
Contact:		**Meeting Date:**	08/07/2018
Drafter:	Michael Pope	**Effective Date:**	

History of Legislative File

Version:	Acting Body:	Date:	Action:	Sent To:	Due Date:	Return Date:	Result:
1	City Council	08/07/2018	Approved on the Routine Agenda				
	Action Text:	Approved on the Routine Agenda					

Text of Legislative File 2018-644

Title

Acknowledge receipt of the two quote bid purchase docket report for the period of June 21, 2018, through July 26, 2018 as provided for in Section 31-7-13 (b) of the Mississippi Code of 1972.

Summary

Acknowledge receipt of two quote bid purchase docket report.

MAYOR
Toby Barker

COUNCIL - WARD ONE
Jeffrey George

COUNCIL - WARD TWO
Deborah Denard Delgado

COUNCIL - WARD THREE
Carter Carroll

COUNCIL - WARD FOUR
Mary Dryden

COUNCIL - WARD FIVE
Nicholas Brown

MEMORANDUM

TO: Mayor and Council

FROM: Michael Pope

DATE: July 27, 2018

SUBJECT: Unadvertised Bid Docket Acknowledgement

Attached is the unadvertised bid docket for the period of June 21, 2018 through July 26, 2018 covering purchases requiring the obtaining of a minimum of two (2) bids as defined in Section 31-7-13 (B) of the Mississippi Code.

This report is submitted for your review, approval, and acknowledgement on the minutes of the City Council. Should there be any questions, please feel free to contact my office.

MAP

CITY OF HATTIESBURG UNADVERTISED BID PURCHASES

SUCCESSFUL BID/ OTHER BID	BID RECEIVED	BID AWARDED	BID AMOUNT	PURCHASE ORDER	ITEM DESCRIPTION
SOLAR SUPPLY INC	06/22/18	07/09/18	4,479.98	181028	NEW 4 TON A/C UNIT FOR FIRST FLOOR I.T. DEP
HUGHES SUPPLY	06/13/18	07/09/18	14,855.32		
ESSCO HEATING AND A/C	06/28/18	07/09/18	18,447.75		
DOLEAC ELECTRIC CO INC	07/10/18	07/16/18	14,656.00	181186	INSTALL NEW SERVICE & REPLACE MAIN DISCONNE
CHAIN ELECTRIC COMPANY	07/13/18	07/16/18	17,200.00		
KEELING COMPANY (HATTIESBURG)	07/18/18	07/19/18	9,777.00	181309	36" CORRUGATED PIPE/TATUM PARK AND STOCK
SOUTHERN PIPE & SUPPLY CO INC	07/18/18	07/19/18	10,350.00		
PLAY IT AGAIN SPORTS	07/06/18	07/20/18	13,752.50	181322	HPR:FOOTBALL JERSEY 2018
J M H GRAPHICS	07/12/18	07/20/18	14,787.50		

BILL TO:
CITY OF HATTIESBURG
ACCOUNTING DEPT
PO BOX 1898
HATTIESBURG, MS 39403-1898
FAX INVOICE TO: 601-545-6661

CITY OF HATTIESBURG
P U R C H A S E O R D E R
THE CITY IS NOT LIABLE FOR SALES TAX ID# 64-6000432

POINT OF CONTACT:

Page - 1
Date - 07/09/18
PO No. - 181028
Req No. - 2676

VENDOR MAILING:
SOLAR SUPPLY INC
401 PROVIDENCE ST
HATTIESBURG MS 39402-1922

GRIFFIN, FRANCES (601) 5454654

VENDOR # 90014800

SHIP TO :
CITY OF HATTIESBURG
NOT APPLICABLE

PROCESSING CODE:

PROJECT LINE: NEW 4 TON A/C UNIT FOR FIRST FLOOR I.T. DEPT/CITY HALL

SEND METHOD 1 (601)5441770

Account #	Description	QTY	UM	UNIT COST	TOTAL COST
001092.5600	MITSUBISHI PLFY-EP48NEMU-E 4 WAY CEILING CASSETTE/4 TON	1.00	EA	1,302.1900	1,302.19
001092.5600	MITSUBISHI PUMY-P48NKMU1/480000 BTU OUTDOOR S SERIES	1.00	EA	2,428.5000	2,428.50
001092.5600	PAR-FL32MA-E	1.00	EA	79.2400	79.24
001092.5600	MITSUBISHI PAR-FA32MA - WIRELESS SIGNAL REC F/SEZ/SLZ/PEA (D) UNITS USING PAR-FL32MA CONTROLLER	1.00	EA	.0000	
001092.5600	LINESET MS MS3858125OMF 3/8X5/2X50' MINI SPLIT LINESET WITH FLARE NUT ENDS	2.00	EA	246.0600	492.12
001092.5600	HNYWL 14/4 STR TRAY CABLE PER FT	100.00	FF	.0000	
001092.5600	RHEEM 85-10001 LEAK LOCK TUBE 1.33 OZ	1.00	EA	5.4000	5.40
001092.5600	MITSUBISHI X87-711 BLUE DIAMOND MAXI BLUE 110V/RESERVOIR SENSOR BLUE DIAMOND MAXI BLUE 110V W/RESERVOIR	1.00	EA	150.8200	150.82
001092.5600	RITCHIE 60610 60613 WITH 60609 ADAPTER	1.00	EA	21.7100	21.71

TOTAL CONTRACT AMOUNT NOT TO EXCEED 4,479.98

SUBMIT SEPARATE INVOICES FOR EACH ORDER. PREPAY SHIPPING CHARGES IF ANY AND ADD TO INVOICE.

THIS PO NUMBER MUST APPEAR ON ALL PACKAGES & INVOICES.

FOR CORRECTIONS TO VENDOR ADDRESS ABOVE, CONTACT ACCOUNTING (601) 545-4686.

KERMAS EATON
CITY CLERK

43530

CITY OF HATTIESBURG
QUOTE REQUEST RESPONSE FORM

Page No 1
Date 6/21/18
Order Number . . 2676 OQ

SOLAR SUPPLY INC
401 PROVIDENCE ST
HATTIESBURG MS 39402-1922

Mail To. . . . CITY OF HATTIESBURG
PURCHASING DIVISION
220 W FRONT ST.2ND FLOOR
PO BOX 1898
HATTIESBURG MS 39401

PRINTED NAME Larry Duke

SIGNATURE Larry Duke DATE 6/22/18

Phone Number . . 601 5454512

Shipping terms are F.O.B. destination. freight prepaid

PROJECT LINE: NEW 4 TON A/C UNIT FOR FIRST FLOOR I.T. DEPT/CITY HALL

ITEM DESCRIPTION	Request Date	QTY	UM	Unit Price	Extended Cost	Delivery Date	Expired Date
MITSUBISHI PLFY-EP48NEMU-E 4 WAY CEILING CASSETTE/4 TON	06/12/18	1.00	EA	1016.63 291.56	1302.19		
MITSUBISHI PUMY-P48NKMU1/480000 BTU OUTDOOR S SERIES	06/12/18	1.00	EA	2428.50	2428.50		
PAR-FL32MA-E	06/12/18	1.00	EA	79.24	79.24		
MITSUBISHI PAR-FA32MA - WIRELESS SIGNAL REC F/SEZ/SLZ/PEA (D) UNITS USING PAR-FL32MA CONTROLLER	06/12/18	1.00	EA	N/A *	N/A		
LINESET MS MS38581250MF 3/8X5/2X50' MINI SPLIT LINESET WITH FLARE NUT ENDS	06/12/18 - wire included 14/3, 16/2	2.00	EA	246.06	492.12		
HNYWL 14/4 STR TRAY CABLE PER FT	06/12/18	100.00	FF	N/A	N/A		
RHEEM 85-10001 LEAK LOCK TUBE 1.33 OZ	06/12/18	1.00	EA	5.40	5.40		
MITSUBISHI X87-711 BLUE DIAMOND MAXI BLUE 110V/RESERVOIR SENSOR BLUE	06/12/18	1.00	EA	150.82	150.82		

Sub ASP MC UNIT

43530

CITY OF HATTIESBURG
QUOTE REQUEST RESPONSE FORM

Page No. 2
Date - 6/21/18
Order Number . 2676 OQ

PROJECT LINE: NEW 4 TON A/C UNIT FOR FIRST FLOOR I.T DEPT/CITY HALL

ITEM DESCRIPTION	Request Date	QTY	UM	Unit Price	Extended Cost	Delivery Date	Expired Date
DIAMOND MAXI BLUE 110V W/RESERVOIR							
RITCHIE 60610 60613 WITH 60609 ADAPTER	06/12/18	1.00	EA	1422 insert 749	2171		

TOTAL BID PRICE 4479 93

43530

CITY OF HATTIESBURG
QUOTE REQUEST RESPONSE FORM

Page No. 1
Date 6/12/18
Order Number . . 2676 OQ

HUGHES SUPPLY
1526 N MAIN ST
HATTIESBURG MS 39401-1972

Mail To. . . . . CITY OF HATTIESBURG
PURCHASING DIVISION
220 W FRONT ST.2ND FLOOR
PO BOX 1898
HATTIESBURG MS 39401

PRINTED NAME Shelby Smith

SIGNATURE Shelby Smith DATE 6/13/18

Phone Number . . 601 5454512

Shipping terms are F.O.B. destination, freight prepaid

PROJECT LINE: NEW 4 TON A/C UNIT FOR FIRST FLOOR I.T. DEPT/CITY HALL

ITEM DESCRIPTION	Request Date	QTY	UM	Unit Price	Extended Cost	Delivery Date	Expired Date
MITSUBISHI PLFY-EP48NEMU-E 4 WAY CEILING CASSETTE/4 TON	06/12/18	1.00	EA	1974.260	1974.26	6/27/18	7/5/18
MITSUBISHI PUMY-P48NKMU1/480000 BTU OUTDOOR S SERIES	06/12/18	1.00	EA	3290.543	3290.54	6/27/18	7/5/18
PAR-FL32MA-E	06/12/18	1.00	EA	60.00	60.00	6/27/18	7/5/18
MITSUBISHI PAR-FA32MA - WIRELESS SIGNAL REC F/SEZ/SLZ/PEA (D) UNITS USING PAR-FL32MA CONTROLLER	06/12/18	1.00	EA	89.60	89.60	6/27/18	7/5/18
LINESET MS MS38581250MF 3/8X5/2X50' MINI SPLIT LINESET WITH FLARE NUT ENDS	06/12/18	2.00	EA	155.31	310.62	6/27/18	7/5/18
HNYWL 14/4 STR TRAY CABLE PER FT	06/12/18	100.00	FF	.86	86.00	6/27/18	7/5/18
RHEEM 85-10001 LEAK LOCK TUBE 1.33 OZ	06/12/18	1.00	EA	5.39	5.39	6/27/18	7/5/18
MITSUBISHI X87-711 BLUE DIAMOND MAXI BLUE 110V/RESERVOIR SENSOR BLUE	06/12/18	1.00	EA	192.209	192.21	6/27/18	7/5/18

Jun 13 2018 07:15AM Hughes Supply PC535 6013305105 page 2

43530

CITY OF HATTIESBURG
QUOTE REQUEST RESPONSE FORM

Page No. 2
Date 6/12/18
Order Number . . 2676 OQ

PROJECT LINE: NEW 4 TON A/C UNIT FOR FIRST FLOOR I.T. DEPT/CITY HALL

ITEM DESCRIPTION	Request Date	QTY	UM	Unit Price	Extended Cost	Delivery Date	Expired Date
DIAMOND MAXI BLUE 110V W/RESERVOIR							
RITCHIE 60610 60613 WITH 60609 ADAPTER	06/12/18	1.00	EA	22.08	22.08	6/27/18	7/5/18

TOTAL BID PRICE 6030.70

Please note delivery will take 10 business days.

Jun 13 2018 07:15AM Hughes Supply PC535 6013305105 page 3

43530

CITY OF HATTIESBURG
QUOTE REQUEST RESPONSE FORM

Page No. 1
Date 6/14/18
Order Number . . 2676 OQ

ESSCO HEATING AND A/C
1502 N MAIN ST
PO BOX 111
HATTIESBURG MS 39403-0111

Mail To. . . . . CITY OF HATTIESBURG
PURCHASING DIVISION
220 W FRONT ST.2ND FLOOR
PO BOX 1898
HATTIESBURG MS 39401

PRINTED NAME Matt Brown

SIGNATURE Matt B DATE 6-28-18

Phone Number . . 601 5454512

Shipping terms are F.O.B. destination, freight prepaid

PROJECT LINE: NEW 4 TON A/C UNIT FOR FIRST FLOOR I.T. DEPT/CITY HALL

ITEM DESCRIPTION	Request Date	QTY	UM	Unit Price	Extended Cost	Delivery Date	Expired Date
MITSUBISHI PLFY-EP48NEMU-E 4 WAY CEILING CASSETTE/4 TON	06/12/18	1.00	EA	2400.00	2400.00	7/13/18	7/28/18
MITSUBISHI PUMY-P48NKMU1/480000 BTU OUTDOOR S SERIES	06/12/18	1.00	EA	4110.00	4110.00	7/13/18	7/28/18
PAR-FL32MA-E	06/12/18	1.00	EA	75.00	75.00	7/13/18	7/28/18
MITSUBISHI PAR-FA32MA - WIRELESS SIGNAL REC F/SEZ/SLZ/PEA (D) UNITS USING PAR-FL32MA CONTROLLER	06/12/18	1.00	EA	112.00	112.00	7/13/18	7/28/18
LINESET MS MS38581250MF 3/8X5/2X50' MINI SPLIT LINESET WITH FLARE NUT ENDS	06/12/18	2.00	EA	194.00	388.00	7/13/18	7/28/18
HNYWL 14/4 STR TRAY CABLE PER FT	06/12/18	100.00	FF	1.07	107.00	7/13/18	7/28/18
RHEEM 85-10001 LEAK LOCK TUBE 1.33 OZ	06/12/18	1.00	EA	6.75	6.75	7/13/18	7/28/18
MITSUBISHI X87-711 BLUE DIAMOND MAXI BLUE 110V/RESERVOIR SENSOR BLUE	06/12/18	1.00	EA	240.00	240.00	7/13/18	7/28/18

43530

CITY OF HATTIESBURG
QUOTE REQUEST RESPONSE FORM

Page No. 2
Date - 6/14/18
Order Number . . 2676 OQ

PROJECT LINE: NEW 4 TON A/C UNIT FOR FIRST FLOOR I.T. DEPT/CITY HALL

ITEM DESCRIPTION	Request Date	QTY	UM	Unit Price	Extended Cost	Delivery Date	Expired Date
DIAMOND MAXI BLUE 110V W/RESERVOIR							
RITCHIE 60610 60613 WITH 60609 ADAPTER	06/12/18	1.00	EA	28 00	28 00	7/13/18	7/28/18

TOTAL BID PRICE 7466.75

BILL TO:
CITY OF HATTIESBURG
ACCOUNTING DEPT
PO BOX 1898
HATTIESBURG, MS 39403-1898
FAX INVOICE TO: 601-545-6661

CITY OF HATTIESBURG
P U R C H A S E O R D E R
THE CITY IS NOT LIABLE FOR SALES TAX ID# 64-6000432

POINT OF CONTACT:

Page - 1
Date - 07/16/18

PO No. - 181186

Req No. - 2681

VENDOR MAILING:
DOLEAC ELECTRIC CO INC
PO BOX 1936
HATTIESBURG MS 39403-1936

WAITS, SHARON (601) 5454640
MINUTE BOOK # PENDING
VENDOR # 00012220

SHIP TO :
CITY OF HATTIESBURG
ENGINEERING/PUBLIC SERVICES
212 WEST FRONT STREET-CENTENNIAL BLDG
HATTIESBURG MS 39401

PROCESSING CODE:

PROJECT LINE: INSTALL NEW SERVICE & REPLACE MAIN DISCONNECT @ WELL BLDG

SEND METHOD 1 (601)5824121

Account #	Description	QTY	UM	UNIT COST	TOTAL COST
009677.6351	INSTALL NEW SERVICE INSTALLATION OF NEW ELECTRICAL SERVICE AND REPLACE MAIN DISCONNECT SWITCH AT THE WELL BUILDING AT THE ENTRANCE ROAD TO THE SOUTH LAGOON. SEE ATTACHMENT FOR COMPLETE SCOPE OF WORK.	1.00	EA	14,656.0000	14,656.00

TOTAL CONTRACT AMOUNT NOT TO EXCEED 14,656.00

SUBMIT SEPARATE INVOICES FOR EACH ORDER. PREPAY SHIPPING CHARGES IF ANY AND ADD TO INVOICE.

THIS PO NUMBER MUST APPEAR ON ALL PACKAGES & INVOICES.

FOR CORRECTIONS TO VENDOR ADDRESS ABOVE, CONTACT ACCOUNTING (601) 545-4686.

KERMAS EATON
CITY CLERK

43530

CITY OF HATTIESBURG
QUOTE REQUEST REQUEST FORM

Page No. 1
Date 7/10/18
Order Number 2681 OQ

DOLEAC ELECTRIC CO INC
[illegible]
HATTIESBURG MS 39403-1936

Mail To.
CITY OF HATTIESBURG
PURCHASING DIVISION
[illegible] ST.2ND FLOOR
PO BOX 1898
HATTIESBURG MS 39401

Phone Number 601 5454512

PRINTED NAME Doleac Electric Co Inc

SIGNATURE [illegible] DATE 7/10/2018

Shipping terms are F.O.B. destination, freight prepaid

PROJECT LINE INSTALL NEW SERVICE & REPLACE MAIN DISCONNECT @ WELL BLDG

ITEM DESCRIPTION	Request Date	QTY	UM	Unit Price	Extended Cost	Delivery Date	Expired Date
ELECTRICAL SERVICE AND REPLACE MAIN AT THE WELL BUILDING AT THE ENTRANCE ROAD COMPLETE SCOPE OF WORK	07/10/18	1 00	EA				

TOTAL BID PRICE $14,656.00

43530

CITY OF HATTIESBURG
QUOTE REQUEST RESPONSE FORM

Page No. 1
Date - 7/10/18
Order Number . . 2681 OQ

CHAIN ELECTRIC COMPANY
PO BOX 2058
HATTIESBURG MS 39403-2058

Mail To. . . . . CITY OF HATTIESBURG
PURCHASING DIVISION
220 W FRONT ST.2ND FLOOR
PO BOX 1898
HATTIESBURG MS 39401

Phone Number . . 601 5454512

PRINTED NAME Harvey Simmons

SIGNATURE Harvey Simmons DATE 7-13-2018 Shipping terms are F.O.B. destination, freight prepaid

PROJECT LINE: INSTALL NEW SERVICE & REPLACE MAIN DISCONNECT @ WELL BLDG

ITEM DESCRIPTION	Request Date	QTY	UM	Unit Price	Extended Cost	Delivery Date	Expired Date
INSTALL NEW SERVICE INSTALLATION OF NEW ELECTRICAL SERVICE AND REPLACE MAIN DISCONNECT SWITCH AT THE WELL BUILDING AT THE ENTRANCE ROAD TO THE SOUTH LAGOON. SEE ATTACHMENT FOR COMPLETE SCOPE OF WORK.	07/10/18	1.00	EA	$17,200.00	$17,200.00	8-20-18	9-14-18

TOTAL BID PRICE $17,200.00

BILL TO:
CITY OF HATTIESBURG
ACCOUNTING DEPT
PO BOX 1898
HATTIESBURG, MS 39403-1898
FAX INVOICE TO: 601-545-6661

CITY OF HATTIESBURG
P U R C H A S E O R D E R
THE CITY IS NOT LIABLE FOR SALES TAX ID# 64-6000432

POINT OF CONTACT:

Page - 1
Date - 07/19/18

PO No. - 181309

Req No. - 2682

VENDOR MAILING:
KEELING COMPANY (HATTIESBURG)
39 POWER LN
HATTIESBURG MS 39402-8563

EVANS, TERESA WILLIAMS (601) 5454626
MINUTE BOOK # PENDING

VENDOR # 90084681

SHIP TO :
CITY OF HATTIESBURG
PUBLIC WORKS DEPT
1202 JAMES STREET
HATTIESBURG MS 39401

PROCESSING CODE:

SEND METHOD 1 (601)2615265

PROJECT LINE: 36" CORRUGATED PIPE/TATUM PARK AND STOCK

Account #	Description	QTY	UM	UNIT COST	TOTAL COST
001201.5420	36" CORRUGATED PIPE	300.00	EA	32.5900	9,777.00

TOTAL CONTRACT AMOUNT NOT TO EXCEED 9,777.00

SUBMIT SEPARATE INVOICES FOR EACH ORDER. PREPAY SHIPPING CHARGES IF ANY AND ADD TO INVOICE.

THIS PO NUMBER MUST APPEAR ON ALL PACKAGES & INVOICES.

FOR CORRECTIONS TO VENDOR ADDRESS ABOVE, CONTACT ACCOUNTING (601) 545-4686.

KERMAS EATON
CITY CLERK

43530

CITY OF HATTIESBURG
QUOTE REQUEST RESPONSE FORM

Page No. 1
Date 7/18/18
Order Number . . . 2682 OQ

KEELING COMPANY (HATTIESB
39 POWER LN
HATTIESBURG MS 39402-8563

Mail To. . . . . CITY OF HATTIESBURG
PURCHASING DIVISION
220 W FRONT ST.2ND FLOOR
PO BOX 1898
HATTIESBURG MS 39401

Phone Number . . 601 5454512

PRINTED NAME JOE E KEELING JR

SIGNATURE Joe E K DATE 07/18/18

Shipping terms are F.O.B. destination, freight prepaid

PROJECT LINE: 36" CORRUGATED PIPE/TATUM PARK AND STOCK

ITEM DESCRIPTION	Request Date	QTY	UM	Unit Price	Extended Cost	Delivery Date	Expired Date
36" CORRUGATED PIPE	07/18/18	300.00	EA	$32.59/FT	$9777.00	~~4-5 DAYS~~ ARO	08/01/18

TOTAL BID PRICE $9,777.00

$$ for complete order - no partials

R 50

7/19/18

43530

CITY OF HATTIESBURG
QUOTE REQUEST RESPONSE FORM

Page No. 1
Date - 7/18/18
Order Number . . 2682 OQ

SOUTHERN PIPE & SUPPLY CO
116 LUNDY LN
PO BOX 1511
HATTIESBURG MS 39401

Mail To. . . . . CITY OF HATTIESBURG
PURCHASING DIVISION
220 W FRONT ST.2ND FLOOR
PO BOX 1898
HATTIESBURG MS 39401

PRINTED NAME Stacey Swafford

Phone Number . . 601 5454512

SIGNATURE Stacey Swafford DATE 07/18/2018

Shipping terms are F.O.B. destination, freight prepaid

PROJECT LINE: 36" CORRUGATED PIPE/TATUM PARK AND STOCK

ITEM DESCRIPTION	Request Date	QTY	UM	Unit Price	Extended Cost	Delivery Date	Expired Date
36" CORRUGATED PIPE	07/18/18	300.00	EA	34.50	10350.00	2 days	7 da

TOTAL BID PRICE 10,350.00

BILL TO:
CITY OF HATTIESBURG
ACCOUNTING DEPT
PO BOX 1898
HATTIESBURG, MS 39403-1898
FAX INVOICE TO: 601-545-6661

CITY OF HATTIESBURG
P U R C H A S E O R D E R
THE CITY IS NOT LIABLE FOR SALES TAX ID# 64-6000432

POINT OF CONTACT:

Page - 1
Date - 07/19/18

PO No. - 181322

Req No. - 2680

VENDOR MAILING:
3J SPORTS INC
dba PLAY IT AGAIN SPORTS
4400 HARDY STREET, SUITE A-12
HATTIESBURG MS 39402

LEWIS, AKIRA (601) 5454667
MINUTE BOOK # PENDING
VENDOR # 00081970

SHIP TO :
CITY OF HATTIESBURG
REC-RECREATION CENTER(OLD YMCA)
300 N 12TH AVENUE
HATTIESBURG MS 39401

PROCESSING CODE:

PROJECT LINE: HPR:FOOTBALL JERSEY 2018

SEND METHOD 1 (601)2688917

Account #	Description	QTY	UM	UNIT COST	TOTAL COST
002315.5510	YOUTH XSMALL	25.00	EA	39.5000	987.50
002315.5510	YOUTH SMALL	65.00	EA	39.5000	2,567.50
002315.5510	YOUTH MEDIUM	85.00	EA	39.5000	3,357.50
002315.5510	YOUTH LARGE	45.00	EA	39.5000	1,777.50
002315.5510	ADULT SMALL	25.00	EA	39.5000	987.50
002315.5510	ADULT MEDIUM	25.00	EA	39.5000	987.50
002315.5510	ADULT LARGE	25.00	EA	39.5000	987.50
002315.5510	ADULT XLARGE	25.00	EA	39.5000	987.50
002315.5510	ADULT XXLARGE	25.00	EA	44.5000	1,112.50

SEE ATTACHMENT FOR COLORS, LOGO, AND DESCRIPTION
JERSEYS MUST BE DELIVERED BY 8/30/2018

TOTAL CONTRACT AMOUNT NOT TO EXCEED 13,752.50

SUBMIT SEPARATE INVOICES FOR EACH ORDER. PREPAY SHIPPING CHARGES IF ANY AND ADD TO INVOICE.

THIS PO NUMBER MUST APPEAR ON ALL PACKAGES & INVOICES.

FOR CORRECTIONS TO VENDOR ADDRESS ABOVE, CONTACT ACCOUNTING (601) 545-4686.

KERMAS EATON
CITY CLERK

43c30

CITY OF HATTIESBURG
QUOTE REQUEST RESPONSE FORM

Page No. 1
Date 7/06/18
Order Number 2680 00

3J SPORTS INC
dba PLAY IT AGAIN SPORTS
4400 HARDY STREET SUITE
HATTIESBURG MS 39402

Mail To CITY OF HATTIESBURG
PURCHASING DIVISION
220 W FRONT ST 2ND FLOOR
PO BOX 1898
HATTIESBURG MS 39401

Phone Number 601 5454512

PRINTED NAME Play It Again Sports

SIGNATURE _____ DATE 7/6/2018

Shipping terms are F.O.B. Destination freight prepaid

PROJECT LINE: MPR:FOOTBALL JERSEY 2018

ITEM DESCRIPTION	Request Date	QTY	UM	Unit Price	Extended Cost	Delivery Date	Expired Date
YOUTH XSMALL	07/05/18	25.00	EA	39.50	987.50	8/29	
YOUTH SMALL	07/05/18	65.00	EA	39.50	2567.50	8/29	
YOUTH MEDIUM	07/05/18	85.00	EA	39.50	3357.50	8/29	
YOUTH LARGE	07/05/18	45.00	EA	39.50	1777.50	8/29	
ADULT SMALL	07/05/18	25.00	EA	39.50	987.50	8/29	
ADULT MEDIUM	07/05/18	25.00	EA	39.50	987.50	8/29	
ADULT LARGE	07/05/18	25.00	EA	39.50	987.50	8/29	
ADULT XLARGE	07/05/18	25.00	EA	39.50	987.50	8/29	
ADULT XXLARGE	07/05/18	25.00	EA	44.50	1112.50	8/29	
SEE ATTACHMENT FOR COLORS, LOGO, AND DESCRIPTION JERSEYS MUST BE DELIVERED BY 8/30/2018		345					

$50

TOTAL BID PRICE 13,752.50

7-19-18

43530

CITY OF HATTIESBURG
QUOTE REQUEST RESPONSE FORM

Page No. 1
Date 7/06/18
Order Number . . 2680 00

JASON SPIERS
J M H GRAPHICS
223 S 40TH AVE
HATTIESBURG MS 39402-1604

Mail To. . . . . CITY OF HATTIESBURG
PURCHASING DIVISION
220 W FRONT ST.2ND FLOOR
PO BOX 1898
HATTIESBURG MS 39401

PRINTED NAME J M H Graphics

SIGNATURE Melvin Spier DATE 7/12/18

Phone Number . . 601 5454512

Shipping terms are F.O.B. destination, freight prepaid

PROJECT LINE. MPR:FOOTBALL JERSEY 2018

ITEM DESCRIPTION	Request Date	QTY	UM	Unit Price	Extended Cost	Delivery Date	Expired Date
YOUTH XSMALL	07/05/18	25.00	EA	4 250	106 250	8/29	
YOUTH SMALL	07/05/18	65.00	EA	4250	2762 50	8/29	
YOUTH MEDIUM	07/05/18	85.00	EA	4250	3612 50	8/29	
YOUTH LARGE	07/05/18	45.00	EA	4250	1912 50	8/29	
ADULT SMALL	07/05/18	25.00	EA	4250	1062 50	8/29	
ADULT MEDIUM	07/05/18	25.00	EA	4250	1062 50	8/29	
ADULT LARGE	07/05/18	25.00	EA	4250	1062 50	8/29	
ADULT XLARGE	07/05/18	25.00	EA	4250	1062 50	8/29	
ADULT XXLARGE	07/05/18	25.00	EA	4750	1187 50	8/29	

SEE ATTACHMENT FOR COLORS, LOGO, AND DESCRIPTION
JERSEYS MUST BE DELIVERED BY 8/31/2018

TOTAL BID PRICE 14,787 50

City of Hattiesburg, MS

200 Forrest St.
P.O. Box 1898
Hattiesburg, MS 39401

Master

File Number: 2018-642

File ID:	2018-642	**Type:**	Regular Agenda Item	**Status:**	Approved
Version:	1	**Reference:**		**In Control:**	City Council
Requester:	Colton Hill			**File Created:**	07/26/2018
Brief Title:	Approve Specifications and Authorize Publication of Advertisement for Various Term Bid Items			**Final Action:**	
				Minute Book Number:	MB 2018-197

Title:

Approve Specifications and Authorize Publication of Advertisement for Various Term Bid Items

Notes:			
		Agenda Date:	08/07/2018
Indexes:		**Agenda Number:**	VII.-12
Sponsors:		**Enactment Date:**	
Attachments:	Item 21 - Sand, Gravel, and Fill Dirt Notice to Bidders, Item 21 - Sand, Gravel, and Fill Dirt Specs, Item 23 - Corrugated HDPE Notice to Bidders, Item 23 - Corrugated HDPE Specs, Item 24 - Rock for Riprap Notice to Bidders, Item 24 - Rock for Riprap Specs	**Enactment Number:**	
Contact:		**Meeting Date:**	08/07/2018
Drafter:	Michael Pope	**Effective Date:**	

History of Legislative File

Version:	Acting Body:	Date:	Action:	Sent To:	Due Date:	Return Date:	Result:
1	City Council	08/07/2018	Approved on the Routine Agenda				
	Action Text:	Approved on the Routine Agenda					

Text of Legislative File 2018-642

Title

Approve Specifications and Authorize Publication of Advertisement for Various Term Bid Items

Summary

Approve Specifications and Authorize Publication of Advertisement for Various Term Bid Items

NOTICE TO BIDDERS

ITEM #21:

SAND, GRAVEL, AND FILL DIRT FOR THE PUBLIC SERVICES DEPARTMENT

Notice is hereby given that the Mayor and Council of the City of Hattiesburg will receive bids in the following manner:

Un-priced bid proposals will be accepted until 10:00 a.m. on Thursday, August 23rd, 2018, by electronic bid submission or in sealed envelopes at the Office of the City Clerk, 200 Forrest Street, Hattiesburg, MS 39401.

Specifications and procedures can be obtained upon request at the Office of the City Clerk or can be downloaded from Central Bidding at www.centralbidding.com. All bids must comply with the specifications provided. The City of Hattiesburg reserves the right to amend the specifications, as necessary, and agrees to notify all having requested bid packets.

Submissions will be evaluated and vendors submitting acceptable offers will be invited to submit priced bids via reverse auction. Reverse auction bids can be submitted at www.centralbidding.com. For any questions relating to the electronic bidding process, please call Central Bidding at 225-810-4814.

Qualified bidders will be invited to participate in a reverse auction, which will take place on Thursday, September 6th, 2018, at 10:00 a.m.

The City reserves the right to extend the auction time or date if necessary to complete the pre-qualification process.

The lowest and best bid received will be accepted, subject to the provisions of Section 31-7-13 of the Mississippi Code of 1972, Annotated as Amended, and other applicable state law; but the City reserves the right to reject all bids and to waive formalities.

Published by Order of the Council on this, the 7th day of August, 2018.

CITY OF HATTIESBURG, MISSISSIPPI

_____

CITY CLERK

SPECIFICATIONS FOR ITEM #21:
SAND, GRAVEL AND FILL DIRT FOR THE PUBLIC SERVICES DEPARTMENT

Bidder shall quote prices per ton on the following:

Washed Road Gravel	Shaker Sand
Concrete Gravel	Concrete Sand
Pea Gravel	Mason Sand
Torpedo Gravel	Road Bed Topping
Crushed Gravel	

Bidder shall quote prices per cubic yard on the following:

Clay Gravel
Top Soil
Fill Dirt (Plastic Index - P.I. 10-15)

PAYMENT TERMS: Remittance within thirty (30) days from satisfactory delivery of goods and/or receipt of invoice(s).

PRICES shall be FIRM for a period beginning with the official acceptance of the winning bid, and ending March 31, 2020, items to be purchased as required.

The City of Hattiesburg and/or the vendor has the option to terminate the contract after a period of one year.

DELIVERY: Prices to be given for above items dumped in City trucks at pit, and F.O.B. Hattiesburg, Mississippi, hauled and placed at job site as directed by the City.

The lowest and best bid received will be accepted, subject to the provisions of Section 31-7-13 of the Mississippi Code of 1972, Annotated as Amended, and other applicable State law; but the Council reserves the right to reject any and all bids received and to waive informalities.

APPROVED on this, the 7TH day of August, 2018.

CITY OF HATTIESBURG, MISSISSIPPI

BY:_____
CITY CLERK

SPECIFICATIONS APPROVED BY:

_____
Public Services Department

NOTICE TO BIDDERS

ITEM #23:

CORRUGATED HDPE DRAINAGE PIPE FOR THE PUBLIC SERVICES DEPARTMENT

Notice is hereby given that the Mayor and Council of the City of Hattiesburg will receive bids in the following manner:

Un-priced bid proposals will be accepted until 10:00 a.m. on Thursday, August 23rd, 2018, by electronic bid submission or in sealed envelopes at the Office of the City Clerk, 200 Forrest Street, Hattiesburg, MS 39401.

Specifications and procedures can be obtained upon request at the Office of the City Clerk or can be downloaded from Central Bidding at www.centralbidding.com. All bids must comply with the specifications provided. The City of Hattiesburg reserves the right to amend the specifications, as necessary, and agrees to notify all having requested bid packets.

Submissions will be evaluated and vendors submitting acceptable offers will be invited to submit priced bids via reverse auction. Reverse auction bids can be submitted at www.centralbidding.com. For any questions relating to the electronic bidding process, please call Central Bidding at 225-810-4814.

Qualified bidders will be invited to participate in a reverse auction, which will take place on Thursday, September 6th, 2018, at 10:00 a.m.

The City reserves the right to extend the auction time or date if necessary to complete the pre-qualification process.

The lowest and best bid received will be accepted, subject to the provisions of Section 31-7-13 of the Mississippi Code of 1972, Annotated as Amended, and other applicable state law; but the City reserves the right to reject all bids and to waive formalities.

Published by Order of the Council on this, the 7th day of August, 2018.

CITY OF HATTIESBURG, MISSISSIPPI

_____

CITY CLERK

SPECIFICATIONS FOR ITEM #23: CORRUGATED HDPE DRAINAGE PIPE FOR THE PUBLIC SERVICES DEPARTMENT

Bidder shall bid on furnishing Corrugated HDPE Drainage Pipe for the Public Services Department, which meets or exceeds the following specifications to-wit:

All corrugated HDPE drainage pipe shall be in accordance with ASTM D 1248, ASTM D 3350, ASTM D 2412, ASTM F 667, ASTM F 405 and AASHTO M 294. Smooth interior plastic pipe will have a Manning's "N" coefficient in a range of 0.012 to 0.015. Corrugated plastic pipe will be self coupling to comply with ASTM F477 and D3212 specifications for Elastomeric seals (gaskets) for joining plastic pipe.

Prices will be required for the following sizes:

SMOOTH INTERIOR PIPE WITH RUBBER GASKET JOINTS			
SIZE	PER LINEAR FOOT	SIZE	PER LINEAR FOOT
12"		30"	
15"		36"	
18"		42"	
24"		48"	

DELIVERY: F.O.B. Hattiesburg, Mississippi, to the address shown on the Purchase Order. All deliveries shall be within the Corporate Limits of the City of Hattiesburg, within fifteen (15) days from receipt of Purchase Order.

PRICES shall be FIRM for a period beginning with the official acceptance of the winning bid, and ending March 31, 2020, items to be purchased as required.

The City of Hattiesburg and/or the vendor has the option to terminate the contract after a period of

one year.

PAYMENT TERMS: Remittance within thirty (30) days from satisfactory delivery of goods and/or receipt of invoice(s).

The lowest and best bid received will be accepted, subject to the provisions of Section 31-7-13 of the Mississippi Code of 1972, Annotated as Amended, and other applicable State law; but the Council reserves the right to reject any and all bids received and to waive informalities.

APPROVED on this, the 7TH day of August A. D., 2018.

CITY OF HATTIESBURG, MISSISSIPPI

BY:_____

CITY CLERK

SPECIFICATIONS APPROVED BY:

_____

PUBLIC SERVICES DEPARTMENT

NOTICE TO BIDDERS

ITEM #24:

ROCK FOR RIPRAP FOR THE PUBLIC SERVICES DEPARTMENT

Notice is hereby given that the Mayor and Council of the City of Hattiesburg will receive bids in the following manner:

Un-priced bid proposals will be accepted until 10:00 a.m. on Thursday, August 23rd, 2018, by electronic bid submission or in sealed envelopes at the Office of the City Clerk, 200 Forrest Street, Hattiesburg, MS 39401.

Specifications and procedures can be obtained upon request at the Office of the City Clerk or can be downloaded from Central Bidding at www.centralbidding.com. All bids must comply with the specifications provided. The City of Hattiesburg reserves the right to amend the specifications, as necessary, and agrees to notify all having requested bid packets.

Submissions will be evaluated and vendors submitting acceptable offers will be invited to submit priced bids via reverse auction. Reverse auction bids can be submitted at www.centralbidding.com. For any questions relating to the electronic bidding process, please call Central Bidding at 225-810-4814.

Qualified bidders will be invited to participate in a reverse auction, which will take place on Thursday, September 6th, 2018, at 10:00 a.m.

The City reserves the right to extend the auction time or date if necessary to complete the pre-qualification process.

The lowest and best bid received will be accepted, subject to the provisions of Section 31-7-13 of the Mississippi Code of 1972, Annotated as Amended, and other applicable state law; but the City reserves the right to reject all bids and to waive formalities.

Published by Order of the Council on this, the 7th day of August, 2018.

CITY OF HATTIESBURG, MISSISSIPPI

_____

CITY CLERK

SPECIFICATIONS FOR ITEM #24: ROCK FOR RIPRAP FOR THE PUBLIC SERVICES DEPARTMENT

Bidder shall bid on furnishing Rock for Riprap for the Public Services Department, which meets or exceeds the following specifications to-wit:

SCOPE

This specification covers the quality of rock to be used in the construction of rock riprap.

QUALITY

Individual rock fragments shall be dense, sound and free from cracks, seams and other defects conducive to accelerated weathering. The rock fragments shall be angular to subrounded in shape. The least dimension of an individual rock fragment shall be not less than one-third the greatest dimension of the fragment.

Except as provided below, the rock shall have the following properties:

a. Bulk specific gravity (saturated surface-dry basis) not less than 2.5.

b. Absorption not more than 2 percent.

c. Soundness: Weight loss in 5 cycles not more than 10 percent when sodium sulfate is used or 15 percent when magnesium sulfate is used.

The bulk specific gravity and absorption shall be determined by ASTM Method C 127. The test for soundness shall be performed by ASTM Method C 88 for coarse aggregate modified as follows:

The test sample shall not be separated into fractions. It shall consist of 5000 +/- 300 grams of rock fragments, reasonably uniform in size and shape and weighing approximately 100 grams each, obtained by breaking the rock and selecting fragments of the required size.

After the sample has been dried, following completion of the final test cycle and washing to remove the sodium sulfate or magnesium sulfate, the loss of weight shall be determined by subtracting from the original weight of the sample the final weight of all fragments which have not broken into three or more pieces.

The report shall show the percentage loss of weight and the results of the qualitative examination.

Rock that fails to meet the requirements stated in a, b, and c above, may be accepted only if similar rock from the same source has been demonstrated to be sound after five (5) years or more of service under conditions of weather, wetting and drying, and erosive forces similar to those anticipated for the rock to be installed under this specification.

GRADATION FOR RIPRAP

STONES, WEIGHT, LBS.	CUMULATIVE PERCENT LIGHTER BY WEIGHT
200	100
80	50 - 100
40	15 - 50
10	0 - 15

STONES, WEIGHT, LBS.	CUMULATIVE PERCENT LIGHTER BY WEIGHT
140	100
60	50 - 100
30	15 - 50
10	0 - 15

NOTE: Spalls and rock dust that will pass a 3" sieve shall consist of more than 5% by weight.

CRUSHED LIMESTONE			
CODE	DESCRIPTION	CODE	DESCRIPTION
300	ASTM #3	610	610 MS A-BASE
400	AHD 4/AREA	670	#67
500	ASTM #5	882	AHD CSB TY, A/COE #3
560	56 LIMESTONE	700	ASTM #7

570	67 CONCRETE	821	1/4" MOD
599	1½" TOWER, #1 CRUSHER RUN	890	ASTM #89

DELIVERY: F.O.B. Hattiesburg, Mississippi, Public Services Barn, 1202 James Street. All deliveries shall be within thirty (30) days from receipt of Purchase Order. Successful bidder shall be responsible for site delivery including unloading of rail car.

PRICES shall be FIRM for a period beginning with the official acceptance of the winning bid, and ending March 31, 2020, items to be purchased as required.

The City of Hattiesburg and/or the vendor has the option to terminate the contract after a period of one year.

PAYMENT TERMS: Remittance within thirty (30) days from satisfactory delivery of goods and/or receipt of invoice(s).

The lowest and best bid received will be accepted, subject to the provisions of Section 31-7-13 of the Mississippi Code of 1972, Annotated as Amended, and other applicable State law; but the Council reserves the right to reject any and all bids received and to waive informalities.

APPROVED on this, the 7TH day of August A. D., 2018.

CITY OF HATTIESBURG, MISSISSIPPI

BY:_____

CITY CLERK

SPECIFICATIONS APPROVED BY:

_____

PUBLIC SERVICES DEPARTMENT

City of Hattiesburg, MS

200 Forrest St.
P.O. Box 1898
Hattiesburg, MS 39401

Master

File Number: 2018-659

File ID:	2018-659	**Type:**	Regular Agenda Item	**Status:**	Approved
Version:	1	**Reference:**		**In Control:**	City Council
Requester:	Lamar Rutland			**File Created:**	07/30/2018
Brief Title:	Approve Bobby L. Chain Airport Apron Restoration project			**Final Action:**	
				Minute Book Number:	MB 2018-197

Title:

Approve plans and specifications for the Bobby L. Chain Airport Apron Restoration Part 1 Project; Authorize advertisement for bids for same.

Notes:			
		Agenda Date:	08/07/2018
Indexes:		**Agenda Number:**	VII.-13
Sponsors:		**Enactment Date:**	
Attachments:	Section A - Advertisement for Bidders 7.30.2018 revised (002), Plans, Specifications Part 1	**Enactment Number:**	
Contact:		**Meeting Date:**	08/07/2018
Drafter:	Sharon Waits	**Effective Date:**	

History of Legislative File

Version:	Acting Body:	Date:	Action:	Sent To:	Due Date:	Return Date:	Result:
1	City Council	08/07/2018	Approved on the Routine Agenda				
	Action Text:	Approved on the Routine Agenda					

Text of Legislative File 2018-659

Title

Approve plans and specifications for the Bobby L. Chain Airport Apron Restoration Part 1 Project; Authorize advertisement for bids for same.

Summary

Approve plans and specifications for the Bobby L. Chain Airport Apron Restoration Part 1 Project; Authorize advertisement for bids for same.

Budget Information

039551.7295.xx

Expenditure Type

Grant 100% reimburseable by FAA

CONTRACT DOCUMENTS

SECTION A: ADVERTISEMENT FOR BIDDERS

Proof of Publication Required.

SEALED BIDS for construction of the following will be received by the City of Hattiesburg in the City Clerks Office, City Hall, Hattiesburg, MS 39401 until 10:00 a.m. Central Time on September 7, 2018 for Hattiesburg-Bobby L. Chain Apron Restoration Part I (A.I.P. Project No. 3-28-0031-0026-2018) for the City of Hattiesburg.

This project shall generally consist of work which includes: earthwork, base, paving, marking and turfing.

Each bid shall generally be accompanied by a bid bond, certified check or cashier's check for an amount equal to five (5) percent of the total base bid.

Bids will be publicly opened and read aloud. Any bid received after closing time will be returned unopened.

Copies of the Contract Documents are on file at the City Engineering Office, 212 West Front Street, Hattiesburg, MS 39401 and are open for public inspection.

Contract documents may be examined and secured by licensed contractors, sub-contractors, and material suppliers from ARE Consultants, Inc. at (318)222-8252. Plans are available upon deposit of One Hundred Dollars ($100.00) per set for each set obtained. Direct questions to the Engineer at (318) 222-8252. The deposit will be refunded upon return of the drawings and specifications in good condition within ten (10) days after date of opening of bids.

Official bid documents may be downloaded from Central Bidding at www.centralbidding.com . Electronic bids may be submitted at www.centralbidding.com.

Evidence that a Contractor holds a valid Mississippi Contractor's License must be presented prior to release of bidding documents and/or submittal of a bid proposal. The required classification is Highway, Street, and Bridge Construction.

It is the policy of the Department of Transportation (DOT) that disadvantaged business enterprises as defined in 49 CFR Part 23 shall have the maximum opportunity to participate in the performance of contracts financed in whole or part with Federal funds.

The proposed contract is subject to the Buy American provision under Section 9129 of the Aviation Safety and Capacity Expansion Act of 1990. Details of such requirements are contained in the specifications.

The following question will be asked of all bidders: "Has the bidder defaulted on a contract or ever been involved in litigation with a political subdivision of the State of Mississippi or any other state or country?" _____ YES _____NO If "YES," please supply full details.

The City of Hattiesburg reserves the right to reject any or all bids and to waive informalities.

The bids shall be presented in a sealed envelope marked:

Bobby L. Chain Airport
Apron Restoration Part I
A.I.P Project No. 3-28-0031-0026-2018
for the City of Hattiesburg.

BID DATE: September 7, 2018 10:00 a.m. Central Time

A mandatory pre-bid conference is scheduled for 10:00 a.m. Tuesday, August 28, 2018, in the Airport Conference Room, 29 Academy Drive, Hattiesburg Bobby L. Chain Airport, Hattiesburg, MS.

By: City Clerk
City of Hattiesburg

Dates of Publication:

The Post
Thursday, August 9, 2018
Thursday, August 16, 2018

Clarion Ledger
Thursday, August 9, 2018
Thursday, August 16, 2018

PLANS OF PROPOSED
CITY OF HATTIESBURG
BOBBY L. CHAIN MUNICIPAL AIRPORT
APRON RESTORATION PART 1

CITY OF HATTIESBURG, MISSISSIPPI
FORREST COUNTY

AIP NO. 3-28-0031-0026-2018

JULY 2018

INDEX TO SHEET

SHEET NO.	DESCRIPTION
02	GENERAL LAYOUT PLAN
03	QUANTITIES AND GENERAL NOTES
04	SEQUENCE OF CONSTRUCTION
05	PAVING AND DRAINAGE PLAN
06	PAVING PLAN
07	TYPICAL SECTIONS AND DETAILS
08	JOINT DETAILS AND MISCELLANEOUS DETAILS
09	PAVEMENT MARKING AND DETAILS

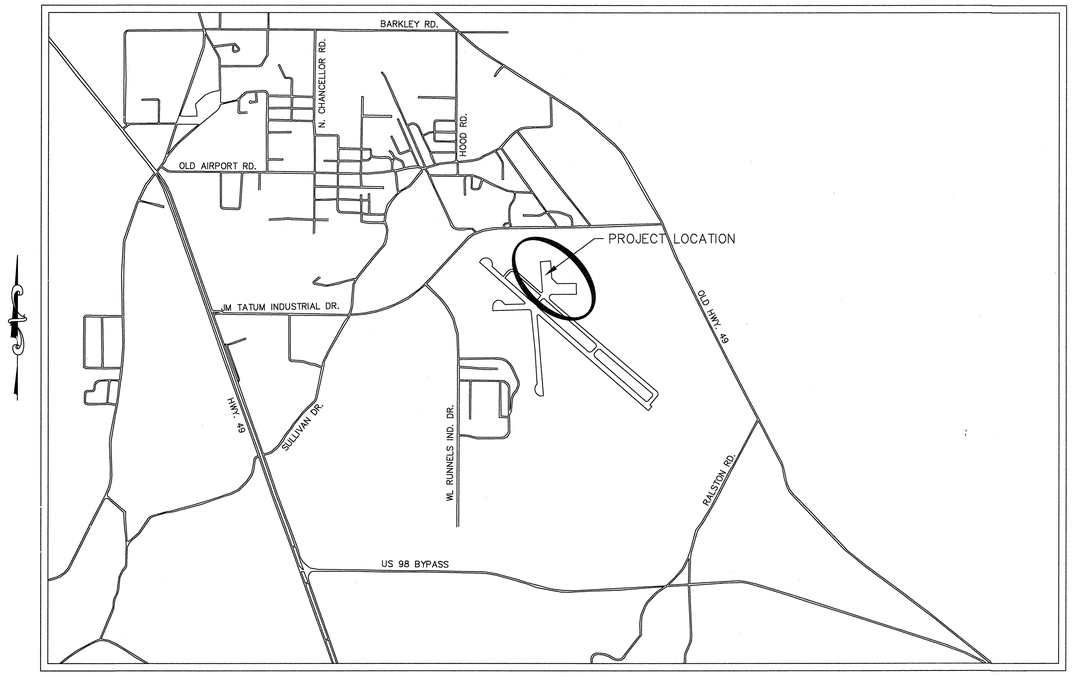

LOCATION MAP

TYPE OF CONSTRUCTION: PC CONCRETE PAVING, ASPHALTIC PAVED TRANSITIONS, DRAINAGE, MARKING

SCHEDULE OF REVISIONS

DATE	RECOMMENDED	DATE	REVISION	DATE	APPROVED

MAYOR
TOBY BARKER

CITY COUNCIL
JEFFREY GEORGE, WARD 1
DEBORAH DELGADO, WARD 2
CARTER CARROLL, WARD 3
MARY DRYDEN, WARD 4
NICHOLAS BROWN, WARD 5

SUBMITTED BY:

ARE (SM) DESIGN & MANAGEMENT PROFESSIONALS
CONSULTANTS
SHREVEPORT, LOUISIANA
HAMMOND, LOUISIANA

EJES INCORPORATED
201 WILKINSON STREET
SHREVEPORT, LA. 71104

JERON ROGERS LICENSED PROFESSIONAL ENGINEER 18449 STATE OF MISSISSIPPI

7-26-2018

JERON ROGERS, PE

AIP NO.	STATE PROJECT NO.		SHEET NO.	
3-28-0031-0026-2018				

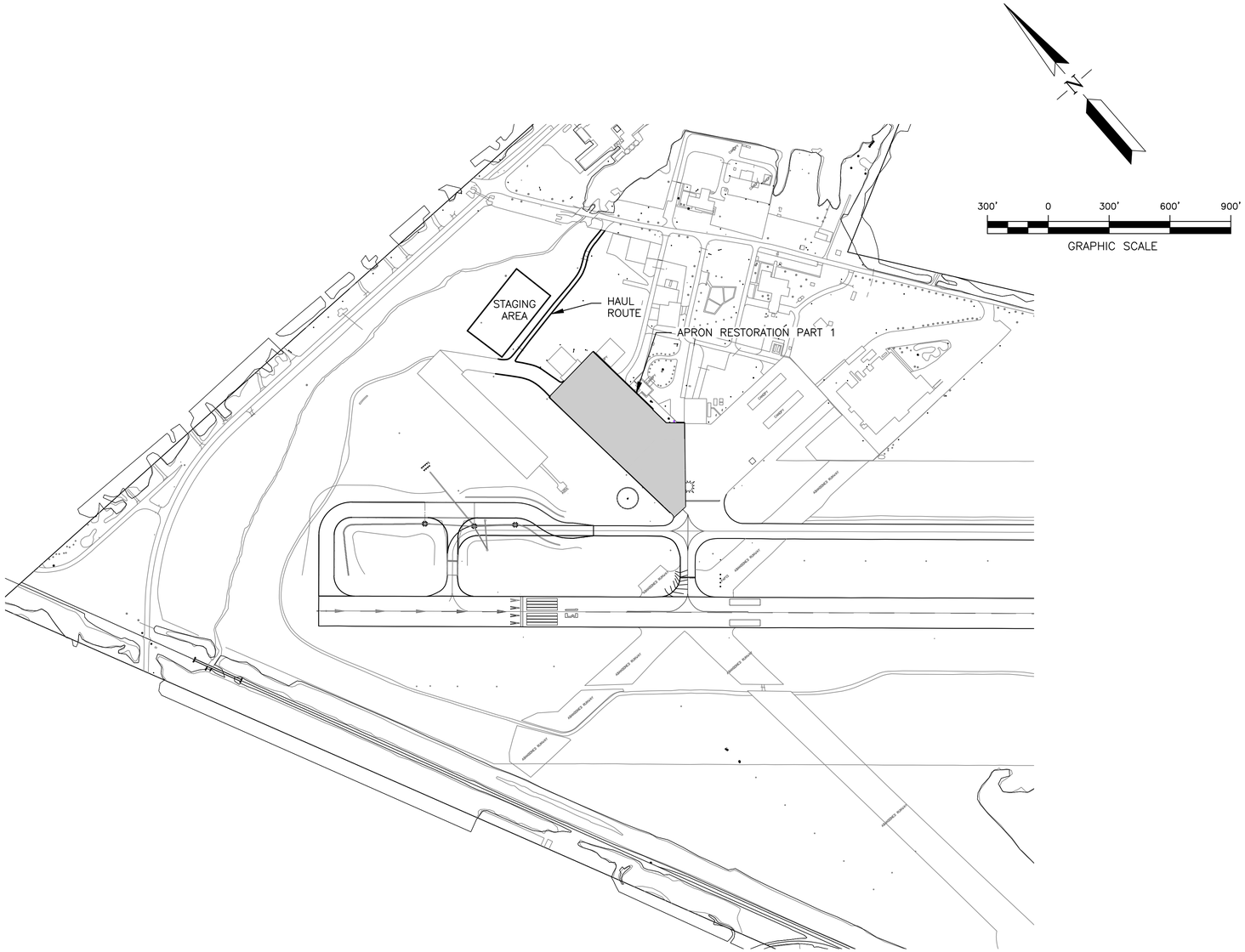

GENERAL LAYOUT PLAN

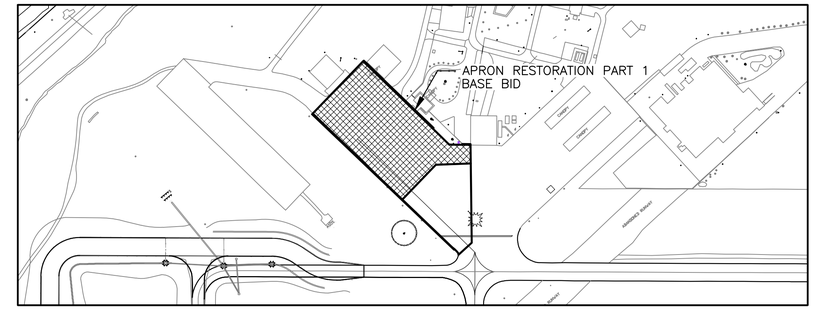

BASE BID

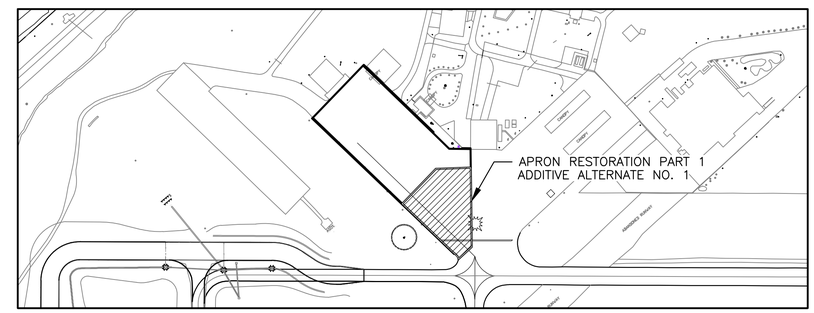

ADDITIVE ALTERNATE NO. 1

LEGEND

BASE BID

ADDITIVE ALTERNATE NO. 1

JERON ROGERS
LICENSED PROFESSIONAL ENGINEER
18449
STATE OF MISSISSIPPI

7-26-2018

NO.	REVISION	BY

GENERAL LAYOUT PLAN

APRON RESTORATION PART 1
HATTIESBURG, MISSISSIPPI

AIR REUNION CONSULTANTS

DESIGN & MANAGEMENT PROFESSIONALS

SHREVEPORT, LOUISIANA
HAMMOND, LOUISIANA

DRAWN BY	CHECKED BY	JOB NO.	SCALE	DATE	SHEET
S.M.	J.R.	18-0710	1"=300'	07/26	02

AIP NO.	STATE PROJECT NO.		SHEET NO.	
3-28-0031-0026-2018				

SUMMARY OF ESTIMATED QUANTITIES

ITEM NO.	ITEM	QUANTITY (BASE BID)	QUANTITY (ADDITIVE ALTERNATE 1)	UNIT
P-401-8.1a	BITUMINOUS SURFACE COURSE	776	538	TON
P-403-8.1a	BITUMINOUS LEVELING COURSE	920	38	TON
P-501	PORTLAND CEMENT CONCRETE PAVEMENT 6 1/2" THICK	14000	4500	S.Y.
P-603	BITUMINOUS TACK COAT	1140	488	GAL
P-620-5.1(A)	RUNWAY AND TAXIWAY PAINTING	500	2000	S.F.
D-701-5.1(E)	15" POLY (VINYL CHLORIDE) RIBBED DRAIN PIPE	589		L.F.
D-751	REBUILD INLET	1		EACH
T-901	TURFING (SEEDING, FERTILIZING, & MULCHING)	1200		S.Y.
S001	MOBILIZATION	L.S.		LUMP SUM
S003	CONSTRUCTION LAYOUT	L.S.		LUMP SUM
S008	PRE-SLOPED CHANNEL DRAIN	510		L.F.

GENERAL NOTES

1. EXISTING UNDERGROUND UTILITY LINES ARE NOT SHOWN ON THESE PLANS. IT IS THE RESPONSIBILITY OF THE CONTRACTOR TO HAVE ALL UTILITY COMPANIES FIELD LOCATE THEIR EQUIPMENT AND FACILITIES PRIOR TO CONSTRUCTION. THE CITY OF BOGALUSA AND THE ENGINEER ASSUME NO LIABILITY FOR DAMAGES TO UTILITY LINES CAUSED BY THE CONTRACTOR. CALL "LA ONE CALL" AT 1-800-272-3020 AND UTILITY COMPANY.
2. CONTRACTOR SHALL FIELD VERIFY LOCATION AND GRADE OF ALL PROPOSED IMPROVEMENTS. CONFLICTS OR DISCREPANCIES SHALL BE BROUGHT TO THE IMMEDIATE ATTENTION OF THE ENGINEER.
3. CONTRACTOR SHALL REPAIR DAMAGE TO EXISTING PAVEMENT, WALKS AND OTHER FACILITIES CAUSED BY CONSTRUCTION AT NO ADDITIONAL PAY.
4. ALL REQUIRED CONSTRUCTION SIGNS, BARRICADES, AND WORK ZONE TRAFFIC CONTROL SHALL COMPLY WITH FEDERAL AVIATION ADMINISTRATION REQUIREMENTS.
5. THE CONTRACTOR SHALL BE RESPONSIBLE FOR RESTORING ALL DISTURBED EARTH AREAS TO AN EQUAL OR BETTER CONDITION THAN THE EXISTING GROUND COVER PRIOR TO CONSTRUCTION.
6. THE CONTRACTOR IS TO IMPLEMENT BEST-MANAGEMENT PRACTICES FOR CONSTRUCTION ACTIVITIES TO CONTROL RUNOFF FROM CONSTRUCTION. CONTRACTOR SHALL SUPPLY AND INSTALL SILT FENCES, HAY BALES, CHECK DAMS, SILTING BASINS, OR A COMBINATION THEREOF, TO COMPLY WITH EPA STORM-WATER REGULATIONS AT NO ADDITIONAL PAY.
7. ALL EXCESS EXCAVATION AND DEBRIS CREATED BY CONSTRUCTION SHALL BE REMOVED FROM THE SITE AND DISPOSED OF BY THE CONTRACTOR. CONTRACTOR SHALL KEEP ALL ADJACENT PUBLIC STREETS AND DRIVEWAYS FREE OF MUD AND OTHER DEBRIS DURING CONSTRUCTION.

L E G E N D

	EXISTING	REQUIRED		EXISTING
ASPHALT OVERLAY			TELEPHONE JUNCTION BOX	
ASPHALT PAVEMENT			TELEPHONE POLE	
CONCRETE PAVEMENT			POWER POLE	
DITCH OR DRAINAGE THREAD			GUY WIRE W/ ANCHOR	
LIGHT POLE			ELECTRIC SERVICE BOX	
FINISH GRADE		FG 228.65	SPOT ELEVATION	234.23
UNDERDRAIN			C.M.P. OR R.CP.	
UNDERDRAIN JUNCTION BOX			FENCE	
CONTOUR LINE				

JERON ROGERS LICENSED PROFESSIONAL ENGINEER 18449 STATE OF MISSISSIPPI

7-26-2018

NO.	REVISION	BY

QUANTITIES AND GENERAL NOTES

APRON RESTORATION PART 1
HATTIESBURG, MISSISSIPPI

AIR REUNION CONSULTANTS

DESIGN & MANAGEMENT PROFESSIONALS

SHREVEPORT, LOUISIANA
HAMMOND, LOUISIANA

DRAWN BY	CHECKED BY	JOB NO.	SCALE	DATE	SHEET
S.M.	J.R.	18-0710		07/26	03

AIP NO.	STATE PROJECT NO.		SHEET NO.	
3-28-0031-0026-2018				

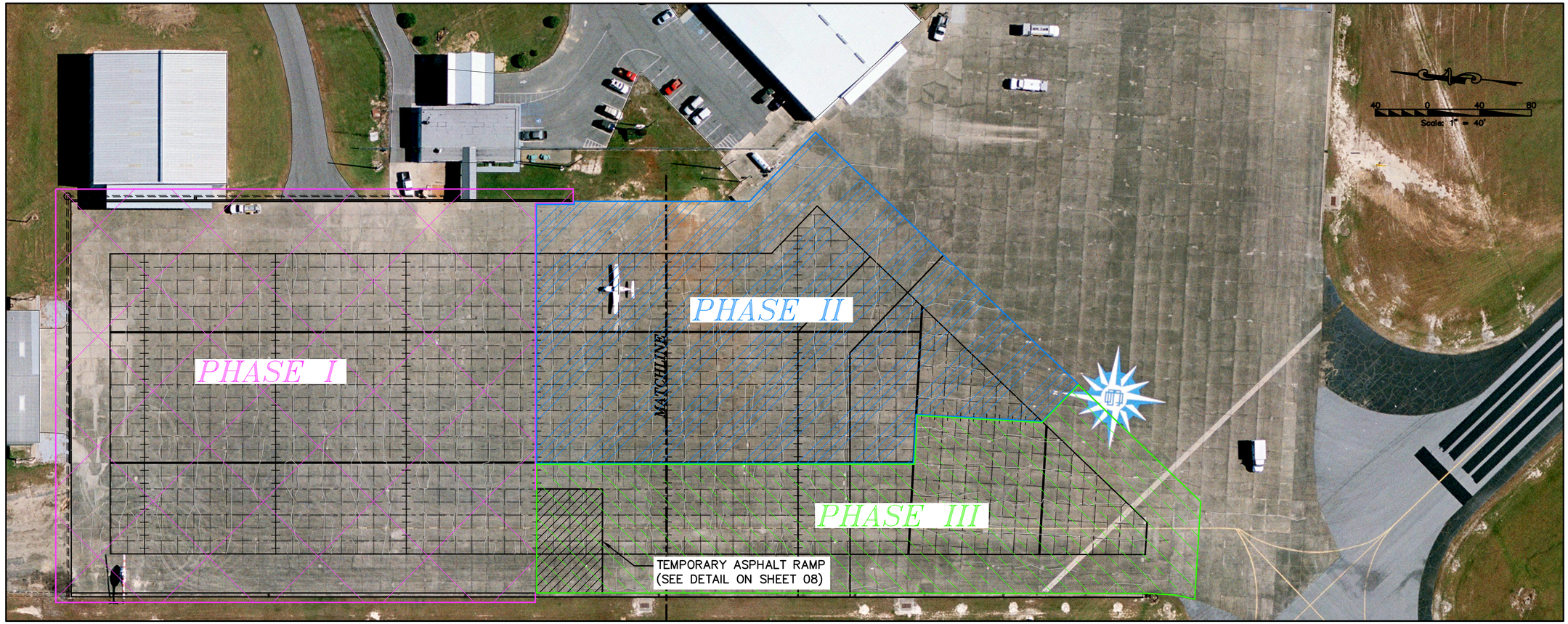

CONSTRUCTION CONTROL AND SAFETY NOTES

1. THE CONTRACTOR SHALL BECOME FAMILIAR WITH ALL REQUIREMENTS APPLICABLE TO AIRPORT CONSTRUCTION AND COOPERATE WITH THE ENGINEER IN MAINTAINING A SAFE CONSTRUCTION SITE.
2. IT IS A GENERAL REQUIREMENT OF THIS PROJECT THAT THE CONTRACTOR BECOME FAMILIAR WITH ALL SECURITY ASPECTS AND RECOGNIZES THAT FROM TIME-TO-TIME THE OWNER MAY REVISE OR MODIFY THIS PROGRAM TO ENSURE SAFETY OR TO MEET FEDERAL REGULATIONS.
3. WHERE SECURITY GATES ARE TO BE INSTALLED OR USED PRIMARILY BY THE CONTRACTOR, SPECIFIC GUIDELINES MUST BE FOLLOWED.
4. THE CONTRACTOR WILL STRICTLY CONFINE THE ACTIVITIES OF ALL PERSONNEL AND EQUIPMENT TO THE WORK AREAS INDICATED FOR THIS CONTRACT.
5. THE SAFETY OF THE PROJECT IS THE ULTIMATE RESPONSIBILITY OF THE CONTRACTOR AND THIS KNOWLEDGE MUST BE DEMONSTRATED BY SUBMITTING A SCHEDULE AND DETAILED SAFETY PLAN USING THIS DOCUMENT AS A MINIMUM GUIDELINE FOR APPROVAL BY THE CONSULTING ENGINEER BEFORE CONSTRUCTION.
6. THE FIELD ENGINEER RESERVES THE RIGHT TO MODIFY THESE SAFETY GUIDELINES AS DEEMED NECESSARY TO HOLD AIRPORT/AIRCRAFT SAFETY AND QUALITY CONTROL TO THE HIGHEST STANDARD.
7. THE CONTRACTOR SHALL PAY PARTICULAR ATTENTION TO THE DUST AND SMOKE CONTROL REQUIREMENTS OF THIS CONTRACT. THE OPERATIONS OF RUNWAYS, TAXIWAYS, AND ASSOCIATED NAVAIDS ARE ESPECIALLY SENSITIVE TO DUST AND SMOKE. THE ENGINEER RESERVES THE RIGHT TO STOP GRADING, HAULING, OR OTHER WORK IF NECESSARY TO BRING UNDER CONTROL THE DUST OR SMOKE SITUATION. THE CONTRACTOR SHALL BE RESPONSIBLE FOR DUST AND SMOKE CONTROL WITHIN THE CONSTRUCTION LIMITS AS WELL AS ALONG ANY ROADWAYS USED BY EQUIPMENT AND VEHICLES. FAILURE TO CONTROL DUST AND SMOKE MAY RESULT IN PROJECT SUSPENSION.
8. ALL TRAFFIC WILL BE STRICTLY DIRECTED TO NOT TRAVEL ON ANY ADJACENT RUNWAY OR TAXIWAY PAVEMENT.
9. THE CONTRACTOR SHALL FULLY MOBILIZE A SUFFICIENT NUMBER OF WATER TRUCKS ON SITE. THESE WATER TRUCKS WILL BE USED CONTINUOUSLY FOR DUST CONTROL, AS ASSOCIATED NAVAIDS ARE ESPECIALLY SENSITIVE TO DUST; ALL WATERING WILL BE DIRECTED BY THE CONTRACTOR AND OVERSEEN BY THE FIELD ENGINEER.
10. THE MOISTURE CONTENT OF THE EMBANKMENT IN PLACE WILL REQUIRE CONTINUOUS MODIFICATION FOR OBTAINING THE REQUIRED DENSITY AND ALSO FOR DUST CONTROL.
11. THE CONTRACTOR IS RESPONSIBLE FOR SECURING THE AIRPORT AT NIGHT AND ENSURING BARRICADES ARE IN PLACE AND LIGHTS ARE FUNCTIONING.
12. ALL SYSTEMS TESTING MUST BE SUPERVISED OR APPROVED BY THE FIELD ENGINEER AND/OR A REPRESENTATIVE OF THE LOUISIANA DEPARTMENT OF AVIATION.
13. THE LOCATION AND SIZE OF THE CONTRACTOR'S STAGING AREAS IS SHOWN FOR REFERENCE ONLY. THE ACTUAL SIZE AND EXACT LOCATION WILL BE ESTABLISHED PRIOR TO CONSTRUCTION. THE FOLLOWING REQUIREMENTS WILL APPLY, HOWEVER:
    A. ALL OF THE CONTRACTOR'S ACTIVITY WILL BE STAGED FROM THIS AREA. ALL FIELD OFFICE AND EMPLOYEE PARKING WILL BE WITHIN THE STAGING AREA OUTSIDE THE AIRPORT SECURITY AS SHOWN.
    B. FENCING AROUND THE PROPOSED STAGING AREA IS SUGGESTED BUT NOT MANDATORY. SUCH FENCING SHALL BE CONSIDERED TEMPORARY AND WILL NOT BE MEASURED FOR PAVEMENT.
    C. THE CONTRACTOR MAY DO SOME GRADING AND DRAINAGE WORK TO ADAPT THE AREA TO SPECIFIC NEEDS. UPON COMPLETION OF THE WORK, HOWEVER, THE AREA WILL BE DRESSED, SEEDED, AND RESTORED TO ITS CONDITION PRIOR TO CONSTRUCTION ACTIVITIES.
    D. THE CONTRACTOR SHALL SUBMIT A DETAILED PLAN LAYOUT OF THE STAGING AREA TO THE ENGINEER FOR REVIEW AND APPROVAL.
    E. THE CONTRACTOR SHALL PROVIDE SIGNS, FABRICATED IN A COMMERCIAL SIGN SHOP, INDICATING THE NAME OF THE CONTRACTOR AND A MESSAGE DIRECTING ALL MATERIAL DELIVERIES TO THE STAGING AREA. THESE SIGNS SHALL BE LOCATED AT THE ENTRANCE TO THE STAGING AREA OFF THE PUBLIC ROADWAY. THE COST OF FABRICATING AND ERECTION OF THESE SIGNS SHALL BE INCLUDED IN OTHER ITEMS.
14. PER THE FAA, PROVIDE AT LEAST 48 HOURS NOTICE TO THE AIRPORT MANAGER WHEN THERE IS A NEEDED NOTAM (NOTICE TO AIRMEN).
15. PHASE I MUST BE COMPLETED WITHIN 42 DAYS OF THE NTP (NOTICE TO PROCEED).

CONSTRUCTION SEQUENCE

Phase I

1. ESTABLISH CONTRACTOR STAGING AREA AND MOBILIZE ALL CONSTRUCTION EQUIPMENT.
2. CLEAR AND GRUB DRAINAGE DITCH, INSTALL 15" PIPE AND PRE-SLOPED CHANNEL DRAIN.
3. PAVE THE FIRST 358.4' FT OF THE APRON AS SHOWN IN THE PLAN ABOVE.
4. PAVE A TEMPORARY ASPHALT RAMP 80FT WIDE, 40FT LONG AT THE SOUTHWEST CORNER OF NEW CONSTRUCTION FOR AIRCRAFT TO USE DURING PHASE II OF CONSTRUCTION (SEE DETAIL ON SHEET 08).

Phase II

1. PAVE REMAINDER OF APRON, WITH THE EXCEPTION OF A 100FT LANE ALONG THE WEST EDGE FOR AIRCRAFT TO USE DURING THIS PHASE OF CONSTRUCTION, AND ANYWHERE NOT FEASIBLE TO BEGIN (SEE PLAN).

Phase III

1. REMOVE TEMPORARY ASPHALT RAMP AND PAVE ALL REMAINING AREAS OF THE APRON THAT WERE EXCLUDED IN PHASE II. REBUILD INLET.
2. UPON ACCEPTANCE OF EARTHWORK AND DRAINAGE, SEED AND FERTILIZE ALL DISTURBED AREA WITHIN WORKING AREA.
3. CHECK ALL PERMANENT EROSION CONTROL STRUCTURES AND REPAIR IF NECESSARY.
4. REMOVE ALL EQUIPMENT AND CONTRACTOR STAGING AREA.

SEEDING, FERTILIZING & MULCHING NOTES:

1. STORAGE, HANDLING, TRANSPORTATION AND DISTRIBUTION WILL BE AS DIRECTED BY FIELD ENGINEER.
2. NO STRAW OR HAY SHALL BE ALLOWED TO BLOW AWAY FROM THE WORK AREAS OR ONTO THE RUNWAY.
3. ANY TAR, MULCH, OR SEED THAT COVERS ANY ELECTRICAL ITEM OR OTHER EQUIPMENT WILL BE REMOVED THAT SAME DAY.
4. ALL AIRPORT EQUIPMENT SHALL BE CLEANED OF ANY TURFING MATERIAL THE SAME DAY AS DIRECTED BY FIELD ENGINEER.

JOINT LEGEND

- LONGITUDINAL EXPANSION JOINT (TYPE A-1)
- LONGITUDINAL CONSTRUCTION JOINT (TYPE E OR F)
- TRANSVERSE EXPANSION JOINT (TYPE A-2)
- CONTRACTION JOINT (TYPE D)

JERON ROGERS LICENSED PROFESSIONAL ENGINEER 18449 STATE OF MISSISSIPPI

7-26-2018

NO.	REVISION	BY

SEQUENCE OF CONSTRUCTION

APRON RESTORATION PART 1
HATTIESBURG, MISSISSIPPI

ARE AIR REUNION CONSULTANTS

DESIGN & MANAGEMENT PROFESSIONALS

SHREVEPORT, LOUISIANA
HAMMOND, LOUISIANA

DRAWN BY	CHECKED BY	JOB NO.	SCALE	DATE	SHEET
S.M.	J.R.	18-0710	1"=40'	07/26	04

AIP NO.	STATE PROJECT NO.		SHEET NO.	
3-28-0031-0026-2018				

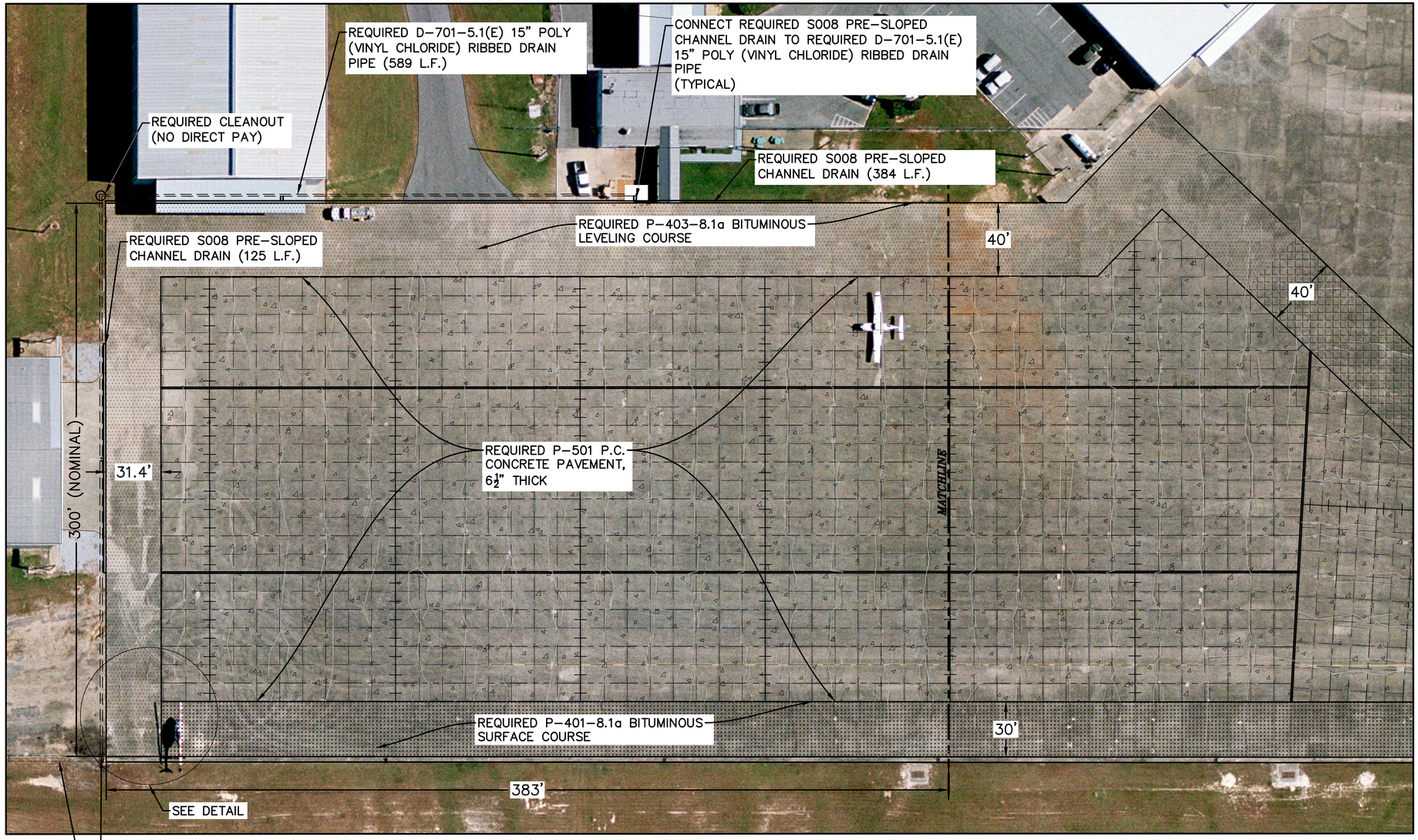

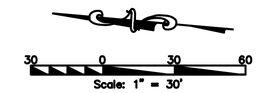

NOTES

1. JOINTS IN REQUIRED P-501 P.C. CONCRETE PAVEMENT ARE LOCATED OVER EXISTING JOINTS. THE REQUIRED P.C. CONCRETE OVERLAY ADDS AN INTERMEDIATE JOINT WHERE EXISTING JOINTS ARE 25 FT APART (SEE DETAIL).
2. EXISTING P.C. CONCRETE APRON MUST BE THOROUGHLY CLEANED. REMOVE ANY LOOSE MATERIAL, SPALLED MATERIAL, ETC.
3. OUTER LONGITUDINAL JOINTS REQUIRE #5 BARS AT 30 INCHES LONG, SPACED AT 30 INCHES ON CENTER TO TIE THE OUTSIDE PANELS.

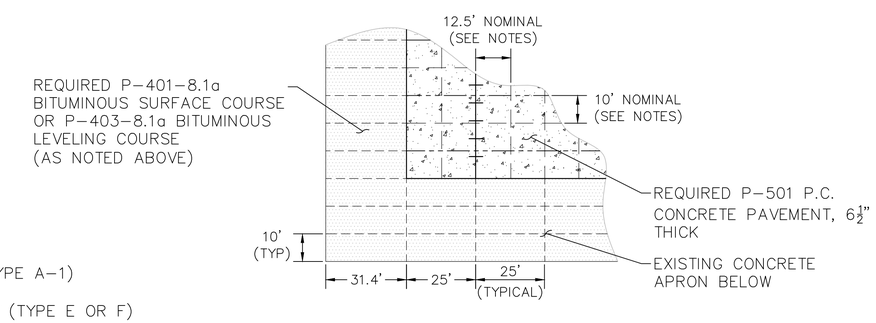

TYPICAL JOINT SPACING
N.T.S.
(SEE NOTES)

JOINT LEGEND

- LONGITUDINAL EXPANSION JOINT (TYPE A-1)
- LONGITUDINAL CONSTRUCTION JOINT (TYPE E OR F)
- TRANSVERSE EXPANSION JOINT (TYPE A-2)
- CONTRACTION JOINT (TYPE D)

NO.	REVISION	BY

PAVING AND DRAINAGE PLAN

APRON RESTORATION PART 1
HATTIESBURG, MISSISSIPPI

AIR REUNION CONSULTANTS
DESIGN & MANAGEMENT PROFESSIONALS
SHREVEPORT, LOUISIANA
HAMMOND, LOUISIANA

DRAWN BY	CHECKED BY	JOB NO.	SCALE	DATE	SHEET
S.M.	J.R.	18-0710	1"=30'	07/26	05

AIP NO.	STATE PROJECT NO.		SHEET NO.	
3-28-0031-0026-2018				

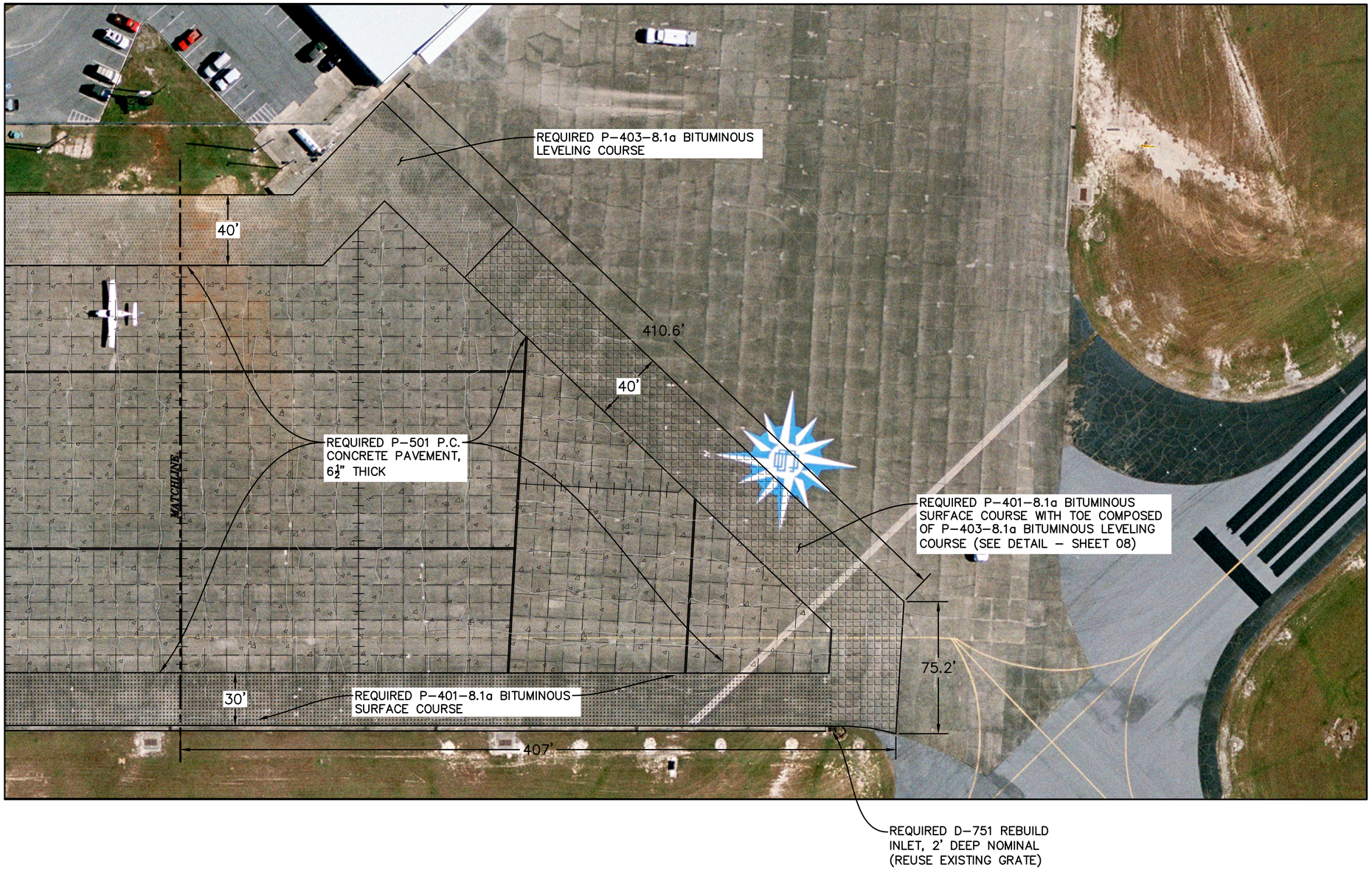

30 0 30 60
Scale: 1" = 30'

JERON ROGERS LICENSED PROFESSIONAL ENGINEER 18449 STATE OF MISSISSIPPI
7-26-2018

JOINT LEGEND

- LONGITUDINAL EXPANSION JOINT (TYPE A-1)
- LONGITUDINAL CONSTRUCTION JOINT (TYPE E OR F)
- TRANSVERSE EXPANSION JOINT (TYPE A-2)
- CONTRACTION JOINT (TYPE D)

NO.	REVISION	BY

PAVING PLAN

APRON RESTORATION PART 1
HATTIESBURG, MISSISSIPPI

ARE AIR REUNION CONSULTANTS
DESIGN & MANAGEMENT PROFESSIONALS
SHREVEPORT, LOUISIANA
HAMMOND, LOUISIANA

DRAWN BY	CHECKED BY	JOB NO.	SCALE	DATE	SHEET
S.M.	J.R.	18-0710	1"=30'	07/26	06

AIP NO.	STATE PROJECT NO.		SHEET NO.	
3-28-0031-0026-2018				

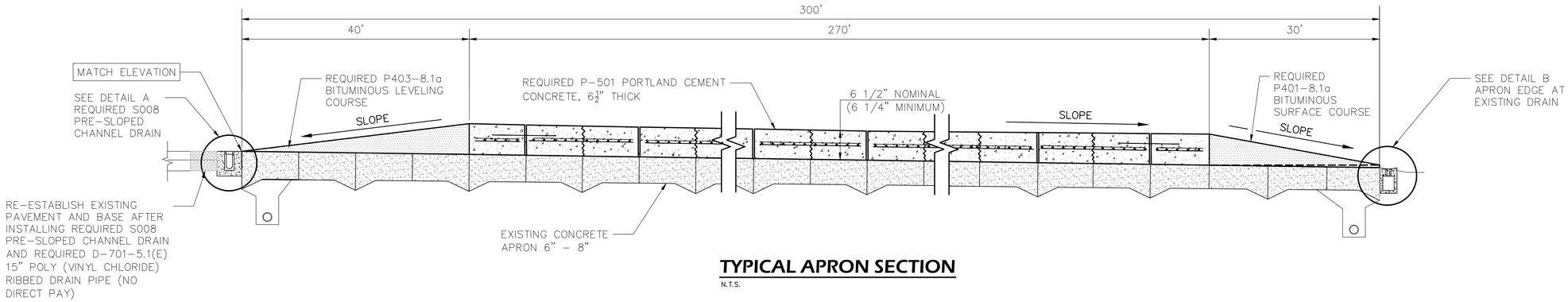

TYPICAL APRON SECTION

N.T.S.

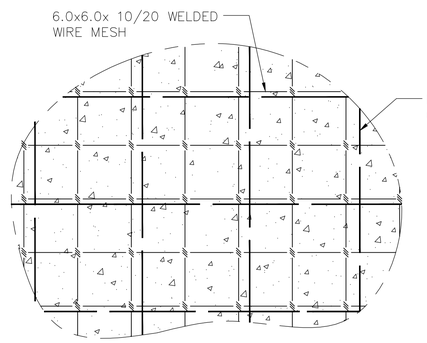

INTERIOR

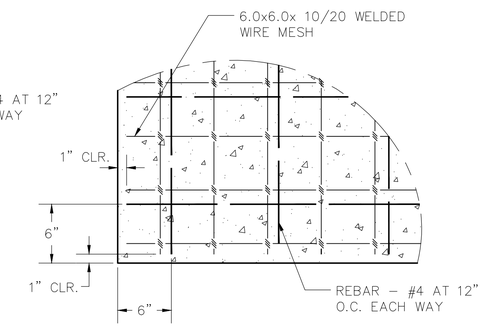

AT EDGES

PLAN VIEWS

N.T.S.

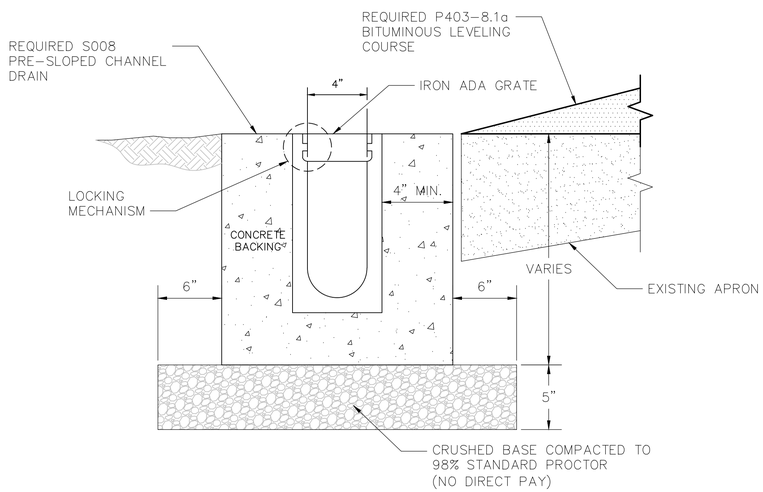

DETAIL A - PRE-SLOPED CHANNEL DRAIN

N.T.S.

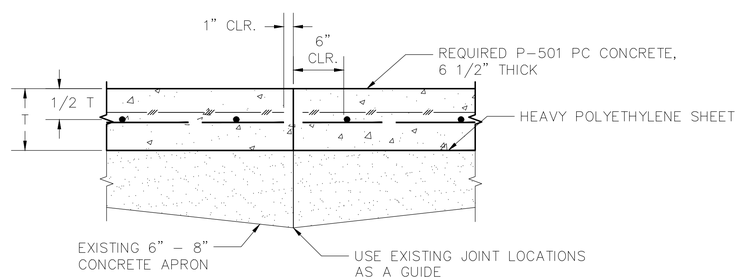

TYPICAL REINFORCING PLAN

N.T.S.

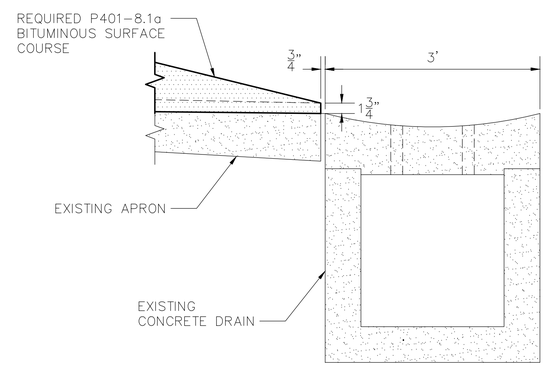

DETAIL B - APRON AT EXISTING CONCRETE DRAIN

N.T.S.

JERON ROGERS
LICENSED PROFESSIONAL ENGINEER
18449
STATE OF MISSISSIPPI

7-26-2018

NO.	REVISION	BY

TYPICAL SECTIONS AND DETAILS

APRON RESTORATION PART 1
HATTIESBURG, MISSISSIPPI

AIR REUNION CONSULTANTS

DESIGN & MANAGEMENT PROFESSIONALS

SHREVEPORT, LOUISIANA
HAMMOND, LOUISIANA

DRAWN BY	CHECKED BY	JOB NO.	SCALE	DATE	SHEET
S.M.	J.R.	18-0710	AS NOTED	07/26	07

AIP NO.	STATE PROJECT NO.		SHEET NO.	
3-28-0031-0026-2018				

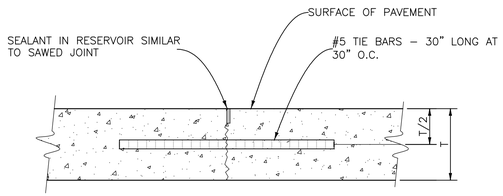

TYPE B HINGED
N.T.S.

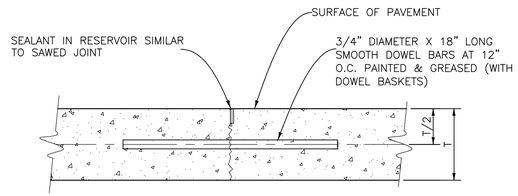

TYPE C DOWELED
N.T.S.

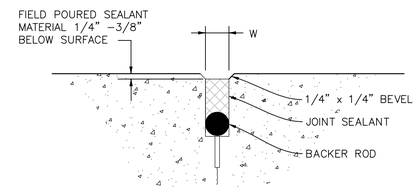

CONTRACTION JOINTS

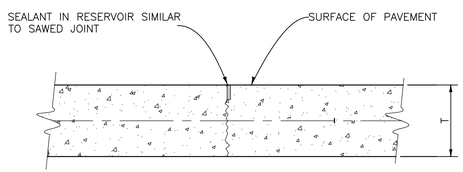

TYPE D DUMMY
N.T.S.

CONTRACTION JOINTS

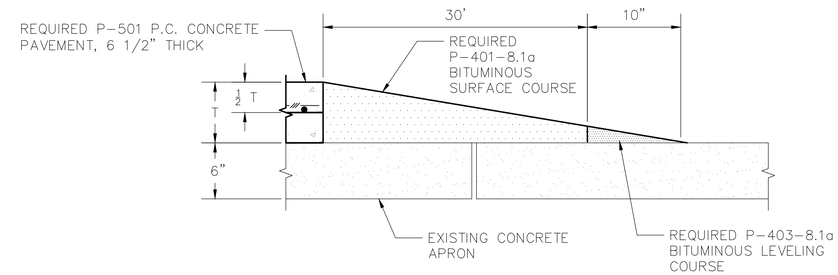

COMPOSITE ASPHALT WEDGE DETAIL

N.T.S.
(SEE SHEET 06 FOR LOCATION)

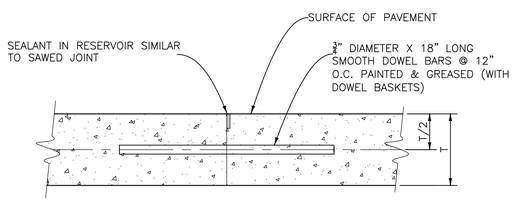

TYPE E DOWELED
N.T.S.
(FOR USE DURING AN INTERRUPTED POUR)

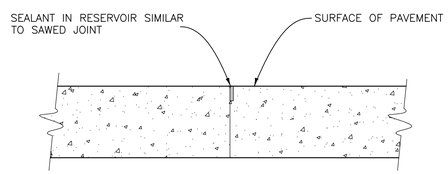

TYPE F BUTT
N.T.S.

CONSTRUCTION JOINTS

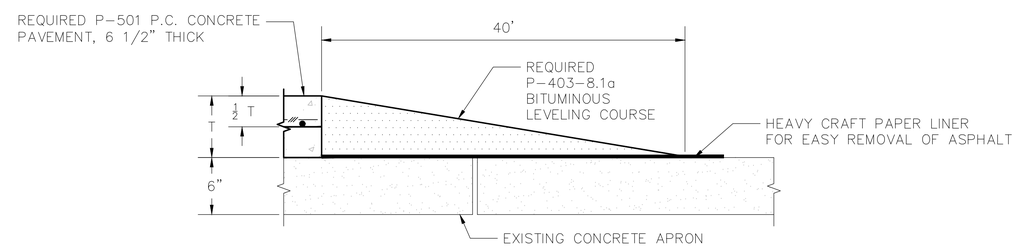

TEMPORARY ASPHALT RAMP (80' LONG)

N.T.S.
(SEE SHEET 04 FOR LOCATION & DETAILS)

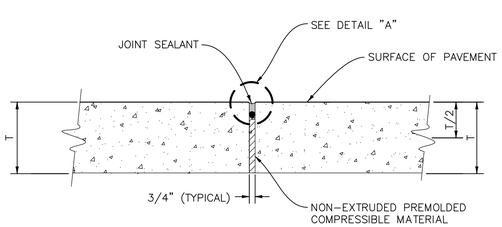

TYPE A-1 LONGITUDINAL EXPANSION JOINT
N.T.S.

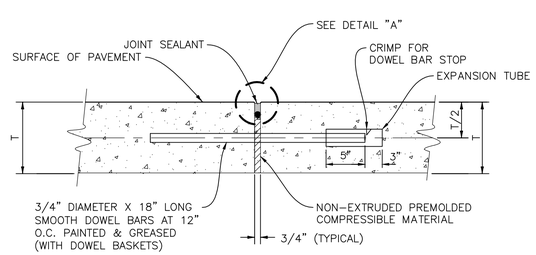

TYPE A-2 TRANSVERSE EXPANSION JOINT
N.T.S.

EXPANSION JOINTS

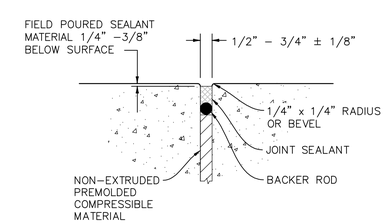

DETAIL "A"
N.T.S.

NO.	REVISION	BY

JOINT DETAILS AND MISCELLANEOUS DETAILS

APRON RESTORATION PART 1
HATTIESBURG, MISSISSIPPI

AIR REUNION CONSULTANTS
DESIGN & MANAGEMENT PROFESSIONALS
SHREVEPORT, LOUISIANA
HAMMOND, LOUISIANA

DRAWN BY	CHECKED BY	JOB NO.	SCALE	DATE	SHEET
S.M.	J.R.	18-0710	AS NOTED	07/26	08

AIP NO.	STATE PROJECT NO.		SHEET NO.	
3-28-0031-0026-2018				

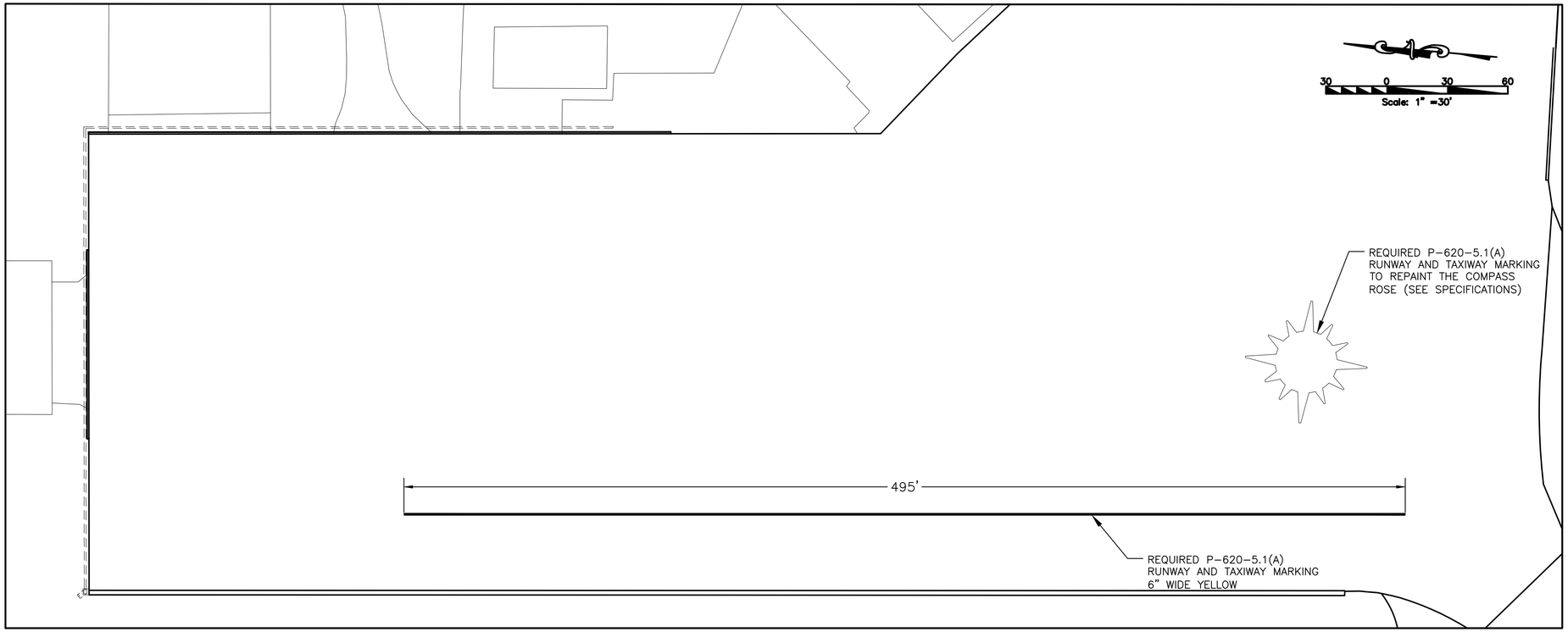

GENERAL PAVEMENT MARKING PLAN

JERON ROGERS
LICENSED PROFESSIONAL ENGINEER
18449
STATE OF MISSISSIPPI

7-26-2018

PAVEMENT MARKING AND DETAILS

APRON RESTORATION PART 1
HATTIESBURG, MISSISSIPPI

AIR REUNION CONSULTANTS

DESIGN & MANAGEMENT PROFESSIONALS

SHREVEPORT, LOUISIANA
HAMMOND, LOUISIANA

NO.	REVISION	BY

DRAWN BY	CHECKED BY	JOB NO.	SCALE	DATE	SHEET
S.M.	J.R.	18-0710	1"=30'	07/26	09

STATE	PROJECT NO.
MISS.	

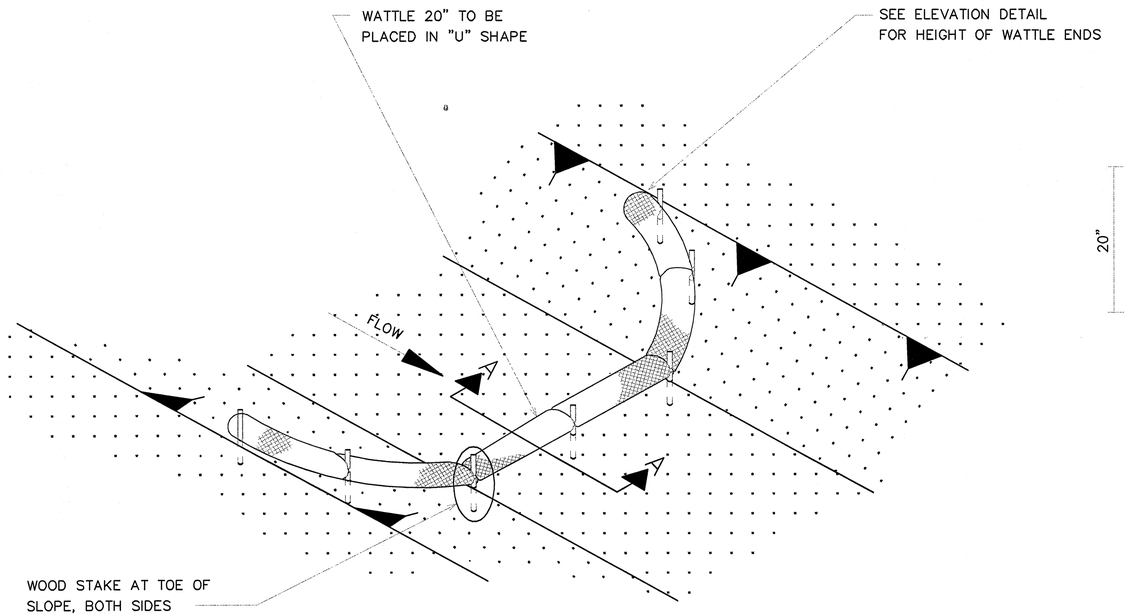

DETAIL (DITCH CHECK)

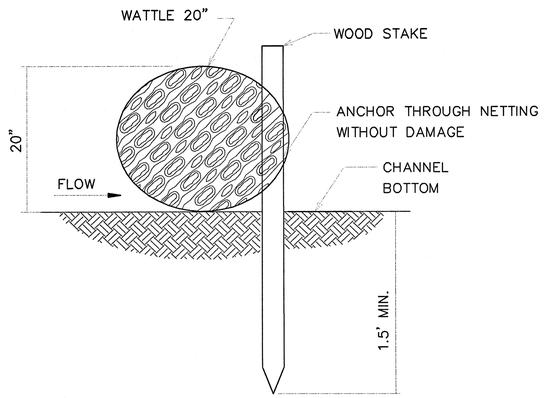

SECTION A–A

NOTES:

1. MINIMUM RECOMMENDED PLACEMENT INTERVAL BETWEEN WATTLE DITCH CHECK IS 100' UNLESS SHOWN OTHERWISE ON THE PLANS OR EROSION CONTROL PLAN APPROVED BY THE ENGINEER. SEE SPACING GUIDANCE ON ECD–4
2. ANCHORING WOOD STAKES SHALL BE SIZED, SPACED, DRIVEN, AND BE OF A MATERIAL THAT EFFECTIVELY SECURES THE CHECK. STAKE SPACING SHALL BE A MAXIMUM OF THREE FEET. ALL NON–DEGRADABLE MATERIALS SHALL BE REMOVED WHEN NO LONGER NEEDED.
3. TRENCHING OF WATTLES MAY BE NECESSARY IF PIPING BECOMES EVIDENT.
4. WATTLES SHOULD NOT BE USED IN HARD BOTTOM CHANNELS.

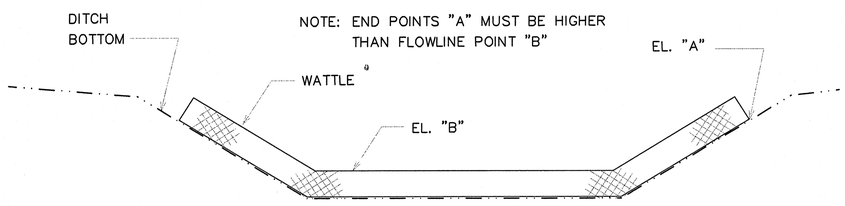

ELEVATION DETAIL

WATTLE DITCH CHECK SELECTION GUIDELINES

WATTLE DITCH CHECKS ARE APPROPRIATE FOR VELOCITY REDUCTION AND CONTROL OF SEDIMENT TRANSPORT UNDER LOW TO MEDIUM FLOW CONDITIONS.

DATE	REVISION	BY

MISSISSIPPI DEPARTMENT OF TRANSPORTATION

DETAILS OF EROSION CONTROL
WATTLE DITCH CHECK

WORKING NUMBER

FILENAME: EROSION CONTROL\ECD–6.DGN

SHEET NUMBER

DESIGN TEAM _____ CHECKED _____ DATE _____

SPECIFICATIONS AND CONTRACT DOCUMENTS

HATTIESBURG-BOBBY L. CHAIN MUNICIPAL AIRPORT
APRON RESTORATION
PART I

AIP NO. 3-28-0031-0026-2018

CITY OF HATTIESBURG

Prepared By

ARE Consultants, Inc.

800 Spring Street, Suite 214, Shreveport, LA 71101
P.O. Box 38252, (318) 222-8252
1216 S. Morrison, STE 5, Hammond, LA 70403

July, 2018

JERON ROGERS
LICENSED PROFESSIONAL ENGINEER
18449
STATE OF MISSISSIPPI

7-26-2018

TABLE OF CONTENTS

CONTRACT DOCUMENTS.....1

SECTION A: ADVERTISEMENT TO BIDDERS.....1

SECTION B: INSTRUCTIONS FOR BIDDERS.....3

SECTION C: MANDATORY CONTRACT PROVISIONS.....7
- SPECIAL INSTRUCTION TO BIDDERS REGARDING EEO.....7
- SPECIAL NOTICE TO BIDDERS.....9
- INSTRUCTIONS REGARDING CONTRACTOR'S INSURANCE.....10
- REQUIRED LANGUAGE IN PROPOSALS FOR AIP CONTRACT.....11
- CERTIFICATION REGARDING DEBARMENT, SUSPENSION, INELIGIBILITY AND VOLUNTARY EXCLUSION.....12
- CERTIFICATION REGARDING FOREIGN TRADE RESTRICTIONS.....13
- BUY AMERICAN CERTIFICATION.....14
- CERTIFICATION OF BIDDER REGARDING EQUAL EMPLOYMENT OPPORTUNITY.....15
- CERTIFICATION OF NONSEGREGATED FACILITIES.....16
- WAGE, LABOR, EEO, SAFETY AND GENERAL REQUIREMENTS.....17
  - Part A: FEDERAL AVIATION ADMINISTRATION REQUIREMENTS.....17
  - Part B: DAVIS-BACON ACT REQUIREMENTS.....19
  - Part C: CONTRACT WORK HOURS AND SAFETY STANDARDS ACT REQUIREMENTS.....26
  - Part D: EQUAL EMPLOYMENT OPPORTUNITY.....28
  - Part E: CLEAN AIR AND WATER POLLUTION CONTROL REQUIREMENTS.....30
  - Part F: STANDARD FEDERAL EQUAL EMPLOYMENT OPPORTUNITY CONSTRUCTION.....31
  - Part G: CONTRACTUAL REQUIREMENTS.....36
  - Part H: TERMINATION OF CONTRACT.....37
  - Part I: BUY AMERICAN.....38
- DISADVANTAGED BUSINESS ENTERPRISE CONTRACT PROVISIONS.....39
- BIDDERS INSTRUCTIONS AND CHECKLIST.....41

SECTION D: BID INFORMATION
- BID FORM.....42
- BID BOND.....48
- AFFIDAVIT.....50
- CERTIFICATION REGARDING DEBARMENT, SUSPENSION, INELIGIBILITY, AND VOLUNTARY EXCLUSION.....51
- ELIGIBILITY QUESTIONNAIRE.....52
- ACKNOWLEDGMENT OF CONTINUING OBLIGATION TO INFORM.....55

SECTION E: CONTRACT.....56

SECTION F: PERFORMANCE AND PAYMENT BOND.....59

SECTION G: CERTIFICATE AND RELEASE.....63

SECTION H: SPECIAL PROVISIONS.....65

SECTION I: ADDITIONAL INSURANCE PREMIUM.....I-3.2

ENGINEERING AND DESIGN SPECIFICATIONS 73

PART I: GENERAL PROVISIONS.....74
SECTION 10: DEFINITION OF TERMS.....74
MODIFICATIONS TO SECTION 20.....79
SECTION 20: REQUIREMENTS AND CONDITIONS.....80
SECTION 30: AWARD AND EXECUTION OF CONTRACT.....84
SECTION 40: SCOPE OF WORK.....86
SECTION 50: CONTROL OF WORK 90
SECTION 60: CONTROL OF MATERIALS 96
SECTION 70: LEGAL REGULATIONS AND RESPONSIBILITY TO PUBLIC.....99
SECTION 80: PROSECUTION AND PROGRESS.....107
SECTION 90: MEASUREMENT AND PAYMENT.....114
SECTION 100: CONTRACTOR QUALITY CONTROL PROGRAM.....121

DESIGN SPECIFICATIONS.....129

PART II: EARTHWORK
Not Used

PART III: FLEXIBLE BASE COURSES
Not Used

PART IV: RIGID BASE COURSES
Not Used

PART V: FLEXIBLE SURFACE COURSES
ITEM P-401: PLANT MIXED BITUMINOUS PAVEMENTS . . . P-401-1
ITEM P-403: PLANT MIXED BITUMINOUS PAVEMENTS
(LEVELING COURSE). P-403-1

PART VI: RIGID PAVEMENT
ITEM P-501 . . . . . P-501-1

PART VII: MISCELLANEOUS
ITEM P-603: BITUMINOUS TACK COAT P-603-1
ITEM P-610: STRUCTURAL PORTLAND CEMENT CONCRETE . . P-610-1
ITEM P-620: MODIFICATIONS TO RUNWAY AND TAXIWAY MARKING . P-620-M
ITEM P-620: RUNWAY AND TAXIWAY MARKING P-620-1
INSERT: COMPASS ROSE

PART VIII: FENCING
Not Used

PART IX: DRAINAGE
ITEM D-701: PIPE FOR STORM DRAINS AND CULVERTS . . . D-701-1
ITEM D-751: MODIFICATIONS TO MANHOLES, CATCH

BASINS, INLETS AND INSPECTION HOLES D-751-M

ITEM D-751: MANHOLES, CATCH BASINS, INLETS AND INSPECTION HOLES D-751-1

PART X: TURFING
ITEM T-901: MODIFICATIONS TO SEEDING T-901-M
ITEM T-901: SEEDING T-901-1

PART XI: LIGHTING INSTALLATION
Not Used

SPECIAL SECTIONS
S001: MOBILIZATION S001-1
S003: CONSTRUCTION LAYOUT S003-1
S008: PRE-SLOPED CHANNEL DRAIN. S008-1

END OF TABLE OF CONTENTS

CONTRACT DOCUMENTS

SECTION A: ADVERTISEMENT FOR BIDDERS

Proof of Publication Required.

SEALED BIDS for construction of the following will be received by the City of Hattiesburg in the City Clerks Office, City Hall, Hattiesburg, MS 39401 until 10:00 a.m. Central Time on September 7, 2018 for Hattiesburg-Bobby L. Chain Apron Restoration Part I (A.I.P. Project No. 3-28-0031-0026-2018) for the City of Hattiesburg.

This project shall generally consist of work which includes: earthwork, base, paving, marking and turfing.

Each bid shall generally be accompanied by a bid bond, certified check or cashier's check for an amount equal to five (5) percent of the total base bid.

Bids will be publicly opened and read aloud. Any bid received after closing time will be returned unopened.

Copies of the Contract Documents are on file at the City Engineering Office, 212 West Front Street, Hattiesburg, MS 39401 and are open for public inspection.

Contract documents may be examined and secured by licensed contractors, sub-contractors, and material suppliers from ARE Consultants, Inc. at (318)222-8252. Plans are available upon deposit of One Hundred Dollars ($100.00) per set for each set obtained. Direct questions to the Engineer at (318) 222-8252. The deposit will be refunded upon return of the drawings and specifications in good condition within ten (10) days after date of opening of bids.

Official bid documents may be downloaded from Central Bidding at www.centralbidding.com . Electronic bids may be submitted at www.centralbidding.com.

Evidence that a Contractor holds a valid Mississippi Contractor's License must be presented prior to release of bidding documents and/or submittal of a bid proposal. The required classification is Highway, Street, and Bridge Construction.

It is the policy of the Department of Transportation (DOT) that disadvantaged business enterprises as defined in 49 CFR Part 23 shall have the maximum opportunity to participate in the performance of contracts financed in whole or part with Federal funds.

The proposed contract is subject to the Buy American provision under Section 9129 of the Aviation Safety and Capacity Expansion Act of 1990. Details of such requirements are contained in the specifications.

The following question will be asked of all bidders: "Has the bidder defaulted on a contract or ever been involved in litigation with a political subdivision of the State of Mississippi or any other state or country?" _____ YES _____NO If "YES," please supply full details.

The City of Hattiesburg reserves the right to reject any or all bids and to waive informalities.

The bids shall be presented in a sealed envelope marked:

Bobby L. Chain Airport
Apron Restoration Part I
A.I.P Project No. 3-28-0031-0026-2018
for the City of Hattiesburg.

BID DATE: September 7, 2018 10:00 a.m. Central Time

A mandatory pre-bid conference is scheduled for 10:00 a.m. Tuesday, August 28, 2018, in the Airport Conference Room, 29 Academy Drive, Hattiesburg Bobby L. Chain Airport, Hattiesburg, MS.

By: City Clerk
City of Hattiesburg

Dates of Publication:

The Post
Thursday, August 9, 2018
Thursday, August 16, 2018

Clarion Ledger
Thursday, August 9, 2018
Thursday, August 16, 2018

SECTION B: INSTRUCTIONS FOR BIDDERS

1. DEFINED TERMS

Terms used in these Instructions to Bidders which are defined in the General Provisions of the Construction Specifications have the meanings assigned to them in the General Provisions.

2. QUALIFICATIONS OF BIDDERS

To demonstrate his qualifications for the Project, each Bidder must be prepared to submit within five days of Owner's request written evidence of the types set forth in the Special Provisions or General Provisions, such as financial data, previous experience and evidence of authority to conduct business in the jurisdiction where the Project is located.

3. EXAMINATION OF CONTRACT DOCUMENTS AND SITE

3.1 Before submitting his Bid, each Bidder must (a) examine the Contract Documents thoroughly, (b) visit the site to familiarize himself with local conditions that may in any manner affect performance of the Work, (c) familiarize himself with Federal, state, and local laws, ordinances, rules and regulations affecting performance of the Work; and (d) carefully correlate his observations with the requirements of the Contract Documents.

3.2 Reference is made to the General Provisions of the Specifications for the identification of those surveys and investigation reports of subsurface or latent physical conditions at the site or otherwise affecting performance of the Work which have been relied upon by Engineer in preparing the Drawings and Specifications. Owner will make copies of such surveys and reports available to any Bidder requesting them. Before submitting his bid, each Bidder will, at his own expense, make such additional surveys and investigations as he may deem necessary to determine his Bid price for performance of the Work within the terms of the Contract Documents.

3.3 The submission of a Bid will constitute an incontrovertible representation by the Bidder that he has compiled with every requirement of this Article 3.

4. INTERPRETATIONS

All questions about the meaning or intent of the Contract Documents shall be submitted to Engineer in writing. Replies will be issued by Addenda mailed or delivered to all parties recorded by Engineer as having received the bidding documents. Questions received less than five days prior to the date for opening of Bids will not be answered. Only questions answered by formal written Addenda will be binding. Oral and other interpretations or clarifications will be without legal effect.

5. BID SECURITY

The amount and type of Bid Security is stated in the Advertisement of Bids. The required security must be in the form of a certified or bank cashier's check made payable to Owner or a bid bond issued by a surety licensed to conduct business in the state where the Project is located and named in the current list of "Surety Companies Acceptable on Federal Bonds" as published in the Federal Register by the Audit Staff Bureau of Accounts, U.S. Treasury Department or by a Mississippi domiciled insurance company with at least an A rating in the latest printing of A. M. Best's Key Rating Guide and in accordance with Mississippi law. The Bid Security of the successful Bidder will be retained until he has executed the Agreement and furnished the required Contract Security, whereupon it will be returned; if he fails to execute and deliver the Agreement and furnish the required Contract Security within 10 days of the Notice of Award, Owner may annul the Notice of Award and the Bid Security of that Bidder will be forfeited. The Bid Security of any Bidder whom the Owner believes to have a reasonable chance of receiving the award may be retained by Owner until the earlier of the seventh day after the executed Agreement is delivered by Owner to Contractor and the required Contract Security is furnished or the sixty-first day after the Bid Opening. Bid Security of other Bidders will be returned within seven days of the Bid Opening.

6. CONTRACT TIME

The number of days for the completion of Work (the Contract Time) is set forth in the Contract Form. Any provisions for liquidated damages are set forth in the Contract Documents. The contract time is established in calendar days.

7. SUBCONTRACTORS, ETC.

7.1 If the Supplementary Conditions, Special Provisions, General Provisions or Specifications require the identity of certain Subcontractors and other persons and organizations to be submitted to Owner in advance of the Notice of Award, the apparent low Bidder, and any other Bidder so requested, will within seven days after the day of the Bid Opening submit to Owner a list of all Subcontractors and other persons and organizations (including those who are to furnish the principal items of materials and equipment) proposed for those portions of the Work as to which such identification is so required. Such list shall be accompanied by an experience statement with pertinent information as to similar projects and other evidence of qualification for each such Subcontractor, person and organization if requested by Owner. If Owner or Engineer after due investigation has reasonable objection to any proposed Subcontractor, other person or organization, he may before giving the Notice of Award request the apparent low Bidder to submit an acceptable substitute without an increase in his Bid price. If the apparent low Bidder declines to make any such substitution, he will not thereby sacrifice his Bid Security. Any Subcontractor, other person or organization so listed and to whom Owner or Engineer does not make written objection prior to the giving of the Notice of Award will be deemed acceptable to Owner and Engineer.

7.2 In contracts where the Contract Price is on the basis of Cost of the Work Plus a Fee. Contractor, prior to the Notice of Award, must identify in writing to Owner those portions of the Work that he proposes to subcontract and after the Notice of Award may only subcontract other portions of the Work with Owner's written consent.

7.3 Contractor shall not be required to employ any Subcontractor, other person or organization against whom he has reasonable objection.

8. BID FORM

8.1 The Bid Form is included in the Contract Documents; additional copies may be obtained from Engineer.

8.2 Bid Forms must be completed in ink or by typewriter. The Bid price of each item on the form must be stated in words and numerals; in case of a conflict, words will take precedence. In case of mathematical discrepancies, the unit price shall take precedence.

8.3 NOT USED

8.4 Bids by partnerships must be executed in the partnership name and signed by a partner, his title must appear under his signature and the official address of the partnership must be shown below the signature.

8.5 NOT USED

8.6 The Bid shall contain an acknowledgment of receipt of all Addenda (the numbers of which shall be filled in on the Bid Form).

8.7 NOT USED

9. SUBMISSION OF BIDS

Bids shall be submitted at the time and place indicated in the Invitation for Bid and shall be submitted in an opaque sealed envelope, marked with the Project title, name and address of the Bidder, Contractor's license number for state in which the work is to be done, and accompanied by the Bid Security and other required documents.

10. MODIFICATION AND WITHDRAWAL OF BIDS

Bids may be modified or withdrawn by an appropriate document duly executed (in the manner that a Bid must be executed) and delivered to the place where Bids are to be submitted at any time prior to the opening Bids.

11. OPENING OF BIDS

Bids will be opened as indicated in the Invitation to Bid

12. BIDS TO REMAIN OPEN

All Bids shall remain open for the period of time stated in the Bid Form after the day of the Bid Opening, but Owner may, in his sole discretion, release any Bid and return the Bid Security prior to the date.

13. AWARD OF CONTRACT

13.1 Owner reserves the right to reject any and all Bid Schedules and Total Bids waive any and all informalities, and the right to disregard all nonconforming or conditional Bids or counter proposals.

13.2 In evaluating Bids, Owner shall consider the qualifications of the Bidders, whether or not the Bids comply with the prescribed requirements, and alternates and unit prices if requested on the Bid forms. He may consider the qualifications and experience of Subcontractors and other persons and organizations (including those who are to furnish the principal items of materials and equipment) proposed for those portions of the Work as to which the identity of Subcontractors and other persons and organizations to do the Work in accordance with the Contract Documents to Owner's satisfaction within the prescribed time. Owner reserves the right to reject the Bid of any Bidder who does not pass any such evaluation to Owner's satisfaction.

13.3 If a contract is to be awarded, it will be awarded to the lowest responsible Bidder, for Bid schedule selected, whose evaluation by Owner indicates to the Owner that the award will be in the best interests of the Project and the Owner.

13.4 If the contract is to be awarded, Owner will give the apparent successful Bidder a Notice of Award within the time period specified for the Bid to be binding in the Bid Form.

13.5 Simultaneously with delivery of the executed counterparts of the Agreement to Owner, Contractor shall deliver to Owner the required Contract Security.

SECTION C: MANDATORY CONTRACT PROVISIONS

SPECIAL INSTRUCTION TO BIDDERS REGARDING EEO

Notice of Requirement for Affirmative Action to
Ensure Equal Employment Opportunity
(Executive Order 11246, as amended)

1. The Offeror's or Bidder's attention is called to the "Equal Opportunity Clause" and the "Standard Federal Equal Employment Opportunity Construction Contract Specifications" set forth herein.

2. The goals and timetables for minority and female participation, expressed in percentage terms for the contractor's aggregate work force in each trade on all construction work in the covered area, are as follows:

Goals for minority participation in each trade	Goals for female participation in each trade
31.0%	6.9%

The goals are applicable to all the contractor's construction work (whether or not it is Federal or federally assisted) performed in the covered area. If the contractor performs construction work in a geographical area located outside the covered area, it shall apply the goals established for such geographical area where the work is actually performed. With regard to this second area, the contractor also is subject to the goals for both its federally involved and non-federally involved construction.

The contractor's compliance with the executive order and the regulations in 41 CFR Part 60-4 shall be based on its implementation of the Equal Opportunity Clause, specific affirmative action obligations required by the specifications Set forth in 41 CFR Part 60-4.3(a), and its efforts to meet the goals established for the geographical area where the contract resulting from this solicitation is to be performed. The hours of minority and female employment and training must be substantially uniform throughout the length of the contract, and in each trade, and the contractor shall make a good faith effort to employ minorities and women evenly on each of its projects. The transfer of minority or female employees or trainees from contractor to contractor or from project to project, for the sole purpose of meeting the contractor's goals, shall be a violation of the contract, the executive order, and the regulations in 41 CFR Part 60-4. Compliance with the goals will be measured against the total work hours performed.

3. The contractor shall provide written notification to the Director, OFCCP, within 10 working days of award of any construction subcontract in excess of $10,000 at any tier for construction work under the contract resulting from this solicitation. The notification shall list the name, address, and telephone number of the subcontractor; employee identification

number; estimated dollar amount of the subcontract; estimated starting and completion dates of the subcontract; and the geographical area in which the contract is to be performed.

4. As used in this notice and in the contract resulting from this solicitation, the "covered area" is the State of Mississippi, Forrest County, City of Hattiesburg.

SPECIAL NOTICE TO BIDDERS

BUY AMERICAN - STEEL AND MANUFACTURED PRODUCTS FOR CONSTRUCTION CONTRACTS
(Aviation Safety and Capacity Expansion Act of 1990)

(a) The Aviation Safety and Capacity Expansion Act of 1990 provides that preference be given to steel and manufactured products produced in the United States when funds are expended pursuant to a grant issued under the Airport Improvement Program. The following terms apply:

1. Steel and manufactured products. As used in this clause, steel and manufactured products include (1) steel produced in the United States or (2) a manufactured product produced in the United States, if the cost of its components mined, produced or manufactured in the United States exceeds 60 percent of the cost of all its components and final assembly has taken place in the United States. Components of foreign origin of the same class or kind as the products referred to in subparagraphs (b) (1) or (2) shall be treated as domestic.

2. Components. As used in this clause, components means those articles, materials, and supplies incorporated directly into steel and manufactured products.

3. Cost of Components. This means the cost for production of the components, exclusive of final assembly labor costs.

(b) The successful bidder will be required to assure that only domestic steel and manufactured products will be used by the Contractor, subcontractors material, men, and suppliers in the performance of this contract, except those

(1) that the U. S. Department of Transportation has determined, under the Aviation Safety and Capacity Expansion Act of 1990, are not produced in the United States in sufficient and reasonably available quantities and of a satisfactory quality;

(2) that the U. S. Department of Transportation has determined, under the Aviation Safety and Capacity Expansion Act of 1990, that domestic preference would be inconsistent with the public interest; or

(3) that inclusion of domestic material will increase the cost of the overall project contract by more than 25 percent.

INSTRUCTIONS REGARDING CONTRACTOR'S INSURANCE

Contractor's Liability Insurance Requirements. The bidder shall provide with the Proposal a listing of both automobile and personal liability insurance coverage currently in force, along with a copy of a Certificate of Insurance as verification of that coverage. In addition, the bidder shall provide a statement of premium cost issued by the agent or insurance carrier for that coverage.

In the event the Owner determines that the low bidder's coverage in force is inadequate, the Owner may require the low bidder to procure additional coverage in amounts specified by the Owner. The cost premiums for such additional coverage shall be paid by the Owner in the form of a reimbursement under the contract.

In the event the low bidder is unable, after diligent effort, to procure such additional coverage as may be required by the Owner, the Owner shall provide such additional coverage, naming the contractor as insured or, at the option of the Owner, reduce the amount of additional coverage required or waive any requirement for additional coverage.

Third Party Coverage. In the event the bidding documents require the contractor to name the consultant and/or the Owner as additional insured, the bidder shall show the premium cost for the additional insured in the Proposal in the item for additional coverage. The amount shown in the bid item for additional premium above cost shall be that amount of additional premium the premium for the coverage shown in the Certificate of Insurance submitted with the bid. In the event additional coverage is required by the Owner, the additional premium cost for third party coverage above the amounts shown in the Certificate of Insurance shall be paid by the Owner in the form of a reimbursement under the contract.

REQUIRED LANGUAGE IN PROPOSALS FOR AIP CONTRACTS

Section 60-1.7(b) of the Regulations of the Secretary of Labor requires each bidder or prospective prime contractor and proposed subcontractor, where appropriate, to state in the bid or at the outset of negotiations for the contract whether it has participated in any previous contract or subcontract subject to the equal opportunity clause; and if so, whether it has filed with the Joint Reporting Committee, the director, an agency, or the former President's Committee on Equal Employment Opportunity all reports due under the applicable filing requirements. In any case in which a bidder or prospective prime contractor or proposed subcontractor which participated in a previous contract subject to Executive Order 10925, 11114. or 11246 has not filed a report due under the applicable filing documents, no contract or subcontract shall be awarded unless such contractor submits a report covering the delinquent period or such other period specified by the FAA or the Director, OFCCP.

Bid or Proposal Form. To effectuate the foregoing requirements, the sponsor is required to include in the bid or proposal form a statement substantially as follows:

The bidder (proposer) shall complete the following statement by checking the appropriate space.

The bidder (proposer) has ____ has not ____ participated in a previous contract subject to the equal opportunity clause prescribed by Executive Order 10925, or Executive Order 11114, or Executive Order 11246.

The bidder (proposer) has ____ has not ____ submitted all compliance reports in connection with any such contract due under the applicable filing requirements; and that representations indicating submission of required compliance reports signed by proposed subcontractors will be obtained prior to award of subcontracts.

If the bidder (proposer) has participated in a previous contract subject to the equal opportunity clause and has not submitted compliance reports due under applicable filing requirements, the Bidder (Proposer) shall submit a compliance report on Standard Form 100, "Employee Information Report EEO-1" prior to the award of contract.

Standard form 100 is normally furnished contractors annually, based on a mailing list currently maintained by the Joint Reporting Committee. In the event a contractor has not received the form, he may obtain it by writing to the following address:

Joint Reporting Committee
1800 G Street
Washington, DC 20506

CERTIFICATION REGARDING DEBARMENT, SUSPENSION, INELIGIBILITY AND VOLUNTARY EXCLUSION (49 CFR PART 29)

The bidder (offeror) certifies, by submission of this proposal or acceptance of this contract, that neither it nor its principals is presently debarred, suspended, proposed for debarment, declared ineligible, or voluntary excluded from participation in this transaction by any Federal department or agency. It further agrees that by submitting this proposal that it will include this clause without modification in all lower tier transactions, solicitations, proposals, contracts, and subcontracts. Where the bidder/offeror/contractor or any lower tier participant is unable to certify to this statement, it shall attach an explanation to this solicitation/proposal.

CERTIFICATION REGARDING FOREIGN TRADE RESTRICTIONS (49 CFR PART 30)

The contractor or subcontractor, by submission of an offer and/or execution of a contractor, certifies that it:

a. is not owned or controlled by one or more citizens or nationals of a foreign country included in the list of countries that discriminate against U. S. firms published by the Office of the United States Trade Representative (USTR);

b. has not knowingly entered into any contract or subcontract for this project with a contractor that is a citizen or national of a foreign country on said list, or is owned or controlled directly or indirectly by one or more citizens or nationals of a foreign country on said list.

c. has not procured any product nor subcontracted for the supply of any product for use on the project that is produced in a foreign country on said list.

Unless the restrictions of this clause are waived by the Secretary of Transportation in accordance with 49 CFR 30.17, no contract shall be awarded to a contractor or subcontractor who is unable to certify to the above. If the contractor knowingly procures or subcontracts for the supply of any product or service of a foreign country on said list for use on the project, the Federal Aviation Administration may direct, through the sponsor, cancellation of the contract at no cost to the Government.

Further, the contractor agrees that, if awarded a contract resulting from this solicitation, it will incorporate this provision for certification without modification in each contract and in all lower tier subcontracts. The contractor may rely upon the certification of a prospective subcontractor unless it has knowledge that the certification is erroneous. The contractor shall provide immediate written notice to the sponsor if the contractor learns that its certification or that of a subcontractor was erroneous when submitted or has become erroneous by reason of changed circumstances. The subcontractor agrees to provide immediate written notice to the contractor, if at any time it learns that its certification was erroneous by reason of changed circumstances.

This certification is a material representation of fact upon which reliance was placed when making the award. If it is later determined that the contractor or subcontractor knowingly rendered an erroneous certification, the Federal Aviation Administration may direct, through the sponsor, cancellation of the contract or subcontract for default at no cost to the Government.

Nothing contained in the foregoing shall be construed to require establishment of a system of records in order to render, in good faith, the certification required by this provision. The knowledge and information of a contractor is not required to exceed that which is normally possessed by a prudent person in the ordinary course of business dealings.

This certification concerns a matter within the jurisdiction of an agency of the United States of America and the making of a false, fictitious, or fraudulent certification may render the maker subject to prosecution under Title 18, United States Code, Section 1001.

BUY AMERICAN CERTIFICATION
(Aviation Safety and Capacity Expansion Act of 1990)

By submitting a bid/proposal under this solicitation, except for those items listed by the offeror below or on a separate and clearly identified attachment to this bid/proposal, the offeror certifies that steel and each manufactured product, is produced in the United States (as defined in the clause Buy American - Steel and Manufactured Products for Construction Contracts) and that components of unknown origin are considered to have been produced or manufactured outside the United States.

Offerors may obtain from ARE Consultants, Inc. lists of articles, materials, and supplies excepted from this provision.

PRODUCT	COUNTRY OF ORIGIN

CERTIFICATION OF BIDDER REGARDING EQUAL EMPLOYMENT OPPORTUNITY

GENERAL

BIDDER'S NAME

ADDRESS

INTERNAL REVENUE SERVICE EMPLOYER IDENTIFICATION NO.

NONSEGREGATED FACILITIES

NOTICE TO PROSPECTIVE FEDERALLY ASSISTED CONSTRUCTION CONTRACTORS (41 CFR 60-1.8)

(1) A Certification of Nonsegregated Facilities must be submitted prior to the award of a federally assisted construction contract exceeding $10,000 which is not exempt from the provisions of the equal opportunity clause.

(2) Contractors receiving federally assisted construction contract awards exceeding $10,000 which are not exempt from the provisions of the equal opportunity clause will be required to provide for the forwarding of the following notice to prospective subcontractors for supplies and construction contracts where the subcontracts exceed $10,000 and are not exempt from the provisions of the equal opportunity clause.

NOTE: The penalty for making false statements in offers is prescribed in 18 U. S. C. 1001.

NOTICE TO PROSPECTIVE SUBCONTRACTORS OF REQUIREMENTS FOR CERTIFICATION OF NONSEGREGATED FACILITIES

(1) A Certification of Nonsegregated Facilities must be submitted prior to the award of a subcontract exceeding $10,000 which is not exempt from the provisions of the equal opportunity clause.

(2) Contractors receiving subcontract awards exceeding $10,000 which are not exempt from the provisions of the equal opportunity clause will be required to provide for the forwarding of this notice to prospective subcontractors for supplies and construction contracts where the subcontracts exceed $10,000 and are not exempt from the provisions of the equal opportunity clause.

NOTE: The penalty for making false statements in offers is prescribed in 18 U. S. C. 1001.

CERTIFICATION OF NONSEGREGATED FACILITIES

The federally assisted construction contractor certifies that he does not maintain or provide for his employees any segregated facilities at any of his establishments, and that he does not permit his employees to perform their services at any location, under his control, where segregated facilities are maintained. The federally assisted construction certifies further that he will not maintain or provide for his employees any segregated facilities at any of his establishments, and that he will not permit his employees to perform their services at any location, under his control, where segregated facilities are maintained. The federally assisted construction contractor agrees that a breach of this certification is a violation of the equal opportunity clause in this contract. As used in this certification, the term "segregated facilities" means any waiting rooms, work areas, restrooms and washrooms, restaurants and other eating areas, time clocks, locker rooms and other storage or dressing areas, parking lots, drinking fountains, recreation or entertainment areas, transportation, and housing facilities provided for employees which are segregated by explicit directive or are in fact segregated on the basis of race, color, religion, sex, or national origin, because of habit, local custom, or any other reason. The federally assisted construction agrees that (except where he has obtained identical certifications from proposed subcontractors for specific time periods) he will obtain identical certifications from proposed subcontractors prior to the award of subcontracts exceeding $10,000 which are not exempt from the provisions of the equal opportunity clause, and that he will retain such certifications in his files.

NOTICE TO PROSPECTIVE CONTRACTORS OF REQUIREMENT FOR CERTIFICATION OF NONSEGREGATED FACILITIES

A Certification of Nonsegregated Facilities must be submitted prior to the award of a contract or subcontract exceeding $10,000 which is not exempt from the provisions of the Equal Opportunity Clause.

Certification - The information above is true and complete to the best of my knowledge and belief.

Name and Title of Signer (Please Type)

Signature Date

NOTE: The penalty for making false statements in offers is prescribed in 18 U. S. C. 1001.

WAGE, LABOR, EEO, SAFETY AND GENERAL REQUIREMENTS

Part A: FEDERAL AVIATION ADMINISTRATION REQUIREMENTS

A-1: Airport and Airway Improvement Program Project.

The work in this contract is included in Airport Improvement Project No. 3-28-0031-0018-2011 which is being undertaken and accomplished by the City of Hattiesburg(Sponsor) in accordance with the terms and conditions of a grant agreement between the Sponsor and the United States, under the Airport and Airway Improvement Act of 1982 (P. L. 97-248) as amended by the Airport and Airway Safety and Capacity Expansion Act of 1987 (P. L. 100-223) and Part 152 of the Federal Aviation Regulations (14 CFR Part 152), pursuant to which the United States has agreed to pay a certain percentage of the costs under those Acts. The United States is not a party to this contract and no reference in this contract to the FAA or any representative thereof, or the United States, by the contract, makes the Unites States a party to this contract.

A-2: Consent to Assignment.

The contractor shall obtain the prior written consent of the Sponsor to any proposed assignment of any interest in or part of this contract.

A-3: Convict Labor.

No convict labor may be employed under this contract.

A-4: Veterans Preference.

In the employment of labor (except in executive, administrative, and supervisory positions), preference shall be given to veterans of the Vietnam era and disabled veterans as defined in Section 515(c)(1) and (2) of the Act. However, this preference shall apply only where the individuals are available and qualified to perform the work to which the employment relates.

A-5: Withholding: Sponsor from Contractor.

Whether or not payments or advances to the City of Hattiesburg(Sponsor) are withheld or suspended by the FAA, the Sponsor may withhold or cause to be withheld from the contractor so much of the accrued payments or advances as may be considered necessary to pay laborers and mechanics employed by the contractor or any subcontractor on the work, the full amount of wages required by this contract.

A-6: Nonpayment of Wages.

If the contractor or subcontractor fails to pay any laborer or mechanic employed or working on the site of the work any of the wages required by this contract, the City of Hattiesburg(Sponsor) may, after written notice to the contractor, take such action as may be necessary to cause the suspension of any further payment or advance of funds until the violations cease.

A-7: FAA inspection and review.
The contractor shall allow any authorized representative of the FAA to inspect and review any work or materials used in the performance of this contract.

A-8: Subcontracts.

The contractor shall insert in each of his subcontracts the provisions contained in paragraphs A-1, A-3, A-4, A-5, A-6, and A-7 requiring the subcontractors to include these provisions in any lower tier subcontracts which they may enter into, together with a clause requiring this insertion in any further subcontracts that may in turn be made.

A-9: Contract termination.

Any violation or breach of the terms of this contract on the part of the contractor or subcontractor may result in the suspension or termination of this contract or such other action which may be necessary to enforce the rights of the parties of this agreement. (49 CFR Part 18).

A-10: Inspection of Records.

The contractor shall maintain an acceptable cost accounting system. The Sponsor, the FAA, and the Comptroller General of the United States shall have access to any books, documents, paper, and records of the contractor which are directly pertinent to the specific contract for the purposes of making an audit, examination, excerpts, and transcriptions. The contractor shall maintain all required records for three years after the Sponsor makes final payment and all other pending matters are closed. (49 CFR Part 18).

A-11: Rights to Inventions.

All rights to inventions and materials generated under this contract are subject to regulations issued by the FAA and the Sponsor of the Federal grant under which this contract is executed. Information regarding these rights is available from the FAA and the Sponsor. (49 CFR Part 18).

A-12: General Civil Rights Provisions.

The contractor assures that it will comply with pertinent statutes, Executive orders and such rules as are promulgated to assure that no person shall, on the grounds of race, creed, color, national origin, sex, age, or handicap be excluded from participating in any activity conducted with or benefiting from Federal assistance. This provision binds the contractor from the bid solicitation period through the completion of the contract. (Section 520, Airport and Airway Improvement Act of 1982).

Part B: DAVIS-BACON ACT REQUIREMENTS (29 CFR PART 5)

B-1 Minimum Wages.

(a) All laborers and mechanics employed or working upon the site of the work will be paid unconditionally and not less often than once a week, and without subsequent deduction or rebate on any account (except such payroll deductions as are permitted by the Secretary of Labor under the Copeland Act (29 CFR Part 3)), the full amount of wages and bona fide fringe benefits (or cash equivalent thereof) due at time of payment computed at rates not less than those contained in the wage determination of the Secretary of Labor which is attached hereto and made a part hereof, regardless of any contractual relationship which may be alleged to exist between the contractor and such laborers and mechanics. Contributions made or costs reasonably anticipated for bona fide fringe benefits under section 1 (b) (2) of the Davis-Bacon Act on behalf of laborers or mechanics are considered wages paid to laborers or mechanics, subject to the provisions of paragraph (B1) (d) of this section; also, regular contributions made or costs incurred for more than a weekly period (but not less often than quarterly) under plans, funds, or programs which cover the particular weekly period, are deemed to be constructively made or incurred during such weekly period. Such laborers and mechanics shall be paid the appropriate wage rate and fringe benefits on the wage determination for the classification of work actually performed, without regard to skill, except as provided in 29 CFR Part 5.5(a) (4). Laborers or mechanics performing work in more than one classification may be compensated at the rate specified for each classification for the time actually worked therein; provided, that the employer's payroll records accurately set forth the time spent in each classification in which work is performed. The wage determination (including any additional classification and wage rates conformed under (B-1) (b) of this section) and the Davis-Bacon poster (WH-1321) shall be posted at all times by the contractor and its subcontractors at the site of the work in a prominent and accessible place where it can easily be seen by the workers.

(b) (1) The contracting officer shall require that any class of laborers or mechanics which is not listed in the wage determination and which is to be employed under the contract shall be classified in conformance with the wage determination. The contracting officer shall approve an additional classification and wage rate and fringe benefits therefore only when the following criteria have been met:

(i) The work to be performed by the classification requested is not performed by a classification in the wage determinations; and
(ii) The classification is utilized in the area by the construction industry; and

(iii) The proposed wage rate, including any bona fide fringe benefits, bears a reasonable relationship to the wage rates contained in the wage determination.

(2) If the contractor and the laborers and mechanics to be employed in the classification (if known), or their representatives, and the contracting officer agree on the classification and wage rate (including the amount designated for fringe benefits where appropriate), a report of the action taken shall be sent by the contracting officer to the Administrator of the Wage and Hour

Division, Employment Standards Administration, U. S. Department of Labor, Washington, D.C. 20210. The Administrator, or an authorized representative, will approve, modify, or disapprove every additional classification action within 30 days of receipt and so advise the contracting officer or will notify the contracting officer within the 30-day period that additional time is necessary. (Approved by the Office of Management and Budget under OMB Control Number 1215-0140).

(3) In the event the contractor, the laborers or mechanics to be employed in the classification or their representatives and the contracting officer do not agree on the proposed classification and wage rate (including the amount designated for fringe benefits where appropriate), the contracting officer shall refer the questions, including the views of all interested parties and the recommendation of the contracting officer, to the Administrator for determination. The Administrator, or an authorized representative, will issue a determination within 30 days of receipt and so advise the contracting officer or will notify the contracting officer within the 30-day period that additional time is necessary. (Approved by the Office of Management and Budget under OMB Control Number 1215-0140).

(4) The wage rate (including fringe benefits where appropriate) determined pursuant to subparagraphs (B1) (b) (2) or (3) of this paragraph, shall be paid to all workers performing work in the classification under this contract from the first day on which work is performed in the classification.

(c) Whenever the minimum wage rate prescribed in the contract for a class of laborers or mechanics includes a fringe benefit which is not expressed as an hourly rate, the contractor shall either pay the benefit as stated in the wage determination or shall pay another bona fide fringe benefit or an hourly cash equivalent thereof.

(d) If the contractor does not make payments to a trustee or other third person, the contractor may consider as part of the wages of any laborer or mechanic the amount of any costs reasonably anticipated in providing bona fide fringe benefits under a plan or program, provided, that, the Secretary of Labor has found, upon the written request of the contractor, that the applicable standards of the Davis-Bacon Act have been met. The Secretary of Labor may require the contractor to set aside in a separate account assets for the meeting of obligations under the plan or program. (Approved by the Office of Management and Budget under OMB Control Number 1215-0140).

B-2 Withholding.

The Federal Aviation Administration or the Sponsor shall upon its own action or upon written request of an authorized representative of the Department of Labor withhold or cause to be withheld from the contractor under this contract or any other Federal contract with the same prime contractor, or any other Federally-assisted contract subject to David-Bacon prevailing wage requirements, which is held by the same prime contractor, so much of the accrued payments or advances as may be considered necessary to pay laborers and mechanics, including apprentices, trainees, and helpers, employed by the contractor or any subcontractor the full amount of wages required by the contract. In the event of failure to pay any laborer or mechanic,

including any apprentice, trainee, or helper, employed or working on the site of work, all or part of the wages required by the contract, the Federal Aviation Administration may, after written notice to the contractor, sponsor, applicant, or owner, take such action as may be necessary to cause the suspension of any further payment, advance, or guarantee of funds until such violations have ceased.

B-3 Payrolls and Basic Records.

(a) Payrolls and basic records relating thereto shall be maintained by the contractor during the course of the work and preserved for a period of three years thereafter for all laborers and mechanics working at the site of the work. Such records shall contain the name, address, and social security number of each such worker, his or her current classification, hourly rates of wages paid (including rates of contributions or costs anticipated for bona fide fringe benefits or cash equivalents thereof of the types described in 1(b) (2) (b) of the Davis-Bacon Act), daily and weekly number of hours worked, deductions made and actual wages paid. Whenever the Secretary of Labor has found under 29 CFR 5.5(a) (1) (iv) that the wages of any laborer or mechanic include the amount of any costs reasonably anticipated in providing benefits under a plan or program described in section 1 (b) (2) (B) of the Davis-Bacon Act, the contractor shall maintain records which show that the commitment to provide such benefits is enforceable, that the plan or program has been communicated in writing to the laborers or mechanics affected, and records which show the costs anticipated or the actual costs incurred in providing such benefits. Contractors employing apprentices or trainees under approved programs shall maintain written evidence of the registration of apprenticeship programs and certification of trainee programs, the registration of the apprentices and trainees, and the ratios and wage rates prescribed in the applicable programs (29 CFR 5.5(a) (3) (i) (Approved by the Office of Management and Budget under OMB Control Numbers 1215-0140 and 1215-0017).

(b) (1) The contractor shall submit weekly, for each week in which any contract work is performed, a copy of all payrolls to the applicant, sponsor, or owner, as the case may be, for transmission to the Federal Aviation Administration. The payrolls submitted shall set out accurately and completely all of the information required to be maintained under paragraph 5.5(a) (3) (i) above. This information may be submitted in any form desired. Optional Form WH-347 is available for this purpose and may be purchased from the Superintendent of Documents (Federal Stock Number 029-005-00014-1), U. S. Government Printing Office, Washington, D.C. 20402. The prime contractor is responsible for the submission of copies of payrolls by all subcontractors. (Approved by the Office of Management and Budget under OMB Control Number 1215-0149).

(2) Each payroll submitted shall be accompanied by a "Statement of Compliance," signed by the contractor or subcontractor or his or her agent who pays or supervises the payment of the persons employed under the contract and shall certify the following:

(i) That the payroll for the payroll period contains the information required to be maintained under paragraph B-3 (a) above and that such information is correct and complete;

(ii) That each laborer and mechanic (including each helper, apprentice and trainee) employed on the contract during the payroll period has been paid the full weekly wages earned, without rebate, either directly or indirectly, and that no deductions have been made either directly or indirectly from the full wages earned, other than permissible deductions as set forth in Regulations 29 CFR Part 3;

(iii) That each laborer or mechanic has been paid not less than the applicable wage rates and fringe benefits or cash equivalents for the classification of work performed, as specified in the applicable wage determination incorporated into the contract.

(3) The weekly submission of a properly executed certification set forth on the reverse side of Optional Form WH-347 shall satisfy the requirement for submission of the "Statement of Compliance" required by paragraph B-3 (b) (2) of this section.

(4) The falsification of any of the above certifications may subject the contractor or subcontractor to civil or criminal prosecution under Section 1001 of Title 18 and Section 231 of Title 31 of the United States Code.

(c) The contractor or subcontractor shall make the records required under paragraph B-3 (a) of this section available for inspection, copying or transcription by authorized representatives of the Sponsor, the Federal Aviation Administration or the Department of Labor, and shall permit such representatives to interview employees during working hours on the job. If the contractor or subcontractor fails to submit the required records or to make them available, the Federal agency may, after written notice to the contractor, sponsor, applicant or owner, take such action as may be necessary to cause the suspension of any further payment, advance, or guarantee of funds. Furthermore, failure to submit the required records upon request or to make such records available may be grounds for debarment action pursuant to 29 CFR 5.12.

B-4 Apprentices and Trainees.

(a) Apprentices. Apprentices will be permitted to work at less than the predetermined rate for the work they perform when they are employed pursuant to and individually registered in a bona fide apprenticeship program registered with the U. S. Department of Labor, Employment and Training Administration, Bureau of Apprenticeship and Training, or with a State Apprenticeship Agency recognized by the Bureau, or if a person is employed in his or her first 90 days of probationary employment as an apprentice in such an apprenticeship program, who is not individually registered in the program, but who has been certified by the Bureau of Apprenticeship and Training or a State Apprenticeship Agency (where appropriate) to be eligible for probationary employment as an apprentice. The allowable ratio of apprentices to journeymen on the job site in any craft classification shall not be greater than the ratio permitted to the contractor as to the entire work force under the registered program. Any worker listed on a payroll at an apprentice wage rate, who is not registered or otherwise employed as stated above, shall be paid not less than the applicable wage rate on the wage determination for the classification of work actually performed. In addition, any apprentice performing work on the job site in excess of the ratio permitted under the registered program shall be paid not less than the applicable wage rate on the wage determination for the work actually performed. Where a

contractor is performing construction on a project in a locality other than that in which its program is registered, the ratios and wage rates (expressed in percentages of the journeyman's hourly rate) specified in the contractor's or subcontractor's registered program shall be observed. Every apprentice must be paid not less than the rate specified in the registered program for the apprentice's level of progress, expressed as a percentage of the journeymen hourly rate specified in the applicable wage determination. Apprentices shall be paid fringe benefits in accordance with the provisions of the apprenticeship program. If the apprenticeship program does not specify fringe benefits, apprentices must be paid the full amount of fringe benefits listed on the wage determination for the applicable classification. If the Administrator determines that a different practice prevails for the applicable apprentice classification, fringes shall be paid in accordance with that determination. In the event the Bureau of Apprenticeship and Training, or the State Apprenticeship Agency recognized by the Bureau, withdraws approval of an apprenticeship program, the contractor will no longer be permitted to utilize apprentices at less than the applicable predetermined rate for the work performed until an acceptable program is approved.

(b) Trainees. Except as provided in 29 CFR 5.16, trainees will not be permitted to work at less than the predetermined rate for the work performed unless they are employed pursuant to and individually registered in a program which has received prior approval, evidenced by formal certification by the U. S. Department of Labor, Employment Training Administration. The ratio of trainee to journeymen on the job site shall not be greater than permitted under the plan approved by the Employment and Training Administration. Every trainee must be paid at not less than the rate specified in the approved program for the trainee's level of progress, expressed as a percentage of the journeyman hourly rate specified in the applicable wage determination. Trainee's shall be paid fringe benefits in accordance with the provisions of the trainee program. If the trainee program does not mention fringe benefits, trainees shall be paid the full amount of fringe benefits listed on the wage determination unless the Administrator of the Wage and Hour Division determines that there is an apprenticeship program associated with the corresponding journeyman wage rate on the wage determination which provides for less than full fringe benefits for apprentices. Any employee listed on the payroll at a trainee rate who is not registered and participating in a training plan approved by the Employment and Training Administration shall be paid not less than the applicable wage rate on the wage determination for the classification of work actually performed. In addition, any training performing work on the job site in excess of the ratio permitted under the registered program shall be paid not less than the applicable wage rate on the wage determination for work actually performed. In the event the Employment and Training Administration withdraws approval of a training program, the contractor will no longer be permitted to utilize trainees at less than the applicable predetermined rate for the work performed until an acceptable program is approved.

(c) Equal Employment Opportunity. The utilization of apprentices, trainees and journeymen under this part shall be in conformity with the equal employment opportunity requirements of Executive Order 11246, as amended, and 29 CFR Part 30.

B-5 Compliance with Copeland Act Requirements.

The Contractor shall comply with the requirements of 29 CFR Part 3, which are incorporated by reference in this contract.

B-6 Subcontracts.

The contractor or subcontractor shall insert in any subcontracts the clauses contained in 29 CFR Part 5.5(a) (1) through (10) and such other clauses as the Federal Aviation Administration may by appropriate instructions require, and also a clause requiring the subcontractors to include these clauses in any lower tier subcontracts. The prime contractor shall be responsible for the compliance by any subcontractor or lower tier subcontractor with all the contract clauses in 29 CFR Part 5.5.

B-7 Compliance with Davis-Bacon and Related Act Requirements.

All rulings and interpretations of the Davis-Bacon and Related Acts contained in 29 CFR Parts 1, 3, and 5 are herein incorporated by reference in this contract.

B-8 Disputes Concerning Labor Standards.

Disputes arising out of the labor standards provisions of this contract shall not be subject to the general disputes clause of this contract. Such disputes shall be resolved in accordance with the procedures of the Department of Labor set forth in 29 CFR Parts 5, 6, and 7. Disputes within the meaning of this clause include disputes between the
contractor (or any of its subcontractors) and the contracting agency, the U. S. Department of Labor, or the employees or their representatives.

B-9 Certification of Eligibility.

(a) By entering into this contract, the contractor certifies that neither it (nor he or she) nor any person or firm who has an interest in the contractor's firm is a person or firm ineligible to be awarded Government contracts by virtue of section 3(a) of the Davis-Bacon Act or 29 CFR 5.12(a) (1).

(b) No part of this contract shall be subcontracted to any person or firm ineligible for award of a Government contract by virtue of section 3 (a) of the Davis-Bacon Act or 29 CFR 5.12(a) (1).

(c) The penalty for making false statements is prescribed in the U. S. Criminal Code, 18 U. S. C. 1001.

B-10 Contract Termination: Debarment.

A breach of the contract clauses in paragraph B-1 through B-9 of this section and paragraphs C-1 through C-5 of Section C may be grounds for termination of the contract, and for the debarment as a contractor and a subcontractor as provided in 29 CFR 5.12.

B-11: The following inserts include the wage determination for this project. The "Highway" determination shall priority for the project.

General Decision Number: MS170235 04/14/2017 MS235

Superseded General Decision Number: MS20160235

State: Mississippi

Construction Type: Highway

County: Forrest County in Mississippi.

HIGHWAY CONSTRUCTION PROJECTS

Note: Under Executive Order (EO) 13658, an hourly minimum wage of $10.20 for calendar year 2017 applies to all contracts subject to the Davis-Bacon Act for which the contract is awarded (and any solicitation was issued) on or after January 1, 2015. If this contract is covered by the EO, the contractor must pay all workers in any classification listed on this wage determination at least $10.20 (or the applicable wage rate listed on this wage determination, if it is higher) for all hours spent performing on the contract in calendar year 2017. The EO minimum wage rate will be adjusted annually. Additional information on contractor requirements and worker protections under the EO is available at www.dol.gov/whd/govcontracts.

Modification Number	Publication Date
0	01/06/2017
1	04/14/2017

* ELEC0903-006 12/01/2016

	Rates	Fringes
ELECTRICIAN	$ 26.10	12.5%+4.00

SUMS2010-054 08/04/2014

	Rates	Fringes
CARPENTER (Form Work Only)	$ 12.00	0.00
CEMENT MASON/CONCRETE FINISHER	$ 11.54	1.63
HIGHWAY/PARKING LOT STRIPING:		
Truck Driver (Line Striping Truck)	$ 14.55	0.00
INSTALLER - SIGN	$ 12.19	0.00
INSTALLER: Guardrail	$ 12.39	0.00
IRONWORKER, REINFORCING	$ 16.44	0.00
LABORER: Common or General, Including Asphalt Raking, Shoveling, Spreading	$ 10.34	0.00
LABORER: Flagger	$ 11.42	0.00
LABORER: Grade Checker	$ 14.82	0.00
LABORER: Luteman	$ 12.88	0.00

LABORER: Mason Tender - Cement/Concrete	$ 10.57	0.00
LABORER: Pipelayer	$ 14.50	0.00
LABORER: Laborer-Cones/ Barricades/Barrels - Setter/Mover/Sweeper	$ 12.17	0.00
OPERATOR: Asphalt Spreader	$ 14.71	0.00
OPERATOR: Backhoe/Excavator/Trackhoe	$ 14.20	0.00
OPERATOR: Bobcat/Skid Steer/Skid Loader	$ 11.86	0.00
OPERATOR: Broom/Sweeper	$ 10.94	0.00
OPERATOR: Bulldozer	$ 13.99	0.00
OPERATOR: Concrete Saw	$ 13.93	0.00
OPERATOR: Crane	$ 14.80	0.00
OPERATOR: Distributor	$ 11.46	0.00
OPERATOR: Grader/Blade	$ 16.09	0.00
OPERATOR: Loader	$ 13.99	0.00
OPERATOR: Mechanic	$ 13.00	0.00
OPERATOR: Milling Machine	$ 16.96	0.00
OPERATOR: Oiler	$ 12.22	0.00
OPERATOR: Paver (Asphalt, Aggregate, and Concrete)	$ 11.56	0.00
OPERATOR: Roller (All Types)	$ 12.17	0.00
OPERATOR: Scraper	$ 14.00	0.00
OPERATOR: Tractor	$ 12.00	0.00
SURVEYOR (Staking, Marking and Brush Clearing)	$ 11.56	0.00
TRUCK DRIVER: Flatbed Truck	$ 14.72	0.00
TRUCK DRIVER: Lowboy Truck	$ 14.18	0.00
TRUCK DRIVER: Mechanic	$ 12.31	0.00
TRUCK DRIVER: Water Truck	$ 17.08	0.00
TRUCK DRIVER: Dump Truck (All Types)	$ 11.58	0.00
TRUCK DRIVER: Semi/Trailer Truck	$ 14.36	0.00

WELDERS - Receive rate prescribed for craft performing

operation to which welding is incidental.

==========

Note: Executive Order (EO) 13706, Establishing Paid Sick Leave for Federal Contractors applies to all contracts subject to the Davis-Bacon Act for which the contract is awarded (and any solicitation was issued) on or after January 1, 2017. If this contract is covered by the EO, the contractor must provide employees with 1 hour of paid sick leave for every 30 hours they work, up to 56 hours of paid sick leave each year. Employees must be permitted to use paid sick leave for their own illness, injury or other health-related needs, including preventive care; to assist a family member (or person who is like family to the employee) who is ill, injured, or has other health-related needs, including preventive care; or for reasons resulting from, or to assist a family member (or person who is like family to the employee) who is a victim of, domestic violence, sexual assault, or stalking. Additional information on contractor requirements and worker protections under the EO is available at www.dol.gov/whd/govcontracts.

Unlisted classifications needed for work not included within the scope of the classifications listed may be added after award only as provided in the labor standards contract clauses (29CFR 5.5 (a) (1) (ii)).

The body of each wage determination lists the classification and wage rates that have been found to be prevailing for the cited type(s) of construction in the area covered by the wage determination. The classifications are listed in alphabetical order of "identifiers" that indicate whether the particular rate is a union rate (current union negotiated rate for local), a survey rate (weighted average rate) or a union average rate (weighted union average rate).

Union Rate Identifiers

A four letter classification abbreviation identifier enclosed in dotted lines beginning with characters other than "SU" or "UAVG" denotes that the union classification and rate were prevailing for that classification in the survey. Example: PLUM0198-005 07/01/2014. PLUM is an abbreviation identifier of the union which prevailed in the survey for this classification, which in this example would be Plumbers. 0198 indicates the local union number or district council number where applicable, i.e., Plumbers Local 0198. The next number, 005 in the example, is an internal number used in processing the wage determination. 07/01/2014 is the effective date of the most current negotiated rate, which in this example is July 1, 2014.

Union prevailing wage rates are updated to reflect all rate changes in the collective bargaining agreement (CBA) governing this classification and rate.

Survey Rate Identifiers

Classifications listed under the "SU" identifier indicate that no one rate prevailed for this classification in the survey and the published rate is derived by computing a weighted average

rate based on all the rates reported in the survey for that classification. As this weighted average rate includes all rates reported in the survey, it may include both union and non-union rates. Example: SULA2012-007 5/13/2014. SU indicates the rates are survey rates based on a weighted average calculation of rates and are not majority rates. LA indicates the State of Louisiana. 2012 is the year of survey on which these classifications and rates are based. The next number, 007 in the example, is an internal number used in producing the wage determination. 5/13/2014 indicates the survey completion date for the classifications and rates under that identifier.

Survey wage rates are not updated and remain in effect until a new survey is conducted.

Union Average Rate Identifiers

Classification(s) listed under the UAVG identifier indicate that no single majority rate prevailed for those classifications; however, 100% of the data reported for the classifications was union data. EXAMPLE: UAVG-OH-0010 08/29/2014. UAVG indicates that the rate is a weighted union average rate. OH indicates the state. The next number, 0010 in the example, is an internal number used in producing the wage determination. 08/29/2014 indicates the survey completion date for the classifications and rates under that identifier.

A UAVG rate will be updated once a year, usually in January of each year, to reflect a weighted average of the current negotiated/CBA rate of the union locals from which the rate is based.

WAGE DETERMINATION APPEALS PROCESS

1.) Has there been an initial decision in the matter? This can be:

* an existing published wage determination
* a survey underlying a wage determination
* a Wage and Hour Division letter setting forth a position on a wage determination matter
* a conformance (additional classification and rate) ruling

On survey related matters, initial contact, including requests for summaries of surveys, should be with the Wage and Hour Regional Office for the area in which the survey was conducted because those Regional Offices have responsibility for the Davis-Bacon survey program. If the response from this initial contact is not satisfactory, then the process described in 2.) and 3.) should be followed.

With regard to any other matter not yet ripe for the formal process described here, initial contact should be with the Branch of Construction Wage Determinations. Write to:

Branch of Construction Wage Determinations
Wage and Hour Division
U.S. Department of Labor
200 Constitution Avenue, N.W.
Washington, DC 20210

2.) If the answer to the question in 1.) is yes, then an interested party (those affected by the action) can request review and reconsideration from the Wage and Hour Administrator (See 29 CFR Part 1.8 and 29 CFR Part 7). Write to:

Wage and Hour Administrator
U.S. Department of Labor
200 Constitution Avenue, N.W.
Washington, DC 20210

The request should be accompanied by a full statement of the interested party's position and by any information (wage payment data, project description, area practice material, etc.) that the requestor considers relevant to the issue.

3.) If the decision of the Administrator is not favorable, an interested party may appeal directly to the Administrative Review Board (formerly the Wage Appeals Board). Write to:

Administrative Review Board
U.S. Department of Labor
200 Constitution Avenue, N.W.
Washington, DC 20210

4.) All decisions by the Administrative Review Board are final.

==========

END OF GENERAL DECISION

Part C: CONTRACT WORKHOURS AND SAFETY STANDARDS ACT REQUIREMENTS (29 CFR PART 5)

C-1: Overtime Requirements.

No contractor or subcontractor contracting for any part of the contract work which may require or involve the employment of laborers or mechanics shall require or permit any such laborer or mechanic, including watchmen and guards, in any workweek in which he or she is employed on such work to work in excess of forty hours in such workweek unless such laborers or mechanic receives compensation at a rate not less than one and one-half times the basic rate of pay for all hours worked in excess of forty hours in such workweek.

C-2: Violation; Liability for Unpaid Wages; Liquidated Damages.

In the event of any violation of the clause set forth in paragraph C-1 above, the contractor or any subcontractor responsible therefore shall be liable for the unpaid wages. In addition, such contractor and subcontractor shall be liable to the United States (in the case of work done under contract for the District of Columbia or a territory, to such District or to such territory), for liquidated damages. Such liquidated damages shall be computed with respect to each individual laborer or mechanic, including watchmen and guards, employed in violation of the clause set for the in paragraph C-1 above, in the sum of $10 for each calendar day on which such individual was required or permitted to work in excess of the standard workweek of forty hours without payment of the overtime wages required by the clause set forth in paragraph C-1 above.

C-3: Withholding for Unpaid Wages and Liquidated Damages.

The Federal Aviation Administration or the Sponsor shall upon its own action or upon written request of an authorized representative of the Department of Labor withhold or cause to be withheld, from any monies payable on account of work performed by the contractor or subcontractor under any such contract or any other Federal contract with the same prime contractor, or any other Federally-assisted contract subject to the Contract Work Hours and Safety Standards Act, which is held by the same prime contractor, such sums as may be determined to be necessary to satisfy any liabilities of such contractor or subcontractor for unpaid wages and liquidated damages as provided in the clause set forth in paragraph C-2 above.

C-4: Subcontractors.

The contractors or subcontractor shall insert in any subcontracts the clauses set forth in paragraphs C-1 through C-4 and also a clause requiring the subcontractor to include these clauses in any lower tier subcontracts. The prime contractor shall be responsible for compliance by any subcontractor or lower tier subcontractor with the clauses set forth in paragraphs C-1 through C-4.

C-5: Working Conditions.

No contractor or subcontractor may require any laborer or mechanic employed in the performance of any contract to work in surroundings or under working conditions that are unsanitary, hazardous or dangerous to his health or safety as determined under construction safety and health standards (29 CFR Part 1926) issued by the Department of Labor.

Part D: EQUAL EMPLOYMENT OPPORTUNITY (41 CFR PART 60-1.4(b))

During the performance of this contract, the contractor agrees as follows:

D-1: The contractor will not discriminate against any employee or applicant for employment because of race, color, religion, sex, or national origin. The contractor will take affirmative action to ensure that applicants are employed, and that employees are treated during employment without regard to their race, color, religion, sex, or national origin. Such action shall include, but not be limited to the following:

Employment, upgrading, demotion, or transfer; recruitment or recruitment advertising; layoff or termination; rates of pay or other forms of compensation; and selection for training, including apprenticeship. The contractor agrees to post in conspicuous places, available to employees and applicants for employment, notices to be provided setting forth the provisions of this nondiscrimination clause.

D-2: The contractor will, in all solicitations or advertisements for employees placed by or on behalf of the contractor, state that all qualified applicants will receive consideration for employment without regard to race, color, religion, sex, or national origin.

D-3: The contractor will send to each labor union or representative of workers with which he has a collective bargaining agreement or other contract or understanding, a notice to be provided advising the said labor union or workers' representatives of the contractor's commitments under this section, and shall post copies of the notice in conspicuous places available to employees and applicants for employment.

D-4: The contractor will comply with all provisions of Executive Order 11246 of September 24, 1965, as amended, and of the rules, regulations, and relevant orders of the Secretary of Labor.

D-5: The contractor will furnish all information and reports required by Executive Order 11246 of September 24, 1965, and by rules, regulations, and orders of the Secretary of Labor, or pursuant thereto, and will permit access to his books, records, and accounts by the administering agency and the Secretary of Labor for purposes of investigation to ascertain compliance with such rules, regulations, and orders.

D-6: In the event of the contractor's noncompliance with the nondiscrimination clauses of this contract or with any of the said rules, regulations, or orders, this contract may be canceled, terminated or suspended in whole or in part and the contractor may be declared ineligible for further Government contracts or federally assisted construction contracts in accordance with procedure authorized in Executive Order 11246 of September 24, 1965, and such other sanctions may be imposed and remedies invoked as provided in Executive Order 11246 of September 24, 1965, or by rule, regulation, or order of the Secretary of Labor, or as otherwise provided by law.

D-7: The contractor will include the portion of the sentence immediately preceding paragraph D-1 and the provisions of paragraphs D-1 through D-7 in every subcontract or purchase order unless exempted by rules, regulations, or orders of the Secretary of Labor issued pursuant to section 204 of Executive Order 11246 of September 24, 1965, so that such provisions will be binding upon each subcontractor or vendor. The contractor will take such action with respect to any subcontract or purchase order as the administering agency may direct as a means of enforcing such provision, including sanctions for noncompliance: Provided, however, that in the event a contractor becomes involved in, or is threatened with, litigation with a subcontractor or vendor as a result of such direction by the administering agency the contractor may request the United States to enter into such litigation to protect the interests of the United States.

Part E: CLEAN AIR AND WATER POLLUTION CONTROL REQUIREMENTS

E-1: Any other provision herein to the contrary notwithstanding, the contractor in carrying out work under this contract, shall at all times comply with all applicable state and federal air and water quality standards; with all pollution control laws; and with such rules, regulations, and directives as may be lawfully issued by a local, state, or federal agency having the area surrounding where work under this contract will be performed. In addition, the contractor shall comply with directives given by the Project Engineer in implementation of the letter and intent of FAA Advisory Circular 150/5370-10, Item P-156, Temporary Air and Water Pollution, Soil Erosion and Siltation Control. Copies of this Advisory Circular can be obtained from Department of Transportation, Distribution Unit, TAD-484.3, Washington, D.C. 20590.

E-2: Contractors and subcontractors agree:

a. That any facility to be used in the performance of the contract or subcontract or to benefit from the contract is not listed on the Environmental Protection Agency (EPA) List of Violating Facilities;

b. To comply with all the requirements of Section 114 of the Clean Air Act, as amended, 42 U.S.C. 1857 et seq. and Section 308 of the Federal Water Pollution Control Act, as amended, 33 U.S.C. 1251 et seq. relating to inspection, monitoring, entry, reports, and information, as well as all other requirements specified in Section 114 and Section 308 of the Acts, respectively, and all other regulations and guidelines issued thereunder;

c. That, as a condition for the award of this contract, the contractor or subcontractor will notify the awarding official of the receipt of any communication from the EPA indicating that a facility to be used for the performance of or benefit from the contract is under consideration to be listed on the EPA List of Violating Facilities;

d. To include or cause to be included in any construction contract or subcontract which exceeds $100,000 the aforementioned criteria and requirements.

Part F: STANDARD FEDERAL EQUAL EMPLOYMENT OPPORTUNITY CONSTRUCTION

CONTRACT SPECIFICATIONS (41 CFR 60-4.3)

1. As used in these specifications:

a. "Covered area" means the geographical area described in the solicitation from which this contract resulted;

b. "Director" means Director, Office of Federal Contract Compliance Programs (OFCCP), U.S. Department of Labor, or any person to whom the Director delegates authority;

c. "Employer identification number" means the Federal social security number used on the Employer's Quarterly Federal Tax Return, U.S. Treasury Department Form 941;

d. "Minority" includes:

(1) Black (all) persons having origins in any of the Black African racial groups not of Hispanic origin);

(2) Hispanic (all persons of Mexican, Puerto Rican, Cuban, Central or South American, or other Spanish culture or origin regardless of race);

(3) Asian and Pacific Islander (all persons having origins in any of the original peoples of the Far East, Southeast Asia, the Indian Subcontinent, or the Pacific Islands); and

(4) American Indian or Alaskan native (all persons having origins in any of the original tribal affiliations through membership and participation or community identification).

2. Whenever the contractor, or any subcontractor at any tier, subcontracts a portion of the work involving any construction trade, it shall physically include in each subcontract in excess of $10,000 the provisions of these specifications.

3. If the contractor is participating (pursuant to 41 CFR 60-4.5) in a Hometown Plan approved by the U.S. Department of Labor in the covered area either individually or through an association, its affirmative action obligations on all work in the Plan area (including goals and timetables) shall be in accordance with that Plan for those trades which have unions participating in the Plan. Contractors shall be able to demonstrate their participation in and compliance with the provisions of any such Hometown Plan. Each contractor or subcontractor participating in an approved plan is individually required to comply with its obligations under the EEO clause and to make a good faith effort to achieve each goal under the Plan in each trade in which it has employees. The overall good faith performance by other contractors or subcontractors toward a goal in an approved Plan does not excuse any covered contractor's or subcontractor's failure to take good faith efforts to achieve the Plan goals and timetables.

4. The contractor shall implement the specific affirmative action standards provided in paragraphs 7a through 7p of these specifications. The goals set forth in the solicitation from which this contract resulted are expressed as percentages of the total hours of employment and training of minority and female utilization the contractor should reasonably be able to achieve in each construction trade in which it has employees in the covered area. Covered construction contractors performing construction work in a geographical area where they do not have a Federal or federally assisted construction contract shall apply the minority and female goals established for the geographical area where the work is being performed. Goals are published periodically in the Federal Register in notice form, and such notices may be obtained from any Office of Federal Contract Compliance Programs office or from Federal procurement contracting officers. The contractor is expected to make substantially uniform progress in meeting its goals in each craft during the period specified.

5. Neither the provisions of any collective bargaining agreement nor the failure by a union with whom the contractor has a collective bargaining agreement to refer either minorities or women shall excuse the contractor's obligations under these specifications, Executive Order 11246 or the regulations promulgated pursuant thereto.

6. In order for the nonworking training hours of apprentices and trainees to be counted in meeting the goals, such apprentices and trainees shall be employed by the contractor during the training period and the contractor shall have made a commitment to employ the apprentices and trainees at the completion of their training, subject to the availability of employment opportunities. Trainees shall be trained pursuant to training programs approved by the U.S. Department of Labor.

7. The contractor shall take specific affirmative actions to ensure equal employment opportunity. The evaluation of the contractor's compliance with these specifications shall be based upon its effort to achieve maximum results from its actions. The contractor shall document these efforts fully and shall implement affirmative action steps at least as extensive as the following:

a. Ensure and maintain a working environment free of harassment, intimidation, and coercion at all sites, and in all facilities at which the contractor, where possible, will assign two or more women to each construction project. The contractor shall specifically ensure that all foremen, superintendents, and other onsite supervisory personnel are aware of and carry out the contractor's obligation to maintain such a working environment, with specific attention to minority or female individuals working at such sites or in such facilities.

b. Establish and maintain a current list of minority and female recruitment sources, provide written notification to minority and female recruitment sources and to community organizations when the contractor or its unions have employment opportunities available, and maintain a record of the organizations' responses.

c. Maintain a current file of the names, addresses, and telephone numbers of each minority and female off-the-street applicant and minority or female referral from a union, a

recruitment source, or community organization and of what action was taken with respect to each such individual. If such individual was sent to the union hiring hall for referral and was not referred back to the contractor by the union or, if referred, not employed by the contractor, this shall be documented in the file with the reason therefore along with whatever additional actions the contractor may have taken.

d. Provide immediate written notification to the Director when the union or unions with which the contractor has collective bargaining agreement has not referred to the contractor a minority person or female sent by the contractor, or when the contractor has other information that the union referral process has impeded the contractor's efforts to meet its obligations.

e. Develop on-the-job training opportunities and/or participate in training programs for the area which expressly include minorities and women, including upgrading programs and apprenticeship and trainee programs relevant to the contractor's employment needs, especially those programs funded or approved by the Department of Labor. The contractor shall provide notice of these programs to the sources compiled under 7b above.

f. Disseminate the contractor's EEO policy by providing notice of the policy to unions and training programs and requesting their cooperation in assisting the contractor in meeting its EEO obligations; by including it in any policy manual and collective bargaining agreement; by publicizing it in the company newspaper, annual report, etc.; by specific review of the policy with all management personnel and with all minority and female employees at least once a year; and by posting the company EEO policy on bulletin boards accessible to all employees at each location where construction work is performed.

g. Review, at least annually, the company's EEO policy and affirmative action obligations under these specifications with all employees having any responsibility for hiring, assignment, layoff, termination, or other employment decisions including specific review of these items with onsite supervisory personnel such a superintendent, general foreman, etc., prior to the initiation of construction work at any job site. A written record shall be made and maintained identifying the time and place of these meetings, persons attending, subject matter discussed and disposition of the subject matter.

h. Disseminate the contractor's EEO policy externally by including it in any advertising in the news media, specifically including minority and female news media, and providing written notification to and discussing the contractor's EEO policy with other contractors and subcontractors with whom the contractor does or anticipates doing business.

i. Direct its recruitment efforts, both oral and written, to minority, female, and community organizations, to schools with minority and female students; and to minority and female recruitment and training organizations serving the contractor's recruitment area and employment needs. Not later than one month prior to the date for the acceptance of applications for apprenticeship or other training by any recruitment source, the contractor shall send written notification to organizations, such as the above, describing the openings, screening procedures, and tests to be used in the selection process.

j. Encourage present minority and female employees to recruit other minority persons and women and, where reasonable provide after school, summer, and vacation employment to minority and female youth both on the site and in other areas of a contractor's workforce.

k. Validate all tests and other selection requirements where there is an obligation to do so under 41 CFR Part 60-3.

l. Conduct, at least annually, an inventory and evaluation at least of all minority and female personnel, for promotional opportunities and encourage these employees to seek or to prepare for, through appropriate training, etc., such opportunities.

m. Ensure that seniority practices, job classifications, work assignments, and other personnel practices do not have a discriminatory effect by continually monitoring all personnel and employment related activities to ensure that the EEO policy and the contractor's obligations under these specifications are being carried out.

n. Ensure that all facilities and company activities are nonsegregated except that separate or single user toilet and necessary changing facilities shall be provided to assure privacy between the sexes.

o. Document and maintain a record of all solicitations of offers for subcontracts from minority and female construction contractors and suppliers, including circulation of solicitation to minority and female contractor associations and other business associations.

Conduct a review, at least annually, of all supervisor's adherence to and performance under the contractor's EEO policies and affirmative action obligations.

8. Contractors are encouraged to participate in voluntary associations which assist in fulfilling one or more of their affirmative action obligations (7a through p). The efforts of a contractor association, joint contractor union, contractor community, or other similar groups of which the contractor is a member and participant, may be asserted as fulfilling any one or more of its obligations under 7a through p of these specifications provided that the contractor actively participates in the group, makes every effort to assure that the group has a positive impact on the employment of minorities and women in the industry, ensures that the concrete benefits of the program are reflected in the contractor's minority and female workforce participation, makes a good faith effort to meet its individual goals and timetables, and can provide access to documentation which demonstrates the effectiveness of actions taken on behalf of the contractor. The obligation to comply, however, is the contractor's and failure of such a group to fulfill an obligation shall not be a defense for the contractor's noncompliance.

9. The contractor is required to provide equal employment opportunity and to take affirmative action for all minority groups, both male and female, and all women, both minority and nonminority. Consequently, if the particular group is employed in a substantially disparate manner (for example, even though the contractor has achieved its goals for women generally,) the contractor may be in violation of the Executive Order if a specific minority group of women is underutilized.

10. The contractor shall not use the goals and timetables or affirmative action standards to discriminate against any person because of race, color, religion, sex, or national origin.

11. The contractor shall not enter into any subcontract with any person or firm debarred from Government contracts pursuant to Executive Order 11246.

12. The contractor shall carry out such sanctions and penalties for violation of these specifications and of the Equal Opportunity Clause, including suspension, termination, and cancellation of existing subcontracts as may be imposed or ordered pursuant to Executive Order 11246, as amended, and its implementing regulations, by the Office of Federal Contract Compliance Programs. Any contractor who fails to carry out such sanctions and penalties shall be in violation of these specifications and Executive Order 11246, as amended.

13. The contractor, in fulfilling its obligations under these specifications, shall implement specific affirmative action steps, at least as extensive as those standards prescribed in paragraph 7 of these specifications, so as to achieve maximum results from its efforts to ensure equal employment opportunity. If the contractor fails to comply with the requirements of the Executive Order, the implementing regulations, or these specifications, the Director shall proceed in accordance with 41 CFR 60-4.8.

14. The contractor shall designate a responsible official to monitor all employment related activity to ensure that the company EEO policy is being carried out, to submit reports relating to the provisions hereof as may be required by the Government, and to keep records. Records shall at least include for each employee, the name, address, telephone number, construction trade, union affiliation if any, employee identification number when assigned, social security number, race, sex, status (e.g., mechanic, apprentice, trainee, helper, or laborer), dates of change in status, hours worked per week in the indicated trade, rate of pay, and locations at which the work was performed. Records shall be maintained in an easily understandable and retrievable form; however, to the degree that existing records satisfy this requirement, contractors shall not be required to maintain separate records.

15. Nothing herein provided shall be construed as a limitation upon the application of other laws which establish different standards of compliance or upon the application of requirements for the hiring of local or other area residents (e.g., those under the Public Works Employment Act of 1977 and the Community Development Block Grant Program).

Part G: CONTRACTUAL REQUIREMENTS PURSUANT TO CIVIL RIGHTS ACT OF 1964, TITLE VI

(49 CFR PART 21)

During the performance of this contract, the contractor, for itself, its assignees and successors in interest (hereinafter referred to as the "contractor") agrees as follows:

1. Compliance with Regulations. The contractor shall comply with the Regulations relative to nondiscrimination in federally assisted programs of the Department of Transportation (hereinafter "DOT") Title 49, Code of Federal Regulations, Part 21, as they may be amended from time to time (hereinafter referred to as the Regulations), which are herein incorporated by reference and made a part of this contract.

2. Nondiscrimination. The contractor, with regard to the work performed by it during the contract, shall not discriminate on the ground of race, color, or national origin in the selection and retention of subcontractors, including procurements of materials and leases of equipment.

The contractor shall not participate either directly or indirectly in the discrimination prohibited by section 21.5 of the Regulations, including employment practices when the contract covers a program set forth in Appendix B of the Regulations.

3. Solicitations for Subcontracts, Including Procurements of Materials and Equipment. In all solicitations either by competitive bidding or negotiation made by the contractor for work to be performed under a subcontract, including procurement of materials or leases of equipment, each potential subcontractor or supplier shall be notified by the contractor of the contractor's obligations under this contract and the Regulations relative to nondiscrimination on the grounds of race, color, or national origin.

4. Information and Reports. The contractor shall provide all information and reports required by the Regulations or directives issued pursuant thereto and shall permit access to its books, records, accounts, other sources of information, and its facilities as may be determined by the owner.

5. Sanctions for Noncompliance. In the event of the contractor's noncompliance with the nondiscrimination provisions of this contract, the owner shall impose such contract sanctions as it may determine to be appropriate, including but not limited to:

a. Withholding of payments to the contractor under the contract until the contractor complies, and/or

b. Cancellation, termination, or suspension of the contract, in whole or in part.

6. Incorporation of Provisions. The contractor shall include the provisions of paragraphs 1 through 5 in every subcontract, including procurements of materials and leases of equipment, unless exempt by the Regulations or directives issued pursuant thereto. The contractor shall take such action with respect to any subcontract or procurement as the owner may direct as a means of enforcing such provisions including sanctions for noncompliance.

Part H: TERMINATION OF CONTRACT
(49 CFR PART 18)

1. The owner may, by written notice, terminate this contract in whole or in part at any time, either for the owner's convenience or because of failure to fulfill the contract obligations. Upon receipt of such notice services shall be immediately discontinued (unless the notice directs otherwise) and all materials as may have been accumulated in performing this contract, whether completed or in progress, delivered to the owner.

2. If the termination is for the convenience of the owner, the equitable adjustment in the contract price shall be made, but no amount shall be allowed for anticipated profit on unperformed services.

3. If the termination is due to failure to fulfill the contractor's obligations, the owner may take over the work and prosecute the same to completion by contract or otherwise. In such case, the contractor shall be liable to the owner for any additional cost occasioned to the owner thereby.

4. If, after notice of termination for failure to fulfill contract obligations, it is determined that the contractor had not so failed, the termination shall be deemed to have been effected for the convenience of the owner. In such event, adjustment in the contract price shall be made as provided in paragraph 2 of this clause.

5. The right and remedies of the sponsor provided in this clause are in addition to any other rights and remedies provided by law or under this contract.

Part I: BUY AMERICAN: STEEL AND MANUFACTURED PRODUCTS FOR CONSTRUCTION CONTRACTS (Aviation Safety and Capacity Expansion Act of 1990)

(a) The Aviation Safety and Capacity Expansion Act of 1990 provides that preference be given to steel and manufactured products produced in the United States when funds are expended pursuant to a grant issued under the Airport Improvement Program. The following terms apply:

1. Steel and manufactured products. As used in this clause, steel and manufactured products include (1) steel produced in the United States or (2) a manufactured product produced in the United States, if the cost of its components mined, produced or manufactured in the United States exceeds 60 percent of the cost of all its components and final assembly has taken place in the United States. Components of foreign origin of the same class or kind as the products referred to in subparagraphs (b) (1) or (2) shall be treated as domestic.

2. Components. As used in this clause, components means those articles, materials, and supplies incorporated directly into steel and manufactured products.

3. Cost of Components. This means the cost for production of the components, exclusive of final assembly labor costs.

(b) The successful bidder will be required to assure that only domestic steel and manufactured products will be used by the Contractor, subcontractors material men, and suppliers in the performance of this contract, except those

(1) that the U. S. Department of Transportation has determined, under the Aviation Safety and Capacity Expansion Act of 1990, are not produced in the United States in sufficient and reasonably available quantities and of a satisfactory quality;

(2) that the U. S. Department of Transportation has determined, under the Aviation Safety and Capacity Expansion Act of 1990, that domestic preference would be inconsistent with the public interest; or

(3) that inclusion of domestic material will increase the cost of the overall project contract by more than 25 percent.

DISADVANTAGED BUSINESS ENTERPRISE CONTRACT PROVISIONS (49 CFR PART 23)

PART A

Policy. It is the policy of the Department of Transportation (DOT) that disadvantaged business enterprises as defined in 49 CFR Part 23 shall have the maximum opportunity to participate in the performance of contracts financed in whole or in part with Federal funds under this agreement. Consequently, the DBE requirements of 49 CFR Part 23 apply to this agreement.

DBE Obligation. The contractor agrees to ensure that disadvantaged business enterprises as defined in 49 CFR Part 23 have the maximum opportunity to participate in the performance of contracts and subcontracts financed in whole or in part with Federal funds provided under this agreement. In this regard all contractors shall take all necessary and reasonable steps in accordance with 49 CFR Part 23 to ensure that disadvantaged business enterprises have the maximum opportunity to compete for and perform contracts. Contractors shall not discriminate on the basis of race, color, national origin or sex in the award and performance of DOT-assisted contracts.

Compliance. All bidders, potential contractors or subcontractors for this DOT-assisted contract are hereby notified that failure to carry out the DOT policy and the DBE obligation, as set forth above, shall constitute a breach of contract which may result in termination of the contract or such other remedy as deemed appropriate by the owner.

Subcontract Clauses.

All bidders and potential contractors hereby assure that they will include the above clauses in all subcontracts which offers further subcontracting opportunities.

PART B

It is further understood and agreed:

The award procedure for this solicitation will include the selection criteria of 49 CFR Part 23.45(I) to ensure that prime contracts are awarded to competitors that meet Disadvantaged Business Enterprise (DBE) goals.

Notification is hereby given that DBE goals are established for this prime contract. The goal for firms owned and controlled by socially and economically disadvantaged individuals is eleven point twenty (11.20) percent of the dollar value of this contract.

After opening bids, the apparent successful bidder will be required to submit the names and addresses of the DBE firms that will participate in the contract along with a description of the work to be performed by each named firm and the dollar value for each contract (subcontract). If the responses do not clearly show DBE participation will meet the goals above, the apparent successful bidder must provide documentation clearly demonstrating, to the satisfaction of the

airport sponsor, that it made good faith efforts in attempting to do so and that meeting said goals is not reasonably possible. A bid that fails to meet these requirements will be considered non-responsive.

Agreements between bidder/proposer and a DBE in which the DBE promises not to provide sub-contracting quotations to other bidders/proposers are prohibited. All bidders and proposers shall make a good faith effort to replace a DBE subcontractor that is unable to perform successfully with another DBE subcontractor.

The bidder shall establish and maintain records and submit regular reports, as required, which will identify and assess progress in achieving DBE subcontract goals and other DBE affirmative action efforts.

BIDDERS INSTRUCTIONS AND CHECKLIST

1. Contract is being awarded on the total bid (Base Bid as shown on the first sheet of the (BID FORM) being submitted.

CHECKLIST

1. Bid forms.
2. Bid bond or bid security.
3. Acknowledge all addenda.
4. Contractor's name and license number on the outside of the envelope.
5. Proper labeling as bid for project on outside of the envelope.
6. Authorized signature of bidder on bid forms.
7. Bidder is advised to pay strict attention to bond requirements.

BIDDERS INSTRUCTIONS AND CHECKLIST

1) Contract is being awarded on the total bid (Base Bid, and alternate No. 1 if selected) being submitted.

2) a) Any proposal received after September 13th, 2018 will be returned unopened.

b) As a condition of the opening of a bid, the bid must be submitted and sealed in a plain envelope with the following listed information plainly written on the outside or face of the envelope:

i) Submitted to: (Name of Owner)

ii) for: (Name of the project and contract designation for which the bid is submitted.)

iii) Bid of: (Name of person or firm submitting the bid.)

iii) Insert: (Permanent address of the bidder)

v) Insert: (Post office box number or street address, and the city and state of the bidder.)

vi) Certification: For a bid where the total amount is in excess of Fifty Thousand Dollars ($50,000), the bidder must have a Certificate of Responsibility number shown on the outside of the sealed envelope containing the bid. For a bid where the total amount is not in excess of Fifty Thousand Dollars ($50,000), the bidder must have a statement signifying this that is shown on the outside of tl1e sealed envelope containing the bid.

c) If forwarded by mail, the sealed envelope containing the bid must be enclosed in another sealed envelope addressed to the owner.

d) The attention of prospective bidders is directed to all state fees and taxes required for the privilege of doing business within the state.

e) Any proposal received that does not comply with this provision will be returned unopened.

f) The name of the project is HATTIESBURG-BOBBY L. CHAIN AIRPORT, APRON RESTORATION PART I.

g) Each bid must be accompanied by a bid bond, a certified check or cashier's check for an amount equal to five percent (5%) of the total bid as a bid guarantee.

h) Successful bidders will be required to execute the standard form of "Contract Agreement" for construction, together with a I 00% performance bond and a 100% payment bond, within fifteen (15) days after formal award of the contract. The bonds shall be acceptable

to the owner and shall be executed by a company licensed to do business in the State of Mississippi. The bonds shall either be signed or countersigned by a Mississippi resident agent of the surety company.

i) The time allowed for completing this project is one hundred and twenty (120) calendar days, commencing with the date of the "Notice to Proceed." Failure to complete the work within the allowable contract time will result in the assessment of liquidated damages of one thousand dollars ($1,000.00) per calendar day after the expiration of contract time.

j) If the contractor should experience unforeseen delays due to causes beyond its control, i.e., receipt of materials, weather delays, etc., these time periods may be extended by the owner, based upon justification received by the engineer from the contractor, and the engineer's recommendation to the owner.

k) The bidder understands that the unit prices included on the proposal form as a part of its bid shall be held good and may not be altered or withdrawn for a period of sixty (60) calendar days after the scheduled closing time for receiving bids.

l) The owner's intent in performing this work is to repair existing drainage and improve safety area.

3) Bid Conditions, Disadvantaged Business Enterprise Program

a) The following bid conditions are applied to this Department of Transportation (DOT) assisted contract. Submission of a proposal by a prospective contractor shall constitute full acceptance of these bid conditions.

i) Definition. Disadvantaged Business Enterprise (DBE) as used in this contract shall have the same meaning as defined in Paragraph 23.62 of Subpart D to 49 CFR Part 23.

ii) Policy. It is the policy of DOT t hat disadvantaged business enterprises as defined in 49 CFR Part 23 shall have the maximum opportunity to participate in the performance of contracts and subcontracts financed in whole or in part with federal funds. Consequently the DBE requirements of 49 CFR Part 23 apply to this contract.

iii) DBE Obligation. The contractor agrees to ensure that disadvantaged business enterprises as defined in 49 CFR Part 23 have the maximum opportunity to participate in the performance of contracts and subcontracts financed in whole or in part with federal funds. In this regard all contractors shall take all necessary and reasonable steps in accordance with 49 CFR Part 23 to ensure that disadvantaged business enterprises have the maximum opportunity to compete for and perform contracts. Contractors shall not discriminate on the basis of race, color, national origin or sex in the award and performance of DOT assisted contracts.

iv) Compliance. All bidders, potential contractors, or subcontractors for this DOT-

assisted contract are hereby notified that failure to carry out the DOT policy and the DBE obligation, as set forth above, shall constitute a breach of contract that may result in termination of the contract or such other remedy as deemed appropriate by the owner.

v) Subcontract Clauses. All bidders and potential contractors hereby assure that they will include the above clauses in all subcontracts which offer further subcontracting opportunities.

vi) Contract Award. Bidders are hereby advised that meeting DBE subcontract goals or making a good faith effort to meet such goals are conditions of being awarded this DOT-assisted contract. The owner proposes to award the contract to the lowest responsible bidder submitting a reasonable bid provided he has met the goals for DBE participation or, if failing to meet the goals, it has made good faith effort to meet the established goals for DB E participation. The bidder is advised that the owner has sole authority to determine if the bidder has made sufficient effort toward meeting DBE goals to quality) for the contract award. The owner reserves the right to reject any or all bids submitted.

vii) Subcontract Goals. The attainment of goals established for these contracts are to be measured as a percentage of the total dollar value of the contract. The goals established for this contract is eleven point twenty percent (11.20%) (based on historical and availability references of minorities, females, and other) to be performed by the DBE's.

viii) Available DBE's. The owner has on file a DBE program which has been approved by the Federal Aviation Administration. This program contains a listing of known DBE's that have been certified by a sponsor of one or more DOT programs. Bidders are encouraged to inspect this program to assist in locating DBE's for the work. Other DBE's may be certified and added to the list in accordance with the owner's approved DBE program. Credit toward the DBE goals will not be counted unless the DBE to be used has been certified.

ix) Contractor's Required Submission. The owner requires the submission of the following "Non-DBE Subcontracts" information within ten (10) days after the bid opening and prior to award o f the contract under this solicitation. Certain other DBE information may also be required.

NON-DBE SUBCONTRACTS

Non-DBE Subcontractors Names and Addresses	Subcontract Work Item	Dollar Value of Subcontract Work

Total Dollar Value of Sub Contract Work _____

Total Dollar Value of Basic Bid _____

Percent of Total _____%

WOMEN SUBCONTRACTS

Women Subcontractors Names and Addresses	Subcontract Work Item	Dollar Value of Subcontract Work

Total Dollar Value of Subcontract Work _____

Total Dollar Value of Basic Bid _____

Percent of Total _____%

DBE SUBCONTRACTS

DBE Subcontractors Names and Addresses	Subcontract Work Item	Dollar Value of Subcontract Work

Total Dollar Value of Subcontract Work _____

Total Dollar Value of Basic Bid _____

Percent of Total _____

x) Contractor Assurance. The bidder hereby assures that he will meet one of the following, as appropriate:

(1) The DBE participation goal as established in paragraph 2(a) vii above.

(2) The DBE participation percentage as shown in paragraph 2(a) vii, which was submitted as a condition of contract award.

b) Agreements between bidder/proposer and DBE in which the DBE promises not to provide subcontracting quotations to other bidders/proposers are prohibited. The bidder shall make a good faith effort to replace a DBE subcontract that is unable to perform successfully with another DBE subcontractor. Substitution must be coordinated and approved by the owner. The bidder shall establish and maintain records and submit regular reports, as required, that will identify and assess progress in achieving DBE subcontract goals and other DBE affirmative action efforts.

c) If the contractor fails to meet the contract goals established in paragraph 2(a) vii above, the following information must be submitted prior to contract award to assist the owner in determining whether or not the contractor made acceptable good faith efforts to meet the contract goal. This information (when applicable) as well as the DBE information should be submitted as specified in paragraph 2b above.

d) Suggested guidance for use in determining if good faith efforts were made by a contractor is included in Appendix A to 49 CFR Part 23, Subpart 23.45(h), revised as of April 27, 1981.

e) A list of the efforts that a contractor may make and the owner may use in making a determination as to the acceptability of a contractor's efforts to meet the goal as included in Appendix A are as follows:

i) Whether the contractor attended any pre-solicitation or pre-bid meetings that were scheduled by the recipient to inform DBE's of contracting and subcontracting opportunities;

ii) Whether the contractor advertised in general circulation, trade association, and minority-focus media concerning the subcontracting opportunities;

iii) Whether the contractor provided written notice to a reasonable number of specific DBE's that their interest in the contract was being solicited in sufficient time to allow the DBE's to participate effectively;

iv) Whether the contractor followed up initial solicitations of interest by contacting

DBE's to determine with certainty whether the DBE's were interested;

v) Whether the contractor selected portions of work to be performed by DBE's in order to increase the likelihood of meeting the DBE goal (including breaking down contracts into economically feasible units to facilitate DBE participation, where appropriate);

vi) Whether the contractor provided interested DBE's with adequate information about the plans, specifications, and requirements of the contract;

vii) Whether the contractor negotiated in good faith with interested DBE's, not rejecting DBE's as unqualified without sound reasons based on a thorough investigation of their capabilities;

viii) Whether the contractor made efforts to assist interested DBE's in obtaining bonding, lines of credit, or insurance required by the recipient of contractor; and

ix) Whether the contractor effectively used the services of available minority community organizations; minority contractors' groups; local and state Federal Minority Business Assistance Offices; and other organizations that provide assistance in the recruitment and placement of DBE's.

NOTE: The nine items set forth above are merely suggested criteria and the owner may specify that you submit information on certain other actions a contractor took to secure a DBE participation in an effort to meet the goals. A contractor may also submit to the owner other information on efforts to meet the goals.

CHECKLIST

1. Bid forms.
2. Bid bond or bid security.
3. Acknowledge all agenda.
4. Contractor's name and license number on the outside of the envelope.
5. Proper labeling as bid for project on outside of the envelope.
6. Delivered or addressed to the Director of Purchasing.
7. Authorized signature of bidder on bid forms.
8. Bidder is advised to pay strict attention to bond requirements.

SECTION D: BID INFORMATION

BID FORM

DATE : _____ , 2018

NAME OF BIDDER:

MISSISSIPPI CONTRACTOR LICENSE NO.

City Clerk's Office
City of Hattiesburg
200 Forrest Street
Hattiesburg, MS 39401

Gentlemen:

The undersigned, being a qualified bidder in compliance with your Advertisement for Bids for the construction of:

HATTIESBURG-BOBBY L. CHAIN MUNICIPAL AIRPORT
APRON RESTORATION PARTI

AIP No. 3-28-0031-0026-2018
for the
CITY OF HATTIESBURG

Having examined the plans and specifications with related documents, and having examined the sites of the proposed work, hereby proposes to construct the project in accordance with the Contract Documents, within the time set forth therein, and at the prices stated hereinafter. These prices are to cover all expenses incurred in performing the work required under the Contract Documents, of which this Bid is a part. This "unit price" Bid shall be invoiced based on completed installed quantities.

The undersigned Bidder agrees to fully complete the Project within one hundred twenty (120) calendar days from the date of the "Order to Proceed". The Bidder agrees to pay as liquidated damages, the sum of One Thousand Dollars ($1,000.00) for each consecutive calendar day thereafter. The Bidder further agrees that this bid shall be good and may not be withdrawn for a period of sixty (60) calendar days after the scheduled closing time for receiving bids. In the event the Owner issues the Notice of Award during this period, the Bid accepted shall continue to remain binding until the successful Bidder delivers his executed Contract Documents to the Owner.

The Bidder acknowledges receipt of, and makes a part of this proposal the following addenda: _

The Bidder's attention is directed to the "Instructions to Bidders" contained in these contract documents. It shall be the Bidder's responsibility to review and comply with these instructions.

The bidder shall complete the following statements by checking the appropriate space.

The bidder has ____ has not ____ participated in a previous contract subject to the equal opportunity clause prescribed by Executive Order 10925, or Executive Order 11114, or Executive Order 11246.

The bidder has ____ has not ____ submitted all compliance reports in connection with any such contract due under the applicable filing requirements; and that representations indicating submission of required compliance reports signed by proposed subcontractors will be obtained prior to award of subcontracts.

If the bidder has participated in a previous contract subject to the equal opportunity clause and has not submitted compliance reports due under applicable filing requirements, the Bidder shall submit a compliance report on Standard Form 100, "Employee Information Report EEO-1" prior to the award of contract.

Bidder will execute the formal contract within ten (10) days after original date of Owner's Notice of Award and will deliver a Surety Bond or Bonds for the faithful performance of the Contract, per these drawings and specifications. A certificate of insurance shall also be delivered.

Bid Security is attached without endorsement, in the sum of five percent (5%) of the total

of the Base Bid Schedule

($ _____) dollars

and of Additive Alternate No.1 Schedule

($_____) dollars

is to become the property of the Owner in the event the Contract and Bond are not executed within the time above set forth.

(SEAL) If bid is by a corporation

Respectfully submitted,

Bidder

By:

Title

_____ Address

BID FORM

BID SCHEDULE – BASE BID
Hattiesburg-Bobby L. Chain Municipal Airport
Apron Restoration Part I
AIP No. 3-28-0031-0026-2018

Bid Item Number	Description	Approximate Quantity	Unit of Measure	Unit Price in Numbers	Unit Price in Words (Ink or Typed)
P-401-8.1a	Bituminous Surface Course	776	TON		_____ Dollars _____ Cents
P-403-8.1a	Bituminous Leveling Course	920	TON		_____ Dollars _____ Cents
P-501	Portland Cement Concrete Pavement – 6 1/2" thick	14000	S.Y.		_____ Dollars _____ Cents
P-603	Bituminous Tack Coat	1140	GAL		_____ Dollars _____ Cents
P-620-5.1(A)	Runway and Taxiway Painting	500	S.F.		_____ Dollars _____ Cents
D-701-5.1(E)	15" Poly (Vinyl Chloride) Ribbed Drain Pipe	589	L.F.		_____ Dollars _____ Cents

Contractor Note: Unit prices include all costs required to complete construction, ready for operation in accordance with contract documents, including "mobilization and demobilization" costs. The costs of work not designated to be paid for under a specific item, shall be prorated over applicable pay items. Separate measurements of work for payment will not be made unless designated herein.

BID FORM

BID SCHEDULE – BASE BID
Hattiesburg-Bobby L. Chain Municipal Airport
Apron Restoration Part I
AIP No. 3-28-0031-0026-2018

Bid Item Number	Description	Approximate Quantity	Unit of Measure	Unit Price in Numbers	Unit Price in Words (Ink or Typed)
D-751	Rebuild Inlet	1	EACH		_____ Dollars _____ Cents
T-901	Turfing (Seeding, Fertilizing and Mulching)	1200	S.Y.		_____ Dollars _____ Cents
S001	Mobilization	1	LUMP SUM		_____ Dollars _____ Cents
S003	Construction Layout	1	LUMP SUM		_____ Dollars _____ Cents
S008	Pre-sloped Channel Drain	510	L.F.		_____ Dollars _____ Cents
					_____ Dollars _____ Cents

Contractor Note: Unit prices include all costs required to complete construction, ready for operation in accordance with contract documents, including "mobilization and demobilization" costs. The costs of work not designated to be paid for under a specific item, shall be prorated over applicable pay items. Separate measurements of work for payment will not be made unless designated herein.

BID FORM

BID SCHEDULE – ALTERNATE NO. 1
Hattiesburg-Bobby L. Chain Municipal Airport
Apron Restoration Part I
AIP No. 3-28-0031-0026-2018

Bid Item Number	Description	Approximate Quantity	Unit of Measure	Unit Price in Numbers	Unit Price in Words (Ink or Typed)
P-401-8.1a	Bituminous Surface Course	538	TON		_____ Dollars _____ Cents
P-403-8.1a	Bituminous Leveling Course	38	TON		_____ Dollars _____ Cents
P-501	Portland Cement Concrete Pavement – 6 1/2" thick	4500	S.Y.		_____ Dollars _____ Cents
P-603	Bituminous Tack Coat	488	GAL		_____ Dollars _____ Cents
P-620-5.1(A)	Runway and Taxiway Painting	2000	S.F.		_____ Dollars _____ Cents
					_____ Dollars _____ Cents

SHEETS 43 thru 47 NOTE USED

BID BOND

KNOW ALL MEN BY THESE PRESENTS, that we, the undersigned,

_____ as Principal, and

as Surety, are hereby held and firmly bound unto

as OWNER in the penal sum of

for the payment of which, well and truly to be made, we hereby jointly and severally bind ourselves, successors and assigns. Signed this _____ day of _____, _____. The Condition of the above obligation is such that whereas the Principal has submitted to a certain BID, attached hereto and hereby made a part hereof to enter into a contract in writing, for the:

HATTIESBURG-BOBBY L. CHAIN MUNICIPAL AIRPORT
APRON RESTORATION PART I

A.I.P Project No. 3-28-0031-0026-2018
for the
CITY OF HATTIESBURG

NOW, THEREFORE,

a) If said BID shall be rejected, or

b) If said BID shall be accepted and the Principal shall execute and deliver a contract in the Form of Contract attached hereto (properly completed in accordance with said BID) and shall furnish a BOND for his faithful performance of said contract, and for the payment of all persons performing labor or furnishing materials in connection therewith, and shall in all other respects perform the agreement created by the acceptance of said BID, then this obligation shall be void, otherwise the same shall remain in force and effect; it being expressly understood and agreed that the liability of the Surety for any and all claims hereunder shall, in no event, exceed the penal amount of this obligation as herein stated.

The Surety, for value received hereby stipulates and agrees that the obligations of said Surety and its BOND shall be in no way impaired or affected by any extension of the time within which the OWNER may accept such BID; and said Surety does hereby waive notice of any such extension.

IN WITNESS WHEREOF, The Principal and the Surety have hereunto set their hands and seals, and such of them as are corporations have caused their corporate seals to be hereto affixed and these presents to be signed by their proper officers, the day and year first set forth above.

_____
Principal

_____ By: _____
Surety

IMPORTANT NOTE: Surety bonds shall be procured according to Mississippi State Law. Any surety bond written for a public works project shall be written by a surety or insurance company currently on the U.S. Department of the Treasury Financial Management Service list of approved bonding companies which is published annually in the Federal Register, or by a Mississippi domiciled insurance company with at least an A-rating in the latest printing of the A.M. Best's Key Rating Guide to write individual bonds up to ten percent of policyholders' surplus as shown in the A.M. Best's Key Rating Guide or by an insurance company that is either domiciled in Mississippi or owned by Mississippi residents and is licensed to write surety bonds.

AFFIDAVIT

STATE OF MISSISSIPPI

COUNTY OF _____

BEFORE ME, the undersigned authority, personally came and appeared,

_____, who after first being sworn, deposes and says: that

he is _____ (a partner of the firm of, etc.) _____ .

The party making the foregoing Proposal or bid; that such bid is genuine and not collusive or a sham; that said bidder has not colluded, conspired, connived, or agreed directly or indirectly, with any bidder or person to put in a sham bid, or that such other person shall refrain from bidding, and has not in any manner, directly or indirectly, sought by agreement, or collusion, or communication or conference with any person to fix the bid price of affiant or any other bidder, or to fix any overhead profit or cost element of said bid price or that of any other bidder, or to secure any advantage against THE CITY OF HATTIESBURG, State of Mississippi, Owner, or any person interested in the proposed Contract; and that all statements contained in said proposal or bid, or the contents thereof, or divulged information or data relative hereto to any association or any member or agent thereof, are true.

_____

SWORN TO AND SUBSCRIBED

BEFORE ME ON THIS _____ DAY OF _____ ,

20____.

_____
(Notary Public)

My commission expires _____ .

CERTIFICATION REGARDING DEBARMENT, SUSPENSION, INELIGIBILITY, AND VOLUNTARY EXCLUSION -- LOWER TIER COVERED TRANSACTIONS

This certificate is required by the regulations implementing Executive Order 12549, Debarment and Suspension, 49 CFR Part 29.

1. The prospective lower tier participant certifies, by submissions of this proposal, that neither it nor its principals is presently debarred, suspended, proposed for debarment, declared ineligible, or voluntarily excluded from participation in this transaction by any Federal department or agency.

2. Where the prospective lower tier participant is unable to certify to any of the statements in this certification, such prospective participant shall attach an explanation to this proposal.

_____

Organization Name *Project Name*

_____

Authorized Representative *Title*

_____

Signature *Date*

ELIGIBILITY QUESTIONNAIRE

NAME:

BUSINESS ADDRESS:

FEDERAL IDENTIFICATION NUMBER:

NAMES OF PRINCIPALS (Officers, Directors, Partners or Owners):

Has the corporation or any principal -

1. Been convicted or had a civil judgment against it involving fraud or any criminal offense in connection with the obtaining or attempt to obtain a public or private contract? If so, please explain in detail.

2. Been convicted or had a civil judgment against it concerning the violation of any federal or state antitrust statute. If so, please explain in detail.

3. Been convicted or had a civil judgment against it concerning the commission of any embezzlement, theft, forgery, bribing, falsification or destruction of records, making false statements, receiving stolen property, making false claims, or obstruction of justice. If so, please explain in detail.

4. Been convicted or had a civil judgment against it involving offenses indicating a lack of business integrity. If so, please explain in detail.

5. Has the corporation violated any public contract or transaction through:

   a. Willful failure to perform;
   b. Unsatisfactory performance;
   c. Willful violation of any statute or regulation.

   If so, please explain in detail.

6. Has the corporation or any principal been debarred or suspended from transactions with any agency of the U.S. Government, state of Mississippi or any other state? If so, please explain in detail.

7. Has the corporation willfully done business with any person or corporation that it knows has been debarred or suspended from federal or state transactions. If so, please explain in detail.

8. Has the corporation failed to pay substantial debt to the United States or any of its agencies? If so, please explain in detail.

9. Has the corporation ever entered into a voluntary exclusion from transactions with the United States or its agencies? If so, please explain in detail.

The undersigned authorized corporate representative, partner, or owner avers that the information supplied herein is true and correct and that the assertions are of the essence of the acceptance of a bid. If any information is willfully withheld or answered falsely, the City of Hattiesburg may declare the contract breached.

_____, Mississippi this _____ day of _____, 20____

Authorized Representative

ACKNOWLEDGMENT OF CONTINUING OBLIGATION TO INFORM

The undersigned authorized representative of the bidder acknowledges that he understands that the bidder has the continuing obligation to inform the City of Hattiesburg of any matters concerning its eligibility and specifically any matters set forth in the Eligibility Questionnaire. Failure to inform shall be the basis for the City to declare the contract breached.

_____, Mississippi this _____ day of _____, 20

Authorized Representative

SECTION E: CONTRACT

THIS AGREEMENT, made this _____ day of _____, 20 ____, State of Mississippi, hereinafter called "Owner" and

_____,

hereinafter called the "Contractor".

WITNESSETH THAT, the Owner and Contractor do mutually agree as follows:

1. In consideration of the price for the work herein specified in the bid proposal to be paid by the Owner to the Contractor at the time and in a manner hereinafter provided, the Contractor does hereby agree to construct complete in every detail as follows:

HATTIESBURG-BOBBY L. CHAIN MUNICIPAL AIRPORT
APRON RESTORATION PART I

A.I.P Project No. 3-28-0031-0026-2018
for the
CITY OF HATTIESBURG

in compliance with the advertisement of Bids, Proposal Form, Contract, Performance Bond, General Provisions, Specifications, Plans, and Addenda.

2. This price shall include the cost and expense to furnish all materials, supplies, machinery, equipment, tools, superintendence, labor, insurance, transportation, and other accessories and services necessary to complete this project, in accordance with the Contract Documents.

3. The Contractor shall commence work under this Contract within ten (10) days from the date of the written "Order to Proceed" issued by the Owner. The Contractor shall complete all work under the Contract within one hundred twenty (120) calendar days from the date of the "Order to Proceed".

The Owner has determined, and the Contractor agrees, that the liquidated damages for a delay in completion of this Contract will be One Thousand Dollars ($1,000.00) per working day in excess of the stated time of completion.

4. That upon satisfactory completion of the work and approval by the Engineer, the Owner will issue a written acceptance of the work to the Contractor, who will immediately thereafter file same with the Recorder of Mortgages in County.

5. A retainage of ten percent (10%) shall be withheld from each progress payment. Upon successful clearance of the lien, the Contractor shall submit a final invoice, with the clear lien certificate, for payment by the Owner in accordance with standard payment procedures established by the City of Hattiesburg.

6. The Owner agrees to pay the Contractor for the performance of the Contract as provided in the Specifications, and to make monthly payments on account thereof as provided in the General conditions. The contract amount, as presented in bid by Contractor is $ _____ or _____ (in words).

IN WITNESS WHEREOF, the parties hereto have caused this Agreement to be executed in three (3) original counterparts on the day and year first herein above written.

WITNESSES:

Contractor

_____

Signature

_____

Title

WITNESSES:

Owner

_____

Signature

_____

Title

SECTION F: PERFORMANCE AND PAYMENT BOND

KNOW ALL MEN BY THESE PRESENTS: That we (1) *

and (2) * _____ hereinafter called "Principal" and (3) *

a Surety Company authorized to do and doing business in the State of Mississippi, hereinafter called "Surety" are held and firmly bound unto the City of Hattiesburg, hereinafter called "Owner" in penal sums of _____dollars ($_____)

Performance Bond and _____ dollars ($ _____) Payment Bond in lawful money of the United States, for the payment of which sum well and truly to be made, we bind ourselves, our heirs, executors, administrators, jointly and severally, firmly by these presents.

THE CONDITION OF THIS OBLIGATION is such that, whereas, the Principal entered into a certain contract with the Owner dated the _____ day of _____ , 20 _____ , a copy of which is hereto attached and made a part hereof for the furnishing of:

HATTIESBURG-BOBBY L. CHAIN MUNICIPAL AIRPORT
APRON RESTORATION PART I

A.I.P Project No. 3-28-0031-0026-2018
for the
CITY OF HATTIESBURG

NOW, THEREFORE, if the Principal shall well, truly and faithfully perform its duties, all the undertakings, covenants, terms, conditions and agreements of said contract during the original term thereof which may be granted by the owner, with or without notice to the Surety, and if he shall satisfy all claims and demands incurred under such contract, and shall fully indemnify and save harmless the Owner from all costs and damages which it may suffer by reason of failure to do so, and shall reimburse and repay the Owner all outlay and expense which the Owner may incur in making good any default, and shall promptly make payment to all persons, firms,

subcontractors, and corporations furnishing materials for or performing labor in the prosecution of the work provided for in such contract, and any authorized extension or modification thereof, including all amounts due for materials, lubricants, oil, gasoline, coal and coke, repairs on machinery, equipment, and tools, consumed or used in connection with the prosecution of such work, and all insurance premiums on said work whether by subcontractor or otherwise, then this obligation shall be void; otherwise to remain in full force and effect.

PROVIDED, FURTHER, that the said Surety, for value received hereby stipulates and agrees that no change, extension of time, alterations or addition to the terms of the contract or to the work to be performed there under or the specifications accompanying the same shall in anyway affect its obligation on this bond, and it does hereby waive notice of any such change, extension of time, alteration or addition to the terms of the contract or to the work of the Specifications.

PROVIDED, FURTHER, that no final settlement between the Owner and the Contractor shall abridge the right of any beneficiary hereunder, whose claim may be unsatisfied.

IN WITNESS WHEREOF, this instrument is executed in _____ counterparts each one of which shall be deemed an original, this the _____ day of _____ , 20 _____ .

ATTEST:

_____
(Principal Secretary)

Principal

BY:

_____
Witness as to Principal

_____
Address

Address

ATTEST:

(SEAL)

_____
(Surety) Secretary

Surety

BY:

_____
Attorney-in-Fact

Witness as to Surety

_____
Address

Address

NOTE: DATE OF BOND MUST NOT BE PRIOR TO DATE OF AGREEMENT.

* 1. Correct name of Contractor.

* 2. A Corporation, a Partnership, or an Individual, as case may be.

* 3. Correct name of Surety.

NOTE: Contractor shall furnish performance and payment bonds as a security for the faithful performance and payment of all his obligations under the Contract Documents. These bonds shall be in amounts at least equal to the Contract Price, and (except as otherwise provided) in such form and with such sureties as are licensed to conduct business in the State where the Project is located and are named in the current list of "Surety Companies Acceptable on Federal Bonds" as published in the Federal Register by the Audit Staff Bureau of Accounts, U.S. Treasury Department, or by a Mississippi domiciled insurance company with at least an A rating in the latest printing of A.M. Best's Key Rating Guide and in accordance with Mississippi R.S. 38:2219.

SECTION G: CERTIFICATE AND RELEASE

FROM:

(Name of Contractor)

TO: City Council, City of Hattiesburg, Mississippi

RE: Contract entered into on the _____ day of _____ , _____ ,

between the City of Hattiesburg, Mississippi and

(Name of Contractor)

of _____ , _____
(City) *(State)*

HATTIESBURG-BOBBY L. CHAIN MUNICIPAL AIRPORT
APRON RESTORATION PART I

A.I.P Project No. 3-28-0031-0026-2018
for the
CITY OF HATTIESBURG

KNOW ALL MEN BY THESE PRESENTS:

A. The undersigned hereby certified that there are no outstanding claims of laborers, material, men, subcontractors or others arising out of the performance of this Contract, which might be asserted against the City, represented by the Commission Council, and the undersigned will agree that in the event of the assertion of any such claims against the City represented by the Commission Council, the undersigned will indemnify and save harmless the City from any such claims.

B. That the undersigned hereby acknowledges receipt from the City of all sums payable to the undersigned by the City under or pursuant to the above mentioned contract, with the following exceptions:

(List all exceptions here. If none, state "none".)

C. The undersigned further certifies and acknowledges that the City has duly performed and fulfilled all the terms, provisions and conditions to be performed or fulfilled under or pursuant to said Contract (with the exceptions as noted above).

D. That the undersigned, except as regard items listed in paragraph "B" in consideration of the sum of $1 paid to the undersigned, receipt whereof is hereby acknowledged, does hereby release the City from all claims arising under or by virtue of said Contract.

IN WITNESS WHEREOF, the undersigned has signed and sealant

this instrument this _____ day of _____ , 20 _____ .

_____ *(Seal)*

_____ , being first duly sworn on oath, deposes and says first, that he is the _____ of *(Title)* _____ , second, that he had read the

(Name of Company)

foregoing certificate by him subscribed as _____ of
(Title)

the _____ .
(Name of Company)

The matters and things stated therein are, to the best of his knowledge and belief, true.

(Name)

Subscribed and sworn to before me this _____ day of _____ , 20 _____ .

SECTION H: SPECIAL PROVISIONS

H-01. NAME OF PROJECT. The project shall be known as

HATTIESBURG-BOBBY L. CHAIN MUNICIPAL AIRPORT
APRON RESTORATION PART I

A.I.P Project No. 3-28-0031-0026-2018
for the
CITY OF HATTIESBURG

H-02. OWNER. The Owner is the City of Hattiesburg, Mississippi represented by its Mayor, domiciled in the City Hall of Hattiesburg, Mississippi.

H-03. LOCATION. The project is located approximately eight miles south east of downtown Hattiesburg, Mississippi.

H-04. SOURCE OF FUNDS. Owner's Funds for construction have been provided by proceeds from airport revenues.

H-05. ACCESSIBILITY. Access to the airport site may be gained by traveling south on US Highway 49, turn at its intersection with JM Tatum Industrial Drive and continue to Academy Drive.

H-06. DOCUMENTS FORMING THE CONTRACT. The documents forming the contract documents include Contract Documents and Specifications for HATTIESBURG-BOBBY L. CHAIN MUNICIPAL AIRPORT APRON RESTORATION PART I A.I.P Project No. 3-28-0031-0026-2018 for the CITY OF HATTIESBURG

H-07. SEEDING. The type of seed and rate of application shall be in accordance with the applicable portions of the current Specifications of Advisory Circular(AC) 150/5370-10A , Standards for Specifying Construction of Airports, Part X, as modified by the Field Engineer.

H-08. AIRPORT OPERATIONS. The Contractor shall coordinate his work so as to offer the least interference with airport operations and he shall cooperate with the airport management at all times in regards to safety regulations. When the location and nature of the construction process requires that the Contractor's vehicles be routed along or across active runways or taxiways, traffic movements will be coordinated with the airport manager or engineer. See REQUIREMENTS OF CONTRACTOR'S VEHICLES hereinafter. **Portable, lighted, barricades shall be furnished by the Contractor as required.**

Throughout the duration of the contract, **NO** equipment or objects projecting above ground will be permitted any closer than two hundred fifty of the centerline of the runway. Equipment may be parked near the work sites provided the above clearance requirements are maintained.

H-09. ACCESS. The Contractor's access route to staging areas and areas where work is to be performed is shown on the construction sequence plan. Maintenance of the route is required and shall include sweeping as required. Existing roads or pavements which are damaged by the Contractor's vehicles during construction shall be repaired at no additional cost to the Owner.

H-10. SCHEDULING WORK. The successful bidder shall furnish a proposed work schedule at the Pre-construction Conference. See paragraph H-18 for work phases.

During night operations the Contractor shall provide lighting as required for construction. Separate payment will not be made for lighting expenses.

H-11. OFFICE SPACE FOR INSPECTOR. Office space for the inspector will not be required.

H-12. LABORATORY TESTS. The Owner will employ the services of a Commercial Laboratory for the purpose of sampling and testing construction materials. The Contractor shall furnish materials for sampling at his expense.
Compaction and gradation tests which fail to comply with requirements of the plans and specifications shall be charged to the Contractor. The Engineer shall supervise all testing and tests performed without his knowledge or approval shall be paid for by the Contractor regardless of failing or passing.

H-13. RECORDING DOCUMENTS. The Contractor shall file on record at the Forrest County Courthouse, the construction contract and letter of acceptance of the final work. This will be considered as subsidiary obligation.

H-14. PROTECTION OF CABLES, CONTROLS, NAVAIDS & WEATHER BUREAU. The Contractor is hereby informed that there are installed on the airport FAA NAVAIDS: including, without limitation, electric cables and controls relating to such NAVAIDS and facilities, and other electric power cables serving other facilities. Such NAVAIDS, and other facilities, and electric cables must be fully protected during the entire construction time. Work under this contract can be accomplished in the vicinity of these facilities and cables only at approved periods of time. Approval is subject to withdrawal at any time because of changes in the weather, emergency conditions on the existing airfield areas, anticipation of emergency conditions, and for any other reason determined by the Engineers acting under the orders and instructions of the airport management and/or the designated FAA representative. Any instructions to this Contractor to clear any given area, at any time, by the Engineers or the airport management (by radio or other means) shall be immediately executed. Construction work will be commenced in the cleared area only when additional instructions are issued by the proper authorities.

The Contractor shall be responsible for the protection of all buried cables and utilities shown on the plans or subsequently located on the job site by the Engineers.

Power and control cables leading to and from any FAA NAVAIDS, Weather Bureau and other facilities, will be marked in the field by the Engineers for the information of the Contractor,

before any work in their general vicinity is started. Thereafter, through the entire time of this construction they shall be protected from any possible damage, including crossing with unauthorized equipment.

The Contractor shall immediately repair, with equivalent material by skilled workmen, any underground cables serving FAA NAVAIDS, Weather Bureau and other airport facilities, which are damaged by his workmen, equipment, or work. Prior approval of the FAA must be obtained for the materials, workmen, time of day or night, method of repairs, and for any temporary or permanent repairs the Contractor proposes to make to any FAA NAVAIDS and facilities damaged by the Contractor. Prior approval of the Engineer must be obtained for the materials, workmen, time of day or night, and for the method of repairs for any temporary or permanent repairs the Contractor proposes to make to any other airport facilities and cables damaged by this Contractor.

H-15. INSURANCE REQUIREMENTS.

1. The CONTRACTOR shall purchase and maintain such insurance as will protect it from claims set forth below which may arise out of, or result from, the CONTRACTOR'S execution of the WORK, whether such execution be by the CONTRACTOR, any SUBCONTRACTOR, or by anyone directly or indirectly employed by any of them, or by anyone for whose acts any of them may be liable:

    a. Claims under workmen's compensation, disability benefit and other similar employee benefit acts;

    b. Claims for damages because of bodily injury, occupational sickness or disease, or death of employees;

    c. Claims for damages because of bodily injury, sickness or disease, or death of any person other than employees;

    d. Claims for damages insured by usual personal injury liability coverage which are sustained (1) by any person as result of an offense directly or indirectly related to the employment of such person by the CONTRACTOR, or (2) by any other person; and

    e. Claims for damages because of injury to or destruction of tangible property, including loss of use resulting there from.

2. Certificates of Insurance acceptable to the OWNER shall be filed with the OWNER prior to commencement of the WORK. These Certificates shall contain a provision that coverage afforded under the policies will not be canceled unless at least fifteen (15) days prior WRITTEN NOTICE has been given to the OWNER.

3. The CONTRACTOR shall procure and maintain, at the CONTRACTOR'S own expense, during the CONTRACT TIME, Liability insurance as hereinafter specified;

   a. CONTRACTOR'S General Public Liability and Property Damage Insurance including vehicle coverage issued to the CONTRACTOR and protecting the CONTRACTOR from all claims for personal injury, including death, and all claims for destruction of or damage to property, arising out of or in connection with any operations under the CONTRACT DOCUMENTS, whether such operations be by the CONTRACTOR or by any SUBCONTRACTOR employed by the CONTRACTOR or anyone directly or indirectly employed by the CONTRACTOR or by a SUBCONTRACTOR employed by the CONTRACTOR.

Insurance Requirements

The Contractor shall furnish the following along with Bonds and Contract Documents sent to the City for execution:

Certificates of Insurance in companies doing business in Mississippi and acceptable to the County covering:

Statutory Worker's Compensation Insurance;

Comprehensive Liability Insurance covering all operations and automobiles:

Comprehensive General Liability: $5,000,000 combined single limit per occurrence for bodily injury, personal injury, and property damage.

Automobile Liability: $1,000,000 combined single limit per accident for bodily injury and property damage.

Certificates of Insurance must be executed in accordance with the following provisions:

Certificates to contain policy number, policy limits and policy expiration dates of all policies issued in accordance with this Contract;

Certificates to contain the location and operations to which the insurance applies;

Certificates to contain Contractor's protective coverage for any Subcontractor's operations;

Certifications to contain Contractor's Contractual Insurance coverage;

Certificates are to be **issued** to:
Mayor and City Council
City of Hattiesburg
200 Forrest Street
Hattiesburg, MS 39401

The Contractor shall be wholly responsible for securing certificates of insurance coverage as set forth above from all Subcontractors who are engaged in this Work.

The Contractor agrees to carry statutory Workers' Compensation Insurance and to have all Subcontractors likewise carry statutory Workers' Compensation Insurance.

The City, its officials and staff shall be named as additional insureds with right of notice in the policy.

a. The CONTRACTOR shall acquire and maintain, if applicable, Fire and Extended Coverage insurance upon the PROJECT to the full insurable value thereof for the benefit of the OWNER, the CONTRACTOR, and SUBCONTRACTORS as their interest may appear. This provision shall in no way release the CONTRACTOR or CONTRACTOR'S Surety from obligations under the CONTRACT DOCUMENTS to fully complete the PROJECT.

4. The CONTRACTOR shall procure and maintain, at the CONTRACTOR'S own expense during the CONTRACT TIME, in accordance with the provisions of the laws of the state in which the WORK is performed, Workmen's Compensation Insurance, including occupational disease provisions, for all of the CONTRACTOR'S employees at the site of the PROJECT and in case any WORK is sublet, the CONTRACTOR shall require such SUBCONTRACTOR similarly to provide Workmen's Compensation Insurance, including occupational disease provisions for all of the latter's employees unless such employees are covered by the protection afforded by the CONTRACTOR. In case any class of employees engaged in hazardous work under this contract at the site of the PROJECT is not protected under Workmen's Compensation statute, the CONTRACTOR shall provide, and shall cause each SUBCONTRACTOR to provide, adequate and suitable insurance for the protection of its employees not otherwise protected.

5. The CONTRACTOR shall secure, if applicable, "All Risk" type Builder's Risk Insurance for WORK to be performed. Unless specifically authorized by the OWNER, the amount of such insurance shall not be less than the CONTRACT PRICE totaled in the BID. The policy shall cover not less than the losses due to fire, explosion, hail, lightning, vandalism, malicious mischief, wind, collapse, riot, aircraft, and smoke during the CONTRACT TIME, and until the WORK is accepted by the OWNER. The policy shall name as the insured the CONTRACTOR, and the OWNER.

H-16. WEATHER DATA. The Contractor shall avail himself of weather bureau data regarding the anticipated temperatures and rainfall.

H-17. REQUIREMENTS OF CONTRACTOR'S VEHICLES.

1. For the purpose of this Section, the following definitions apply:

   a. Vehicle - All conveyance, except aircraft, used on the ground to transport persons, materials, or equipment.

   b. Aircraft Operation Areas - Those areas which encompass the runways, taxiways, and other areas of the airport utilized for taxiing, take-off, and landing of aircraft, including aprons and parking areas.

   c. Airfield Service Vehicles - Those vehicles operated by Airport management or the Contractor and routinely used for service, maintenance, and construction on the aircraft movement area.

   d. Aircraft Support Vehicles - Those vehicles routinely used on the aircraft aprons or parking areas in support of aircraft operations.

   e. Service and Delivery Vehicles - Those vehicles operating on the air operation areas which pick up and deliver air cargo and airport and airline supplies.

2. No vehicles shall operate within the air operations areas unless it is required for delivery and pick up of Contractor's personnel, materials, air cargo, aircraft servicing, airport maintenance, or in emergency conditions.

3. No vehicle will be given authorization to operate on the air operations area unless it shall be in good mechanical order, with adequate lights, horn, brakes and clear vision from the driver's seat. Trailer and semi-trailers will not be permitted unless they are equipped with reflector lights and proper functional brakes so that when disengaged from the towing vehicle, neither aircraft blast nor wind will cause them to become free rolling. Positive locking couplings will be required for all towed equipment.

4. All vehicle operators are required, by the HATTIESBURG-BOBBY L. CHAIN AIRPORT, to have a valid operator's permit for a motor vehicle before operating a vehicle on the airport property. In addition, all vehicles to be operated on airport property are required to be registered by the State of Mississippi, except those not required by state statutes.

5. The HATTIESBURG-BOBBY L. CHAIN MUNICIPAL AIRPORT has established guidelines for operating within the air operations area:

a. General vehicle regulations:

(1) No person shall operate a motor vehicle on the airport when such vehicle does not posses valid license tags issued by the appropriate authority.

(2) The driver of any motor vehicle operated on the airport must at all times comply with a lawful order, signal or directive of an authorized representative of the airport.

(3) No motor vehicle shall be operated on the airport if it is so constructed, equipped or loaded as to endanger persons or property.

(4) No person shall park a motor vehicle on the airport other than in the area specifically established by the Airport Manager for the parking of the equipment.

(5) All motor vehicles, except scooters, shall be equipped with two headlights and one or more red taillights; the headlights to be of sufficient brilliance to assure safety in driving at night, and all lights shall be kept lighted after sunset unless the vehicle is in a designated parking area.

(6) All motor vehicles shall be equipped with two reflectors on the rear and two reflectors for each side (front and rear). A reflector will be considered adequate when it is so designed, located and maintained as to be visible for at least five hundred feet when facing an oncoming vehicle with ordinary headlights.

(7) Emergency conditions existing on the airport will not mitigate or cancel any existing rule. During such conditions all drivers of every motor vehicle shall make certain that his vehicle does not move in any direction that could interfere with any or all authorized operations necessary for the effective control of the emergency.

(8) Any equipment not needed immanently for repairs or construction of runway or taxiways shall not be parked within a safety area. Parking of equipment on the airport during hours when repairs or construction are not in progress shall not be closer than 250 feet from the edge of any active taxiway, runway, ramp, or apron. In any event, such equipment will be marked by flags not less than 3 feet square made of alternating 1 foot squares of white and international orange cloth; and during hours of darkness by obstruction lights when applicable.

b. Right-of-Way between motor vehicles.

(1) Emergency vehicles shall have the right-of-way over all other motor vehicles operating on the airport.

(2) On the aprons, fuel tenders shall have the right-of way over other vehicles.

(3) On the aprons, motor vehicles operated in support of air carrier operations shall have the right-of-way over administrative and maintenance vehicles except as noted in 4.

(4) Maintenance and construction vehicles shall have the right-of-way when operating within routes specifically designated by the Airport Manager in each instance of repairs or construction requiring several movements within a short period of time or during any extensive construction.

c. Right-of-way between motor vehicles and aircraft.

(1) All vehicles shall relinquish right-of-way to any aircraft moving under its own power.

(2) All vehicles shall pass on the pilot's side of an aircraft moving under its own power.

(3) When parking adjacent to a runway, all vehicles must park parallel to the runway and at least 200 feet to the outside of the runway lights.

6. The Airport Manager shall have the responsibility of control over the vehicular traffic operating on the air operations area. All vehicles are required to obtain clearance from the Airport Manager before entering any active area of the air operations area. All vehicles must obtain additional clearance from the Airport Manager before crossing an active runway.

7. THE HATTIESBURG-BOBBY L. CHAIN MUNICIPAL AIRPORT requires that all vehicles to be operated on the air operations area shall display the name of the owner or lessee thereon, by means of a name plate or lettering. Construction contractor's equipment and personnel vehicles will be identified by means of a 3-foot square flag as described in paragraph 5a (9) herein before.

H-18. WORK PHASES. Work phases are delineated on the drawings.

ENGINEERING AND DESIGN SPECIFICATIONS

HATTIESBURG-BOBBY L. CHAIN MUNICIPAL AIRPORT
APRON RESTORATION PART I

A.I.P Project No. 3-28-0031-0026-2018
for the
CITY OF HATTIESBURG

ARE Consultants, Inc.
P.O. Box 38252
Shreveport, LA 71133
(318) 222-8252

1216 S. Morrison, STE 5
Hammond, La 70403

GENERAL PROVISIONS

SECTION 10: DEFINITION OF TERMS

Whenever the following terms are used in these specifications, in the contract, in any documents or other instruments pertaining to construction where these specifications govern, the intent and meaning shall be interpreted as follows:

10-01 AASHTO. The American Association of State Highway and Transportation Officials, the successor association to AASHO.

10-02 ACCESS ROAD. The right-of-way, the roadway and all improvements constructed thereon connecting the airport to a public highway.

10-03 ADVERTISEMENT. A public announcement, as required by local law, inviting bids for work to be performed and materials to be furnished.

10-04 AIP. The Airport Improvement Program, a grant-in-aid program, administered by the Federal Aviation Administration.

10-05 AIR OPERATIONS AREA. For the purpose of these specifications, the term air operations area shall mean any area of the airport used or intended to be used for the landing, takeoff, or surface maneuvering of aircraft. An air operation area shall include such paved or unpaved areas that are used or intended to be used for the unobstructed movement of aircraft in addition to its associated runway, taxiway, or apron.

10-06 AIRPORT. Airport means an area of land or water which is used or intended to be used for the landing and takeoff of aircraft, and includes its buildings and facilities, if any.

10-07 ASTM. The American Society for Testing and Materials.

10-08 AWARD. The acceptance, by the owner, of the successful bidder's proposal.

10-09 BIDDER. Any individual, partnership, firm, or corporation, acting directly or through a duly authorized representative, who submits a proposal for the work contemplated.

10-10 BUILDING AREA. An area on the airport to be used, considered, or intended to be used for airport buildings or other airport facilities or rights-of-way together with all airport buildings and facilities located thereon.

10-11 CALENDAR DAY. Every day shown on the calendar.

10-12 CHANGE ORDER. A written order to the Contractor covering changes in the plans, specifications, or proposal quantities and establishing the basis of payment and contract time adjustment, if any, for the work affected by such changes. The work, covered by a change order, shall be within the scope of the contract.

10-13 CONTRACT. The written agreement covering the work to be performed. The awarded contract shall include, but is not limited to: The Advertisement; The Contract Form; The Proposal; The Performance Bond; The Payment Bond; any required insurance certificates; The Specifications; The Plans, and any addenda issued to bidders.

10-14 CONTRACT ITEM (PAY ITEM). A specific unit of work for which a price is provided in the contract.

10-15 CONTRACT TIME. The number of calendar days or working days, stated in the proposal, allowed for completion of the contract, including authorized time extensions. If a calendar date of completion is stated in the proposal, in lieu of a number of calendar or working days, the contract shall be completed by that date.

10-16 CONTRACTOR. The individual, partnership, firm, or corporation primarily liable for the acceptable performance of the work contracted and for the payment of all legal debts pertaining to the work who acts directly or through lawful agents or employees to complete the contract work.

10-17 DRAINAGE SYSTEM. The system of pipes, ditches, and structures by which surface or subsurface waters are collected and conducted from the airport area.

10-18 ENGINEER. The individual, partnership, firm, or corporation duly authorized by the owner (sponsor) to be responsible for engineering supervision of the contract work and acting directly or through an authorized representative.

10-19 EQUIPMENT. All machinery, together with the necessary supplies for upkeep and maintenance, and also all tools and apparatus necessary for the proper construction and acceptable completion of the work.

10-20 EXTRA WORK. An item of work not provided for in the awarded contract as previously modified by change order or supplemental agreement, but which is found by the Engineer to be necessary to complete the work within the intended scope of the contract as previously modified.

10-21 FAA. The Federal Aviation Administration of the U.S. Department of Transportation. When used to designate a person, FAA shall mean the Administrator or his/her duly authorized representative.

10-22 FEDERAL SPECIFICATIONS. The Federal Specifications and Standards, and supplements, amendments, and indices thereto are prepared and issued by the General Services Administration of the Federal Government.

10-23 INSPECTOR. An authorized representative of the Engineer assigned to make all necessary inspections and/or tests of the work performed or being performed, or of the materials furnished or being furnished by the Contractor.

10-24 INTENTION OF TERMS. Whenever, in these specifications or on the plans, the words "directed," "required," "permitted," "ordered," "designated," "prescribed," or words of the like import are used, it shall be understood that the direction, requirement, permission, order, designation, or prescription of the Engineer is intended; and similarly, the words "approved," "acceptable," "satisfactory," or words of like import, shall mean approved by, or acceptable to, or satisfactory to the Engineer, subject in each case to the final determination of the owner.

Any reference to a specific requirement of a numbered paragraph of the contract specifications or a cited standard shall be interpreted to include all general requirements of the entire section, specification item, or cited standard that may be pertinent to such specific reference.

10-25 LABORATORY. The official testing laboratories of the owner or such other laboratories as may be designated by the Engineer.

10-26 LIGHTING. A system of fixtures providing or controlling the light sources used on or near the airport or within the airport buildings. The field lighting includes all luminous signals, markers, floodlights, and illuminating devices used on or near the airport or to aid in the operation of aircraft landing at, taking off from, or taxiing on the airport surface.

10-27 MAJOR AND MINOR CONTRACT ITEMS. A major contract item shall be any item that is listed in the proposal, the total cost of which is equal to or greater than 20 percent of the total amount of the award contract. All other items shall be considered minor contract items.

10-28 MATERIALS. Any substance specified for use in the construction of the contract work.

10-29 NOTICE TO PROCEED. A written notice to the Contractor to begin the actual contract work on a previously agreed to date. If applicable, the Notice to Proceed shall state the date on which the contract time begins.

10-30 OWNER (SPONSOR). The term owner shall mean the party of the first part or the contracting agency signatory to the contract. For AIP contracts, the term sponsor shall have the same meaning as the term owner.

10-31 PAVEMENT. The combined surface course, base course, and subbase course, if any, considered as a single unit.

10-32 PAYMENT BOND. The approved form of security furnished by the Contractor and his/her surety as a guaranty that he will pay in full all bills and accounts for materials and labor used in the construction of the work.

10-33 PERFORMANCE BOND. The approved form of security furnished by the Contractor and his/her surety as a guaranty that the Contractor will complete the work in accordance with the terms of the contract.

10-34 PLANS. The official drawings or exact reproductions which show the location, character, dimensions and details of the airport and the work to be done and which are to be considered as a part of the contract, supplementary to the specifications.

10-35 PROJECT. The agreed scope of work for accomplishing specific airport development with respect to a particular airport.

10-36 PROPOSAL. The written offer of the bidder (when submitted on the approved proposal form) to perform the contemplated work and furnish the necessary materials in accordance with the provisions of the plans and specifications.

10-37 PROPOSAL GUARANTY. The security furnished with a proposal to guarantee that the bidder will enter into a contract if his/her proposal is accepted by the owner.

10-38 RUNWAY. The area on the airport prepared for the landing and takeoff of aircraft.

10-39 SPECIFICATIONS. A part of the contract containing the written directions and requirements for completing the contract work. Standards for specifying materials or testing which are cited in the contract specifications by reference shall have the same force and effect as if included in the contract physically.

10-40 STRUCTURES. Airport facilities such as bridges; culverts; catch basins, inlets, retaining walls, cribbing; storm and sanitary sewer lines; water lines; under drains; electrical ducts, manholes, hand holes, lighting fixtures and bases; transformers; flexible and rigid pavements; navigational aids; buildings; vaults; and, other manmade features of the airport that may be encountered in the work and not otherwise classified herein.

10-41 SUBGRADE. The soil which forms the pavement foundation.

10-42 SUPERINTENDENT. The Contractor's executive representative who is present on the work during progress, authorized to receive and fulfill instructions from the Engineer, and who shall supervise and direct the construction.

10-43 SUPPLEMENTAL AGREEMENT. A written agreement between the Contractor and the owner covering: (1) work that would increase or decrease the total amount of the awarded contract, or any major contract item, by more than 25 percent, such increased or decreased work being within the scope of the originally awarded contract; or (2) work that is not within the scope of the originally awarded contract.

10-44 SURETY. The corporation, partnership, or individual, other than the Contractor, executing payment or performance bonds which are furnished to the owner by the Contractor.

10-45 TAXIWAY. For the purpose of this document, the term taxiway means the portion of the air operations area of an airport that has been designated by competent airport authority for movement of aircraft to and from the airport's runways or aircraft parking areas.

10-46 WORK. The furnishing of all labor, materials, tools, equipment, and incidentals necessary or convenient to the Contractor's performance of all duties and obligations imposed by the contract, plans, and specifications.

10-47 WORKING DAY. A working day shall be any day other than a legal holiday, Saturday, or Sunday on which the normal working forces of the Contractor may proceed with regular work for at least 6 hours toward completion of the contract. Unless work is suspended for causes beyond the Contractor's control, Saturdays, Sundays and holidays on which the Contractor's forces engage in regular work, requiring the presence of an inspector, will be considered as working days.

END OF SECTION 10

CLARIFICATIONS TO SECTION 20

The provisions of this specification shall be applicable except as modified as follows:

All instances of "State Highway Division" change to read "Mississippi Department of Transportation and Development - Aviation Division."

SECTION 20: REQUIREMENTS AND CONDITIONS

20-01 ADVERTISEMENT (Notice to Bidders). See Section A.

20-02 PREQUALIFICATION OF BIDDERS. Each bidder shall furnish the owner satisfactory evidence of his/her competency to perform the proposed work. Such evidence of competency, unless otherwise specified, shall consist of statements covering the bidder's past experience on similar work, a list of equipment that would be available for the work, and a list of key personnel that would be available. In addition, each bidder shall furnish the owner satisfactory evidence of his/her financial responsibility. Such evidence of financial responsibility, unless otherwise specified, shall consist of a confidential statement or report of the bidder's financial resources and liabilities as of the last calendar year or the Contractor's last fiscal year. Such statements or reports shall be certified by a public accountant. At the time of submitting such financial statements or reports, the bidder shall further certify whether his/her financial responsibility is approximately the same as stated or reported by the public accountant. If the bidder's financial responsibility has changed, the bidder shall qualify the public accountant's statement or report to reflect his/her (bidder's) true financial condition at the time such qualified statement or report is submitted to the owner.

20-03 CONTENTS OF PROPOSAL FORMS. The owner shall furnish bidders with proposal forms. All papers bound with or attached to the proposal forms are necessary parts and must not be detached.

The plans specifications, and other documents designated in the proposal form shall be considered a part of the proposal whether attached or not.

20-04 ISSUANCE OF PROPOSAL FORMS. The owner reserves the right to refuse to issue a proposal form to a prospective bidder should such bidder be in default for any of the following reasons:

a. Failure to comply with any pre-qualification regulations of the owner, if such regulations are cited, or otherwise included, in the proposal as a requirement for bidding.

b. Failure to pay, or satisfactorily settle, all bills due for labor and materials on former contracts in force (with the owner) at the time the owner issues the proposal to a prospective bidder.

c. Contractor default under previous contracts with the owner.

d. Unsatisfactory work on previous contracts with the owner.

20-05 INTERPRETATION OF ESTIMATED PROPOSAL QUANTITIES. An estimate of quantities of work to be done and materials to be furnished under these specifications is given in the proposal. It is the result of careful calculations and is believed to be correct. It is given only

as a basis for comparison of proposals and the award of the contract. The owner does not expressly or by implication agree that the actual quantities involved will correspond exactly therewith; nor shall the bidder plead misunderstanding or deception because of such estimates of quantities, or of the character, location, or other conditions pertaining to the work. Payment to the Contractor will be made only for the actual quantities of work performed or materials furnished in accordance with the plans and specifications. It is understood that the quantities may be increased or decreased as hereinafter provided in the subsection titled **ALTERATION OF WORK AND QUANTITIES** of Section 40 without in any way invalidating the unit bid prices.

20-06 EXAMINATION OF PLANS, SPECIFICATIONS, AND SITE. The bidder is expected to carefully examine the site of the proposed work, the proposal, plans, specifications, and contract forms. He shall satisfy himself as to the character, quality, and quantities of work to be performed, materials to be furnished, and as to the requirements of the proposed contract. The submission of a proposal shall be prima facie evidence that the bidder has made such examination and is satisfied as to the conditions to be encountered in performing the work and as to the requirements of the proposed contract, plans, and specifications.

Boring logs and other records of subsurface investigations and tests are available for inspection of bidders. It is understood and agreed that such subsurface information, whether included in the plans, specifications, or otherwise made available to the bidder, was obtained and is intended for the owner's design and estimating purposes only. Such information has been made available for the convenience of all bidders. It is further understood and agreed that each bidder is solely responsible for all assumptions, deductions, or conclusions which he may make or obtain from his/her examination of the boring logs and other records of subsurface investigations and tests that are furnished by the owner.

20-07 PREPARATION OF PROPOSAL. The bidder shall submit his/her proposal on the forms furnished by the owner. All blank spaces in the proposal forms must be correctly filled in where indicated for each and every item for which a quantity is given. The bidder shall state the price (written in ink or typed) both in words and numerals for which he proposes to do each pay item furnished in the proposal. In case of conflict between words and numerals, the words, unless obviously incorrect, shall govern.

The bidder shall sign his/her proposal correctly and in ink. If the proposal is made by an individual, his/her name and post office address must be shown. If made by a partnership, the name and post office address of each member of the partnership must be shown. If made by a corporation, the person signing the proposal shall give the name of the state under the laws of which the corporation was chartered and the name, titles, and business address of the president, secretary, and the treasurer. Anyone signing a proposal as an agent shall file evidence of his/her authority to do so and that the signature is binding upon the firm or corporation.

20-08 IRREGULAR PROPOSALS. Proposals shall be considered irregular for the following reasons:

a. If the proposal is on a form other than that furnished by the owner, or if the owner's form is altered, or if any part of the proposal form is detached.

b. If there are unauthorized additions, conditional or alternate pay items, or irregularities of any kind which make the proposal incomplete, indefinite, or otherwise ambiguous.

c. If the proposal does not contain a unit price for each pay item listed in the proposal, except in the case of authorized alternate pay items, for which the bidder is not required to furnish a unit price.

d. If the proposal contains unit prices that are obviously unbalanced.

e. If the proposal is not accompanied by the proposal guaranty specified by the owner.

The owner reserves the right to reject any irregular proposal and the right to waive technicalities if such waiver is in the best interest of the owner and conforms to local laws and ordinances pertaining to the letting of construction contracts.

20-09 BID GUARANTEE. Each separate proposal shall be accompanied by a certified check, or other specified acceptable collateral, in the amount specified in the proposal form. Such check, or collateral, shall be made payable to the owner.

20-10 DELIVERY OF PROPOSAL. Each proposal submitted shall be placed in a sealed envelope plainly marked with the project number, location of airport, and name and business address of the bidder on the outside. When sent by mail, preferably registered, the sealed proposal, marked as indicated above, should be enclosed in an additional envelope. No proposal will be considered unless received at the place specified in the advertisement before the time specified for opening all bids. Proposals received after the bid opening time shall be returned to the bidder unopened.

20-11 WITHDRAWAL OR REVISION OF PROPOSALS. A bidder may withdraw or revise (by withdrawal of one proposal and submission of another) a proposal provided that the bidder's request for withdrawal is received by
the owner in writing or by telegram before the time specified for opening bids. Revised proposals must be received at the place specified in the advertisement before the time specified for opening all bids.

20-12 PUBLIC OPENING OF PROPOSALS. Proposals shall be opened, and read, publicly at the time and place specified in the advertisement. Bidders, their authorized agents, and other interested persons are invited to attend. Proposals that have been withdrawn (by written or telegraphic request) or received after the time specified for opening bids shall be returned to the bidder unopened.

20-13 DISQUALIFICATION OF BIDDERS. A bidder shall be considered disqualified for any of the following reasons:

a. Submitting more than one proposal from the same partnership, firm, or corporation under the same or different name.

b. Evidence of collusion among bidders. Bidders participating in such collusion shall be disqualified as bidders for any future work of the owner until any such participating bidder has been reinstated by the owner as a qualified bidder.

c. If the bidder is considered to be in default for any reason specified in the subsection titled **ISSUANCE OF PROPOSAL FORMS** of this section.

END OF SECTION 20

SECTION 30: AWARD AND EXECUTION OF CONTRACT

30-01 CONSIDERATION OF PROPOSALS. After the proposals are publicly opened and read, they will be compared on the basis of the summation of the products obtained by multiplying the estimated quantities shown in the proposal by the unit bid prices. If a bidder's proposal contains a discrepancy between unit bid prices written in words and unit bid prices written in numbers, the unit price written in words shall govern.

Until the award of a contract is made, the owner reserves the right to reject a bidder's proposal for any of the following reasons:

a. If the proposal is irregular as specified in the subsection titled **IRREGULAR PROPOSALS** of Section 20.

b. If the bidder is disqualified for any of the reasons specified in the subsection titled **DISQUALIFICATION OF BIDDERS** of Section 20.

In addition, until the award of a contract is made, the owner reserves the right to reject any or all proposals, waive technicalities, if such waiver is in the best interest of the owner and is in conformance with applicable state and local laws or regulations pertaining to the letting of construction contracts; advertise for new proposals; or proceed with the work otherwise. All such actions shall promote the owner's best interests.

30-02 AWARD OF CONTRACT. The award of a contract, if it is to be awarded, shall be made within 30 calendar days of the date specified for publicly opening proposals, unless otherwise specified herein.

Award of the contract shall be made by the owner to the lowest, qualified bidder whose proposal conforms to the cited requirements of the owner.

30-03 CANCELLATION OF AWARD. The owner reserves the right to cancel the award without liability to the bidder, except return of proposal guaranty, at any time before a contract has been fully executed by all parties and is approved by the owner in accordance with the subsection titled **APPROVAL OF CONTRACT** of this section.

30-04 RETURN OF PROPOSAL GUARANTY. All proposal guaranties, except those of the two lowest bidders, will be returned immediately after the owner has made a comparison of bids as hereinbefore specified in the subsection titled **CONSIDERATION OF PROPOSALS** of this section. Proposal guaranties of the two lowest bidders will be retained by the owner until such time as an award is made, at which time, the unsuccessful bidder's proposal guaranty will be returned. The successful bidder's proposal guaranty will be returned as soon as the owner receives the contracts bonds as specified in the subsection titled **REQUIREMENTS OF CONTRACT BONDS** of this section.

30-05 REQUIREMENTS OF CONTRACT BONDS. At the time of the execution of the contract, the successful bidder shall furnish the owner a surety bond or bonds which have been

fully executed by the bidder and the surety guaranteeing the performance of the work and the payment of all legal debts that may be incurred by reason of the Contractor's performance of the work. The surety and the form of the bond or bonds shall be acceptable to the owner. Unless otherwise specified in this subsection, the surety bond or bonds shall be in a sum equal to the full amount of the contract.

30-06 EXECUTION OF CONTRACT. The successful bidder shall sign (execute) the necessary agreements for entering into the contract and return such signed contract to the owner, along with the fully executed surety bond or bonds specified in the subsection titled **REQUIREMENTS OF CONTRACT BONDS** of this section, within 15 calendar days from the date mailed or otherwise delivered to the successful bidder. If the contract is mailed, special handling is recommended.

30-07 APPROVAL OF CONTRACT. Upon receipt of the contract and contract bond or bonds that have been executed by the successful bidder, the owner shall complete the execution of the contract in accordance with local laws or ordinances, and return the fully executed contract to the Contractor. Delivery of the fully executed contract to the Contractor shall constitute the owner's approval to be bound by the successful bidder's proposal and the terms of the contract.

30-08 FAILURE TO EXECUTE CONTRACT. Failure of the successful bidder to execute the contract and furnish an acceptable surety bond or bonds within the 15 calendar day period specified in the subsection titled **REQUIREMENTS OF CONTRACT BONDS** of this section shall be just cause for cancellation of the award and forfeiture of the proposal guaranty, not as a penalty, but as liquidation of damages to the owner.

END OF SECTION 30

SECTION 40: SCOPE OF WORK

40-01 INTENT OF CONTRACT. The intent of the contract is to provide for construction and completion, in every detail, of the work described. It is further intended that the Contractor shall furnish all labor, materials, equipment, tools, transportation, and supplies required to complete the work in accordance with the plans, specifications, and terms of the contract.

40-02 ALTERATION OF WORK AND QUANTITIES. The owner reserves and shall have the right to make such alterations in the work as may be necessary or desirable to complete the work originally intended in an acceptable manner. Unless otherwise specified herein, the Engineer shall be and is hereby authorized to make such alterations in the work as may increase or decrease the originally awarded contract quantities, provided that the aggregate of such alterations does not change the total contract cost or the total cost of any major contract item by more than 25 percent (total cost being based on the unit prices and estimated quantities in the awarded contract). Alterations which do not exceed the 25 percent limitation shall not invalidate the contract nor release the surety, and the Contractor agrees to accept payment for such alterations as if the altered work had been a part of the original contract. These alterations which are for work within the general scope of the contract shall be covered by "Change Orders" issued by the Engineer. Change orders for altered work shall include extensions of contract time where, in the Engineer's opinion, such extensions are commensurate with the amount and difficulty of added work.

Should the aggregate amount of altered work exceed the 25 percent limitation here-in-before specified, such excess altered work shall be covered by supplemental agreement. If the owner and the Contractor are unable to agree on a unit adjustment for any contract item that requires a supplemental agreement, the owner reserves the right to terminate the contract with respect to the item and make other arrangements for its completion.

40-03 OMITTED ITEMS. The Engineer may, in the owner's best interest, omit from the work any contract item, except major contract items. Major contract items may be omitted by a supplemental agreement. Such omission of contract items shall not invalidate any other contract provision or requirement.

Should a contract item be omitted or otherwise ordered to be non-performed, the Contractor shall be paid for all work performed toward completion of such item prior to the date of the order to omit such item. Payment for work performed shall be in accordance with the subsection titled **PAYMENT FOR OMITTED ITEMS** of Section 90.

40-04 EXTRA WORK. Should acceptable completion of the contract require the Contractor to perform an item of work for which no basis of payment has been provided in the original contract or previously issued change orders or supplemental agreements, the same shall be called Extra Work. Extra work that is within the general scope of the contract shall be covered by written change order. Change orders for such extra work shall contain agreed unit prices for performing the change order work in accordance with the requirements specified in the order, and shall contain any adjustment to the contract time that, in the Engineer's opinion, is necessary for completion of such extra work.

When determined by the Engineer to be in the owner's best interest, he may order the Contractor to proceed with extra work by force account as provided in the subsection titled **PAYMENT FOR EXTRA AND FORCE ACCOUNT WORK** of Section 90.

Extra work that is necessary for acceptable completion of the project, but is not within the general scope of the work covered by the original contract shall be covered by a Supplemental Agreement as here-in-before defined in the subsection titled **SUPPLEMENTAL AGREEMENT** of Section 10.

Any claim for payment of extra work that is not covered by written agreement (change order or supplemental agreement) shall be rejected by the owner.

40-05 MAINTENANCE OF TRAFFIC. It is the explicit intention of the contract that the safety of aircraft, as well as the Contractor's equipment and personnel, is the most important consideration. It is understood and agreed that the Contractor shall provide for the free and unobstructed movement of aircraft in the air operations areas of the airport with respect to his/her own operations and the operations of all his/her subcontractors as specified in the subsection titled **LIMITATION OF OPERATIONS** of Section 80. It is further understood and agreed that the Contractor shall provide for the uninterrupted operation of visual and electronic signals (including power supplies thereto) used in the guidance of aircraft while operating to, from, and upon the airport as specified in the subsection titled **CONTRACTOR'S RESPONSIBILITY FOR UTILITY SERVICE AND FACILITIES OF OTHERS** in Section 70.

With respect to his/her own operations and the operations of all his/her subcontractors, the Contractor shall provide marking, lighting, and other acceptable means of identifying: personnel; equipment; vehicles; storage areas; and any work area or condition that may be hazardous to the operation of aircraft, fire-rescue equipment, or maintenance vehicles at the airport.

When the contract requires the maintenance of vehicular traffic on an existing road, street, or highway during the Contractor's performance of work that is otherwise provided for in the contract, plans, and specifications, the Contractor shall keep such road, street, or highway open to all traffic and shall provide such maintenance as may be required to accommodate traffic. The Contractor shall furnish erect, and maintain barricades, warning signs, flagmen, and other traffic control devices in reasonable conformity with the manual of Uniform Traffic Control Devices for Streets and Highways (published by the United States Government Printing Office), unless otherwise specified herein. The Contractor shall also construct and maintain in a safe condition any temporary connections necessary for ingress to and egress from abutting property or intersecting roads, streets or highways. Unless otherwise specified herein, the Contractor will not be required to furnish snow removal for such existing road, street, or highway.

The Contractor shall make his/her own estimate of all labor, materials, equipment, and incidentals necessary for providing the maintenance of aircraft and vehicular traffic as specified in this subsection.

The cost of maintaining the aircraft and vehicular traffic specified in this subsection shall not be measured or paid for directly, but shall be included in the various contract items.

40-06 REMOVAL OF EXISTING STRUCTURES. All existing structures encountered within the established lines, grades, or grading sections shall be removed by the Contractor, unless such existing structures are otherwise specified to be relocated, adjusted up or down, salvaged, abandoned in place, reused in the work or to remain in place. The cost of removing such existing structures shall not be measured or paid for directly, but shall be included in the various contract items.

Should the Contractor encounter an existing structure (above or below ground) in the work for which the disposition is not indicated on the plans, the Engineer shall be notified prior to disturbing such structure. The disposition of existing structures so encountered shall be immediately determined by the Engineer in accordance with the provisions of the contract.

Except as provided in the subsection titled **RIGHTS IN AND USE OF MATERIALS FOUND IN THE WORK** of this section, it is intended that all existing materials or structures that may be encountered (within the lines, grades, or grading sections established for completion of the work) shall be utilized in the work as otherwise provided for in the contract and shall remain the property of the owner when so utilized in the work.

40-07 RIGHTS IN AND USE OF MATERIALS FOUND IN THE WORK. Should the Contractor encounter any material such as (but not restricted to) sand, stone, gravel, slag, or concrete slabs within the established lines, grades, or grading sections, the use of which is intended by the terms of the contract to be either embankment or waste, he may at his/her option either:

a. Use such material in another contract item, providing such use is approved by the Engineer and is in conformance with the contract specifications applicable to such use; or,

b. Remove such material from the site, upon written approval of the Engineer; or

c. Use such material for his/her own temporary construction on site; or,

d. Use such material as intended by the terms of the contract.

Should the Contractor wish to exercise option a., b., or c., he shall request the Engineer's approval in advance of such use.

Should the Engineer approve the Contractor's request to exercise option a., b., or c., the Contractor shall be paid for the excavation or removal of such material at the applicable contract price. The Contractor shall replace, at his/her own expense, such removed or excavated material with an agreed equal volume of material that is acceptable for use in constructing embankment, backfills, or otherwise to the extent that such replacement material is needed to complete the

contract work. The Contractor shall not be charged for his/her use of such material so used in the work or removed from the site.

Should the Engineer approve the Contractor's exercise of option a., the Contractor shall be paid, at the applicable contract price, for furnishing and installing such material in accordance with requirements of the contract item in which the material is used.

It is understood and agreed that the Contractor shall make no claim for delays by reason of his/her exercise of option a., b., or c.

The Contractor shall not excavate, remove, or otherwise disturb any material, structure, or part of a structure which is located outside the lines, grades, or grading sections established for the work, except where such excavation or removal is provided for in the contract, plans, or specifications.

40-09 FINAL CLEANING UP. Upon completion of the work and before acceptance and final payment will be made, the Contractor shall remove from the site all machinery, equipment, surplus and discarded materials, rubbish, temporary structures, and stumps or portions of trees. He shall cut all brush and woods within the limits indicated and shall leave the site in a neat and presentable condition. Material cleared from the site and deposited on adjacent property will not be considered as having been disposed of satisfactorily, unless the Contractor has obtained the written permission of such property owner.

END OF SECTION 40

SECTION 50: CONTROL OF WORK

50-01 AUTHORITY OF THE ENGINEER. The Engineer shall decide any and all questions which may arise as to the quality and acceptability of materials furnished, work performed, and as to the manner of performance and rate of progress of the work. He shall decide all questions which may arise as to the interpretation of the specifications or plans relating to the work, the fulfillment of the contract on the part of the Contractor, and the rights of different Contractors on the project. The Engineer shall determine the amount and quality of the several kinds of work performed and materials furnished which are to be paid for the under contract.

50-02 CONFORMITY WITH PLANS AND SPECIFICATIONS. All work and all materials furnished shall be in reasonably close conformity with the lines, grades, grading sections, cross sections, dimensions, material requirements, and testing requirements that are specified (including specified tolerances) in the contract, plans or specifications.

If the Engineer finds the materials furnished, work performed, or the finished product not within reasonably close conformity with the plans and specifications but that the portion of the work affected will, in his/her opinion, result in a finished product having a level of safety, economy, durability, and workmanship acceptable to the owner, he will advise the owner of his/her determination that the affected work be accepted and remain in place. In this event, the Engineer will document his/her determination and recommend to the owner a basis of acceptance which will provide for an adjustment in the contract price for the affected portion of the work. The Engineer's determination and recommended contract price adjustments will be based on good engineering judgment and such tests or retests of the affected work as are, in his/her opinion, needed. Changes in the contract price shall be covered by contract modifications (change order or supplemental agreement) as applicable.

If the Engineer finds the materials furnished, work performed, or the finished product are not in reasonably close conformity with the plans and specifications and have resulted in an unacceptable finished product, the affected work or materials shall be removed and replaced or otherwise corrected by and at the expense of the Contractor in accordance with the Engineer's written orders.

For the purpose of this subsection, the term "reasonably close conformity" shall not be construed as waiving the Contractor's responsibility to complete the work in accordance with the contract, plans, and specifications. The term shall not be construed as waiving the Engineer's right to insist on strict compliance with the requirements of the contract, plans, and specifications during the Contractor's prosecution of the work, when, in the Engineer's opinion, such compliance is essential to provide an acceptable finished portion of the work.

For the purpose of this subsection, the term "reasonably close conformity" is also intended to provide the Engineer with the authority to use good engineering judgment in his/her determinations as to acceptance of work that is not in strict conformity but will provide a finished product equal to or better than that intended by the requirements of the contract, plans and specifications.

50-03 COORDINATION OF CONTRACT, PLANS, AND SPECIFICATIONS. The contract, plans, specifications, and all referenced standards cited are essential parts of the contract requirements. A requirement occurring in one is as binding as though occurring in all. They are intended to be complementary and to describe and provide for a complete work. In case of discrepancy, calculated dimensions will govern over scaled dimensions; contract technical specifications shall govern over contract general provisions, plans, cited standards for materials or testing, and cited FAA advisory circulars; contract general provisions shall govern over plans, cited standards for materials or testing, and cited FAA advisory circulars; plans shall govern over cited standards for materials or testing and cited FAA advisory circulars.

The Contractor shall not take advantage of any apparent error or omission on the plans or specifications. In the event the Contractor discovers any apparent error or discrepancy, he shall immediately call upon the Engineer for his/her interpretation and decision, and such decision shall be final.

50-04 COOPERATION OF CONTRACTOR. The Contractor will be supplied with two copies each of the plans and specifications. He shall have available on the work at all times one copy each of the plans and specifications. Additional copies of plans and specifications may be obtained by the Contractor for the cost of reproduction.

The Contractor shall give constant attention to the work to facilitate the progress thereof, and he shall cooperate with the Engineer and his/her inspectors and with other contractors in every way possible. The Engineer shall allocate he work and designate the sequence of construction in case of controversy between contractors. The Contractor shall have a competent superintendent on the work at all times who is fully authorized as his/her agent on the work. The superintendent shall be capable of reading and thoroughly understanding the plans and specifications and shall receive and fulfill instructions from the Engineer or his/her authorized representative.

50-05 COOPERATION BETWEEN CONTRACTORS. The owner reserves the right to contract for and perform other or additional work on or near the work covered by this contract.

When separate contracts are let within the limits of any one project, each Contractor shall conduct his/her work so as not to interfere with or hinder the progress of completion of the work being performed by other Contractors. Contractors working on the same project shall cooperate with each other as directed.

Each Contractor involved shall assume all liability, financial or otherwise, in connection with his/her contract and shall protect and save harmless the owner from any and all damages or claims that may arise because of inconvenience, delays, or loss experienced by him because of the presence and operations of other Contractors working within the limits of the same project.

The Contractor shall arrange his/her work and shall place and dispose of the materials being used so as not to interfere with the operations of the other Contractors within the limits of the same project. He shall join his/her work with that of the others in an acceptable manner and shall perform it in proper sequence to that of the others.

50-06 CONSTRUCTION LAYOUT AND STAKES. The Engineer shall establish horizontal and vertical control only. The Contractor must establish all layout required for the construction of the work. Such stakes and markings as the Engineer may set for either his/her own or the Contractor's guidance shall be preserved by the Contractor. In case of negligence on the part of the Contractor, or his/her employees, resulting in the destruction of such stakes or markings, an amount equal to the cost of replacing the same may be deducted from subsequent estimates due the Contractor at the discretion of the Engineer.

50-07 AUTOMATICALLY CONTROLLED EQUIPMENT. Whenever batching or mixing plant equipment is required to be operated automatically under the contract and a breakdown or malfunction of the automatic controls occurs, the equipment may be operated manually or by other methods for a period 48 hours following the breakdown or malfunction, provided this method of operations will product results which conform to all other requirements of the contract.

50-08 AUTHORITY AND DUTIES OF INSPECTORS. Inspectors employed by the owner shall be authorized to inspect all work done and all material furnished. Such inspection may extend to all or any part of the work and to the preparation, fabrication, or manufacture of the materials to be used. Inspectors are not authorized to revoke, alter, or waive any provision of the contract. Inspectors are not authorized to issue instructions contrary to the plans and specifications or to act as foreman for the Contractor.

Inspectors employed by the owner are authorized to notify the Contractor or his/her representatives of any failure of the work or materials to conform to the requirements of the contract, plans, or specifications and to reject such nonconforming materials in question until such issues can be referred to the Engineer for his/her decision.

50-09 INSPECTION OF THE WORK. All materials and each part or detail of the work shall be subject to inspection by the Engineer. The Engineer shall be allowed access to all parts of the work and shall be furnished with such information and assistance by the Contractor as is required to make a complete and detailed inspection.

If the Engineer requests it, the Contractor, at any time before acceptance of the work, shall remove or uncover such portions of the finished work as may be directed. After examination, the Contractor shall restore said portions of the work to the standard required by the specifications. Should the work thus exposed or examined prove acceptable, the uncovering, or removing, and the replacing of the covering or making good of the parts removed will be paid for as extra work; but should the work so exposed or examined prove unacceptable, the uncovering, or removing, and the replacing of the covering or making good of the parts removed will be at the Contractor's expense.

Any work done or materials used without supervision or inspection by an authorized representative of the owner may be ordered removed and replaced at the Contractor's expense unless the owner's representative failed to inspect after having been given reasonable notice in writing that the work was to be performed.

Should the contract work include relocation, adjustment, or any other modification to existing facilities, not the property of the (contract) owner, authorized representatives of the owners of such facilities shall have the right to
inspect such work. Such inspection shall in no sense make any facility owner a party to the contract, and shall in no way interfere with the rights of the parties to this contract.

50-10 REMOVAL OF UNACCEPTABLE AND UNAUTHORIZED WORK. All work which does not form to the requirements of the contract, plans, and specifications will be considered unacceptable, unless otherwise determined acceptable by the Engineer as provided in the subsection titled **CONFORMITY WITH PLANS AND SPECIFICATIONS** of this section.

Unacceptable work, whether the result of poor workmanship, use of defective materials, damage through carelessness, or any other cause found to exist prior to the final acceptance of the work, shall be removed immediately and replaced in an acceptable manner in accordance with the provisions of the subsection titled **CONTRACTOR'S RESPONSIBILITY FOR WORK** of Section 70.

Work done contrary to the instructions of the Engineer, work done beyond the lines shown on the plans or as given, except as herein specified, or any extra work done without authority, will be considered as unauthorized and will not be paid for under the provisions of the contract. Work so done may be ordered removed or replaced at the Contractor's expense.

Upon failure on the part of the Contractor to comply forthwith with any order of the Engineer made under the provisions of this subsection, the Engineer will have authority to cause unacceptable work to be remedied or removed and replaced and unauthorized work to be removed and to deduct the costs (incurred by the owner) from any monies due or to become due the Contractor.

50-11 LOAD RESTRICTIONS. The Contractor shall comply with all legal load restrictions in the hauling of materials on public roads beyond the limits of the work. A special permit will not relieve the Contractor of liability for damage which may result from the moving of material or equipment.

The operation of equipment of such weight or so loaded as to cause damage to structures or to any other type of construction will not be permitted. Hauling of materials over the base course or surface course under construction shall be limited as directed. No loads will be permitted on a concrete pavement, base, or structure before the expiration of the curing period. The Contractor shall be responsible for all damage done by his/her hauling equipment and shall correct such damage at his/her own expense.

50-12 MAINTENANCE DURING CONSTRUCTION. The Contractor shall maintain the work during construction and until the work is accepted. This maintenance shall constitute continuous and effective work prosecuted day by day, with adequate equipment and forces so that the work is maintained in satisfactory condition at all times.

In the case of a contract for the placing of a course upon a course or sub-grade previously constructed, the Contractor shall maintain the previous course or sub-grade during all construction operations.

All costs of maintenance work during construction and before the project is accepted shall be included in the unit prices bid on the various contract items, and the Contractor will not be paid an additional amount for such work.

50-13 FAILURE TO MAINTAIN THE WORK. Should the Contractor at any time fail to maintain the work as provided in the subsection titled **MAINTENANCE DURING CONSTRUCTION** of this section, the Engineer shall immediately notify the Contractor of such noncompliance. Such notification shall specify a reasonable time within which the Contractor shall be required to remedy such unsatisfactory maintenance condition. The time specified will give due consideration to the exigency that exists.

Should the Contractor fail to respond to the Engineer's notification, the Engineer may suspend any work necessary for the owner to correct such unsatisfactory maintenance condition, depending on the exigency that exists. Any maintenance cost incurred by the owner, shall be deducted from monies due or to become due the Contractor.

50-14 PARTIAL ACCEPTANCE. If at any time during the prosecution of the project the Contractor substantially completes a usable unit or portion of the work, the occupancy of which will benefit the owner, he may request the Engineer to make final inspection of that unit. If the Engineer finds upon inspection that the unit has been satisfactorily completed in compliance with the contract, he may accept it as being completed, and the Contractor may be relieved of further responsibility for that unit. Such partial acceptance and beneficial occupancy by the owner shall not void or alter any provision of the contract.

50-15 FINAL ACCEPTANCE. Upon due notice from the Contractor of presumptive completion of the entire project, the Engineer and owner will make an inspection. If all construction provided for and contemplated by the contract is found to be completed in accordance with the contract, plans, and specifications, such inspection shall constitute the final inspection. The Engineer shall notify the Contractor in writing of final acceptance as of the date of the final inspection.

If, however, the inspection discloses any work, in whole or in part, as being unsatisfactory, the Engineer will give the Contractor the necessary instructions for correction of same and the Contractor shall immediately comply with and execute such instructions. Upon correction of the work, another inspection will be made which shall constitute the final inspection, provided the work has been satisfactorily completed. In such event, the Engineer will make the final acceptance and notify the Contractor in writing of this acceptance as of the date of final inspection.

50-16 CLAIMS FOR ADJUSTMENT AND DISPUTES. If for any reason the Contractor deems that additional compensation is due him for work or materials not clearly provided for in the contract, plans, or specifications or previously authorized as extra work, he shall notify the

Engineer in writing of his/her intention to claim such additional compensation before he begins the work on which he bases the claim. If such notification is not given or the Engineer is not afforded proper opportunity by the Contractor for keeping strict account of actual cost as required, then the Contractor hereby agrees to waive any claim for such additional compensation. Such notice by the Contractor and the fact that the Engineer has kept account of the cost of the work shall not in any way be construed as proving or substantiating the validity of the claim. When the work on which the claim for additional compensation is based has been completed, the Contractor shall, within 10 calendar days, submit his/her written claim to the Engineer who will present it to the owner for consideration in accordance with local laws or ordinances.

Nothing in this subsection shall be construed as a waiver of the Contractor's right to dispute final payment based on differences in measurements or computations.

END OF SECTION 50

SECTION 60: CONTROL OF MATERIALS

60-01 SOURCE OF SUPPLY AND QUALITY REQUIREMENTS. The materials used on the work shall conform to the requirements of the contract, plans, and specifications. Unless otherwise specified, such materials that are manufactured or processed shall be new (as compared to used or reprocessed).

In order to expedite the inspection and testing of materials, the Contractor shall furnish complete statements to the Engineer as to the origin, composition, and manufacture of all materials to be used in the work. Such statements shall be furnished promptly after execution of the contract but, in all cases, prior to delivery of such materials.

At the Engineer's option, materials may be approved at the source of supply before delivery is stated. If it is found after trial that sources of supply for previously approved materials do not produce specified products, the Contractor shall furnish materials from other sources.

60-02 SAMPLES, TESTS, AND CITED SPECIFICATIONS. All materials used in the work shall be inspected, tested, and approved by the Engineer before incorporation in the work. Any work in which untested materials are used without approval or written permission of the Engineer shall be performed at the Contractor's risk. Materials found to be unacceptable and unauthorized will not be paid for and, if directed by the Engineer, shall be removed at the Contractor's expense. Unless otherwise designated, tests in accordance with the cited standard methods of AASHTO or ASTM which are current on the date of advertisement for bids will be made by and at the expense of the owner. Samples will be taken by a qualified representative of the owner. All materials being used are subject to inspection, test, or rejection at any time prior to or during incorporation into the work. Copies of all tests will be furnished to the Contractor's representative at his/her request.

60-03 CERTIFICATION OF COMPLIANCE. The Engineer may permit the use, prior to sampling and testing, of certain materials or assemblies when accompanied by manufacturer's certificates of compliance stating that such materials or assemblies fully comply with the requirements of the contract. The certificate shall be signed by the manufacturer. Each lot of such materials or assemblies delivered to the work must be accompanied by a certificate of compliance in which the lot is clearly identified.

Materials or assemblies used on the basis of certificates of compliance may be sampled and tested at any time and if found not to be in conformity with contract requirements will be subject to rejection whether in place or not.

The form and distribution of certificates of compliance shall be as approved by the Engineer.

When a material or assembly is specified by "brand name or equal" and the Contractor elects to furnish the specified "brand name," the Contractor shall be required to furnish the manufacturer's certificate of compliance for each lot of such material or assembly delivered to the work. Such certificate of compliance shall clearly identify each lot delivered and shall certify as to:

a. Conformance to the specified performance, testing, quality or dimensional requirements; and,

b. Suitability of the material or assembly for the use intended in the contract work.

Should the Contractor propose to furnish an "or equal" material or assembly, he shall furnish the manufacturer's certificates of compliance as hereinbefore described for the specified brand name material or assembly. However, the Engineer shall be the sole judge as to whether the proposed "or equal" is suitable for use in the work.

The Engineer reserves the right to refuse permission for use of materials or assemblies on the basis of certificates of compliance.

60-04 PLANT INSPECTION. The Engineer or his/her authorized representative may inspect, at its source, any specified material or assembly to be used in the work. Manufacturing plants may be inspected from time to time for the purpose of determining compliance with specified manufacturing methods or materials to be used in the work and to obtain samples required for his/her acceptance of the material or assembly.

Should the Engineer conduct plant inspections, the following conditions shall exist:

a. The Engineer shall have the cooperation and assistance of the Contractor and the producer with whom he has contracted for materials.

b. The Engineer shall have full entry at all reasonable times to such parts of the plant that concern the manufacture or production of the materials being furnished.

c. If required by the Engineer, the Contractor shall arrange for adequate office or working space that may be reasonably needed for conducting plant inspections. Office or working space should be conveniently located with respect to the plant.

It is understood and agreed that the owner shall have the right to retest any material which has been tested and approved at the source of supply after it has been delivered to the site. The Engineer shall have the right to reject only material which, when retested, does not meet the requirements of the contract, plans, or specifications.

60-05 ENGINEER'S FIELD OFFICE AND LABORATORY. When specified and provided for as a contract item, the Contractor shall furnish a building for the exclusive use of the Engineer as a field office and field testing laboratory. The building shall be furnished and maintained by the Contractor as specified herein and shall become property of the Contractor when the contract work is completed.

60-06 STORAGE OF MATERIALS. Materials shall be so stored as to assure the preservation of their quality and fitness for the work. Stored materials, even though approved before storage, may again be inspected prior to their use in the work. Stored materials shall be located so as to

facilitate their prompt inspection. The Contractor shall coordinate the storage of all materials with the Engineer. Materials to be stored on airport property shall not create an obstruction to air navigation nor shall they interfere with the free and unobstructed movement of aircraft. Unless otherwise shown on the plans, the storage of materials and the location of the Contractor's plant and parked equipment or vehicles shall be as directed by the Engineer. Private property shall not be used for storage purposes without written permission of the owner or lessee of such property. The Contractor shall make all arrangements and bear all expenses for the storage of materials on private property. Upon request, the Contractor shall furnish the Engineer a copy of the property owner's permission.

All storage sites on private or airport property shall be restored to their original condition by the Contractor at his/her entire expense, except as otherwise agreed to (in writing) by the owner or lessee of the property.

60-07 UNACCEPTABLE MATERIALS. Any material or assembly that does not conform to the requirements of the contract, plans, or specifications shall be considered unacceptable and shall be rejected. The Contractor shall remove any rejected material or assembly from the site of the work, unless otherwise instructed by the Engineer.

No rejected material or assembly, the defects of which have been corrected by the Contractor, shall not be returned to the site of the work until such time as the Engineer has approved its used in the work.

60-08 OWNER FURNISHED MATERIALS. The Contractor shall furnish all materials required to complete the work, except those specified herein (if any) to be furnished by the owner. Owner-furnished materials shall be made available to the Contractor at the location specified herein.

All costs of handling, transportation from the specified location to the site of work, storage, and installing owner-furnished materials shall be included in the unit price bid for the contract item in which such owner-furnished material is used.

After any owner-furnished material has been delivered to the location specified, the Contractor shall be responsible for any demurrage, damage, loss, or other deficiencies which may occur during the Contractor's handling, storage, or use of such owner-furnished material. The owner will deduct from any monies due or to become due the Contractor any cost incurred by the owner in making good such loss due to the Contractor's handling, storage, or use of owner-furnished materials.

END OF SECTION 60

SECTION 70: LEGAL REGULATIONS AND RESPONSIBILITY TO PUBLIC

70-1 LAWS TO BE OBSERVED. The Contractor shall keep fully informed of all Federal and state laws, all local laws, ordinances, and regulations and all orders and decrees of bodies or tribunals having any jurisdiction or authority, which in any manner affect those engaged or employed on the work, or which in any way affect the conduct of the work. He shall at all times observe and comply with all such laws, ordinances, regulations, orders, and decrees; and shall protect and indemnify the owner and all his/her officers, agents, or servants against any claim or liability arising from or based on the violation of any such law, ordinance, regulation, order, or decree, whether by himself or his/her employees.

70-02 PERMITS, LICENSES, AND TAXES. The Contractor shall procure all permits and licenses, pay all charges, fees, and taxes, and give all notices necessary and incidental to the due and lawful prosecution of the work.

70-03 PATENTED DEVICES, MATERIALS, AND PROCESSES. If the Contractor is required or desires to use any design, device, material, or process covered by letters of patent or copyright, he shall provide for such use by suitable legal agreement with the patentee or owner. The Contractor and the surety shall indemnify and save harmless the owner, any third party, or political subdivision from any and all claims for infringement by reason of the use of any such patented design, device, material or process, or any trademark or copyright, and shall indemnify the owner for any costs, expenses, and damages which it may be obliged to pay by reason of an infringement, at any time during the prosecution or after the completion of the work.

70-04 RESTORATION OF SURFACES DISTURBED BY OTHERS. The owner reserves the right to authorize the construction, reconstruction, or maintenance of any public or private utility service, FAA or National Oceanic and Atmospheric Administration (NOAA) facility, or a utility service of another government agency at any time during the progress of the work. To the extent that such construction, reconstruction, or maintenance has been coordinated with the owner, such authorized work (by others) is indicated as follows:

N/A

Except as listed above, the Contractor shall not permit any individual, firm, or corporation to excavate or otherwise disturb such utility services or facilities located within the limits of the work without the written permission of the Engineer.

Should the owner of public or private utility service, FAA, or NOAA facility, or a utility service of another government agency be authorized to construct, reconstruct, or maintain such utility service or facility during the progress of the work, the Contractor shall cooperate with such owners by arranging and performing the work in this contract so as to facilitate such construction, reconstruction or maintenance by others whether or not such work by others is listed above. When ordered as extra work by the Engineer, the Contractor shall make all necessary repairs to the work which are due to such authorized work by others, unless otherwise provided for in the contract, plans, or specifications. It is understood and agreed that the

Contractor shall not be entitled to make any claim for damages due to such authorized work by others or for any delay to the work resulting from such authorized work.

70-05 FEDERAL AID PARTICIPATION. Not Applicable.

70-06 SANITARY, HEALTH, AND SAFETY PROVISIONS. The Contractor shall provide and maintain in a neat, sanitary condition such accommodations for the use of his/her employees as may be necessary to comply with the requirements of the state and local Board of Health, or of other bodies or tribunals having jurisdiction.

Attention is directed to Federal, state, and local laws, rules and regulations concerning construction safety and health standards. The Contractor shall not require any worker to work in surroundings or under conditions are unsanitary, hazardous, or dangerous to his/her health or safety.

70-07 PUBLIC CONVENIENCE AND SAFETY. The Contractor shall control his/her operations and those of his/her subcontractors and all suppliers, to assure the least inconvenience to the traveling public. Under all circumstances, safety shall be the most important consideration.

The Contractor shall maintain the free and unobstructed movement of aircraft and vehicular traffic with respect to his/her own operations and those of his/her subcontractors and all suppliers in accordance with the subsection titled **MAINTENANCE OF TRAFFIC** of Section 40 hereinbefore specified and shall limit such operations for the convenience and safety of the traveling public as specified in the subsection titled **LIMITATION OF OPERATIONS** of Section 80 hereinafter.

70-08 BARRICADES, WARNING SIGNS, AND HAZARD MARKINGS. The Contractor shall furnish, erect, and maintain all barricades, warning signs, and markings for hazards necessary to protect the public and the work. When used during periods of darkness, such barricades, warning signs, and hazard markings shall be suitably illuminated.

For vehicular and pedestrian traffic, the Contractor shall furnish, erect, and maintain barricades, warning signs, lights and other traffic control devices in reasonable conformity with the Manual of Uniform Traffic Control Devices for Streets and Highways (published by the United States Government Printing Office).

When the work requires closing an air operations area of the airport or portion of such area, the Contractor shall furnish, erect, and maintain temporary markings and associated lighting conforming to the requirements of AC 150/5340-1, Marking of Paved Areas on Airports.

The Contractor shall furnish, erect, and maintain markings and associated lighting of open trenches, excavations, temporary stock piles, and his/her parked construction equipment that may be hazardous to the operation of emergency fire-rescue or maintenance vehicles on the airport in reasonable conformance to AC 150/5370-2, Operational Safety on Airports During Construction Activity.

The Contractor shall identify each motorized vehicle or piece of construction equipment in reasonable conformance to AC 150/5370-2.

The Contractor shall furnish and erect all barricades, warning signs, and markings for hazards prior to commencing work which requires such erection and shall maintain the barricades, warning signs, and markings for hazards until their dismantling is directed by the Engineer.

Open-flame type lights shall not be permitted within the air operations areas of the airport.

70-09 USE OF EXPLOSIVES. When the use of explosives is necessary for the prosecution of the work, the Contractor shall exercise the utmost care not to endanger life or property, including new work. The Contractor shall be responsible for all damage resulting from the use of explosives.

All explosives shall be stored in a secure manner in compliance with all laws and ordinances, and all such storage places shall be clearly marked. Where no local laws or ordinances apply, storage shall be provided satisfactory to the Engineer and, in general, not closer than 1,000 feet (300 m) from the work or from any building, road, or other place of human occupancy.

The Contractor shall notify each property owner and public utility company having structures or facilities in proximity to the site of the work of his/her intention to use explosives. Such notice shall be given sufficiently in advance to enable them to take such steps as they may deem necessary to protect their property from injury.

The use of electrical blasting caps shall not be permitted on or within 1,000 feet (300 m) of the airport property.

70-10 PROTECTION AND RESTORATION OF PROPERTY AND LANDSCAPE. The Contractor shall be responsible for the preservation of all public and private property, and shall protect carefully from disturbance or damage all land monuments and property markers until the Engineer has witnessed or otherwise referenced their location and shall not move them until directed.

The Contractor shall be responsible for all damage or injury to property of any character, during the prosecution of the work, resulting from any act, omission, neglect, or misconduct in his/her manner or method of executing the work, or at any time due to defective work or materials, and said responsibility will not be released until the project shall have been completed and accepted.

When or where any direct or indirect damage or injury is done to public or private property by or on account of any act, omission, neglect, or misconduct in the execution of the work, or in consequence of the non-execution thereof by the Contractor, he shall restore, at his/her own expense, such property to a condition similar or equal to that existing before such damage or injury was done, by repairing, or otherwise restoring as may be directed, or he shall make good such damage or injury in an acceptable manner.

70-11 RESPONSIBILITY FOR DAMAGE CLAIMS. The Contractor shall indemnify and save harmless the Engineer and the owner and their officers, and employees from all suits actions, or claims of any character brought because of any injuries or damage received or sustained by any person, persons, or property on account of the operations of the Contractor; or on account of or in consequence of any neglect in safeguarding the work; or through use of unacceptable materials in constructing the work; or because of any act or omission, neglect, or misconduct of said Contractor; or because of any claims or amounts recovered from any infringements of patent, trademark, or copyright; or from any claims or amounts arising or recovered under the "Workmen's Compensation Act," or any other law, ordinance, order, or decree. Money due the Contractor under and by virtue of his/her contract as may be considered necessary by the owner for such purpose may be retained for the use of the owner or, in case no money is due, his/her surety may be held until such suit or suits, action or actions, claim or claims for injuries or damages as aforesaid shall have been settled and suitable evidence to that effect furnished to the owner, except that money due the Contractor will not be withheld when the Contractor produces satisfactory evidence that he is adequately protected by public liability and property damage insurance.

70-12 THIRD PARTY BENEFICIARY CLAUSE. It is specifically agreed between the parties executing the contract that it is not intended by any of the provisions of any part of the contract to create the public or any member thereof a third party beneficiary or to authorize anyone not a party to the contract to maintain a suit for personal injuries or property damage pursuant to the terms or provisions of the contract.

70-13 OPENING SECTIONS OF THE WORK TO TRAFFIC. Should it be necessary for the Contractor to complete portions of the contract work for the beneficial occupancy of the owner prior to completion of the entire contract, such "phasing" of the work shall be specified herein and indicated on the plans. When so specified, the Contractor shall complete such portions of the work on or before the date specified or as otherwise specified. The Contractor shall make his/her own estimate of the difficulties involved in arranging his/her work to permit such beneficial occupancy by the owner as described below:
Open runway or taxiway rehabilitation after 30 calendar days from start of project.

Upon completion of any portion of the work listed above, such portion shall be accepted by the owner in accordance with the subsection titled **PARTIAL ACCEPTANCE** of Section 50.

No portion of the work may be opened by the Contractor for public use until ordered by the Engineer in writing. Should it become necessary to open a portion of the work to public traffic on a temporary or intermittent basis, such openings shall be made when, in the opinion of the Engineer, such portion of the work is in an acceptable condition to support the intended traffic. Temporary or intermittent openings are considered to be inherent in the work and shall not constitute either acceptance of the portion of the work so opened or a waiver of any provision of the contract. Any damage to the portion of the work so opened that is not attributable to traffic which is permitted by the owner shall be repaired by the Contractor at his/her expense.

The Contractor shall make his/her own estimate of the inherent difficulties involved in completing the work under the conditions herein described and shall not claim any added compensation by reason of delay or increased cost due to opening a portion of the contract work.

70-14 CONTRACTOR'S RESPONSIBILITY FOR WORK. Until the Engineer's final written acceptance of the entire completed work, excepting only those portions of the work accepted in accordance with the subsection titled **PARTIAL ACCEPTANCE** of Section 50, the Contractor shall have the charge and care thereof and shall take every precaution against injury or damage to any part due to the action of the elements or from any other cause, whether arising from the execution or from the non-execution of the work. The Contractor shall rebuild, repair, restore, and make good all injuries or damages to any portion of the work occasioned by any of the above causes before final acceptance and shall bear the expense thereof except damage to the work due to unforeseeable causes beyond the control of and without the fault or negligence of the Contractor, including but not restricted to acts of God such as earthquake, tidal wave, tornado, hurricane or other cataclysmic phenomenon of nature, or acts of the public enemy or of government authorities.

If the work is suspended for any cause whatever, the Contractor shall be responsible for the work and shall take such precautions necessary to prevent damage to the work. The Contractor shall provide for normal drainage and shall erect necessary temporary structures, signs, or other facilities at his/her expense. During such period of suspension of work, the Contractor shall properly and continuously maintain in an acceptable growing condition all living material in newly established planting, seedings, and soddings furnished under his/her contract, and shall take adequate precautions to protect new tree growth and other important vegetative growth against injury.

70-15 CONTRACTOR'S RESPONSIBILITY FOR UTILITY SERVICE AND FACILITIES OF OTHERS. As provided in the subsection titled RESTORATION OF SURFACES DISTURBED BY OTHERS of this section, the Contractor shall cooperate with the owner of any public or private utility service, FAA or NOAA, or a utility service of another government agency that may be authorized by the owner to construct, reconstruct or maintain such utility services or facilities during the progress of the work. In addition, the Contractor shall control his/her operations to prevent the unscheduled interruption of such utility services and facilities.

To the extent that such public or private utility services, FAA, or NOAA facilities, or utility services of another governmental agency are known to exist within the limits of the contract work, the approximate locations have been indicated on the plans and the owners are indicated as follows:

Willmut Gas Company
315 South Main Street; P.O. Box 1649
Hattiesburg, MS 39403
(601) 544-6001

It is understood and agreed that the owner does not guarantee the accuracy or the completeness of the location information relating to existing utility services, facilities, or structures that may be

shown on the plans or encountered in the work. Any inaccuracy or omission in such information shall not relieve the Contractor of his/her responsibility to protect such existing features from damage or unscheduled interruption of service.

It is further understood and agreed that the Contractor shall, upon execution of the contract, notify the owners of all utility services or other facilities of his/her plan of operations. Such notification shall be in writing addressed to THE PERSON TO CONTACT as provided hereinbefore in this subsection and the subsection titled **RESTORATION OF SURFACES DISTURBED BY OTHERS** of this section. A copy of each notification shall be given to the Engineer.

In addition to the general written notification hereinbefore provided, it shall be the responsibility of the Contractor to keep such individual owners advised of changes in his/her plan of operations that would affect such owners.

Prior to commencing the work in the general vicinity of an existing utility service or facility, the Contractor shall again notify each such owner of his/her plan of operation. If, in the Contractor's opinion, the owner's assistance is needed to locate the utility service or facility or the presence of a representative of the owner is desirable to observe the work, such advice should be included in the notification. Such notification shall be given by the most expeditious means to reach the utility owner's PERSON TO CONTACT no later than two normal business days prior to the Contractor's commencement of operations in such general vicinity. The Contractor shall furnish a written summary of the notification to the Engineer.

The Contractor's failure to give the two day's notice herein above provided shall be cause for the Engineer to suspend the Contractor's operations in the general vicinity of a utility service or facility.

Where the outside limits of an underground utility service have been located and staked on the ground, the Contractor shall be required to use excavation methods acceptable to the Engineer within 3 feet of such outside limits at such points as may be required to ensure protection from damage due to the Contractor's operations.

Should the Contractor damage or interrupt the operation of a utility service or facility by accident or otherwise, he shall immediately notify the proper authority and the Engineer and shall take all reasonable measures to prevent further damage or interruption of service. The Contractor, in such events, shall cooperate with the utility service or facility owner and the Engineer continuously until such damage has been repaired and service restored to the satisfaction of the utility or facility owner.

The Contractor shall bear all costs of damage and restoration of service to any utility service or facility due to his/her operations whether or not due to negligence or accident. The contract owner reserves the right to deduct such costs from any monies due or which may become due the Contractor, or his/her surety.

70-16 FURNISHING RIGHTS-OF-WAY. The owner will be responsible for furnishing all rights-of-way upon which the work is to be constructed in advance of the Contractor's operations.

70-17 PERSONAL LIABILITY OF PUBLIC OFFICIALS. In carrying out any of the contract provisions or in exercising any power or authority granted to him by this contract, there shall be no liability upon the Engineer, his/her authorized representatives, or any officials of the owner either personally or as an official of the owner. It is understood that in such matters they act solely as agents and representatives of the owner.

70-18 NO WAIVER OF LEGAL RIGHTS. Upon completion of the work, the owner will expeditiously make final inspection and notify the Contractor of final acceptance. Such final acceptance, however, shall not preclude or estop the owner from correcting any measurement, estimate, or certificate made before or after completion of the work, nor shall the owner be precluded or estopped from recovering from the Contractor or his/her surety, or both, such overpayment as may be sustained, or by failure on the part of the Contractor to fulfill his/her obligations under the contract. A waiver on the part of the owner of any breach of any part of the contract shall not be held to be a waiver of any other or subsequent breach.

The Contractor, without prejudice to the terms of the contract, shall be liable to the owner for latent defects, fraud, or such gross mistakes as may amount to fraud, or as regards the owner's rights under any warranty or guaranty.

70-19 ENVIRONMENTAL PROTECTION. The Contractor shall comply with all Federal, state, and local laws and regulations controlling pollution of the environment. He shall take necessary precautions to prevent pollution of streams, lakes, ponds, and reservoirs with fuels, oils, bitumens, chemicals, or other harmful materials and to prevent pollution of the atmosphere from particulate and gaseous matter.

70-20 ARCHAEOLOGICAL AND HISTORICAL FINDINGS. Unless otherwise specified in this subsection, the Contractor is advised that the site of the work is not within any property, district, or site, and does not contain any building, structure, or object listed in the current National Register of Historic Places published by the United States Department of Interior.

Should the Contractor encounter, during his/her operations, any building, part of a building, structure, or object which is incongruous with its surroundings, he shall immediately cease operations in that location and notify the Engineer. The Engineer will immediately investigate the Contractor's finding and will direct the Contractor to either resume his/her operations or to suspend operations as directed.
Should the Engineer order suspension of the Contractor's operations in order to protect an archaeological or historical finding, or order the Contractor to perform extra work, such shall be covered by an appropriate contract modification (change order or supplemental agreement) as provided in the subsection titled **EXTRA WORK** of Section 40 and the subsection titled **PAYMENT FOR EXTRA WORK AND FORCE ACCOUNT WORK** of

Section 90. If appropriate, the contract modification shall include an extension of contract time in accordance with the subsection titled **DETERMINATION AND EXTENSION OF CONTRACT TIME** of Section 80.

END OF SECTION 70

SECTION 80: PROSECUTION AND PROGRESS

80-01 SUBLETTING OF CONTRACT. The owner will not recognize any subcontractor on the work. The Contractor shall at all times when work is in progress be represented either in person, by a qualified superintendent, or by other designated, qualified representative who is duly authorized to receive and execute orders of the Engineer.

Should the Contractor elect to assign his/her contract, said assignment shall be concurred in by the surety, shall be presented for the consideration and approval of the owner, and shall be consummated only on the written approval of the owner. In case of approval, the Contractor shall file copies of all subcontracts with the Engineer.

80-02 NOTICE TO PROCEED. The notice to proceed shall state the date on which it is expected the Contractor will begin the construction and from which date contract time will be charged. The Contractor shall begin the work to be performed under the contract within 10 days of the date set by the Engineer in the written notice to proceed, but in any event, the Contractor shall notify the Engineer at least 24 hours in advance of the time actual construction operations will begin.

80-03 PROSECUTION AND PROGRESS. Unless otherwise specified, the Contractor shall submit his/her progress schedule for the Engineer's approval within 10 days after the effective date of the notice to proceed. The Contractor's progress schedule, when approved by the Engineer, may be used to establish major construction operations and to check on the progress of the work. The Contractor shall provide sufficient materials, equipment, and labor to guarantee the completion of the project in accordance with the plans and specifications within the time set forth in the proposal.

If the Contractor falls significantly behind the submitted schedule, the Contractor shall, upon the Engineer's request, submit a revised schedule for completion of the work within the contract time and modify his/her operations to provide such additional materials, equipment, and labor necessary to meet the revised schedule. Should the prosecution of the work be discontinued for any reason, the Contractor shall notify the Engineer at least 24 hours in advance of resuming operations.

For AIP contracts, the Contractor shall not commence any actual construction prior to the date on which the notice to proceed is issued by the owner.

80-04 LIMITATION OF OPERATIONS. The Contractor shall control his/her operations and the operations of his/her subcontractors and all suppliers so as to provide for the free and unobstructed movement of aircraft in the AIR OPERATIONS AREAS of the airport.

When the work requires the Contractor to conduct his/her operations within an AIR OPERATIONS AREA of the airport, the work shall be coordinated with airport management (through the Engineer) at least 48 hours prior to commencement of such work. The Contractor shall not close an AIR OPERATIONS AREA until so authorized by the Engineer and until the

necessary temporary marking and associated lighting is in place as provided in the subsection titled **BARRICADES, WARNING SIGNS, AND HAZARD MARKINGS** of Section 70.

When the contract work requires the Contractor to work within an AIR OPERATIONS AREA of the airport on an intermittent basis (intermittent opening and closing of the AIR OPERATIONS AREA), the Contractor shall maintain constant communications as hereinafter specified; immediately obey all instructions to vacate the AIR OPERATIONS AREA; immediately obey all instructions to resume work in such AIR OPERATIONS AREA. Failure to maintain the specified communications or to obey instructions shall be cause for suspension of the Contractor's operations in the AIR OPERATIONS AREA until the satisfactory conditions are provided. The following AIR OPERATIONS AREA (AOA) cannot be closed to operating aircraft to permit the Contractor's operations on a continuous basis and will therefore be closed to aircraft operations intermittently as follows:

N/A

80-05 CHARACTER OF WORKERS, METHODS, AND EQUIPMENT. The Contractor shall, at all times, employ sufficient labor and equipment for prosecuting the work to full completion in the manner and time required by the contract, plans, and specifications.

All workers shall have sufficient skill and experience to perform properly the work assigned to them. Workers engaged in special work or skilled work shall have sufficient experience in such work and in the operation of the equipment required to perform the work satisfactorily.

All equipment which is proposed to be used on the work shall be of sufficient size and in such mechanical condition as to met requirements of the work and to produce a satisfactory quality of work. Equipment used on any portion of the work shall be such that no injury to previously completed work, adjacent property, or existing airport facilities will result from its use.

When the methods and equipment to be used by the Contractor in accomplishing the work are not prescribed in the contract, the Contractor is free to use any methods or equipment that will accomplish the work in conformity with the requirements of the contract, plans, and specifications.

When the contract specifies the use of certain methods and equipment, such methods and equipment shall be used unless others are authorized by the Engineer. If the Contractor desires to use a method or type of equipment other than specified in the contract, he may request authority from the Engineer to do so. The request shall be in writing and shall include a full description of the methods and equipment proposed and of the reasons for desiring to make the change. If approval is given, it will be on the condition that the Contractor will be fully responsible for producing work in conformity with contract requirements. If, after trial use of the substituted methods or equipment, the Engineer determines that the work produced does not meet contract requirements, the Contractor shall discontinue the use of the substitute method or equipment and shall complete the remaining work with the specified methods and equipment. The Contractor shall remove any deficient work and replace it with work of specified quality, or take such other corrective action as the Engineer may direct. No change will be made in basis of

payment for the contract items involved nor in contract time as a result of authorizing a change in methods or equipment under this subsection.

80-06 TEMPORARY SUSPENSION OF THE WORK. The Engineer shall have the authority to suspend the work wholly, or in part, for such period or periods as he may deem necessary, due to unsuitable weather, or such other conditions as are considered unfavorable for the prosecution of the work, or for such time as is necessary due to the failure on the part of the Contractor to carry out orders given or perform any or all provisions of the contract.

In the event that the Contractor is ordered by the Engineer, in writing, to suspend work for some unforeseen cause not otherwise provided for in the contract and over which the Contractor has no control, the Contractor may be reimbursed for actual money expended on the work during the period of shutdown. No allowance will be made for anticipated profits. The period of shutdown shall be computed from the effective date of the Engineer's order to suspend work to the effective date of the Engineer's order to resume the work. Claims for such compensation shall be filed with the Engineer within the time period stated in the Engineer's order to resume work. The Contractor shall submit with his/her claim information substantiating the amount shown on the claim. The Engineer will forward the Contractor's claim to the owner for consideration in accordance with local laws or ordinances. No provision of this article shall be construed as entitling the Contractor to compensation for delays due to inclement weather, for suspensions made at the request of the Contractor, or for any other delay provided for in the contract, plans, or specifications.

If it should become necessary to suspend work for an indefinite period, the Contractor shall store all materials in such manner that they will not become an obstruction nor become damaged in any way. He shall take every precaution to prevent damage or deterioration of the work performed and provide for normal drainage of the work. The Contractor shall erect temporary structures where necessary to provide for traffic on, to, or from the airport.

80-07 DETERMINATION AND EXTENSION OF CONTRACT TIME. The number of calendar or working days allowed for completion of the work shall be stated in the proposal and contract and shall be known as the CONTRACT TIME.

Should the contract time require extension for reasons beyond the Contractor's control, it shall be adjusted as follows:

CONTRACT TIME based on CALENDAR DAYS shall be calculated weekly by the Engineer. The Engineer will furnish the Contractor a copy of his/her weekly statement of the number of working days charged against the contract time during the week and the number of working days currently specified for completion of the contract (the original contract time plus the number of working days, if any, that have been included in approved CHANGE ORDERS or SUPPLEMENTAL AGREEMENTS covering EXTRA WORK).

The Engineer shall base his/her weekly statement of contract time charged on the following considerations:

(1) No time shall be charged for days on which the Contractor is unable to proceed with the principal item of work under construction at the time for at least 6 hours with the normal work force employed on such principal item. Should the normal work force be on a double-shift, 12 hours shall be used. Should the normal work force be on a triple-shift, 18 hours shall apply. Conditions beyond the Contractor's control such as strikes, lockouts, unusual delays in transportation, temporary suspension of the principal item of work under construction or temporary suspension of the entire work which have been ordered by the Engineer for reasons not the fault of the Contractor, shall not be charged against the contract time.

(2) The Engineer will not make charges against the contract time prior to the effective date of the notice to proceed.

(3) The Engineer will begin charges against the contract time on the first working day after the effective date of the notice to proceed.

(4) The Engineer will not make charges against the contract time after the date of final acceptance as defined in the subsection titled **FINAL ACCEPTANCE** of Section 50.

(5) The Contractor will be allowed 1 week in which to file a written protest setting forth his/her objections to the Engineer's weekly statement. If no objection is filed within such specified time, the weekly statement shall be considered as acceptable to the Contractor.

The contract time (stated in the proposal) is based on the originally estimated quantities as described in the subsection titled **INTERPRETATION OF ESTIMATED PROPOSAL QUANTITIES** of Section 20. Should the satisfactory completion of the contract require performance of work in greater quantities than those estimated in the proposal, the contract time shall be increased in the same proportion as the cost of the actually completed quantities bears to the cost of the originally estimated quantities in the proposal. Such increase in contract time shall not consider either the cost of work or the extension of contract time that has been covered by change order or supplemental agreement and shall be made at the time of final payment.

b. CONTRACT TIME based on CALENDAR DAYS shall consist of the number of calendar days stated in the contract counting from the effective date of the notice to proceed and including all Saturdays, Sundays, holidays, and non-work days. All calendar days elapsing between the effective dates of the Engineer's orders to suspend and resume all work, due to causes not the fault of the Contractor, shall be excluded.

At the time of final payment, the contract time shall be increased in the same proportion as the cost of the actually completed quantities bears to the cost of the originally estimated quantities in the proposal. Such increase in the contract time shall not consider either cost of work or the extension of contract time that has been covered by a change order or supplemental agreement. Charges against the contract time will cease as of the date of final acceptance.

c. When the contract time is a specified completion date, it shall be the date on which all contract work shall be substantially completed.

If the Contractor finds it impossible for reasons beyond his/her control to complete the work within the contract time as specified, or as extended in accordance with the provisions of this subsection, he may, at any time prior to the expiration of the contract time as extended, make a written request to the Engineer for an extension of time setting forth the reasons which he believes will justify the granting of his/her request. The Contractor's plea that insufficient time was specified is not a valid reason for extension of time. If the Engineer finds that the work was delayed because of conditions beyond the control and without the fault of the Contractor, he may extend the time for completion in such amount as the conditions justify. The extended time for completion shall then be in full force and effect, the same as though it were the original time for completion.

80-08 FAILURE TO COMPLETE ON TIME. For each calendar day or working day, as specified in the contract, that any work remains uncompleted after the contract time (including all extensions and adjustments as provided in the subsection titled **DETERMINATION AND EXTENSION OF CONTRACT TIME** of this Section) the sum specified in the contract and proposal as liquidated damages will be deducted from any money due or to become due the Contractor or his/her surety. Such deducted sums shall not be deducted as a penalty but shall be considered as liquidation of a reasonable portion of damages that will be incurred by the owner should the Contractor fail to complete the work in the time provided in his/her contract.

Permitting the Contractor to continue and finish the work or any part of it after the time fixed for its completion, or after the date to which the time for completion may have been extended, will in no way operate as a wavier on the part of the owner of any of its rights under the contract.

80-09 DEFAULT AND TERMINATION OF CONTRACT. The Contractor shall be considered in default of his/her contract and such default will be considered as cause for the owner to terminate the contract for any of the following reasons if the Contractor:

a. Fails to begin the work under the contract within the time specified in the Notice to Proceed.

b. Fails to perform the work or fails to provide sufficient workers, equipment or materials to assure completion of work in accordance with the terms of the contract, or

c. Performs the work unsuitably or neglects or refuses to remove materials or to perform anew such work as may be rejected as unacceptable and unsuitable, or

d. Discontinues the prosecution of the work, or

e. Fails to resume work which has been discontinued within a reasonable time after notice to do so, or

f. Becomes insolvent or is declared bankrupt, or commits any act of bankruptcy or insolvency, or

g. Allows any final judgment to stand against him unsatisfied for a period of 10 days, or

h. Makes an assignment for the benefit of creditors, or

i. For any other cause whatsoever, fails to carry on the work in an acceptable manner.

Should the Engineer consider the Contractor in default of the contract for any reason hereinbefore, he shall immediately give written notice to the Contractor and the Contractor's surety as to the reasons for considering the Contractor in default and the owner's intentions to terminate the contract.

If the Contractor or surety, within a period of 10 days after such notice, does not proceed in accordance therewith, then the owner will, upon written notification from the Engineer of the facts of such delay, neglect, or default and the Contractor's failure to comply with such notice, have full power and authority without violating the contract, to take the prosecution of the work out of the hands of the Contractor. The owner may appropriate or use any or all materials and equipment that have been mobilized for use in the work and are acceptable and may enter into an agreement for the completion of said contract according to the terms and provisions thereof, or use such other methods as in the opinion of the Engineer will be required for the completion of said contract in an acceptable manner.

All costs and charges incurred by the owner, together with the cost of completing the work under contract, will be deducted from any monies due or which may become due the Contractor. If such expense exceeds the sum which would have been payable under the contract, then the Contractor and the surety shall be liable and shall pay to the owner the amount of such excess.

80-10 TERMINATION FOR NATIONAL EMERGENCIES. The owner shall terminate the contract or portion thereof by written notice when the Contractor is prevented from proceeding with the construction contract as a direct
result of an Executive Order of the President with respect to the prosecution of war or in the interest of national defense.

When the contract, or any portion thereof, is terminated before completion of all items of work in the contract, payment will be made for the actual number of units or items of work completed at the contract price or as mutually agreed for items of work partially completed or not started. **No claims or loss of anticipated profits shall be considered.**

Reimbursement for organization of the work, and other overhead expenses, (when not otherwise included in the contract) and moving equipment and materials to and from the job will be considered, the intent being that an equitable settlement will be made with the Contractor.

Acceptable materials, obtained or ordered by the Contractor for the work and that are not incorporated in the work shall, at the option of the Contractor, be purchased from the Contractor at actual cost as shown by receipted bills and actual cost records at such points of delivery as may be designated by the Engineer.

Termination of the contract or a portion thereof shall neither relieve the Contractor of his/her responsibilities for the completed work nor shall it relieve his/her surety of its obligation for and concerning any just claim arising out of the work performed.

END OF SECTION 80

SECTION 90: MEASUREMENT AND PAYMENT

90-01 MEASUREMENT OF QUANTITIES. All work completed under the contract will be measured by the Engineer, or his/her authorized representatives, using United States Customary Units of Measurement or the International System of Units.

The method of measurement and computations to be used in determination of quantities of material furnished and of work performed under the contract will be those methods generally recognized as conforming to good engineering practice.

Unless otherwise specified, longitudinal measurements for area computations will be made horizontally, and no deductions will be made for individual fixtures (or leave-outs) having an area of 9 square feet or less. Unless otherwise specified, transverse measurements for area computations will be the neat dimensions shown on the plans or ordered in writing by the Engineer.

Structures will be measured according to neat lines shown on the plans or as altered to fit field conditions.

Unless otherwise specified, all contract items which are measured by the linear foot such as electrical ducts, conduits, pipe culverts, under drains, and similar items shall be measured parallel to the base or foundation upon which such items are placed.

In computing volumes of excavation the average end area method or other acceptable methods will be used.

The thickness of plates and galvanized sheet used in the manufacture of corrugated metal pipe, metal plate pipe culverts and arches, and metal cribbing will be specified and measured in decimal fraction of inches.

The term "ton" will mean the short ton consisting of 2,000 pounds (907 kilograms) avoirdupois. All materials which are measured or proportioned by weights shall be weighed on accurate, approved scales by competent, qualified personnel at locations designed by the Engineer. If material is shipped by rail, the car weight may be accepted provided that only the actual weight of material be paid for. However, car weights will not be acceptable for material to be passed through mixing plants. Trucks used to haul material being paid for by weight shall be weighed empty daily at such times as the Engineer directs, and each truck shall bear a plainly legible identification mark.

Materials to be measured by volume in the hauling vehicle shall be hauled in approved vehicles and measured therein at the point of delivery. Vehicles for this purpose may be of any size or type acceptable to the Engineer, provided that the body is of such shape that the actual contents may be readily and accurately determined. All vehicles shall be loaded to at least their water level capacity, and all loads shall be leveled when the vehicles arrive at the point of delivery.

When requested by the Contractor and approved by the Engineer in writing, material specified to be measured by the cubic yard may be weighed, and such weights will be converted to cubic yards for payment purposes. Factors for conversion from weight measurement to volume measurement will be determined by the Engineer and shall be agreed to by the Contractor before such method of measurement of pay quantities is used.

Bituminous materials will be measured by the gallon (liter) or ton (kilogram). When measured by volume, such volumes will be measured at 60 F (15 C) or will be corrected to the volume at 60 F (15 C) using ASTM D 1250 for asphalts or ASTM D 633 for tars.

Net certified scale weights or weights based on certified volumes in the case of rail shipments will be used as a basis of measurement, subject to correction when bituminous material has been lost from the car or the distributor, wasted, or otherwise not incorporated in the work.

When bituminous materials are shipped by truck or transport, net certified weights by volume, subject to correction for loss or foaming, may be used for computing quantities.

Cement will be measured by the ton (kilogram) or hundredweight (kilogram).
Timber will be measured by the thousand feet board measure (M.F.B.M.) actually incorporated in the structure. Measurement will be based on nominal widths and thicknesses and the extreme length of each piece.

The term lump sum when used as an item of payment will mean complete payment for the work described in the contract.

Rental of equipment will be measured by time in hours of actual working time and necessary traveling time of the equipment within the limits of the work. Special equipment ordered by the Engineer in connection with force account work will be measured as agreed in the change order or supplemental agreement authorizing such force account work as provided in the subsection titled **PAYMENT FOR EXTRA AND FORCE ACCOUNT WORK** of this section.

When standard manufactured items are specified such as fence, wire, plates, rolled shapes, pipe conduit, etc., and these items are identified by gage, unit weight, section dimensions, etc., such identification will be considered to be nominal weights or dimensions. Unless more stringently controlled by tolerances in cited specifications, manufacturing tolerances established by the industries involved will be accepted.

Scales for weighing materials which are required to be proportioned or measured and paid for by weight shall be furnished, erected, and maintained by the Contractor, or be certified permanently installed commercial scales.

Scales shall be accurate within one-half percent of the correct weight throughout the range of use. The Contractor shall have the scales checked under the observation of the inspector before beginning work and at such other times as requested. The intervals shall be uniform in spacing throughout the graduated or marked length of the beam or dial and shall not exceed one-tenth of

1 percent of the nominal rated capacity of the scale, but not less than 1 pound (454 grams). The use of spring balances will not be permitted.

Beams, dials, platforms, and other scale equipment shall be so arranged that the operator and the inspector can safely and conveniently view them.

Scale installations shall have available ten standard 50-pound (2.3 kilogram) weights for testing the weighing equipment or suitable weights and devices for other approved equipment.

Scales must be tested for accuracy and serviced before use at a new site. Platform scales shall be installed and maintained with the platform level and rigid bulkheads at each end.

Scales "overweighing" (indicating more than correct weight) will not be permitted to operate, and all materials received subsequent to the last previous correct weighting-accuracy test will be reduced by the percentage of error in excess of one-half of 1 percent.

In the event inspection reveals the scales have been "under weighing" (indicating less than correct weight), they shall be adjusted, and no additional payment to the Contractor will be allowed for materials previously weighed and recorded.

All costs in connection with furnishing, installing, certifying, testing, and maintaining scales; for furnishing check weights and scale house; and for all other items specified in this subsection, for the weighing of materials for proportioning or payment, shall be included in the unit contract prices for the various items of the project.

When the estimated quantities for a specific portion of the work are designated as the pay quantities in the contract, they shall be the final quantities for which payment for such specific portion of the work will be made, unless the dimensions of said portions of the work shown on the plans are revised by the Engineer. If revised dimensions result in an increase or decrease in the quantities of such work, the final quantities for payment will be revised in the amount represented by the authorized changes in the dimensions.

90-02 SCOPE OF PAYMENT. The Contractor shall receive and accept compensation provided for in the contract as full payment for furnishing all materials, for performing all work under the contract in a complete and acceptable manner, and for all risk, loss, damage, or expense of whatever character arising out of the nature of the work or the prosecution thereof, subject to the provisions of the subsection titled **NO WAIVER OF LEGAL RIGHTS** of Section 70.

When the "basis of payment" subsection of a technical specification requires that the contract price (price bid) include compensation for certain work or material essential to the item, this same work or material will not also be measured for payment under any other contract item which may appear elsewhere in the contract, plans, or specifications.

90-03 COMPENSATION FOR ALTERED QUANTITIES. When the accepted quantities of work vary from the quantities in the proposal, the Contractor shall accept as payment in full, so

far as contract items are concerned, payment at the original contract price for the accepted quantities of work actually completed and accepted. No allowance, except as provided for in the subsection titled **ALTERATION OF WORK AND QUANTITIES** of Section 40 will be made for any increased expense, loss of expected reimbursement, or loss of anticipated profits suffered or claimed by the Contractor which results directly from such alterations or indirectly from his/her unbalanced allocation of overhead and profit among the contract items, or from any other cause.

90-04 PAYMENT FOR OMITTED ITEMS. As specified in the subsection titled **OMITTED ITEMS** of Section 40, the Engineer shall have the right to omit from the work (order nonperformance) any contract item, except major contract items, in the best interest of the owner.

Should the Engineer omit or order nonperformance of a contract item or portion of such item from the work, the Contractor shall accept payment in full at the contract prices for any work actually completed and acceptable prior to the Engineer's order to omit or non-perform such contract item.

Acceptable materials ordered by the Contractor or delivered on the work prior to the date of the Engineer's order will be paid for at the actual cost to the Contractor and shall thereupon become the property of the owner.

In addition to the reimbursement hereinbefore provided, the Contractor shall be reimbursed for all actual costs incurred for the purpose of performing the omitted contract item prior to the date of the Engineer's order. Such additional costs incurred by the Contractor must be directly related to the deleted contract item and shall be supported by certified statements by the Contractor as to the nature the amount of such costs.

90-05 PAYMENT FOR EXTRA AND FORCE ACCOUNT WORK. Extra work, performed in accordance with the subsection titled EXTRA WORK of Section 40, will be paid for at the contract prices or agreed prices specified in the change order or supplemental agreement authorizing the extra work. When the change order or supplemental agreement authorizing the extra work requires that it be done by force account, such force account shall be measured and paid for based on expended labor, equipment, and materials plus a negotiated and agreed upon allowance for overhead and profit.

a. **Miscellaneous**. No additional allowance will be made for general superintendence, the use of small tools, or other costs for which no specific allowance is herein provided.

b. **Comparison of Record**. The Contractor and the Engineer shall compare records of the cost of force account work at the end of each day. Agreement shall be indicated by signature of the Contractor and the Engineer or their duly authorized representatives.

c. **Statement**. No payment will be made for work performed on a force account

basis until the Contractor has furnished the Engineer with duplicate itemized statements of the cost of such force account work detailed as follows:

(1) Name, classification, date, daily hours, total hours, rate and extension for each laborer and foreman..

(2) Designation, dates, daily hours, total hours, rental rate, and extension for each unit of machinery and equipment.

(3) Quantities of materials, prices, and extensions.

(4) Transportation of materials.

(5) Cost of property damage, liability and workman's compensation insurance premiums, unemployment insurance contributions, and social security tax.

Statements shall be accompanied and supported by a receipted invoice for all materials used and transportation charges. However, if materials used on the force account work are not specifically purchased for such work but are taken from the Contractor's stock, then in lieu of the invoices the Contractor shall furnish an affidavit certifying that such materials were taken from his/her stock, that the quantity claimed was actually used, and that the price and transportation claimed represent the actual cost to the Contractor.

90-06 PARTIAL PAYMENTS. Partial payments will be made at least once each month as the work progresses. Said payments will be based upon estimates prepared by the Engineer of the value of the work performed and materials complete in place in accordance with the contract, plans, and specifications. Such partial payments may also include the delivered actual cost of those materials stockpiled and stored in accordance with the subsection titled **PAYMENT FOR MATERIALS ON HAND** of this section.

No partial payment will be made when the amount due the Contractor since the last estimate amounts to less than five hundred dollars.

From the total of the amount determined to be payable on a partial payment, 10 percent of such total amount will be deducted and retained by the owner until the final payment is made, except as may be provided (at the Contractor's option) in the subsection titled **PAYMENT OF WITHHELD FUNDS** of this section. The balance (90 percent) of the amount payable, less all previous payments, shall be certified for payment. Should the Contractor exercise his/her option, as provided in the subsection titled **PAYMENT OF WITHHELD FUNDS** of this section, no such 10 percent retainage shall be deducted.

When not less than 95 percent of the work has been completed the Engineer may, at his/her discretion and with the consent of the surety, prepare an estimate from which will be retained an amount not less than twice the contract value or estimated cost, whichever is greater, of the work remaining to be done. The remainder, less all previous payments and deductions, will then be certified for payment to the Contractor.

It is understood and agreed that the Contractor shall not be entitled to demand or receive partial payment based on quantities of work in excess of those provided in the proposal or covered by approved change orders or supplemental agreements, except when such excess quantities have been determined by the Engineer to be a part of the final quantity for the item of work in question.

No partial payment shall bind the owner to the acceptance of any materials or work in place as to quality or quantity. All partial payments are subject to correction at the time of final payment as provided in the subsection titled **ACCEPTANCE AND FINAL PAYMENT** of this section.

90-07 PAYMENT FOR MATERIALS ON HAND. Partial payments may be made to the extent of the delivered cost of materials to be incorporated in the work, provided that such materials meet the requirements of the contract, plans, and specifications and are delivered to acceptable sites on the airport property or at other sites in the vicinity that are acceptable to the owner. Such delivered costs of stored or stockpiled materials may be included in the next partial payment after the following conditions are met:

a. The material has been stored or stockpiled in a manner acceptable to the Engineer at or on an approved site.

b. The Contractor has furnished the Engineer with acceptable evidence of the quantity and quality of such stored or stockpiled materials.

c. The Contractor has furnished the Engineer with satisfactory evidence that the material and transportation costs have been paid.

d. The Contractor has furnished the owner legal title (free of liens or encumbrances of any kind) to the material so stored or stockpiled.

e. The Contractor has furnished the owner evidence that the material so stored or stockpiled is insured against loss by damage to or disappearance of such materials at anytime prior to use in the work.

It is understood and agreed that the transfer of title and the owner's payment for such stored or stockpiled materials shall in no way relieve the Contractor of his/her responsibility for furnishing and placing such materials in accordance with the requirements of the contract, plans, and specifications.

In no case will the amount of partial payments for materials on hand exceed the contract price for such materials or the contract price for the contract item in which the material is intended to be used.

No partial payment will be made for stored or stockpiled living or perishable plant materials. The Contractor shall bear all costs associated with the partial payment of stored or stockpiled materials in accordance with the provisions of this subsection.

90-08 PAYMENT OF WITHHELD FUNDS. At the Contractor's option, he/she may request that the owner accept (in lieu of the 10 percent retainage on partial payments described in the subsection titled PARTIAL PAYMENTS of this section) the Contractor's deposits in escrow under the following conditions.

a. The Contractor shall bear all expenses of establishing and maintaining an escrow account and escrow agreement acceptable to the owner.

b. The Contractor shall deposit to and maintain in such escrow only those securities or bank certificates of deposit as are acceptable to the owner and having a value not less than the 10 percent retainage that would otherwise be withheld from partial payment.

c. The Contractor shall enter into an escrow agreement satisfactory to the owner.

d. The Contractor shall obtain the written consent of the surety to such agreement.

90-09 ACCEPTANCE AND FINAL PAYMENT. When the contract work has been accepted in accordance with the requirements of the subsection titled FINAL ACCEPTANCE of Section 50, the Engineer will prepare the final estimate of the items of work actually performed. The Contractor shall approve the Engineer's final estimate or advise the Engineer of his/her objections to the final estimate which are based on disputes in measurements or computations of the final quantities to be paid under the contract as amended by change order or supplemental agreement. The Contractor and the Engineer shall resolve all disputes (if any) in the measurement and computation of final quantities to be paid within 30 calendar days of the Contractor's receipt of the Engineer's final estimate. If, after such 30-day period, a dispute still exists, the Contractor may approve the Engineer's estimate under protest of the quantities in dispute, and such disputed quantities shall be considered by the owner as a claim in accordance with the subsection titled **CLAIMS FOR ADJUSTMENT AND DISPUTES** of Section 50.

After the Contractor has approved, or approved under protest, the Engineer's final estimate, final payment will be processed based on the entire sum, or the undisputed sum in case of approval under protest, determined to be due the Contractor less all previous payments and all amounts to be deducted under the provisions of the contract. All prior partial estimates and payments shall be subject to correction in the final estimate and payment.

If the Contractor has filed a claim for additional compensation under the provisions of the subsection titled **CLAIMS FOR ADJUSTMENTS AND DISPUTES** of Section 50 or under the provisions of this subsection, such claims will be considered by the owner in accordance with local laws or ordinances. Upon final adjudication of such claims, any additional payment determined to be due the Contractor will be paid pursuant to a supplemental final estimate.

END OF SECTION 90

SECTION 100: CONTRACTOR QUALITY CONTROL PROGRAM

100-01 GENERAL. When the specifications require a Contractor Quality Control Program, the Contractor shall establish, provide, and maintain an effective Quality Control Program that details the methods and procedures that will be taken to assure that all materials and completed construction conform to contract plans, technical specifications and other requirements, whether manufactured by the Contractor, or procured from subcontractors or vendors. Although guidelines are established and certain minimum requirements are specified herein and elsewhere in the contract technical specifications, the Contractor shall assume full responsibility for accomplishing the stated purpose.

The intent of this section is to enable the Contractor to establish a necessary level of control that will:

a. Adequately provide for the production of acceptable quality materials.

b. Provide sufficient information to assure both the Contractor and the Engineer that the specification requirements can be met.

c. Allow the Contractor as much latitude as possible to develop his or her own standard of control.

The Contractor shall be prepared to discuss and present, at the preconstruction conference, his/her understanding of the quality control requirements. The Contractor shall not begin any construction or production of materials to be incorporated into the completed work until the Quality Control Program has been reviewed by the Engineer. No partial payment will be made for materials subject to specific quality control requirements until the Quality Control Program has been reviewed.

The quality control requirements contained in this section and elsewhere in the contract technical specifications are in addition to and separate from the acceptance testing requirements. Acceptance testing requirements are the responsibility of the Engineer.

100-02 DESCRIPTION OF PROGRAM.

a. General Description. The Contractor shall establish a Quality Control Program to perform inspection and testing of all items of work required by the technical specifications, including those performed by subcontractors. This Quality Control Program shall ensure conformance to applicable specifications and plans with respect to materials, workmanship, construction, finish, and functional performance. The Quality Control Program shall be effective for control of all construction work performed under this Contract and shall specifically include surveillance and tests required by the technical specifications, in addition to other requirements of this section and any other activities deemed necessary by the Contractor to establish an effective level of quality control.

b. Quality Control Program. The Contractor shall describe the Quality Control Program in a written document which shall be reviewed by the Engineer prior to the start of any production, construction, or off-site fabrication. The written Quality Control Program shall be submitted to the Engineer for review at least 14 calendar days before the pre-construction conference.

The Quality Control Program shall be organized to address, as a minimum, the following items:

a. Quality control organization;

b. Project progress schedule;

c. Submittals schedule;

d. Inspection requirements;

e. Quality control testing plan;

f. Documentation of quality control activities; and

g. Requirements for corrective action when quality control and/or acceptance criteria are not met.

The Contractor is encouraged to add any additional elements to the Quality Control Program that he/she deems necessary to adequately control all production and/or construction processes required by this contract.

100-03 QUALITY CONTROL ORGANIZATION. The Contractor's Quality Control Program shall be implemented by the establishment of a separate quality control organization. An organizational chart shall be developed to show all quality control personnel and how these personnel integrate with other management/production and construction functions and personnel.

The organizational chart shall identify all quality control staff by name and function, and shall indicate the total staff required to implement all elements of the Quality Control Program, including inspection and testing for each item of work. If necessary, different technicians can be utilized for specific inspection and testing functions for different items of work. If an outside organization or independent testing laboratory is used for implementation of all or part of the Quality Control Program, the personnel assigned shall be subject to the qualification requirements of paragraph 100-03a and 100-03b. The organizational chart shall indicate which personnel are Contractor employees and which are provided by an outside organization.

The quality control organization shall consist of the following minimum personnel:

a. Program Administrator. The Program Administrator shall be a full-time employee of the Contractor, or a consultant engaged by the Contractor. The Program Administrator shall have a

minimum of 5 years of experience in airport and/or highway construction and shall have had prior quality control experience on a project of comparable size and scope as the contract.

Additional qualifications for the Program Administrator shall include at least 1 of the following requirements:

(1) Professional engineer with 1 year of airport paving experience acceptable to the Engineer.

(2) Engineer-in-training with 2 years of airport paving experience acceptable to the Engineer.

(3) An individual with 3 years of highway and/or airport paving experience acceptable to the Engineer, with a Bachelor of Science Degree in Civil Engineering, Civil Engineering Technology or Construction.

(4) Construction materials technician certified at Level III by the National Institute for Certification in Engineering Technologies (NICET).

(5) Highway materials technician certified at Level III by NICET.

(6) Highway construction technician certified at Level III by NICET.

(7) A NICET certified engineering technician in Civil Engineering Technology with 5 years of highway and/or airport paving experience acceptable to the Engineer.

The Program Administrator shall have full authority to institute any and all actions necessary for the successful implementation of the Quality Control Program to ensure compliance with the contract plans and technical specifications. The Program Administrator shall report directly to a responsible officer of the construction firm. The Program Administrator may supervise the Quality Control Program on more than one project provided that person can be at the job site within 2 hours after being notified of a problem.

b. Quality Control Technicians. A sufficient number of quality control technicians necessary to adequately implement the Quality Control Program shall be provided. These personnel shall be either engineers, engineering technicians, or experienced craftsman with qualifications in the appropriate field equivalent to NICET Level II or higher construction materials technician or highway construction technician and shall have a minimum of 2 years of experience in their area of expertise.

The quality control technicians shall report directly to the Program Administrator and shall perform the following functions:

(1) Inspection of all materials, construction, plant, and equipment for conformance to the technical specifications, and as required by Section 100-06.

(2) Performance of all quality control tests as required by the technical specifications and Section 100-07.

Certification at an equivalent level, by a state or nationally recognized organization will be acceptable in lieu of NICET certification.

c. Staffing Levels. The Contractor shall provide sufficient qualified quality control personnel to monitor each work activity at all times. Where material is being produced in a plant for incorporation into the work, separate plant and field technicians shall be provided at each plant and field placement location. The scheduling and coordinating of all inspection and testing must match the type and pace of work activity. The Quality Control Program shall state where different technicians will be required for different work elements.

100-04 PROJECT PROGRESS SCHEDULE. The Contractor shall submit a coordinated construction schedule for all work activities. The schedule shall be prepared as a network diagram in Critical Path Method (CPM), PERT, or other format, or as otherwise specified in the contract. As a minimum, it shall provide information on the sequence of work activities, milestone dates, and activity duration.

The Contractor shall maintain the work schedule and provide an update and analysis of the progress schedule on a twice monthly basis, or as otherwise specified in the contract. Submission of the work schedule shall not relieve the Contractor of overall responsibility for scheduling, sequencing, and coordinating all work to comply with the requirements of the contract.

100-05 SUBMITTALS SCHEDULE. The Contractor shall submit a detailed listing of all submittals (e.g., mix designs, material certifications) and shop drawings required by the technical specifications. The listing can be developed in a spreadsheet format and shall include:

a. Specification item number;

b. Item description;

c. Description of submittal;

d. Specification paragraph requiring submittal; and

e. Scheduled date of submittal.

100-06 INSPECTION REQUIREMENTS. Quality control inspection functions shall be organized to provide inspections for all definable features of work, as detailed below. All inspections shall be documented by the Contractor as specified by Section 100-07.

Inspections shall be performed daily to ensure continuing compliance with contract requirements until completion of the particular feature of work. These shall include the following minimum requirements:

a. During plant operation for material production, quality control test results and periodic inspections shall be utilized to ensure the quality of aggregates and other mix components, and to adjust and control mix proportioning to meet the approved mix design and other requirements of the technical specifications. All equipment utilized in proportioning and mixing shall be inspected to ensure its proper operating condition. The Quality Control Program shall detail how these and other quality control functions will be accomplished and utilized.

b. During field operations, quality control test results and periodic inspections shall be utilized to ensure the quality of all materials and workmanship. All equipment utilized in placing, finishing, and compacting shall be inspected to ensure its proper operating condition and to ensure that all such operations are in conformance to the technical specifications and are within the plan dimensions, lines, grades, and tolerances specified. The Program shall document how these and other quality control functions will be accomplished and utilized.

100-07 QUALITY CONTROL TESTING PLAN. As a part of the overall Quality Control Program, the Contractor shall implement a quality control testing plan, as required by the technical specifications. The testing plan shall include the minimum tests and test frequencies required by each technical specification Item, as well as any additional quality control tests that the Contractor deems necessary to adequately control production and/or construction processes.

The testing plan can be developed in a spreadsheet fashion and shall, as a minimum, include the following:

a. Specification item number (e.g., P-401);

b. Item description (e.g., Plant Mix Bituminous Pavements);

c. Test type (e.g., gradation, grade, asphalt content);

d. Test standard (e.g., ASTM or AASHTO test number, as applicable);

e. Test frequency (e.g., as required by technical specifications or minimum frequency when requirements are not stated);

f. Responsibility (e.g., plant technician); and

g. Control requirements (e.g., target, permissible deviations).

The testing plan shall contain a statistically-based procedure of random sampling for acquiring test samples in accordance with ASTM D 3665. The Engineer shall be provided the opportunity to witness quality control sampling and testing.

All quality control test results shall be documented by the Contractor as required by Section 100-08.

100-08 DOCUMENTATION. The Contractor shall maintain current quality control records of all inspections and tests performed. These records shall include factual evidence that the required inspections or tests have been performed, including type and number of inspections or tests involved; results of inspections or tests; nature of defects, deviations, causes for rejection, etc.; proposed remedial action; and corrective actions taken.
These records must cover both conforming and defective or deficient features, and must include a statement that all supplies and materials incorporated in the work are in full compliance with the terms of the contract. Legible copies of these records shall be furnished to the Engineer daily. The records shall cover all work placed subsequent to the previously furnished records and shall be verified and signed by the Contractor's Program Administrator.

Specific Contractor quality control records required for the contract shall include, but are not necessarily limited to, the following records:

a. Daily Inspection Reports. Each Contractor quality control technician shall maintain a daily log of all inspections performed for both Contractor and subcontractor operations on a form acceptable to the Engineer. These technician's daily reports shall provide factual evidence that continuous quality control inspections have been performed and shall, as a minimum, include the following:

(1) Technical specification item number and description;

(2) Compliance with approved submittals;

(3) Proper storage of materials and equipment;

(4) Proper operation of all equipment;

(5) Adherence to plans and technical specifications;

(6) Review of quality control tests; and

(7) Safety inspection.

The daily inspection reports shall identify inspections conducted, results of inspections, location and nature of defects found, causes for rejection, and remedial or corrective actions taken or proposed.

The daily inspection reports shall be signed by the responsible quality control technician and the Program Administrator. The Engineer shall be provided at least one copy of each daily inspection report on the work day following the day of record.

b. Daily Test Reports. The Contractor shall be responsible for establishing a system which will record all quality control test results. Daily test reports shall document the following information:

(1) Technical specification item number and description;

(2) Test designation;

(3) Location;

(4) Date of test;

(5) Control requirements;

(6) Test results;

(7) Causes for rejection;

(8) Recommended remedial actions; and

(9) Retests.

Test results from each day's work period shall be submitted to the Engineer prior to the start of the next day's work period. When required by the technical specifications, the Contractor shall maintain statistical quality control charts. The daily test reports shall be signed by the responsible quality control technician and the Program Administrator.

100-09 CORRECTIVE ACTION REQUIREMENTS. The Quality Control Program shall indicate the appropriate action to be taken when a process is deemed, or believed, to be out of control (out of tolerance) and detail what action will be taken to bring the process into control. The requirements for corrective action shall include both general requirements for operation of the Quality Control Program as a whole, and for individual items of work contained in the technical specifications.

The Quality Control Program shall detail how the results of quality control inspections and tests will be used for determining the need for corrective action and shall contain clear sets of rules to gauge when a process is out of control and the type of correction to be taken to regain process control.

When applicable or required by the technical specifications, the Contractor shall establish and utilize statistical quality control charts for individual quality control tests. The requirements for corrective action shall be linked to the control charts.

100-10 SURVEILLANCE BY THE ENGINEER. All items of material and equipment shall be subject to surveillance by the Engineer at the point of production, manufacture or shipment to determine if the Contractor, producer, manufacturer or shipper maintains an adequate quality control system in conformance with the requirements detailed herein and the applicable technical specifications and plans. In addition, all items of materials, equipment and work in place shall be subject to surveillance by the Engineer at the site for the same purpose.

Surveillance by the Engineer does not relieve the Contractor of performing quality control inspections of either on-site or off-site Contractor's or subcontractor's work.

100-11 NONCOMPLIANCE.

a. The Engineer will notify the Contractor of any noncompliance with any of the foregoing requirements. The Contractor shall, after receipt of such notice, immediately take corrective action. Any notice, when delivered by the Engineer or his/her authorized representative to the Contractor or his/her authorized representative at the site of the work, shall be considered sufficient notice.

b. In cases where quality control activities do not comply with either the Contractor's Quality Control Program or the contract provisions, or where the Contractor fails to properly operate and maintain an effective Quality Control Program, as determined by the Engineer, the Engineer may:

(1) Order the Contractor to replace ineffective or unqualified quality control personnel or subcontractors.

(2) Order the Contractor to stop operations until appropriate corrective actions is taken.

END OF SECTION 100

DESIGN SPECIFICATIONS

for

HATTIESBURG-BOBBY L. CHAIN MUNICIPAL AIRPORT
APRON RESTORATION PART I

A.I.P Project No. 3-28-0031-0026-2018
for the
CITY OF HATTIESBURG

ITEM P-401: PLANT MIX BITUMINOUS PAVEMENTS

DESCRIPTION

401-1.1 This item shall consist of a surface course composed of mineral aggregate and bituminous material mixed in a central mixing plant and placed on a prepared course in accordance with these specifications and shall conform to the lines, grades, thicknesses, and typical cross sections shown on the plans. Each course shall be constructed to the depth, typical section, or elevation required by the plans and shall be rolled, finished, and approved before the placement of the next course.

MATERIALS

401-2.1 AGGREGATE. Aggregates shall consist of crushed stone, crushed gravel, or crushed slag with or without sand or other inert finely divided mineral aggregate. The portion of materials retained on the No. 8 sieve is coarse aggregate. The portion passing the No. 8 (2.36 mm) sieve and retained on the No. 200 (0.075 mm) sieve is fine aggregate, and the portion passing the No. 200 (0.075 mm) sieve is mineral filler.

a. Coarse Aggregate. Coarse aggregate shall consist of sound, tough, durable particles, free from adherent films of matter that would prevent thorough coating and bonding with the bituminous material and be free from organic matter and other deleterious substances. The percentage of wear shall not be greater than 40 percent when tested in accordance with ASTM C 131. The sodium sulfate soundness loss shall not exceed 10 percent, or the magnesium sulfate soundness loss shall not exceed 13 percent, after five cycles, when tested in accordance with ASTM C 88.

Aggregate shall contain at least 50 percent by weight of individual pieces having two or more fractured faces and 65 percent by weight having at least one fractured face. The area of each face shall be equal to at least 75 percent of the smallest midsectional area of the piece. When two fractured faces are contiguous, the angle between the planes of fractures shall be at least 30 degrees to count as two fractured faces. Fractured faces shall be obtained by crushing.

The aggregate shall not contain more than a total of 8 percent, by weight, of flat or elongated pieces, when tested in accordance with ASTM D 4791.

Slag shall be air-cooled, blast furnace slag, and shall have a compacted weight of not less than 70 pounds per cubic foot (1.12 mg/cubic meter) when tested in accordance with ASTM C 29.

b. Fine Aggregate. Fine aggregate shall consist of clean, sound, durable, angular shaped particles produced by crushing stone, slag, or gravel that meets the requirements for wear and soundness specified for coarse aggregate. The aggregate particles shall be free from coatings of clay, silt, or other objectionable matter and shall contain no clay balls. The fine aggregate, including any blended material for the fine aggregate, shall have a plasticity index of not more than 6 and a liquid limit of not more than 25 when tested in accordance with ASTM D 4318.

Natural (non-manufactured) sand may be used to obtain the gradation of the aggregate blend or to improve the workability of the mix. The amount of sand to be added will be adjusted to produce mixtures conforming to requirements of this specification. The fine aggregate shall not contain more than 20 percent natural sand by weight of total aggregates.

The aggregate shall have sand equivalent values of 35 or greater when tested in accordance with ASTM D 2419.

c. Sampling. ASTM D 75 shall be used in sampling coarse and fine aggregate, and ASTM C 183 shall be used in sampling mineral filler.

401-2.2 MINERAL FILLER. If filler, in addition to that naturally present in the aggregate, is necessary, it shall meet the requirements of ASTM D 242.

401-2.3 BITUMINOUS MATERIAL. Bituminous material shall conform to the following requirements: ASTM D 946, Penetration Grade 85-100.

The Contractor shall furnish vendor's certified test reports for each lot of bituminous material shipped to the project. The vendor's certified test report for the bituminous material can be used for acceptance or tested independently by the Engineer.

401-2.4 PRELIMINARY MATERIAL ACCEPTANCE. Prior to delivery of materials to the job site, the Contractor shall submit certified test reports to the Engineer for the following materials:

a. Coarse Aggregate.

(1) Percent of wear.
(2) Soundness.
(3) Unit weight of slag.

b. Fine Aggregate.

(1) Liquid limit.
(2) Plasticity index.
(3) Sand equivalent.

c. Mineral Filler.

d. Bituminous Material.

The certification(s) shall show the appropriate ASTM test(s) for each material, the test results, and a statement that the material meets the specification requirement.

The Engineer may request samples for testing, prior to and during production, to verify the quality of the materials and to ensure conformance with the applicable specifications.

COMPOSITION

401-3.1 COMPOSITION OF MIXTURE. The bituminous plant mix shall be composed of a mixture of well-graded aggregate, filler if required, and bituminous material. The several aggregate fractions shall be sized, handled in separate size groups, and combined in such proportions that the resulting mixture meets the grading requirements of the job mix formula (JMF).

401-3.2 JOB MIX FORMULA. No bituminous mixture for payment shall be produced until a job mix formula has been approved by the Engineer. The bituminous mixture shall be designed using procedures contained in Chapter III, MARSHALL METHOD OF MIX DESIGN, of the Asphalt Institute's Manual Series No. 2 (MS-2), Mix Design Methods for Asphalt Concrete, and shall meet the requirements of Tables 1 and 2.

The design criteria in Table 1 are target values necessary to meet the acceptance requirements contained in paragraph 401-5.2b. The criteria is based on a production process which has a material variability with the following standard deviations:

Stability (lbs.) = 270
Flow (0.01 inch) = 1.5
Air Voids (%) = 0.65

If material variability exceeds the standard deviations indicated, the job mix formula and subsequent production targets should be based on a stability greater than shown in Table 1, and the flow and air voids should be targeted close to the mid-range of the criteria in order to meet the acceptance requirements.

If the Tensile Strength Ratio (TSR) of the composite mixture, as determined by ASTM D 4867, is less than 75, the aggregates shall be rejected or the asphalt treated with an approved anti-stripping agent. The amount of anti-stripping agent added to the asphalt shall be sufficient to produce a TSR of not less than 75. If an antistrip agent is required, it will be provided by the Contractor at no additional cost.

The job mix formula shall be submitted in writing by the Contractor to the Engineer at least 30 days prior to the start of paving operations and shall include as a minimum:

a. Percent passing each sieve size.

b. Percent of asphalt cement.

c. Asphalt viscosity or penetration grade.

d. Number of blows of hammer compaction per side of molded specimen.

e. Mixing temperature.

f. Compaction temperature.

g. Temperature of mix when discharged from the mixer.

h. Temperature-viscosity relationship of the asphalt cement.

i. Plot of the combined gradation on the Federal Highway Administration (FHWA) 45 power gradation curve.

j. Graphical plots of stability, flow, air voids, voids in the mineral aggregate, and unit weight versus asphalt content.

k. Percent natural sand.

l. Percent fractured faces.

m. Percent elongated particles.

n. Tensile Strength Ratio (TSR).

o. Antistrip agent (if required).

The Contractor shall submit samples to the Engineer, upon request, for job mix formula verification testing.

The job mix formula for each mixture shall be in effect until modified in writing by the Engineer. Should a change in sources of materials be made, a new job mix formula must be approved by the Engineer before the new material is used.

TABLE 1. MARSHALL DESIGN CRITERIA

TEST PROPERTY	Gross Wgt. > 60,000 lbs Or Tire Pressure > 100 PSI
Number of blows	75
Stability, pounds (newtons) minimum	2150 (9555)
Flow, 0.01 in. (0.25 mm)	10-14
Air voids (percent)	2.8-4.2
Voids filled with asphalt (percent)	65-75
Percent voids in mineral aggregate, minimum	See Table 2

TABLE 2. MINIMUM PERCENT VOIDS IN MINERAL AGGREGATE

Nominal Maximum Aggregate Size 1/		Minimum Voids in Mineral Aggregate, Percent Design Air Voids
in.	mm	Percent
½	12.5	13
¾	19.5	12
1	25.0	11
1-1/4	31.25	10

1/ The nominal maximum aggregate size is the next larger sieve size than the sieve on which at least 10 percent of the total aggregate is retained.

The mineral aggregate shall be of such size that the percentage composition by weight, as determined by laboratory screens, will conform to the gradation or gradations specified in Table 3 when tested in accordance with ASTM Standard C 136 and C 117.

The gradations in Table 3 represent the limits which shall determine the suitability of aggregate for use from the sources of supply. The aggregate, as selected (and used in the JMF), shall have a gradation within the limits designated in Table 3 and shall not vary from the low limit on one sieve to the high limit on the adjacent sieve, or vice versa, but shall be well graded from coarse to fine.

Deviations from the final approved mix design for bitumen content and gradation of aggregates shall be within the action limits for individual measurements as specified in paragraph 401-6.5a. The limits still will apply if they fall outside the master grading band in Table 3.

The maximum size aggregate used shall not be more than one-half of the thickness of the course being constructed.

TABLE 3. AGGREGATE - BITUMINOUS PAVEMENTS

Sieve Size	Percentage by Weight Passing Sieves 1" max
1-1/4 in. (31.25 mm)	-
1 in. (25.0 mm)	100
¾ in. (19.0 mm)	76-98
½ in. (12.5 mm)	66-86
⅜ in. (9.5 mm)	57-77
No. 4 (4.75 mm)	40-60
No. 8 (2.36 mm)	26-46
No. 16 (1.18 mm)	17-37
No. 30 (0.60 mm)	-
No. 50 (0.30 mm)	7-19

TABLE 3. AGGREGATE - BITUMINOUS PAVEMENTS

Sieve Size	Percentage by Weight Passing Sieves 1" max
No. 100 (0.15 mm)	6-16
No. 200 (0.075 mm)	3-6
Asphalt percent	
Stone or gravel	4.5-7.0

The aggregate gradations shown are based on aggregates of uniform specific gravity. The percentages passing the various sieves shall be corrected when aggregates of varying specific gravities are used, as indicated in the Asphalt Institute Manual Series No. 2 (MS-2), Appendix A.

401-3.3 RECYCLED ASPHALT CONCRETE. Recycled asphalt concrete shall consist of reclaimed asphalt pavement (RAP), coarse aggregate, fine aggregate, mineral filler, asphalt cement, and recycling agent, if necessary. Reclaimed asphalt pavement may be used for all courses.

The RAP shall be of a consistent gradation and asphalt content. The Contractor may obtain the RAP from the job site or existing source.

All new aggregates used in the recycled mix shall meet the requirements of paragraph 401-2.1. New bituminous material shall meet the requirements of paragraph 401-2.3. Recycling agents shall meet the requirements of ASTM D 4552.

The recycled asphalt concrete mix shall be designed using procedures contained in the Asphalt Institute's Manual Series Number 20 (MS-20), Asphalt Hot-Mix Recycling, in conjunction with MS-2 (MS-2). The job mix shall meet the requirements of paragraph 401-3.2. In addition to the requirements of paragraph 401-3.2, the job mix formula shall indicate the percent of reclaimed asphalt pavement, the percent and viscosity grade of new asphalt, the percent and grade of hot-mix recycling agent (if used), and the properties (including viscosity and penetration) of the asphalt blend.

The Contractor shall submit documentation to the Engineer, indicating that the mixing equipment proposed for use is adequate to mix the percent of RAP shown in the job mix formula and meet all local and national environmental regulations.

401-3.4 TEST SECTION. Prior to full production, the Contractor shall prepare and place a quantity of bituminous mixture according to the job mix formula. The amount of mixture should be sufficient to construct a test section 60 long and 20 wide, placed in two lanes, with a longitudinal cold joint, and shall be of the same depth specified for the construction of the course which it represents. The underlying grade or pavement structure upon which the test section is to be constructed shall be the same as the remainder of the course represented by the test section. The equipment used in construction of the test section shall be the same type and weight to be used on the remainder of the course represented by the test section.

Three random samples shall be taken at the plant and tested for stability, flow, and air voids in accordance with paragraph 401-5.1a(2). Three randomly selected cores shall be taken from the finished pavement mat, and three from the longitudinal joint, and tested in accordance with paragraph 401-5.1b(4). Random sampling shall be in accordance with procedures contained in ASTM D 3665.

Stability, flow, and air voids shall be evaluated in accordance with paragraph 401-5.2b. Mat density shall be evaluated in accordance with paragraph 401-5.2c. Joint density shall be evaluated in accordance with paragraph 401-5.2d. The test section shall be considered acceptable if the percentage of material within limits (PWL) is 90 or more.

Two random samples of mixture shall be taken at the plant and tested for aggregate gradation and asphalt content in accordance with paragraphs 401-6.3a and 3b and evaluated in accordance with paragraphs 401-6.5a and 5b. The test section shall be considered acceptable if the gradation and asphalt content are within the limits specified in paragraphs 401-6.5a and 5b.

Voids in the mineral aggregate (VMA), for each plant sample, shall be computed in accordance with procedures contained in Chapter III, MARSHALL METHOD OF MIX DESIGN, of the Asphalt Institute's Manual Series No. 2 (MS-2), Mix Design for Asphalt Concrete.

Voids filled with asphalt, for each plant sample, shall be computed as follows:

a. Determine asphalt content in percentage by volume using:

$$I = \frac{P_b \times G_{mb}}{G_b}$$

Where:

I = Percentage by volume of asphalt

P_b = Percentage by weight of asphalt

G_{mb} = Bulk specific gravity of compacted mixture

Gb = Specific gravity of asphalt

b. Determine percent voids filled with asphalt as follows:

$$VF = \frac{I}{I + P_a} \times 100$$

Where:

VF = Percent voids filled with asphalt

I = Percentage by volume of asphalt

P_a = Percent air voids

The test section shall be considered acceptable if the voids in the mineral aggregate and the voids filled with asphalt are within the limits of Table 1.

If the test section should prove to be unsatisfactory, the necessary adjustments to the job mix formula, plant operation, placing procedures, and/or rolling procedures shall be made. A second test section shall then be placed. If the second test section also does not meet specification requirements, both sections shall be removed at the Contractor's expense. Additional test sections, as required, shall be constructed and evaluated for conformance to the specifications. Any additional sections that do not conform to specification requirements shall be removed at the Contractor's expense. Full production shall not begin until a satisfactory section has been constructed and accepted by the Engineer. The initial test section and any subsequent section that meets specification requirements shall be paid for in accordance with paragraph 401-8.1.

Job mix control testing shall be performed by the Contractor at the start of plant production and in conjunction with the calibration of the plant for the job mix formula. It should be recognized that the aggregates produced by the plant may not satisfy the gradation requirements or produce a mix that exactly meets the JMF. In those instances, it will be necessary to reevaluate and redesign the mix using plant-produced aggregates. Specimens should be prepared and the optimum bitumen content determined in the same manner as for the original design tests.

401-3.5 TESTING LABORATORY. The laboratory used to develop the job mix formula shall meet the requirements of ASTM D 3666. A certification signed by the manager of the laboratory stating that it meets these requirements shall be submitted to the Engineer prior to the start of construction. The certification shall contain as a minimum:

a. Qualifications of personnel; laboratory manager, supervising technician, and testing technicians.

b. A listing of equipment to be used in developing the job mix.

c. A copy of the laboratory's quality control system.

d. Evidence of participation in the AASHTO Materials Reference Laboratory (AMRL) program.

CONSTRUCTION METHODS

401-4.1 WEATHER LIMITATIONS. The bituminous mixture shall not be placed upon a wet surface or when the surface temperature of the underlying course is less than specified in Table 4. The temperature requirements may be waived by the Engineer, if requested; however, all other requirements including compaction shall be met.

TABLE 4. BASE TEMPERATURE LIMITATIONS

Mat Thickness	Base Temperature (Minimum) Deg. F	Deg. C
3 in. (7.5 cm) or greater	40	4
Greater than 1 in. (2.5 cm) but less than 3 in. (7.5 cm)	45	7
1 in. (2.5 cm) or less	50	10

401-4.2 BITUMINOUS MIXING PLANT. Plants used for the preparation of bituminous mixtures shall conform to the requirements of ASTM D 995 with the following changes:

a. Requirements for All Plants.

(1) Truck Scales. The bituminous mixture shall be weighed on approved scales furnished by the Contractor, or on certified public scales at the Contractor's expense. Scales shall be inspected and sealed as often as the Engineer deems necessary to assure their accuracy. Scales shall conform to the requirements of the General Provisions, Section 90-01.

(2) Testing Facilities. The Contractor shall provide laboratory facilities at the plant for the use of the Engineer's acceptance testing and the Contractor's quality control testing, in accordance with paragraph 401-6.2d. .

(3) Inspection of Plant. The Engineer, or Engineer's authorized representative, shall have access, at all times, to all areas of the plant for checking adequacy of equipment; inspecting operation of the plant: verifying weights, proportions, and material properties; and checking the temperatures maintained in the preparation of the mixtures.

(4) Storage Bins and Surge Bins. Paragraph 3.9 of ASTM D 995 is deleted. Instead, the following applies. Use of surge and storage bins for temporary storage of hot bituminous mixtures will be permitted as follows:

(a) The bituminous mixture may be stored in surge bins for period of time not to exceed 3 hours.

(b) The bituminous mixture may be stored in insulated storage bins for a period of time not to exceed 24 hours.

The bins shall be such that mix drawn from them meets the same requirements as mix loaded directly into trucks.

If the Engineer determines that there is an excessive amount of heat loss, segregation, or oxidation of the mixture due to temporary storage, no overnight storage will be allowed.

401-4.3 HAULING EQUIPMENT. Trucks used for hauling bituminous mixtures shall have tight, clean, and smooth metal beds. To prevent the mixture from adhering to them, the truck beds shall be lightly coated with a minimum amount of paraffin oil, lime solution, or other approved material. Each truck shall have a suitable cover to protect the mixture from adverse weather. When necessary, to ensure that the mixture will be delivered to the site at the specified temperature, truck beds shall be insulated or heated and covers shall be securely fastened.

401-4.4 BITUMINOUS PAVERS. Bituminous pavers shall be self-propelled with an activated screed, heated as necessary, and shall be capable of spreading and finishing courses of bituminous plant mix material which will meet the specified thickness, smoothness, and grade. The paver shall have sufficient power to propel itself and the hauling equipment without adversely affecting the finished surface.

The paver shall have a receiving hopper of sufficient capacity to permit a uniform spreading operation. The hopper shall be equipped with a distribution system to place the mixture uniformly in front of the screed without segregation. The screed shall effectively produce a finished surface of the required evenness and texture without tearing, shoving, or gouging the mixture.

If an automatic grade control device is used, the paver shall be equipped with a control system capable of automatically maintaining the specified screed elevation. The control system shall be automatically actuated from either a reference line and/or through a system of mechanical sensors or sensor-directed mechanisms or devices which will maintain the paver screed at a predetermined transverse slope and at the proper elevation to obtain the required surface. The transverse slope controller shall be capable of maintaining the screed at the desired slope within plus or minus 0.1 percent.

The controls shall be capable of working in conjunction with any of the following attachments:

a. Ski-type device of not less than 30 feet (9.14 m) in length.

b. Taut stringline (wire) set to grade.

c. Short ski or shoe.

d. Laser control.

401-4.5 ROLLERS. Rollers of the vibratory, steel wheel, and pneumatic-tired type shall be used. They shall be in good condition, capable of operating at slow speeds to avoid displacement of the bituminous mixture. The number, type, and weight of rollers shall be sufficient to compact the mixture to the required density while it is still in a workable condition.

The use of equipment which causes excessive crushing of the aggregate will not be permitted.

401-4.6 PREPARATION OF BITUMINOUS MATERIAL. The bituminous material shall be heated in a manner that will avoid local overheating and provide a continuous supply of the

bituminous material to the mixer at a uniform temperature. The temperature of the bituminous material delivered to the mixer shall be sufficient to provide a suitable viscosity for adequate coating of the aggregate particles, but shall not exceed 325 degrees F (160 degrees C).

401-4.7 PREPARATION OF MINERAL AGGREGATE. The aggregate for the mixture shall be heated and dried prior to introduction into the mixer. The maximum temperature and rate of heating shall be such that no damage occurs to the aggregates. The temperature of the aggregate and mineral filler shall not exceed 350 degrees F (175 degrees C) when the asphalt is added. Particular care shall be taken that aggregates high in calcium or magnesium content are not damaged by overheating. The temperature shall not be lower than is required to obtain complete coating and uniform distribution on the aggregate particles and to provide a mixture of satisfactory workability.

401-4.8 PREPARATION OF BITUMINOUS MIXTURE. The aggregates and the bituminous material shall be weighed or metered and introduced into the mixer in the amount specified by the job mix formula.

The combined materials shall be mixed until the aggregate obtains a uniform coating of bitumen and is thoroughly distributed throughout the mixture. Wet mixing time shall be the shortest time that will produce a satisfactory mixture, but not less than 25 seconds for batch plants. The wet mixing time for all plants shall be established by the Contractor, based on the procedure for determining the percentage of coated particles described in ASTM D 2489, for each individual plant and for each type of aggregate used. The wet mixing time will be set to achieve 95 percent of coated particles. For continuous mix plants, the minimum mixing time shall be determined by dividing the weight of its contents at operating level by the weight of the mixture delivered per second by the mixer. The moisture content of all bituminous mix upon discharge shall not exceed 0.5 percent.

401-4.9 PREPARATION OF THE UNDERLYING SURFACE. Immediately before placing the bituminous mixture, the underlying course shall be cleaned of all dust and debris. A prime coat or tack coat shall be applied in accordance with Item P-602 or P-603, if required by the contract specifications.

401-4.10 TRANSPORTING, PLACING, AND FINISHING. The bituminous mixture shall be transported from the mixing plant to the site in vehicles conforming to the requirements of paragraph 401-4.3. Deliveries shall be scheduled so that placing and compacting of mixture is uniform with minimum stopping and starting of the paver. Adequate artificial lighting shall be provided night placements. Hauling over freshly placed material shall not be permitted until the material has been compacted, as specified, and allowed to cool to atmospheric temperature.

The mix shall be placed and compacted at a temperature suitable for obtaining density, surface smoothness, and other specified requirements but not less than 250 degrees F (107 degrees C).

Upon arrival, the mixture shall be placed to the full width by a bituminous paver. It shall be struck off in a uniform layer of such depth that, when the work is completed, it shall have the required thickness and conform to the grade and contour indicated. The speed of the paver shall

be regulated to eliminate pulling and tearing of the bituminous mat. Unless otherwise permitted, placement of the mixture shall begin along the centerline of a crowned section or on the high side of areas with a one-way slope. The mixture shall be placed in consecutive adjacent strips having a minimum width of [ ] feet except where edge lanes require less width to complete the area. The longitudinal joint in one course shall offset the longitudinal joint in the course immediately below by at least 1 foot (30 cm); however, the joint in the surface top course shall be at the centerline of the pavement. Transverse joints in one course shall be offset by at least 10 feet (3 m) from transverse joints in the previous course.

Transverse joints in adjacent lanes shall be offset a minimum of 10 feet (3 m).

On areas where irregularities or unavoidable obstacles make the use of mechanical spreading and finishing equipment impractical, the mixture may be spread and luted by hand tools.

401-4.11 COMPACTION OF MIXTURE. After placing, the mixture shall be thoroughly and uniformly compacted by rolling. The surface shall be compacted as soon as possible when the mixture has attained sufficient stability so that the rolling does not cause undue displacement, cracking or shoving. The sequence of rolling operations and the type of rollers used shall be at the discretion of the Contractor.

The speed of the roller shall, at all times, be sufficiently slow to avoid displacement of the hot mixture and be effective in compaction. Any displacement occurring as a result of reversing the direction of the roller, or from any other cause, shall be corrected at once.

Sufficient rollers shall be furnished to handle the output of the plant. Rolling shall continue until the surface is of uniform texture, true to grade and cross section, and the required field density is obtained.

To prevent adhesion of the mixture to the roller, the wheels shall be kept properly moistened (and scrapers used), but excessive water will not be permitted.

In areas not accessible to the roller, the mixture shall be thoroughly compacted with hand tampers.

Any mixture that becomes loose and broken, mixed with dirt, contains check-cracking, or in any way defective shall be removed and replaced with fresh hot mixture and immediately compacted to conform to the surrounding area. This work shall be done at the Contractor's expense. Skin patching shall not be allowed.

401-4.12 JOINTS. The formation of all joints shall be made in such a manner as to ensure a continuous bond between the courses and obtain the required density. All joints shall have the same texture as other sections of the course and meet the requirements for smoothness and grade. The roller shall not pass over the unprotected end of the freshly laid mixture except when necessary to form a transverse joint. When necessary to form a transverse joint, it shall be made by means of placing a bulkhead or by tapering the course. The tapered edge shall be cut back to its full depth and width on a straight line to expose a vertical face prior to placing the adjacent

lane. In both methods, all contact surfaces shall be given a tack coat of bituminous material before placing any fresh mixture against the joint.

Longitudinal joints which are irregular, damaged, uncompacted, or otherwise defective shall be cut back to expose a clean, sound surface for the full depth of the course. All contact surfaces shall be given a tack coat of bituminous material prior to placing any fresh mixture against the joint.

MATERIAL ACCEPTANCE

401-5.1 ACCEPTANCE SAMPLING AND TESTING. All acceptance sampling and testing necessary to determine conformance with the requirements specified in this section will be performed by the Engineer at no cost to the Contractor. Testing organizations performing these tests shall meet the requirements of ASTM D 3666. All equipment in Contractor furnished laboratories shall be calibrated by the testing organization prior to the start of operations.

a. Plant-Produced Material. Plant-produced material shall be tested for stability, flow, and air voids on a lot basis. Sampling shall be from material deposited into trucks at the plant or from trucks at the job site. A lot will consist of:

- one day's production not to exceed 2,000 tons (1 814 000 kg), or
- a half day's production where a day's production is expected to consist of between 2,000 and 4,000 tons (1 814 000 and 3 628 000 kg), or
- similar subdivisions for tonnages over 4,000 tons (3 628 000 kg).

Where more than one plant is simultaneously producing material for the job, the lot sizes shall apply separately for each plant.

(1) Sampling. Each lot will consist of four equal sublots. Sufficient material for preparation of test specimens will be sampled by the Engineer on a random basis, in accordance with the procedures contained in ASTM D 3665. One set of laboratory compacted specimens will be prepared for each sublot in accordance with ASTM D 1559, paragraph 4.5, at the number of blows required by paragraph 401-3.2, Table 1. Each set of laboratory compacted specimens will consist of three test portions prepared from the same sample increment.

The sample of bituminous mixture may be put in a covered metal tin and placed in an oven for not less than 30 minutes nor more than 60 minutes to stabilize to compaction temperature. The compaction temperature of the specimens should be as specified in the job mix formula.

(2) Testing. Sample specimens shall be tested for stability and flow in accordance with ASTM D 1559, paragraph 5. Air voids will be determined by the Engineer in accordance with ASTM D 3203.

Prior to testing, the bulk specific gravity of each test specimen shall be measured by the Engineer in accordance with ASTM D 2726 using the procedure for laboratory-prepared thoroughly dry specimens, or ASTM D 1188, whichever is applicable, for use in computing air voids and pavement density.

For air voids determination, the theoretical maximum specific gravity of the mixture shall be measured for each sublot in accordance with ASTM D 2041, Type C, D or E container. The value used in the air voids computation for each sublot shall be based on the maximum specific gravity measurement for the sublot.

The stability and flow for each sublot shall be computed by averaging the results of all test specimens representing that sublot.

(3) Acceptance. Acceptance of plant produced material for stability, flow, and air voids shall be determined by the Engineer in accordance with the requirements of paragraph 401-5.2b.

b. Field Placed Material. Material placed in the field shall be tested for mat and joint density on a lot basis.

(1) Mat Density. The lot size shall be the same as that indicated in paragraph 401-5.1a and shall be divided into four equal sublots. One core of finished, compacted materials shall be taken by the Contractor from each sublot. Core locations will be determined by the Engineer on a random basis in accordance with procedures contained in ASTM D 3665. Cores shall not be taken closer than one foot from a transverse or longitudinal joint.

(2) Joint Density. The lot size shall be the total length of longitudinal joints constructed by a lot of material as defined in paragraph 401-5.1a. The lot shall be divided into four equal sublots. One core of finished, compacted materials shall be taken by the Contractor from each sublot. Core locations will be determined by the Engineer on a random basis in accordance with procedures contained in ASTM D 3665.

(3) Sampling. Samples shall be neatly cut with a core drill or other approved equipment. The minimum diameter of the sample shall be three inches. Samples that are clearly defective, as a result of sampling, shall be discarded and another sample taken. The Contractor shall furnish all tools, labor, and materials for cutting samples and filling the cored pavement. Cored holes shall be filled in a manner acceptable to the Engineer and within one day after sampling.

(4) Testing. The bulk specific gravity of each cored sample will be measured by the Engineer in accordance with ASTM D 2726 or ASTM D 1188, whichever is applicable. The percent compaction (density) of each sample will be determined by dividing the bulk specific gravity of each sublot sample by the average bulk specific gravity of all laboratory prepared specimens for the lot, as determined in paragraph 401-5.1a(2).

(5) Acceptance. Acceptance of field placed material for mat density will be determined by the Engineer in accordance with the requirements of paragraph 401-5.2c. Acceptance for joint density will be determined in accordance with the requirements of paragraph 401-5.2d.

c. Partial Lots — Plant-Produced Material. When operational conditions cause a lot to be terminated before the specified number of tests have been made for the lot, or when the Contractor and Engineer agree in writing to allow overages or other minor tonnage placements to be considered as partial lots, the following procedure will be used to adjust the lot size and the number of tests for the lot.

The last batch produced where production is halted will be sampled, and its properties shall be considered as representative of the particular sublot from which it was taken. Where three sublots are produced, they shall constitute a lot. Where one or two sublots are produced, they shall be incorporated into the next lot, and the total number of sublots shall be used in the acceptance plan calculation, i.e., n = 5 or n = 6, for example.

d. Partial Lots — Field Placed Material. The lot size for field placed material shall correspond to that of the plant material, except that, in no cases, shall less than three (3) cored samples be obtained, i.e., n = 3.

401-5.2 ACCEPTANCE CRITERIA.

a. General. Acceptance will be based on the following characteristics of the bituminous mixture and completed pavement as well as the implementation of the Contractor Quality Control plan and test results:

(1) Stability
(2) Flow
(3) Air voids
(4) Mat density
(5) Joint density
(6) Thickness
(7) Smoothness
(8) Grade

Stability, flow, and air voids will be evaluated for acceptance in accordance with paragraph 401-5.2b. Mat density will be evaluated for acceptance in accordance with paragraph 401-5.2c. Joint density will be evaluated for acceptance in accordance with paragraph 401-5.2d.

Acceptance for mat density and air voids will be based on the criteria contained in paragraph 401-5.2f(1). Acceptance for stability and flow will be based on the criteria contained in paragraph 401-5.2f(2). Acceptance for joint density will be based on the criteria contained in paragraph 401-5.2f(3). Thickness will be evaluated by the Engineer for compliance in accordance with paragraph 401-5.2f(4). Acceptance for smoothness will be based on the criteria

contained in paragraph 401-5.2f(5). Acceptance for grade will be based on the criteria contained in paragraph 401-5.2f(6).

The Engineer may at any time, not withstanding previous plant acceptance, reject and require the Contractor to dispose of any batch of bituminous mixture which is rendered unfit for use due to contamination, segregation, incomplete coating of aggregate, or improper mix temperature. Such rejection may be based on only visual inspection or temperature measurements. In the event of such rejection, the Contractor may take a representative sample of the rejected material in the presence of the Engineer, and if it can be demonstrated in the laboratory, in the presence of the Engineer, that such material was erroneously rejected, payment will be made for the material at the contract unit price.

b. Stability, Flow, Air Voids. Evaluation for acceptance of each lot of plant-produced material for stability, flow, and air voids shall be based on PWL. The Contractor shall target production quality to achieve 90 PWL or higher.

c. Mat Density. Evaluation for acceptance of each lot of in-place pavement for mat density shall be based on PWL. The Contractor shall target production quality to achieve 90 PWL or higher.

d. Joint Density. Evaluation for acceptance of each lot of in-place pavement for joint density shall be based on PWL. The Contractor shall target production quality to achieve 90 PWL or higher.

e. Percentage of Material Within Specification Limits (PWL). The percentage of material within specification limits (PWL) shall be determined in accordance with procedures specified in Section 110 of the General Provisions. The specification tolerance limits (L) and (U) are contained in Table 5.

f. Acceptance Criteria.

(1) Mat Density and Air Voids. If the PWL of the lot equals or exceeds 90 percent, the lot shall be acceptable. Acceptance and payment for the lot shall be determined in accordance with paragraph 401-8.1.

(2) Stability and Flow. If the PWL of the lot equals or exceeds 90 percent, the lot shall be acceptable. If the PWL is less than 90 percent, the Contractor shall determine the reason and take corrective action. If the PWL is below 80 percent, the Contractor must stop production and make adjustments to the mix.

(3) Joint Density. If the PWL of the lot equals or exceeds 90 percent, the lot shall be acceptable. If the PWL is less than 90 percent, the Contractor shall evaluate the method of compacting joints. If the PWL is below 80 percent, the Contractor shall stop production until the reason for poor compaction has been determined.

(4) Thickness. Thickness shall be evaluated for compliance by the Engineer to the requirements shown on the plans. Measurements of thickness shall be made by the Engineer using the cores extracted for each sublot for density measurement.

(5) Smoothness. The finished surfaces of the pavement shall not vary more than ¼ inch for the surface course. Each lot shall be evaluated with a 12 foot (3.6 m) straightedge. The lot size shall be 2,000 square yards (1 650 square meters). Measurements will be made perpendicular and parallel to the centerline at distances not to exceed 50 feet (15.2 m). When more than 15 percent of all measurements within a lot exceed the specified tolerance, the Contractor shall remove the deficient area and replace with new material. Sufficient material shall be removed to allow at least one inch of asphalt concrete to be placed. Skin patching shall not be permitted. High point may be ground off.

(6) Grade. The finished surface of the pavement shall not vary from the gradeline elevations and cross sections shown on the plans by more than ½ inch (12.70 mm). The finished grade of each lot will be determined by running levels at intervals of 50 feet (15.2 m) or less longitudinally and transversely to determine the elevation of the completed pavement. The lot size shall be 2,000 square yards (1 650 square meters). When more than 15 percent of all the measurements within a lot are outside the specified tolerance, the Contractor shall remove the deficient area and replace with new material. Sufficient material shall be removed to allow at least one inch of asphalt concrete to be placed. Skin patching for correcting low areas shall not be permitted. High points may be ground off.

g. Outliers. All individual tests for mat density and air voids shall be checked for outliers (test criterion) in accordance with ASTM E 178, at a significance level of 5 percent. Outliers shall be discarded, and the PWL shall be determined using the remaining test values.

TABLE 5. MARSHALL ACCEPTANCE LIMITS FOR STABILITY, FLOW, AIR VOIDS, DENSITY

TEST PROPERTY	Pavements Designed for Aircraft Gross Weights of 60,000 Lbs. or more or Tire Pressure Greater than 100 Psi	
Number of Blows	75	
	Specification Tolerance	
	L	U
Stability, minimum, pounds	1800	-
Flow, 0.01-inch	8	16
Air Voids Total Mix, percent	2.0	5.0
Density, percent	96.3	-

Joint density, percent	93.3	-

TABLE 6. TABLE FOR ESTIMATING PERCENT OF LOT WITHIN LIMITS (PWL)

Percent Within Limits (PWL), P_L, and P_U	Positive Values of Q					
n=3	n=4	n=5	n=6	n=7	n=8	
99	1.1541	1.4700	1.6714	1.8008	1.8888	1.9520
98	1.1524	1.4400	1.6016	1.6982	1.7612	1.8053
97	1.1496	1.4100	1.5427	1.6181	1.6661	1.6993
96	1.1456	1.3800	1.4897	1.5497	1.5871	1.6127
95	1.1405	1.3500	1.4407	1.4887	1.5181	1.5381
94	1.1342	1.3200	1.3946	1.4329	1.4561	1.4716
93	1.1269	1.2900	1.3508	1.3810	1.3991	1.4112
92	1.1184	1.2600	1.3088	1.3323	1.3461	1.3554
91	1.1089	1.2300	1.2683	1.2860	1.2964	1.3032
90	1.0982	1.2000	1.2290	1.2419	1.2492	1.2541
89	1.0864	1.1700	1.1909	1.1995	1.2043	1.2075
88	1.0736	1.1400	1.1537	1.1587	1.1613	1.1630
87	1.0597	1.1100	1.1173	1.1191	1.1199	1.1204
86	1.0448	1.0800	1.0817	1.0808	1.0800	1.0794
85	1.0288	1.0500	1.0467	1.0435	1.0413	1.0399
84	1.0119	1.0200	1.0124	1.0071	1.0037	1.0015
83	0.9939	0.9900	0.9785	0.9715	0.9672	0.9643
82	0.9749	0.9600	0.9452	0.9367	0.9325	0.9281
81	0.9550	0.9300	0.9123	0.9025	0.8966	0.8928
80	0.9342	0.9000	0.8799	0.8690	0.8625	0.8583
79	0.9124	0.8700	0.8478	0.8360	0.8291	0.8245
78	0.8897	0.8400	0.8160	0.8036	0.7962	0.7915
77	0.8662	0.8100	0.7846	0.7716	0.7640	0.7590
76	0.8417	0.7800	0.7535	0.7401	0.7322	0.7271
75	0.8165	0.7500	0.7226	0.7089	0.7009	0.6958
74	0.7904	0.7200	0.6921	0.6781	0.6701	0.6649
73	0.7636	0.6900	0.6617	0.6477	0.6396	0.6344
72	0.7630	0.6600	0.6316	0.6176	0.6095	0.6044
71	0.7077	0.6300	0.6016	0.5878	0.5798	0.5747
70	0.6787	0.6000	0.5719	0.5583	0.5504	0.5454
69	0.6490	0.5700	0.5423	0.5290	0.5213	0.5164
68	0.6187	0.5400	0.5129	0.4999	0.4924	0.4877

67	0.5878	0.5100	0.4836	0.4710	0.4638	0.4592
66	0.5563	0.4800	0.4545	0.4424	0.4354	0.4310
65	0.5242	0.4500	0.4255	0.4139	0.4073	0.4031
64	0.4916	0.4200	0.3967	0.3856	0.3793	0.3753
63	0.4586	0.3900	0.3679	0.3575	0.3515	0.3477
62	0.4251	0.3600	0.3392	0.3295	0.3239	0.3203
61	0.3911	0.3300	0.3107	0.3016	0.2964	0.2931
60	0.3568	0.3000	0.2822	0.2738	0.2691	0.2660
59	0.3222	0.2700	0.2537	0.2461	0.2418	0.2391
58	0.2872	0.2400	0.2254	0.2186	0.2147	0.2122
57	0.2519	0.2100	0.1971	0.1911	0.1877	0.1855
56	0.2164	0.1800	0.1688	0.1636	0.1613	0.1592
55	0.1806	0.1500	0.1408	0.1363	0.1338	0.1322
54	0.1447	0.1200	0.1125	0.1090	0.1070	0.1057
53	0.1087	0.0900	0.0843	0.0817	0.0802	0.0792
52	0.0725	0.0600	0.0562	0.0544	0.0534	0.0528
51	0.0363	0.0300	0.0281	0.0272	0.0267	0.0264
50	0.0	0.0	0.0	0.0	0.0	0.0

A lot is the quantity of material to be controlled and may represent a specified tonnage or a specified number of truckloads. The lot size, to be determined by the Engineer, should, for the most part, depend on the operational capacity of the plant, but shall in no case exceed 2,000 tons (1 814 000 kg) in accordance with paragraph 401-5q.1.

401-5.3 RESAMPLING PAVEMENT.

a. General. Resampling of a lot of pavement for mat density will be allowed if the Contractor requests, in writing, within 48 hours after receiving the written test results from the Engineer. A retest will consist of all the sampling and testing procedures contained in paragraphs 401-5.1b and 401-5.2c. Only one resampling per lot will be permitted.

(1) A redefined PWL shall be calculated for the resampled lot. The number of tests used to calculate the redefined PWL shall include the initial tests made for that lot plus the retests.

(2) The cost for resampling and retesting shall be borne by the Contractor.

b. Payment for Resampled Lots. The redefined PWL for a resampled lot shall be used to calculate the payment for that lot in accordance with Table 7.

c. Outliers. If the test within a lot include a very large or a very small value which appears to be outside the normal limits of variation, check for an outlier in accordance with ASTM E 178, at a significance level of 5 percent, to determine if this value should be discarded when computing the PWL.

401-5.4 LEVELING COURSE. Any course used for truing and leveling shall meet the requirements of paragraph 401-3.2 and 5.2b, but shall not be subject to the density requirements of paragraph 401-5.2c and 5.2d. The leveling course shall be compacted with the same effort used to achieve density of the test section. The truing and leveling course shall not exceed a nominal thickness of 1-½ inches (37.5 mm).

CONTRACTOR QUALITY CONTROL

401-6.1 GENERAL. The Contractor shall establish, provide, and maintain a Quality Control System which will provide reasonable assurance that all materials and completed construction submitted for acceptance conform to contract requirements whether manufactured or processed by the Contractor or procured from sub-contractors or vendors. Although guidelines are established and certain requirements are specified, they are minimum and the Contractor shall assume full responsibility for meeting all requirements.

The Contractor shall be prepared to discuss and present, at the preconstruction conference, his/her understanding of the quality control responsibilities for specific items as included in these specifications.

The Contractor shall provide the Engineer a certification stating that all of the testing equipment to be used is properly calibrated and will meet the specifications applicable for the specified test procedures. As a part of the process for approving the Contractor's plan, the Engineer may require the Contractor's technician to perform testing of samples to demonstrate an acceptable level of performance.

The Contractor shall perform quality control sampling, testing, and inspection during all phases of the work and shall perform them at a rate sufficient to ensure that the work conforms to the contract requirements, and at minimum test frequencies required by paragraph 401.6.3.

401-6.2 QUALITY CONTROL PLAN. The Contractor shall provide and maintain a Quality Control Plan (Plan) along with all the personnel, equipment, supplies and facilities necessary to obtain samples, perform and document test, and otherwise ensure the quality of the product.

The Contractor shall describe the Plan in a written document which shall be approved by the Engineer prior to the start of any production or construction. The written Plan shall be submitted to the Engineer for approval at least 10 days prior to the start of the operations.

No partial payment will be made for materials which are subject to specific quality control requirements without an approved Plan.

The Plan may be operated wholly or in part by the Contractor or an independent organization; however, the Plan's administration, including compliance with the Plan and its modification, shall remain the responsibility of the Contractor.

a. Plan Contents. The Plan shall be organized to address the following minimum items:

1. Quality control organization chart.

2. Area of responsibility and authority of each individual.

3. Names and qualifications of personnel as required by paragraphs 401-6.2c(1) and (2).

4. A listing of any outside organizations such as testing laboratories that will be employed by the contractor and a description of the services they will provide.

5. A testing plan which list the test required to be performed by the Contractor, the frequency of testing, sampling locations, and the location of the testing facilities.

6. Procedures for ensuing that test are taken in accordance with the testing plan, that they are documented, and that proper corrective actions are taken when necessary.

7. Procedures for ensuring that testing equipment is available, complies with specified standards and has been calibrated against certified standards.

8. Procedures for verifying that tests are taken in accordance with the appropriate ASTM standards.

9. Procedures for submittal of test results to the Engineer on a daily basis.

b. Plan Elements. The Plan shall address all elements which affect the quality of the asphalt concrete including:

1. Mix Design

2. Aggregate Grading

3. Quality of Materials

4. Stockpile Management

5. Proportioning

6. Mixing

7. Placing and Finishing

8. Joints

9. Compaction

10. Surface smoothness

c. Quality Control Organization. The Plan shall be implemented by the establishment of a separate Quality Control Organization. An organization chart shall be developed to show all quality control personnel and how these personnel integrate with other management, production, and construction functions and personnel.

The organizational chart shall identify all quality control staff by name and function, and shall indicate the total staff required to implement all elements of the quality control program, including inspection and testing functions for different items of work.

If an outside organization or independent testing laboratory is used for implementation of all or part of the Plan, the personnel assigned shall be subject to the qualification requirements of this paragraph. The organization chart shall indicate which personnel are contractor employees and which are provided by an outside organization.

The Quality Control Organization shall consist of the following minimum personnel:

1. Plan Administrator. The Plan Administrator shall be an employee of the Contractor, or a consultant engaged by the Contractor. The Plan Administrator shall have prior quality control experience on a project of comparable size and scope.

In addition, the Plan Administrator shall meet one of the following requirements:

a. Professional Engineer with one year of airport paving experience acceptable to the Engineer.

b. Engineer-in-Training with two years of airport paving experience acceptable to the Engineer.

c. An individual with three years of highway and/or airport paving experience acceptable to the Engineer and with a Bachelor of Science Degree in Civil Engineering, Civil Engineering Technology or Construction.

d. Construction Materials Technician certified at Level III by the National Institute for Certification in Engineering Technologies (NICET).

e. Highway Materials Technician certified at Level III by NICET.

f. Highway Construction Technician certified at Level III by NICET.

g. A NICET certified Engineering Technician in Civil Engineering Technology with 5 years of highway and/or airport paving experience acceptable to the Engineer.

Certification at an equivalent level, by a State or nationally recognized organization will be acceptable in lieu of NICET certification.

The Plan Administrator shall have full authority to institute any and all actions necessary for the successful operation of the Plan to ensure compliance with the specifications. The Plan Administrator shall report directly to a responsible officer in the Contractor's organization. The Administrator may supervise the Plan on more than one project provided that they can be at the job site within one hour after being notified of a problem.

2. Quality Control Technicians. The Contractor shall provide a sufficient number of Quality Control Technicians to adequately implement the Plan. These personnel shall be either engineers, engineering technicians, or experienced craftsmen with qualifications equivalent to NICET Level II or higher in their appropriate field and shall have a minimum of 2 years experience in their area of expertise.

The Quality Control Technicians shall report directly to the Plan Administrator and shall perform the following functions:

a. Inspection of all plant equipment used in proportioning and mixing to ensure proper calibration and operating condition.

b. Performance of quality control tests necessary to adjust and control mix proportioning in accordance with the job mix formula.

c. Inspection of all equipment used in placing, finishing, and compacting material to ensure proper operation condition.

d. Inspection during construction to ensure placing, joint construction, and compaction is in conformance with the specifications and will produce a finished product that meets specification requirements.

e. Performance of all quality control testing as required by paragraph 401-6.3, including density monitoring.

The Plan shall detail the criteria to be utilized to correct unsatisfactory production processes and construction practices.

Certification at an equivalent level, by a State or nationally recognized organization will be acceptable in lieu of NICET certification.

d. Testing Laboratory. The Plan must provide for a fully equipped asphalt laboratory located at the plant or job site. It shall be available for joint use by the Contractor for quality

control testing and by the Engineer for acceptance testing and must have adequate equipment for the performance of the tests required by these specifications. The Engineer shall have priority in use of the equipment necessary for acceptance testing.

The effective working area of the laboratory shall be a minimum of 150 square feet (14 square meters) with a ceiling height of not less than 7.5 feet (2.3 meters). Lighting shall be adequate to illuminate all working areas. It shall be equipped with heating and air conditioning units to maintain a temperature of 70 degrees F + 5 degrees (21 degrees C + 2.3 degrees C).

Laboratory facilities shall be kept clean and all equipment shall be maintained in proper working condition. The Engineer shall be permitted unrestricted access to inspect the Contractor's laboratory facility and witness quality control activities. The Engineer will advise the Contractor in writing of any noted deficiencies concerning the laboratory facility, equipment, supplies, or testing personnel and procedures. When the deficiencies are serious enough to be adversely affecting test results, the incorporation of the materials into the work shall be suspended immediately and will not be permitted to resume until the deficiencies are satisfactorily corrected.

e. Sampling. The plan shall contain a statistically based procedure of random sampling which provides that all materials being produced have an equal chance of being selected for sampling and testing. The Engineer shall be provided the opportunity to witness all sampling.

f. Noncompliance. In cases where quality control activities do no comply with either the Contractor's Quality Control Program or the contract provisions, or where the Contractor fails to properly operate and maintain an effective Quality Control Program, the Engineer may:

1. Order the Contractor to replace ineffective or unqualified quality control personnel.

2. Carry out the functions and operations of the Contractor's approved Quality Control Program. Cost incurred by the Owner to operate the Quality Control Program or to otherwise remedy the Contractor's non-compliance with quality related provisions of the Contract shall be deducted from the total amount due the Contractor.

401-6.3 QUALITY CONTROL TESTING. The Contractor shall perform all quality control tests necessary to control the production and construction processes applicable to these specifications and as set forth in the approved Quality Control Plan. The testing program shall include, but not necessarily limited to, tested for the control of asphalt content, aggregate gradation, temperatures, aggregate moisture, field compaction, and surface smoothness. The Contractor shall employ random sampling procedures for obtaining test samples.

a. Asphalt Content. A minimum of two extraction tests shall be performed per lot in accordance with ASTM D 2172 for determination of asphalt content. The weight of ash portion of the extraction test, as described in ASTM D 2172, shall be determined as part of the first extraction test performed at the beginning of plant production; and as part of every tenth extraction test performed thereafter, for the duration of plan production. The last weight of ash value obtained shall be used in the calculation of the asphalt content for the mixture.

The use of the nuclear method for determining asphalt content in accordance with ASTM D 4125 is permitted, provided that it is calibrated for the specific mix being used.

b. Gradation. Aggregate gradations shall be determined a minimum of twice per lot from mechanical analysis of extracted aggregate in accordance with AASHTO T 30 and ASTM C 136 (Dry Sieve). When asphalt content is determined by the nuclear method, aggregate gradation shall be determined from hot bin samples on batch plants, or from the cold feed on drum mix or continuous mix plants, and tested in accordance with ASTM C 136 (dry sieve) using actual batch weights to determine the combined aggregate gradation of the mixture.

c. Moisture Content of Aggregate. The moisture content of aggregate used for production shall be determined a minimum of once per lot in accordance with ASTM C 566.

d. Moisture Content of Mixture. The moisture content of the mixture shall be determined once per lot in accordance with ASTM D 1461.

e. Temperatures. Temperatures shall be checked, at least four times per lot, at necessary locations to determine the temperatures of the dryer, the bitumen in the storage tank, the mixture at the plant, and the mixture at the job site.

f. In-Place Density Monitoring. The Contractor shall conduct any necessary testing to ensure that the specified density is being achieved. A nuclear gauge may be used to monitor the pavement density in accordance with ASTM D 2950.

g. Additional Testing. Any additional testing that the Contractor deems necessary to control the process may be performed at the Contractor's option.

h. Monitoring. The Engineer reserves the right to monitor any or all of the above testing.

401-6.4 SAMPLING. When directed by the Engineer, the Contractor shall sample and test any material which appears inconsistent with similar material being sampled, unless such material is voluntarily removed and replaced or deficiencies corrected by the Contractor. All sampling shall be in accordance with standard procedures specified.

401-6.5 CONTROL CHARTS. The Contractor shall maintain linear control charts both for individual measurements and range (i.e., difference between highest and lowest measurements) for aggregate gradation and asphalt content.

Control charts shall be posted in a location satisfactory to the Engineer and shall be kept current. As a minimum, the control charts shall identify the project number, the contract item number, the test number, each test parameter, the Action and Suspension Limits applicable to each test parameter, and the Contractor's test results. The Contractor shall use the control charts as part of a process control system for identifying potential problems and assignable causes before they occur. If the Contractor's projected data during production indicates a problem and the

Contractor is not taking satisfactory corrective action, the Engineer may suspend production or acceptance of the material.

a. Individual Measurements. Control charts for individual measurements shall be established to maintain process control within tolerance for aggregate gradation and asphalt content. The control charts shall use the job mix formula target values as indicators of central tendency for the following test parameters with associated Action and Suspension Limits:

CONTROL CHART LIMITS FOR INDIVIDUAL MEASUREMENTS		
Sieve	Action Limit	Suspension Limit
¾ inch (19.0 mm)	0%	0%
½ inch (12.5 mm)	+/-6%	+/-9%
⅜ inch (9.5 mm)	+/-6%	+/-9%
No. 4 (4.75 mm)	+/-6%	+/-9%
No. 16 (1.18 mm)	+/-5%	+/-7.5%
No. 50 (0.30 mm)	+/-3%	+/-4.5%
No. 200 (0.075 mm)	+/-2%	+/-3%
Asphalt Content	+/-0.45%	+/-0.70%

b. Range. Control charts for range shall be established to control process variability for the test parameters and Suspension Limits listed below. The range shall be computed for each lot as the difference between the two test results for each control parameter. The Suspension Limits specified below are based on a sample size of n = 2. Should the Contractor elect to perform more than two tests per lot, the Suspension Limits shall be adjusted by multiplying the Suspension Limit by 1.18 for n = 3 and by 1.27 for n = 4.

CONTROL CHART LIMITS BASED ON RANGE (Based on n = 2)	
Sieve	Suspension Limit
½ inch (12.5 mm)	11 percent
⅜ inch (9.5 mm)	11 percent
No. 4 (4.75 mm)	11 percent
No. 16 (1.18 mm)	9 percent
No. 50 (0.30 mm)	6 percent
No. 200 (0.075 mm)	3.5 percent
Asphalt Content	0.8 percent

c. Corrective Action. The Quality Control Plan shall indicate that appropriate action shall be taken when the process is believed to be out of control. The Plan shall contain sets of rules to gauge when a process is out of control and detail what action will be taken to bring the process into control. As a minimum, a process shall be deemed out of control and production stopped and corrective action taken, if:

(1) One point falls outside the Suspension Limit line for individual measurements or range; or

(2) Two points in a row fall outside the Action Limit line for individual measurements.

401-6.6 QUALITY CONTROL REPORTS. The Contractor shall maintain records and shall submit reports of quality control activities daily, in accordance with the Contractor Quality Control Plan.

METHOD OF MEASUREMENT

401 7.1 MEASUREMENT. Plant mix bituminous concrete pavement shall be measured by the number of tons of bituminous mixture used in the accepted work. Recorded batch weights or truck scale weights will be used to determine the basis for the tonnage.

BASIS OF PAYMENT

401-8.1 PAYMENT. Payment for an accepted lot of bituminous concrete pavement shall be made at the contract unit price per ton for bituminous mixture adjusted according to paragraph 401-8.1a, subject to the limitation that:

The price shall be compensation for furnishing all materials, for all preparation, mixing, and placing of these materials, and for all labor, equipment, tools, and incidentals necessary to complete the item.

a. Basis of Adjusted Payment. The pay factor for each individual lot shall be calculated in accordance with Table 6. A pay factor shall be calculated for both mat density and air voids. The lot pay factor shall be the higher of the two values when calculations for both mat density and air voids are 100 percent or higher. The lot pay factor shall be the product of the two values when only one of the calculations for either mat density or air voids is 100 percent or higher. The lot pay factor shall be the lower of the two values when calculations for both mat density and air voids are less than 100 percent.

TABLE 6. PRICE ADJUSTMENT SCHEDULE [1]

Percentage of Material Within Specification Limits (PWL)	Lot Pay Factor (Percent of Contract Unit Price)
96 – 100	106
90 – 95	PWL + 10
75 – 89	0.5 PWL + 55
55 – 74	1.4PWL – 12
Below 55	Reject [2]

[1] ALTHOUGH IT IS THEORETICALLY POSSIBLE TO ACHIEVE A PAY FACTOR OF 106 PERCENT FOR EACH LOT, ACTUAL PAYMENT ABOVE 100 PERCENT SHALL BE SUBJECT TO THE TOTAL PROJECT PAYMENT LIMITATION SPECIFIED IN PARAGRAPH 401-8.1.

[2] The lot shall be removed and replaced. However, the Engineer may decide to allow the rejected lot to remain. In that case, if the Engineer and Contractor agree in writing that the lot shall not be removed, it shall be paid for at 50 percent of the contract unit price and the total project payment shall be reduced by the amount withheld for the rejected lot.

For each lot accepted, the adjusted contract unit price shall be the product of the lot pay factor for the lot and the contract unit price. Payment shall be subject to the total project payment limitation specified in paragraph 401-8.1. Payment in excess of 100 percent for accepted lots of bituminous concrete pavement shall be used to offset payment for accepted lots of bituminous concrete pavement that achieve a lot pay factor less than 100 percent.

TABLE 6. PRICE ADJUSTMENT SCHEDULE [1]

Percentage of Material Within Specification Limits (PWL)	Lot Pay Factor (Percent of Contract Unit Price)
93 – 100	103
90 – 93	PWL + 10
70 – 89	0.125PWL + 88.75
40 – 69	0.75PWL +45
Below 40	Reject [2]

[1] ALTHOUGH IT IS THEORETICALLY POSSIBLE TO ACHIEVE A PAY FACTOR OF 103 PERCENT FOR EACH LOT, ACTUAL PAYMENT ABOVE 100 PERCENT SHALL BE SUBJECT TO THE TOTAL PROJECT PAYMENT LIMITATION SPECIFIED IN PARAGRAPH 401-8.1.

[2] The lot shall be removed and replaced. However, the Engineer may decide to allow the rejected lot to remain. In that case, if the Engineer and Contractor agree in writing that the lot shall not be removed, it shall be paid for at 50 percent of the contract unit price AND THE TOTAL PROJECT PAYMENT LIMITATION SHALL BE REDUCED BY THE AMOUNT WITHHELD FOR THE REJECTED LOT.

b. Payment. Payment will be made under:

Item P-401-8.1a Bituminous Surface Course—per ton

TESTING REQUIREMENTS

ASTM C 29	Unit Weight of Aggregate
ASTM C 88	Soundness of Aggregates by Use of Sodium Sulfate or Magnesium Sulfate
ASTM C 117	Test Method for Materials Finer than 75μm (No.200) Sieve in Mineral Aggregates by Washing
ASTM C 131	Resistance to Abrasion of Small Size Coarse Aggregate by Use of the Los Angeles Machine
ASTM C 136	Sieve or Screen Analysis of Fine and Coarse Aggregates
ASTM C 183	Sampling of Hydraulic Cement
ASTM C 566	Total Moisture Content of Aggregate by Drying
ASTM D 75	Sampling Aggregates
ASTM D 995	Requirements for Mixing Plants for Hot-Mixed Hot-Laid Bituminous Paving Mixtures
ASTM D 1188	Bulk Specific Gravity of Compacted Bituminous Mixtures Using Paraffin-Coated Specimens
ASTM D 1461	Moisture or Volatile Distillates in Bituminous Paving Mixtures
ASTM D 1559	Resistance to Plastic Flow of Bituminous Mixtures Using Marshall Apparatus
ASTM D 2041	Theoretical Maximum Specific Gravity and Density of Bituminous Paving Mixtures
ASTM D 2172	Quantitative Extraction of Bitumen from Bituminous Paving Mixtures
ASTM D 2419	Sand Equivalent Value of Soils and Fine Aggregate
ASTM D 2489	Degree of Particle Coating of Bituminous-Aggregate Mixtures
ASTM D 2726	Bulk Specific Gravity of Compacted Bituminous Mixtures Using Saturated Surface-Dry Specimens
ASTM D 2950	Density of Bituminous Concrete in Place by Nuclear Methods

ASTM D 3203	Percent Air Voids in Compacted Dense and Open Bituminous Paving Mixtures
ASTM D 3665	Random Sampling of Paving Materials
ASTM D 3666	Inspection and Testing Agencies for Bituminous Paving Materials
ASTM D 4125	Asphalt Content of Bituminous Mixtures by the Nuclear Method
ASTM D 4318	Liquid Limit, Plastic Limit, and Plasticity Index of Soils
ASTM D 4791	Flat or Elongated Particles in Coarse Aggregate
ASTM D 4867	Effect of Moisture on Asphalt Concrete Paving Mixtures
ASTM E 178	Practice for Dealing with Outlying Observations
AASHTO T 30	Mechanical Analysis of Extracted Aggregate
The Asphalt Institute's Manual No. 2 (MS-2)	Mix Design Methods for Asphalt Concrete
The Asphalt Institute's Manual No. 2 (MS-2)	Hot-Mix Recycling

MATERIAL REQUIREMENTS

ASTM D 242	Mineral Filler for Bituminous Paving Mixtures
ASTM D 946	Asphalt Cement for Use in Pavement Construction
ASTM D 3381	Viscosity-Graded Asphalt Cement for Use in Pavement Construction
ASTM D 4552	Classifying Hot-Mix Recycling Agents

END ITEM P-401

ITEM P-403 PLANT MIX BITUMINOUS PAVEMENTS (LEVELING COURSE)

DESCRIPTION

403-1.1 This item shall consist of a leveling course composed of mineral aggregate and bituminous material mixed in a central mixing plant and placed on a prepared course in accordance with these specifications and shall conform to the lines, grades, thicknesses, and typical cross sections shown on the plans. Each course shall be constructed to the depth, typical section, and elevation required by the plans and shall be rolled, finished, and approved before the placement of the next course.

MATERIALS

403-2.1 AGGREGATE. Aggregates shall consist of crushed stone or crushed gravel with other inert finely divided mineral aggregate maximum size aggregate 5/8". The portion of combined materials retained on the No. 4 (4.75 mm) sieve is coarse aggregate. The portion of combined materials passing the No. 4 (4.75 mm) sieve and retained on the No. 200 (0.075 mm) sieve is fine aggregate, and the portion passing the No. 200 (0.075 mm) sieve is mineral filler.

a. Coarse Aggregate. Coarse aggregate shall consist of sound, tough, durable particles, free from adherent films of matter that would prevent thorough coating and bonding with the bituminous material and be free from organic matter and other deleterious substances. The percentage of wear shall not be greater than 40 percent when tested in accordance with ASTM C 131. The sodium sulfate soundness loss shall not exceed 10 percent, or the magnesium sulfate soundness loss shall not exceed 13 percent, after five cycles, when tested in accordance with ASTM C 88.

Aggregate shall contain at least 70 percent by weight of individual pieces having two or more fractured faces and 85 percent by weight having at least one fractured face. The area of each face shall be equal to at least 75 percent of the smallest midsectional area of the piece. When two fractured faces are contiguous, the angle between the planes of fractures shall be at least 30 degrees to count as two fractured faces. Fractured faces shall be obtained by crushing.

The aggregate shall not contain more than a total of 8 percent, by weight, of flat particles, elongated particles, and flat and elongated particles, when tested in accordance with ASTM D 4791 with a value of 5:1.

Slag shall be air-cooled, blast furnace slag, and shall have a compacted weight of not less than 70 pounds per cubic foot (1.12 mg/cubic meter) when tested in accordance with ASTM C 29.

b. Fine Aggregate. Fine aggregate shall consist of clean, sound, durable, angular shaped particles produced by crushing stone, or gravel that meets the requirements for wear and soundness specified for coarse aggregate. The aggregate particles shall be free from coatings of clay, silt, or other objectionable matter and shall contain no clay balls. The fine aggregate, including any blended material for the fine aggregate, shall have a plasticity index of not more than 6 and a liquid limit of not more than 25 when tested in accordance with ASTM D 4318.

Natural (non-manufactured) sand may be used to obtain the gradation of the aggregate blend or to improve the workability of the mix. The amount of sand to be added will be adjusted to produce mixtures conforming to requirements of this specification. [The fine aggregate shall not contain more than 15 percent natural sand by weight of total aggregates.] If used, the natural sand shall meet the requirements of ASTM D 1073 and shall have a plasticity index of not more than 6 and a liquid limit of not more than 25 when tested in accordance with ASTM D 4318.

The aggregate shall have sand equivalent values of 45 or greater when tested in accordance with ASTM D 2419.

c. Sampling. ASTM D 75 shall be used in sampling coarse and fine aggregate, and ASTM C 183 shall be used in sampling mineral filler.

403-2.2 MINERAL FILLER. If filler, in addition to that naturally present in the aggregate, is necessary, it shall meet the requirements of ASTM D 242.

403-2.3 BITUMINOUS MATERIAL. Bituminous material shall conform to the requirements of P-401.

The Contractor shall furnish vendor's certified test reports for each lot of bituminous material shipped to the project. The vendor's certified test report for the bituminous material can be used for acceptance or tested independently by the Engineer.

403-2.4 PRELIMINARY MATERIAL ACCEPTANCE. Prior to delivery of materials to the job site, the Contractor shall submit certified test reports to the Engineer for the following materials:

a. Coarse Aggregate.

(1) Percent of wear.

(2) Soundness.

(3) Unit weight of slag.

(4) Percent fractured faces

b. Fine Aggregate.

(1) Liquid limit.

(2) Plasticity index.

(3) Sand equivalent.

c. Mineral Filler.

d. Bituminous Material. Test results for bituminous material shall include temperature/viscosity charts for mixing and compaction temperatures.

The certifications shall show the appropriate ASTM tests for each material, the test results, and a statement that the material meets the specification requirement.

The Engineer may request samples for testing, prior to and during production, to verify the quality of the materials and to ensure conformance with the applicable specifications.

403-2.5 ANTI-STRIPPING AGENT. Any anti-stripping agent or additive if required shall be heat stable, shall not change the asphalt cement viscosity beyond specifications, shall contain no harmful ingredients, shall be added in recommended proportion by approved method, and shall be a material approved by the Department of Transportation of the State in which the project is located.

COMPOSITION

403-3.1 COMPOSITION OF MIXTURE. The bituminous plant mix shall be composed of a mixture of well-graded aggregate, filler and anti-strip agent if required, and bituminous material. The several aggregate fractions shall be sized, handled in separate size groups, and combined in such proportions that the resulting mixture meets the grading requirements of the job mix formula (JMF).

403-3.2 JOB MIX FORMULA. No bituminous mixture for payment shall be produced until a job mix formula has been approved in writing by the Engineer. The bituminous mixture shall be designed using procedures contained in Chapter 5, MARSHALL METHOD OF MIX DESIGN, of the Asphalt Institute's

Manual Series No. 2 (MS-2), Mix Design Methods for Asphalt Concrete, sixth edition, and shall meet the requirements of Tables 1, 2 and 3.

Tensile Strength Ratio (TSR) of the composite mixture, as determined by ASTM D 4867, shall not be less than 75. Anti-stripping agent shall be added to the asphalt, as necessary, to produce a TSR of not less than 75. If an anti-strip agent is required, it will be provided by the Contractor at no additional cost to the Owner.

The job mix formula shall be submitted in writing by the Contractor to the Engineer at least [ ] days prior to the start of paving operations and shall include as a minimum:

a. Percent passing each sieve size for total combined gradation, individual gradation of all aggregate stockpiles and percent by weight of each stockpile used in the job mix formula.

b. Percent of asphalt cement.

c. Asphalt performance, viscosity or penetration grade, and type of modifier if used.

d. Number of blows of hammer compaction per side of molded specimen.

e. Mixing temperature.

f. Compaction temperature.

g. Temperature of mix when discharged from the mixer.

h. Temperature-viscosity relationship of the asphalt cement.

i. Plot of the combined gradation on the Federal Highway Administration (FHWA) 45 power gradation curve.

j. Graphical plots of stability, flow, air voids, voids in the mineral aggregate, and unit weight versus asphalt content.

k. Percent natural sand.

l. Percent fractured faces.

m. Percent by weight of flat particles, elongated particles, and flat and elongated particles (and criteria).

n. Tensile Strength Ratio (TSR).

o. Anti-strip agent (if required).

The Contractor shall submit to the Engineer the results of verification testing of three (3) asphalt samples prepared at the optimum asphalt content. The average of the results of this testing shall indicate conformance with the job mix formula requirements specified in Tables 1, 2 and 3.

When the project requires asphalt mixtures of differing aggregate gradations, a separate job mix formula and the results of job mix formula verification testing must be submitted for each mix.

Table 1. Marshall Design Criteria

Test Property	-
Number of blows	75
Stability, pounds minimum	1800
Flow, 0.01 in.	8-16
Air voids (percent)	2-5
Percent voids in mineral aggregate, minimum	See Table 2.

Table 2. Minimum Percent Voids In Mineral Aggregate

Maximum Particle Size		Minimum Voids in Mineral Aggregate, percent
in	mm	Percent
½	12.5	16

The mineral aggregate shall be of such size that the percentage composition by weight, as determined by laboratory sieves, will conform to the gradation or gradations specified in Table 3 when tested in accordance with ASTM C 136 and C 117.

The gradations in Table 3 represent the limits that shall determine the suitability of aggregate for use from the sources of supply. The aggregate, as selected (and used in the JMF), shall have a gradation within the limits designated in Table 3 and shall not vary from the low limit on one sieve to the high limit on the adjacent sieve, or vice versa, but shall be well graded from coarse to fine.

Deviations from the final approved mix design for bitumen content and gradation of aggregates shall be within the action limits for individual measurements as specified in paragraph 403-6.5a. The limits still will apply if they fall outside the master grading band in Table 3.

The maximum size aggregate used shall not be more than one-half of the thickness of the course being constructed except where otherwise shown on the plans or ordered by the Engineer.

Table 3. Aggregate - Bituminous PavementsSieve Size	**Percentage by Weight Passing Sieve**
1 ½ in. (37.50 mm)	--
1 in. (25.0 mm)	--
¾ in. (19.0 mm)	100
½ in. (12.5 mm)	79-99
⅜ in. (9.5 mm)	68-88
No. 4 (4.75 mm)	48-68
No. 8 (2.36 mm)	33-53
No. 16 (1.18 mm)	20-40
No. 30 (0.60 mm)	14-30
No. 50 (0.30 mm)	9-21
No. 100 (0.15 mm)	6-16
No. 200 (0.075 mm)	3-6
Asphalt Percent:	
Stone or gravel	5.0-7.5

The aggregate gradations shown are based on aggregates of uniform specific gravity. The percentages passing the various sieves shall be corrected when aggregates of varying specific gravities are used, as indicated in the Asphalt Institute Manual Series No. 2 (MS-2), Chapter 3.

403-3.3 RECYCLED ASPHALT CONCRETE.

NOT USED

403-3.4 TEST SECTION. Prior to full production, the Contractor shall prepare and place a quantity of bituminous mixture according to the job mix formula. The amount of mixture shall be sufficient to construct a test section 200' ft. long and 15' ft. wide, placed in two lanes, with a longitudinal cold joint, and shall be of the same depth specified for the construction of the course which it represents. A cold joint is an exposed construction joint at least 4 hours old or whose mat has cooled to less than 160 °F. The underlying grade or pavement structure upon which the test section is to be constructed shall be the same as the remainder of the course represented by the test section. The equipment used in construction of the test section shall be the same type and weight to be used on the remainder of the course represented by the test section.

The test section shall be evaluated for acceptance as a single lot in accordance with the acceptance criteria in paragraph 403-5.1 and 403-6.3. The test section shall be divided into equal sublots. As a minimum the test section shall consist of 3 sublots.

The test section shall be considered acceptable if the average mat density of the test section cores is greater than or equal to 98 percent and the average joint density of the test section cores is greater than or equal to 95 percent. If the initial test section should prove to be unacceptable, the necessary adjustments to the job mix formula, plant operation, placing procedures, and/or rolling procedures shall be made. A second test section shall then be placed. If the second test section also does not meet specification requirements, both sections shall be removed at the Contractor's expense. Additional test sections, as required, shall be constructed and evaluated for conformance to the specifications. Any additional sections that are not acceptable shall be removed at the Contractor's expense. Full production shall not begin until an acceptable section has been constructed and accepted in writing by the Engineer. Once an acceptable test section has been placed, payment for the initial test section and the section that meets specification requirements shall be made in accordance with paragraph 403-8.1.

Job mix control testing shall be performed by the Contractor at the start of plant production and in conjunction with the calibration of the plant for the job mix formula. If the aggregates produced by the plant do not satisfy the gradation requirements or produce a mix that meets the JMF, it will be necessary to reevaluate and redesign the mix using plant-produced aggregates. Specimens shall be prepared and the optimum bitumen content determined in the same manner as for the original design tests.

403-3.5 JOB MIX (JMF) FORMULA LABORATORY. The Contractor's laboratory used to develop the job mix formula (JMF) shall meet the requirements of ASTM D 3666. The laboratory accreditation must be current and listed on the accrediting authority's website. All test methods required for developing the JMF must be listed on the lab accreditation. A copy of the laboratory's current accreditation and accredited test methods shall be submitted to the Engineer prior to start of construction.

CONSTRUCTION METHODS

403-4.1 WEATHER LIMITATIONS. The bituminous mixture shall not be placed upon a wet surface or when the surface temperature of the underlying course is less than specified in Table 4. The temperature requirements may be waived by the Engineer, if requested; however, all other requirements including compaction shall be met.

Table 4. Base Temperature Limitations

Mat Thickness	Base Temperature (Minimum)	
	Deg. F	Deg. C
3 in. (7.5 cm) or greater	40	4
Greater than 1 in. (2.5 cm) but less than 3 in. (7.5 cm)	45	7
1 in. (2.5 cm) or less	50	10

403-4.2 BITUMINOUS MIXING PLANT. Plants used for the preparation of bituminous mixtures shall conform to the requirements of ASTM D 995 with the following changes:

a. Requirements for all plants include:

(1) Truck Scales. The bituminous mixture shall be weighed on approved scales furnished by the Contractor, or on certified public scales at the Contractor's expense. Scales shall be inspected and sealed as often as the Engineer deems necessary to assure their accuracy. Scales shall conform to the requirements of the General Provisions, Section 90-01.

In lieu of scales, and as approved by the Engineer, asphalt mixture weights may be determined by the use of an electronic weighing system equipped with an automatic printer that weighs the total paving mixture. Contractor must furnish calibration certification of the weighing system prior to mix production and as often thereafter as requested by the Engineer.

(2) Testing Facilities. The Contractor shall provide laboratory facilities at the plant for the use of the Engineer's acceptance testing and the Contractor's quality control testing. The Engineer will always have priority in the use of the laboratory. The lab shall have sufficient space and equipment so that both testing representatives (Engineer's and Contractor's) can operate efficiently. The lab shall also meet the requirements of ASTM D 3666. The plant testing laboratory shall have a floor space area of not less than 150 sq ft, with a ceiling height of not less than 7-½ feet. The laboratory shall be weather tight, sufficiently heated in cold weather, air-conditioned in hot weather to maintain temperatures for testing purposes of 70 °F +/- 5 °F. The plant testing laboratory shall be located on the plant site to provide an unobstructed view, from one of its windows, of the trucks being loaded with the plant mix materials.

Laboratory facilities shall be kept clean, and all equipment shall be maintained in proper working condition. The Engineer shall be permitted unrestricted access to inspect the Contractor's laboratory facility and witness quality control activities. The Engineer will advise the Contractor in writing of any noted deficiencies concerning the laboratory facility, equipment, supplies, or testing personnel and procedures. When the deficiencies are serious enough to be adversely affecting the test results, the incorporation of the materials into the work shall be suspended immediately and will not be permitted to resume until the deficiencies are satisfactorily corrected.

As a minimum, the plant testing laboratory shall have:

a. Adequate artificial lighting

b. Electrical outlets sufficient in number and capacity for operating the required testing equipment and drying samples

c. Fire extinguishers (2), Underwriter's Laboratories approved

d. Work benches for testing, minimum 2-½ feet by 10 feet

e. Desk with 2 chairs

f. Sanitary facilities convenient to testing laboratory

g. Exhaust fan to outside air, minimum 12 in blade diameter

h. A direct telephone line and telephone including a FAX machine operating 24 hours per day, seven days per week

i. File cabinet with lock for Engineer

j. Sink with running water, attached drain board and drain capable of handling separate material

k. Metal stand for holding washing sieves

l. Two element hot plate or other comparable heating device, with dial type thermostatic controls for drying aggregates

m. Mechanical shaker and appropriate sieves (listed in JMF, Table 3) meeting the requirements of ASTM E-11 for determining the gradation of coarse and fine aggregates in accordance with ASTM C 136

n. Marshall testing equipment meeting ASTM D 6926, ASTM D 6927, or ASTM D 5581 as necessary, automatic compaction equipment capable of compacting three specimens at once and other apparatus as specified in ASTM C 127, D 2172, D 2726, and D 2041

o. Oven, thermostatically controlled, inside minimum 1 cubic foot

p. Two volumetric specific gravity flasks, 500 CC

q. Other necessary hand tools required for sampling and testing

r. Library containing contract specifications, latest ASTM volumes 4.01, 4.02,4.03 and 4.09, AASHTO standard specification parts I and II, and Asphalt Institute Publication MS-2

s. Equipment for Theoretical Specific Gravity testing including a 4,000 cc pycnometer, vacuum pump capable of maintaining 30 ml mercury pressure and a balance, 16-20 km with accuracy of 0.5 grams

t. Extraction equipment, centrifuge and reflux types and Rotoflex equipment

u. A masonry saw with diamond blade for trimming pavement cores and samples

v. Telephone

Approval of the plant and testing laboratory by the Engineer requires all facilities and equipment to be in good working order during production, sampling and testing. Failure to provide the specified facilities shall be sufficient cause for disapproving bituminous plant operations.

The Owner shall have access to the lab and at the plant whenever Contractor is producing asphalt for the project.

(3) Inspection of Plant. The Engineer, or Engineer's authorized representative, shall have access, at all times, to all areas of the plant for checking adequacy of equipment; inspecting operation of the plant: verifying weights, proportions, and material properties; and checking the temperatures maintained in the preparation of the mixtures.

(4) Storage Bins and Surge Bins. Use of surge bins or storage bins for temporary storage of hot bituminous mixtures will be permitted as follows:

a. The bituminous mixture may be stored in surge bins for a period of time not to exceed 3 hours.

b. The bituminous mixture may be stored in insulated storage bins for a period of time not to exceed 24 hours.

The bins shall be such that mix drawn from them meets the same requirements as mix loaded directly into trucks.

If the Engineer determines that there is an excessive amount of heat loss, segregation or oxidation of the mixture due to temporary storage, no temporary storage will be allowed.

403-4.3 HAULING EQUIPMENT. Trucks used for hauling bituminous mixtures shall have tight, clean, and smooth metal beds. To prevent the mixture from adhering to them, the truck beds shall be lightly coated with a minimum amount of an approved asphalt release agent. Petroleum products shall not be used for coating truck beds. Each truck shall have a suitable cover to protect the mixture from adverse weather. When necessary, to ensure that the mixture will be delivered to the site at the specified temperature, truck beds shall be insulated or heated and covers shall be securely fastened.

403-4.4 BITUMINOUS PAVERS. Bituminous pavers shall be self-propelled with an activated heated screed, capable of spreading and finishing courses of bituminous plant mix material that will meet the specified thickness, smoothness, and grade. The paver shall have sufficient power to propel itself and the hauling equipment without adversely affecting the finished surface.

The paver shall have a receiving hopper of sufficient capacity to permit a uniform spreading operation. The hopper shall be equipped with a distribution system to place the mixture uniformly in front of the screed without segregation. The screed shall effectively produce a finished surface of the required evenness and texture without tearing, shoving, or gouging the mixture.

The paver shall be equipped with a control system capable of automatically maintaining the specified screed elevation. The control system shall be automatically actuated from either a reference line and/or through a system of mechanical sensors or sensor-directed mechanisms or devices that will maintain the paver screed at a predetermined transverse slope and at the proper elevation to obtain the required surface. The transverse slope controller shall be capable of maintaining the screed at the desired slope within plus or minus 0.1 percent.

The controls shall be capable of working in conjunction with any of the following attachments:

a. Ski-type device of not less than 30 feet (9.14 m) in length

b. Taut stringline (wire) set to grade

c. Short ski or shoe

d. Laser control

If, during construction, it is found that the spreading and finishing equipment in use leaves tracks or indented areas, or produces other blemishes in the pavement and/or base course that are not satisfactorily corrected by the scheduled operations, the use of such equipment shall be discontinued and satisfactory equipment shall be provided by the Contractor.

403-4.5 ROLLERS. Rollers of the vibratory, steel wheel, and pneumatic-tired type shall be used. They shall be in good condition, capable of operating at slow speeds to avoid displacement of the bituminous mixture. The number, type, and weight of rollers shall be sufficient to compact the mixture to the required density while it is still in a workable condition.

All rollers shall be specifically designed and suitable for compacting hot mix bituminous concrete and shall be properly used. Rollers that impair the stability of any layer of a pavement structure or underlying soils shall not be used. Depressions in pavement surfaces caused by rollers shall be repaired by the Contractor at its own expense.

The use of equipment that causes crushing of the aggregate will not be permitted.

a. Nuclear Densometer. The Contractor shall have on site a nuclear densometer during all paving operations in order to assist in the determination of the optimum rolling pattern, type of roller and frequencies, as well as to monitor the effect of the rolling operations during production paving. The Contractor shall also supply a qualified technician during all paving operations to calibrate the nuclear densometer and obtain accurate density readings for all new bituminous concrete. These densities shall be supplied to the Engineer upon request at any time during construction. No separate payment will be made for supplying the density gauge and technician.

403-4.6 PREPARATION OF BITUMINOUS MATERIAL. The bituminous material shall be heated in a manner that will avoid local overheating and provide a continuous supply of the bituminous material to the mixer at a uniform temperature. The temperature of the bituminous material delivered to the mixer shall be sufficient to provide a suitable viscosity for adequate coating of the aggregate particles, but shall not exceed 325 °F (160 °C), unless otherwise required by the manufacturer.

403-4.7 PREPARATION OF MINERAL AGGREGATE. The aggregate for the mixture shall be heated and dried prior to introduction into the mixer. The maximum temperature and rate of heating shall be such that no damage occurs to the aggregates. The temperature of the aggregate and mineral filler shall not exceed 350 °F (175 °C) when the asphalt is added. Particular care shall be taken that aggregates high in calcium or magnesium content are not damaged by overheating. The temperature shall not be lower than is required to obtain complete coating and uniform distribution on the aggregate particles and to provide a mixture of satisfactory workability.

403-4.8 PREPARATION OF BITUMINOUS MIXTURE. The aggregates and the bituminous material shall be weighed or metered and introduced into the mixer in the amount specified by the job mix formula.

The combined materials shall be mixed until the aggregate obtains a uniform coating of bitumen and is thoroughly distributed throughout the mixture. Wet mixing time shall be the shortest time that will produce a satisfactory mixture, but not less than 25 seconds for batch plants. The wet mixing time for all plants shall be established by the Contractor, based on the procedure for determining the percentage of coated particles described in ASTM D 2489, for each individual plant and for each type of aggregate used. The wet mixing time will be set to achieve 95 percent of coated particles. For continuous mix plants, the minimum mixing time shall be determined by dividing the weight of its contents at operating level by the weight of the mixture delivered per second by the mixer. The moisture content of all bituminous mixtures upon discharge shall not exceed 0.5 percent.

403-4.9 PREPARATION OF THE UNDERLYING SURFACE. Immediately before placing the bituminous mixture, the underlying course shall be cleaned of all dust and debris. A prime coat or tack coat shall be applied in accordance with Item P-602 or P-603, if shown on the plans.

403-4.10 LAYDOWN PLAN, TRANSPORTING, PLACING, AND FINISHING. Prior to the placement of the bituminous mixture, the Contractor shall prepare a laydown plan for approval by the Engineer. This is to minimize the number of cold joints in the pavement. The laydown plan shall include the sequence of paving laydown by stations, width of lanes, temporary ramp locations, and laydown temperature. The laydown plan shall also include estimated time of completion for each portion of the work (that is, milling, paving, rolling, cooling, etc.). Modifications to the laydown plan shall be approved by the Engineer.

The bituminous mixture shall be transported from the mixing plant to the site in vehicles conforming to the requirements of paragraph 403-4.3. Deliveries shall be scheduled so that placing and compacting of mixture is uniform with minimum stopping and starting of the paver. Hauling over freshly placed material shall not be permitted until the material has been compacted, as specified, and allowed to cool to atmospheric temperature.

Paving during nighttime construction shall require the following:

a. All paving machines, rollers, distribution trucks and other vehicles required by the Contractor for his operations shall be equipped with artificial illumination sufficient to safely complete the work.

b. Minimum illumination level shall be twenty (20) horizontal foot candles and maintained in the following areas:

(1) An area of 30 feet wide by 30 feet long immediately behind the paving machines during the operations of the machines.

(2) An area 15 feet wide by 30 feet long immediately in front and back of all rolling equipment, during operation of the equipment.

(3) An area 15 feet wide by 15 feet long at any point where an area is being tack coated prior to the placement of pavement.

c. As partial fulfillment of the above requirements, the Contractor shall furnish and use, complete artificial lighting units with a minimum capacity of 3,000 watt electric beam lights, affixed to all equipment in such a way to direct illumination on the area under construction.

d. In addition, the Contractor shall furnish portable floodlights.

The initial placement and compaction of the mixture shall occur at a temperature suitable for obtaining density, surface smoothness, and other specified requirements but not less than 250 °F (121 °C).

Edges of existing bituminous pavement abutting the new work shall be saw cut and carefully removed as shown on the drawings and painted with bituminous tack coat before new material is placed against it.

Upon arrival, the mixture shall be placed to the full width by a bituminous paver. It shall be struck off in a uniform layer of such depth that, when the work is completed, it shall have the required thickness and

conform to the grade and contour indicated. The speed of the paver shall be regulated to eliminate pulling and tearing of the bituminous mat. Unless otherwise permitted, placement of the mixture shall begin along the centerline of a crowned section or on the high side of areas with a one-way slope. The mixture shall be placed in consecutive adjacent strips having a minimum width of fifteen (15) ft. except where edge lanes require less width to complete the area. Additional screed sections shall not be attached to widen paver to meet the minimum lane width requirements specified above unless additional auger sections are added to match. The longitudinal joint in one course shall offset the longitudinal joint in the course immediately below by at least 1 ft (30 cm); however, the joint in the surface top course shall be at the centerline of crowned pavements. Transverse joints in one course shall be offset by at least 10 feet (3 m) from transverse joints in the previous course.

Transverse joints in adjacent lanes shall be offset a minimum of 10 feet (3 m).

On areas where irregularities or unavoidable obstacles make the use of mechanical spreading and finishing equipment impractical, the mixture may be spread and luted by hand tools. Areas of segregation in the course, as determined by the Engineer, shall be removed and replaced at the Contractor's expense. The area shall be removed by saw cutting and milling a minimum of 2 in deep. The area to be removed and replaced shall be a minimum width of the paver and a minimum of 10 feet long.

403-4.11 COMPACTION OF MIXTURE. After placing, the mixture shall be thoroughly and uniformly compacted by power rollers. The surface shall be compacted as soon as possible when the mixture has attained sufficient stability so that the rolling does not cause undue displacement, cracking or shoving. The sequence of rolling operations and the type of rollers used shall be at the discretion of the Contractor. The speed of the roller shall, at all times, be sufficiently slow to avoid displacement of the hot mixture and be effective in compaction. Any displacement occurring as a result of reversing the direction of the roller, or from any other cause, shall be corrected at once.

Sufficient rollers shall be furnished to handle the output of the plant. Rolling shall continue until the surface is of uniform texture, true to grade and cross section, and the required field density is obtained.

To prevent adhesion of the mixture to the roller, the wheels shall be equipped with a scraper and kept properly moistened using a water soluble asphalt release agent approved by the engineer.

In areas not accessible to the roller, the mixture shall be thoroughly compacted with approved power driven tampers. Tampers shall weigh not less than 275 pounds, have a tamping plate width not less than 15 in, be rated at not less than 4,200 vibrations per minute, and be suitably equipped with a standard tamping plate wetting device.

Any mixture that becomes loose and broken, mixed with dirt, contains check-cracking, or in any way defective shall be removed and replaced with fresh hot mixture and immediately compacted to conform to the surrounding area. This work shall be done at the Contractor's expense. Skin patching shall not be allowed.

403-4.12 JOINTS. The formation of all joints shall be made in such a manner as to ensure a continuous bond between the courses and obtain the required density. All joints shall have the same texture as other sections of the course and meet the requirements for smoothness and grade.

The roller shall not pass over the unprotected end of the freshly laid mixture except when necessary to form a transverse joint. When necessary to form a transverse joint, it shall be made by means of placing a bulkhead or by tapering the course. The tapered edge shall be cut back to its full depth and width on a straight line to expose a vertical face prior to placing the adjacent lane. In both methods, all contact surfaces shall be given a tack coat of bituminous material before placing any fresh mixture against the joint.

Longitudinal joints which are irregular, damaged, uncompacted, or otherwise defective [or which have been left exposed for more than 4 hours, or whose surface temperature has cooled to less than 160^0 F]

shall be cut back [specify cutback] to expose a clean, sound surface for the full depth of the course. All contact surfaces shall be cleaned and dry and given a tack coat of bituminous material prior to placing any fresh mixture against the joint. The cost of this work and tack coat shall be considered incidental to the cost of the bituminous course.

MATERIAL ACCEPTANCE

403-5.1 ACCEPTANCE SAMPLING AND TESTING. Unless otherwise specified, all acceptance sampling and testing necessary to determine conformance with the requirements specified in this section will be performed by the Engineer at no cost to the Contractor. Testing organizations performing these tests shall meet the requirements of ASTM D 3666. The laboratory accreditation must be current and listed on the accrediting authority's website. All test methods required for acceptance sampling and testing must be listed on the lab accreditation. A copy of the laboratory's current accreditation and accredited test methods shall be submitted to the Engineer prior to start of construction. All equipment in Contractor furnished laboratories shall be calibrated by an independent testing organization prior to the start of operations.

a. Field Placed Material. Material placed in the field shall be tested for mat and joint density on a lot basis. A lot will consist of:

- One day or shift's production not to exceed 2,000 tons (1,814 t), or
- A half day or shift's production where a day's production is expected to consist of between 2,000 and 4,000 tons (1,814 and 3,628 t), or similar subdivisions for tonnages over 4,000 tons (3,628 t).

Where more than one plant is simultaneously producing material for the job, the lot sizes shall apply separately for each plant.

(1) Mat Density. The lot shall be divided into four equal sublots. One core of finished, compacted materials shall be taken by the Contractor from each sublot. Core locations will be determined by the Engineer on a random basis in accordance with procedures contained in ASTM D 3665. Cores shall not be taken closer than 1 ft from a transverse or longitudinal joint.

(2) Joint Density. The lot shall be divided into four equal sublots. One core of finished, compacted materials shall be taken by the Contractor from each sublot. Core locations will be determined by the Engineer on a random basis in accordance with procedures contained in ASTM D 3665. Edge of cores will be taken within 6 in of the joint of the same lot material but not directly on the joint.

(3) Sampling. Samples shall be neatly cut with a core drill. The cutting edge of the core drill bit shall be of hardened steel or other suitable material with diamond chips embedded in the metal cutting edge. The minimum diameter of the sample shall be 5 in. Samples that are clearly defective, as a result of sampling, shall be discarded and another sample taken. The Contractor shall furnish all tools, labor, and materials for cutting samples, cleaning, and filling the cored pavement. Cored pavement shall be cleaned and core holes shall be filled in a manner acceptable to the Engineer and within one day after sampling.

(4) Testing. The bulk specific gravity of each cored sample will be measured by the Engineer in accordance with ASTM D 2726 or ASTM D 1188, whichever is applicable. The percent compaction (density) of each sample will be determined by dividing the bulk specific gravity of each sublot sample by the average bulk specific gravity of all laboratory prepared specimens for the lot, as determined as follows:

(a) Sufficient material for preparation of test specimens for all testing will be sampled by the Engineer on a random basis, in accordance with the procedures contained in ASTM D 3665. One set of

laboratory compacted specimens will be prepared for each sublot in accordance with ASTM D 6926, at the number of blows required by paragraph 403-3.2, Table 1. Each set of laboratory compacted specimens will consist of three test portions prepared from the same sample increment. The sample of bituminous mixture may be put in a covered metal tin and placed in an oven for not less than 30 minutes or more than 60 minutes to stabilize to compaction temperature. The compaction temperature of the specimens shall be as specified in the job mix formula.

(b) The bulk specific gravity of each test specimen shall be measured by the Engineer in accordance with ASTM D 2726 using the procedure for laboratory-prepared thoroughly dry specimens, or ASTM D 1188, whichever is applicable, for use in computing pavement density.

(c) The bulk specific gravity used to determine the joint density at joints formed between different lots shall be the lowest of the bulk specific gravity values from the two different lots.

(5) Acceptance. Acceptance of field placed material for mat and joint density will be determined by the Engineer in accordance with the requirements of paragraph 403-5.2b.

d. Partial Lots - Field Placed Material. When operational conditions cause a lot to be terminated before the specified number of tests have been made for the lot, or when the Contractor and Engineer agree in writing to allow overages or other minor tonnage placements to be considered as partial lots, the following procedure will be used to adjust the lot size and the number of tests for the lot.

The last batch produced where production is halted will be sampled, and its properties shall be considered as representative of the particular sublot from which it was taken. In addition, an agreed to minor placement will be sampled, and its properties shall be considered as representative of the particular sublot from which it was taken. Where three sublots are produced, they shall constitute a lot. Where one or two sublots are produced, they shall be incorporated into the next lot, and the total number of sublots shall be used in the acceptance plan calculation, that is, $n = 5$ or $n = 6$, for example. Partial lots at the end of asphalt production on the project shall be included with the previous lot.

403-5.2 ACCEPTANCE CRITERIA.

a. General. Acceptance will be based on the following characteristics of the bituminous mixture and completed pavement and test results:

(1) Mat density

(2) Joint density

(3) Thickness

(4) Smoothness

(5) Grade

Mat density will be evaluated for acceptance in accordance with paragraph 403-5.2b(1). Joint density will be evaluated for acceptance in accordance with paragraph 403-5.2b(2).

Thickness will be evaluated by the Engineer for compliance in accordance with paragraph 403-5.2b(3). Acceptance for smoothness will be based on the criteria contained in paragraph 403-5.2b(4). Acceptance for grade will be based on the criteria contained in paragraph 403-5.2b(5).

The Engineer may at any time, notwithstanding previous plant acceptance, reject and require the Contractor to dispose of any batch of bituminous mixture which is rendered unfit for use due to contamination, segregation, incomplete coating of aggregate, or improper mix temperature. Such rejection may be based on only visual inspection or temperature measurements. In the event of such rejection, the Contractor may take a representative sample of the rejected material in the presence of the Engineer, and if it can be demonstrated in the laboratory, in the presence of the Engineer, that such material was erroneously rejected, payment will be made for the material at the contract unit price.

b. Acceptance Criteria.

(1) Mat Density. Acceptance of each lot of plant produced material for mat density shall be based on the average of all of the densities taken from the sublots. If the average mat density of the lot so established equals or exceeds 96 percent, the lot shall be acceptable. If the average mat density of the lot is below 96 percent, the lot shall be removed and replaced at the Contractor's expense.

(2) Joint Density. Acceptance of each lot of plant produced material for joint density shall be based on the average of all of the joint densities taken from the sublots. If the average joint density of the lot so established equals or exceeds 94 percent, the lot shall be acceptable. If the average joint density of the lot is less than 94 percent, the Contractor shall stop production and evaluate the method of compacting joints. Production may resume once the reason for poor compaction has been determined and appropriate measures have been taken to ensure proper compaction.

(3) Thickness. Thickness of each course shall be evaluated by the Engineer for compliance to the requirements shown on the plans. Measurements of thickness shall be made by the Engineer using the cores extracted for each sublot for density measurement. The maximum allowable deficiency at any point shall not be more than ¼ in less than the thickness indicated for the lift. Average thickness of lift, or combined lifts, shall not be less than the indicated thickness. Where thickness deficiency exceeds the specified tolerances, the lot or sublot shall be corrected by the Contractor at his expense by removing the deficient area and replacing with new pavement. The Contractor, at his expense, may take additional cores as approved by the Engineer to circumscribe the deficient area.

(4) Smoothness. The final surface shall be free from roller marks. The finished surfaces of each course of the pavement, except the finished surface of the final surface course, shall not vary more than ⅜ in when evaluated with a 16 ft straightedge. The finished surface of the final surface course shall not vary more than ¼ in when evaluated with a 16 ft straightedge. The lot size shall be [ ] square yards (sq m). Smoothness measurements shall be made at 50 ft intervals and as determined by the Engineer. In the longitudinal direction, a smoothness reading shall be made at the center of each paving lane. In the transverse direction, smoothness readings shall be made continuously across the full width of the pavement. However, transverse smoothness readings shall not be made across designed grade changes. At warped transition areas, straightedge position shall be adjusted to measure surface smoothness and not design grade transitions. When more than 15 percent of all measurements within a lot exceed the specified tolerance, the Contractor shall remove the deficient area to the depth of the course of pavement and replace with new material. Skin patching shall not be permitted. Isolated high points may be ground off providing the course thickness complies with the thickness specified on the plans. High point grinding will be limited to 15 sq yd. Areas in excess of 15 sq yd will require removal and replacement of the course in accordance with the limitations noted above.

(5) Grade. The finished surface of the pavement shall not vary from the gradeline elevations and cross sections shown on the plans by more than ½ in (12.70 mm). The finished grade of each lot will be determined by running levels at intervals of 50 feet (15.2 m) or less longitudinally and all breaks in grade transversely (not to exceed 50 feet) to determine the elevation of the completed pavement. The Contractor shall pay the cost of surveying of the level runs that shall be performed by a licensed surveyor. The documentation, stamped and signed by a licensed surveyor, shall be provided by the Contractor to the Engineer. The lot size shall be [ ] square yards (square meters). When more than 15 percent of all the measurements within a lot are outside the specified tolerance, or if any one shot within the lot deviates ¾ in or more from planned grade, the Contractor shall remove the deficient area to the depth of the final course of pavement and replace with new material. Skin patching shall not be permitted. Isolated high points may be ground off providing the course thickness complies with the thickness specified on the plans. High point grinding will be limited to 15 sq yd. The surface of the ground pavement shall have a texture consisting of grooves between 0.090 and 0.130 in wide. The peaks and ridges shall be approximately 1/32 in higher than the bottom of the grooves. The pavement shall be left in a clean

condition. The removal of all of the slurry resulting from the grinding operation shall be continuous. The grinding operation should be controlled so the residue from the operation does not flow across other lanes of pavement. Areas in excess of 15 sq yd will require removal and replacement of the pavement in accordance with the limitations noted above.

c. Density Outliers. If the tests within a lot include a very large or a very small value that appears to be outside the normal limits of variation, check for an outlier in accordance with ASTM E 178, at a significance level of 5 percent, to determine if this value should be discarded.

403-5.3 RESAMPLING PAVEMENT FOR MAT DENSITY.

a. General. Resampling of a lot of pavement will only be allowed for mat density and then, only if the Contractor requests same in writing, within 48 hours after receiving the written test results from the Engineer. A retest will consist of all the sampling and testing procedures contained in paragraphs 403-5.1b(1). Only one resampling per lot will be permitted.

(1) A redefined mat density shall be calculated for the resampled lot. The number of tests used to calculate the redefined mat density shall include the initial tests made for that lot plus the retests.

(2) The cost for resampling and retesting shall be borne by the Contractor.

b. Payment for Resampled Lots. The redefined mat density for a resampled lot shall be used to evaluate the acceptance of that lot in accordance with Paragraph 403-5.2.

403-5.4 LEVELING COURSE. Any course used for truing and leveling shall meet the requirements of paragraph 403-3.2, but shall not be subject to the density requirements of paragraph 403-5.1. The leveling course shall be compacted with the same effort used to achieve density of the test section. The truing and leveling course shall not exceed a nominal thickness of 1-½ in (37.5 mm). The leveling course is the first variable thickness lift of an overlay placed prior to subsequent courses.]

CONTRACTOR QUALITY CONTROL

403-6.1 GENERAL. The Contractor shall perform quality control sampling, testing, and inspection during all phases of the work and shall perform them at a rate sufficient to ensure that the work conforms to the contract requirements, and at minimum test frequencies required by paragraph 403-6.3, including but not limited to:

a. Mix Design

b. Aggregate Grading

c. Quality of Materials

d. Stockpile Management

e. Proportioning

f. Mixing and Transportation

g. Placing and Finishing

h. Joints

i. Compaction

j. Surface smoothness

403-6.2 TESTING LABORATORY. The Contractor shall provide a fully equipped asphalt laboratory meeting the requirements of paragraph 403-3.5 and 403-4.2a(2) located at the plant or job site. The

Contractor shall provide the Engineer with certification stating that all of the testing equipment to be used is properly calibrated and will meet the specifications applicable for the specified test procedures.

403-6.3 QUALITY CONTROL TESTING. The Contractor shall perform all quality control tests necessary to control the production and construction processes applicable to these specifications and as set forth in the approved Quality Control Program. The testing program shall include, but not necessarily be limited to, tests for the control of asphalt content, aggregate gradation, temperatures, aggregate moisture, field compaction, and surface smoothness.

a. Asphalt Content. A minimum of two tests shall be performed per lot in accordance with ASTM D 2172 for determination of asphalt content. The weight of ash portion of the test, as described in ASTM D 2172, shall be determined as part of the first test performed at the beginning of plant production; and as part of every tenth test performed thereafter, for the duration of plant production. The last weight of ash value obtained shall be used in the calculation of the asphalt content for the mixture. The asphalt content for the lot will be determined by averaging the test results.

The use of the nuclear method for determining asphalt content in accordance with ASTM D 4125 is permitted, provided that it is calibrated for the specific mix being used.

b. Gradation. Aggregate gradations shall be determined a minimum of twice per lot from mechanical analysis of extracted aggregate in accordance with ASTM D 5444 and ASTM C 136 (dry sieve). When asphalt content is determined by the nuclear method, aggregate gradation shall be determined from hot bin samples on batch plants, or from the cold feed on drum mix or continuous mix plants, and tested in accordance with ASTM C 136 (dry sieve) using actual batch weights to determine the combined aggregate gradation of the mixture.

c. Moisture Content of Aggregate. The moisture content of aggregate used for production shall be determined a minimum of once per lot in accordance with ASTM C 566.

d. Moisture Content of Mixture. The moisture content of the mixture shall be determined once per lot in accordance with ASTM D 1461 [or AASHTO T 110].

e. Temperatures. Temperatures shall be checked, at least four times per lot, at necessary locations to determine the temperatures of the dryer, the bitumen in the storage tank, the mixture at the plant, and the mixture at the job site.

f. In-Place Density Monitoring. The Contractor shall conduct any necessary testing to ensure that the specified density is being achieved. A nuclear gauge may be used to monitor the pavement density in accordance with ASTM D 2950.

g. Additional Testing. Any additional testing that the Contractor deems necessary to control the process may be performed at the Contractor's option.

h. Monitoring. The Engineer reserves the right to monitor any or all of the above testing.

403-6.4 SAMPLING. When directed by the Engineer, the Contractor shall sample and test any material that appears inconsistent with similar material being sampled, unless such material is voluntarily removed and replaced or deficiencies corrected by the Contractor. All sampling shall be in accordance with standard procedures specified.

403-6.5 CONTROL CHARTS. The Contractor shall maintain linear control charts both for individual measurements and range (that is, difference between highest and lowest measurements) for aggregate gradation and asphalt content.

Control charts shall be posted in a location satisfactory to the Engineer and shall be kept current. As a minimum, the control charts shall identify the project number, the contract item number, the test number, each test parameter, the Action and Suspension Limits applicable to each test parameter, and the Contractor's test results. The Contractor shall use the control charts as part of a process control system for identifying potential problems and assignable causes before they occur. If the Contractor's projected data during production indicates a problem and the Contractor is not taking satisfactory corrective action, the Engineer may suspend production or acceptance of the material.

a. Individual Measurements. Control charts for individual measurements shall be established to maintain process control within tolerance for aggregate gradation and asphalt content. The control charts shall use the job mix formula target values as indicators of central tendency for the following test parameters with associated Action and Suspension Limits:

Control Chart Limits For Individual Measurements		
Sieve	**Action Limit**	**Suspension Limit**
¾ in (19.0 mm)	0%	0%
½ in (12.5 mm)	+/-6%	+/-9%
⅜ in (9.5 mm)	+/-6%	+/-9%
No. 4 (4.75 mm)	+/-6%	+/-9%
No. 16 (1.18 mm)	+/-5%	+/-7.5%
No. 50 (0.30 mm)	+/-3%	+/-4.5%
No. 200 (0.075 mm)	+/-2%	+/-3%
Asphalt Content	+/-0.45%	+/-0.70%

b. Range. Control charts for range shall be established to control process variability for the test parameters and Suspension Limits listed below. The range shall be computed for each lot as the difference between the two test results for each control parameter. The Suspension Limits specified below are based on a sample size of n = 2. Should the Contractor elect to perform more than two tests per lot, the Suspension Limits shall be adjusted by multiplying the Suspension Limit by 1.18 for n = 3 and by 1.27 for n = 4.

Control Chart Limits Based On Range (Based On n = 2)	
Sieve	**Suspension Limit**
½ in (12.5 mm)	11 percent
⅜ in (9.5 mm)	11 percent
No. 4 (4.75 mm)	11 percent
No. 16 (1.18 mm)	9 percent
No. 50 (0.30 mm)	6 percent
No. 200 (0.075 mm)	3.5 percent
Asphalt Content	0.8 percent

c. Corrective Action. The Contractor Quality Control Program shall indicate that appropriate action shall be taken when the process is believed to be out of tolerance. The Plan shall contain sets of rules to gauge when a process is out of control and detail what action will be taken to bring the process into control. As a minimum, a process shall be deemed out of control and production stopped and corrective action taken, if:

(1) One point falls outside the Suspension Limit line for individual measurements or range; or

(2) Two points in a row fall outside the Action Limit line for individual measurements.

403-6.6 QUALITY CONTROL REPORTS. The Contractor shall maintain records and shall submit reports of quality control activities daily.

METHOD OF MEASUREMENT

403-7.1 MEASUREMENT. Plant mix bituminous concrete pavement shall be measured by the number of tons of bituminous mixture used in the accepted work. Recorded batch weights or truck scale weights will be used to determine the basis for the tonnage.

BASIS OF PAYMENT

403-8.1 PAYMENT. Payment for a lot of bituminous concrete pavement meeting all acceptance criteria as specified in paragraph 403-5.2 shall be made at the contract unit price per ton (kg) for bituminous mixture. The price shall be compensation for furnishing all materials, for all preparation, mixing, and placing of these materials, and for all labor, equipment, tools, and incidentals necessary to complete the item.

Payment will be made under:

Item P-403-8.1a Bituminous Leveling Course - per ton

TESTING REQUIREMENTS

ASTM C 29	Bulk Density ("Unit Weight") and Voids in Aggregate
ASTM C 88	Soundness of Aggregates by Use of Sodium Sulfate or Magnesium Sulfate
ASTM C 117	Materials Finer than 75 μm (No. 200) Sieve in Mineral Aggregates by Washing
ASTM C 127	Specific Gravity and Absorption of Coarse Aggregate
ASTM C 131	Resistance to Degradation of Small Size Coarse Aggregate by Abrasion and Impact in the Los Angeles Machine
ASTM C 136	Sieve Analysis of Fine and Coarse Aggregates
ASTM C 183	Sampling and the Amount of Testing of Hydraulic Cement
ASTM C 566	Total Evaporable Moisture Content of Aggregate by Drying
ASTM D 75	Sampling Aggregates

ASTM D 979	Sampling Bituminous Paving Mixtures
ASTM D 995	Mixing Plants for Hot-Mixed Hot-Laid Bituminous Paving Mixtures
ASTM D 1073	Fine Aggregate for Bituminous Paving Mixtures
ASTM D 1074	Compressive Strength of Bituminous Mixtures
ASTM D 1188	Bulk Specific Gravity and Density of Compacted Bituminous Mixtures Using Paraffin-Coated Specimens
ASTM D 1461	Moisture or Volatile Distillates in Bituminous Paving Mixtures
ASTM D 2041	Theoretical Maximum Specific Gravity and Density of Bituminous Paving Mixtures
ASTM D 2172	Quantitative Extraction of Bitumen from Bituminous Paving Mixtures
ASTM D 2419	Sand Equivalent Value of Soils and Fine Aggregate
ASTM D 2489	Estimating Degree of Particle Coating of Bituminous-Aggregate Mixtures
ASTM D 2726	Bulk Specific Gravity and Density of Non-Absorptive Compacted Bituminous Mixtures
ASTM D 2950	Density of Bituminous Concrete in Place by Nuclear Methods
ASTM D 3203	Percent Air Voids in Compacted Dense and Open Bituminous Paving Mixtures
ASTM D 3665	Random Sampling of Construction Materials
ASTM D 3666	Minimum Requirements for Agencies Testing and Inspecting Road and Paving Materials
ASTM D 4125	Asphalt Content of Bituminous Mixtures by the Nuclear Method
ASTM D 4318	Liquid Limit, Plastic Limit, and Plasticity Index of Soils
ASTM D 4791	Flat Particles, Elongated Particles, or Flat and Elongated Particles in Coarse Aggregate
ASTM D 4867	Effect of Moisture on Asphalt Concrete Paving Mixtures
ASTM D 5444	Mechanical Size Analysis of Extracted Aggregate
ASTM D 5581	Resistance to Plastic Flow of Bituminous Mixtures Using Marshall Apparatus (6" Diameter Specimen)
ASTM D 6926	Preparation of Bituminous Specimens Using MARSHALL Apparatus
ASTM D 6927	MARSHALL Stability and Flow of Bituminous Mixtures

ASTM E 11	Wire-Cloth Sieves for Testing Purposes
ASTM E 178	Dealing with Outlying Observations
AASHTO T 30	Mechanical Analysis of Extracted Aggregate
[AASHTO T 110	Moisture or Volatile Distillates in Bituminous Paving Mixtures]
The Asphalt Institute's Manual No. 2 (MS-2)	Mix Design Methods for Asphalt Concrete

MATERIAL REQUIREMENTS

ASTM D 242	Mineral Filler for Bituminous Paving Mixtures
ASTM D 946	Penetration Graded Asphalt Cement for Use in Pavement Construction
ASTM D 3381	Viscosity-Graded Asphalt Cement for Use in Pavement Construction
ASTM D 4552	Classifying Hot-Mix Recycling Agents
AASHTO MP1	Performance Graded Binder Designation

END OF ITEM P-403

PART VI – RIGID PAVEMENT

ITEM P-501 PORTLAND CEMENT CONCRETE PAVEMENT

DESCRIPTION

501-1.1 This work shall consist of pavement composed of Portland cement concrete, **with reinforcement** constructed on a prepared underlying surface in accordance with these specifications and shall conform to the lines, grades, thickness, and typical cross sections shown on the plans.

MATERIALS

501-2.1 AGGREGATES.

a. Reactivity. Aggregates shall be tested for deleterious reactivity with alkalis in the cement, which may cause excessive expansion of the concrete. Tests of coarse and fine aggregate shall be made in accordance with ASTM C 1260. If the expansion of the coarse or fine aggregate test specimens, tested in accordance with ASTM C 1260, does not exceed 0.10 % at 16 days from casting, the coarse or fine aggregates shall be accepted.

If the expansion at 16 days is greater than 0.10%, tests of combined materials shall be made in accordance with ASTM C 1260 or ASTM C 1567 using the aggregates, cementitious materials, and/or specific reactivity reducing chemicals in the proportions proposed for the mixture design. If the expansion of the proposed combined materials test specimens, tested in accordance with ASTM C 1260 or ASTM C 1567, does not exceed 0.10 % at 30 days from casting, the proposed combined materials will be accepted. If the expansion of the proposed combined materials test specimens is greater than 0.10% at 30 days, the aggregates will not be accepted unless adjustments to the combined materials mixture can reduce the expansion to less than 0.10 % at 30 days, or new aggregates shall be evaluated and tested.

b. Fine Aggregate. Fine aggregate shall conform to the requirements of ASTM C 33. Gradation shall meet the requirements of Table 1 when tested in accordance with ASTM C 136, except as may otherwise be qualified under Section 6 of ASTM C 33.

TABLE 1. GRADATION FOR FINE AGGREGATE (ASTM C 33)

Sieve Designation (Square Openings)	Percentage by Weight Passing Sieves
3/8 in. (9.5 mm)	100
No. 4 (4.75 mm)	95-100
No. 8 (2.36 mm)	80-100
No. 16 (1.18 mm)	50-85
No. 30 (600 micro-m)	25-60
No. 50 (300 micro-m)	10-30
No. 100 (150 micro-m)	2-10

c. Coarse Aggregate. Coarse aggregate shall conform to the requirements of ASTM C 33. Gradation, within the separated size groups, shall meet the requirements of Table 2 when tested in accordance with ASTM C 136.

Aggregates delivered to the mixer shall consist of crushed stone, crushed or uncrushed gravel, air-cooled blast furnace slag, crushed recycled concrete pavement, or a combination thereof. The aggregate shall be composed of clean, hard, uncoated particles and shall meet the requirements for deleterious substances contained in ASTM C 33. Dust and other coating shall be removed from the aggregates by washing. The aggregate in any size group shall not contain more than 8 percent by weight of flat or elongated pieces when tested in accordance with ASTM D 4791. A flat or elongated particle is one having a ratio between the maximum and the minimum dimensions of a

circumscribing rectangular prism exceeding 5 to 1.The percentage of wear shall be no more than 40% when tested in accordance with ASTM C 131 or ASTM C 535.

TABLE 2. GRADATION FOR COARSE AGGREGATE ASTM C 33

Sieve Designations (square openings)		Percentage by Weight Passing Sieves
in.	mm	
2-1/2	63	---
2	50.8	100
1-1/2	38.1	90-100
1	25.0	20-55
3/4	19.0	0-15
1/2	12.5	---
3/8	9.5	0-5
No. 4	4.75	---
No. 8	2.36	---

Aggregate susceptibility to Disintegration (D) Cracking. Aggregates that have a history of D-cracking shall not be used. Prior to approval of mixture design and production of Portland cement concrete the Contractor shall submit written certification that the aggregate does not have a history of D-Cracking and that the aggregate meets the specified State requirements.

(1) Other sources of crushed stone aggregate shall be approved if the durability factor as determined by ASTM C 666 is greater than or equal to 95 and all other quality test requirements within these specifications are fulfilled. The FAA will consider and reserves final approval of other State classification procedures.

(2) Crushed gravel and sand-gravel aggregates shall not be required to meet freeze-thaw durability ratings. These aggregates shall be approved for use in concrete by the state highway agency in the state from which the aggregate originates and the state in which they are to be used and shall meet all other criteria within these specifications.

501-2.2 CEMENT. Cement shall conform to the requirements of ASTM C150 Type1,1A or ASTM C150 Type 1P.

If for any reason, cement becomes partially set or contains lumps of caked cement, it shall be rejected. Cement salvaged from discarded or used bags shall not be used.

Only cements containing less than 0.6% equivalent alkali or cements that can demonstrate a positive reduction in the expansion created by alkali-silica reactions shall be used.

501-2.3 CEMENTITIOUS MATERIALS.

a. Fly Ash or Natural Pozzolan. Fly ash shall meet the requirements of ASTM C 618, Class C, F, or N with the exception of loss of ignition, where the maximum shall be less than 6 percent for Class F or NFly ash such as is produced in furnace operations utilizing liming materials or soda ash (sodium carbonate) as an additive shall not be acceptable. The Contractor shall furnish vendor's certified test reports for each shipment of Fly Ash used in the project. The vendor's certified test report can be used for acceptance or the material may be tested independently by the Engineer.

b. Blast Furnace Slag (Slag Cement). Ground Granulated Blast Furnace (GGBF) slag shall conform to ASTM C 989, Grade 100 or 120. GGBF shall be used only at a rate between 25 and 55 percent of the total cementitious material by mass.

501-2.4 PREMOLDED JOINT FILLER. Premolded joint filler for expansion joints shall conform to the requirements of ASTM D 1751 and shall be punched to admit the dowels where called for on the plans. The filler for each joint shall be furnished in a single piece for the full depth and width required for the joint, unless otherwise specified by the Engineer. When the use of more than one piece is required for a joint, the abutting ends shall be fastened securely and held accurately to shape by stapling or other positive fastening means satisfactory to the Engineer.

501-2.5 JOINT SEALER. The joint sealer for the joints in the concrete pavement shall meet the requirements of f Item P-605 and shall be of the type(s) specified in the plans.

501-2.6 STEEL REINFORCEMENT. Reinforcing shall consist of welded steel wire fabric conforming to the requirements of ASTM A 185. Welded wire fabric shall be furnished in flat sheets only.

501-2.7 DOWEL AND TIE BARS. Tie bars shall be deformed steel bars and conform to the requirements of ASTM A 615 or ASTM A 996, except that rail steel bars, Grade 50 or 60, shall not be used for tie bars that are to be bent or restraightened during construction. Tie bars designated as Grade 40 in ASTM A 615 can be used for construction requiring bent bars.

Dowel bars shall be plain steel bars conforming to ASTM A 615 or ASTM A 966 and shall be free from burring or other deformation restricting slippage in the concrete. High strength dowel bars shall conform to ASTM A 714, Class 2, Type S, Grade I, II or III, Bare Finish. Before delivery to the construction site each dowel bar shall be painted with one coat of paint conforming to MIL-DTL-24441/20A.SSPC Paint 5 or SSPC Paint 25.Metal or plastic collars shall be full circular device supporting the dowel until the epoxy hardens.

The sleeves for dowel bars used in expansion joints shall be metal or other type of an approved design to cover 2 to 3 inches (50 mm to 75 mm) of the dowel, with a closed end and with a suitable stop to hold the end of the bar at least 1 inch (25 mm) from the closed end of the sleeve. Sleeves shall be of such design that they will not collapse during construction.

501-2.8 WATER. Water used in mixing or curing shall be clean and free of oil, salt, acid, alkali, sugar, vegetable, or other substances injurious to the finished product. Water will be tested in accordance with the requirements of AASHTO T 26. Water known to be of potable quality may be used without testing.

501-2.9 COVER MATERIAL FOR CURING. Curing materials shall conform to one of the following specifications:

a. Liquid membrane-forming compounds for curing concrete shall conform to the requirements of ASTM C 309, Type 2, Class B, or Class A if wax base only.

b. White polyethylene film for curing concrete shall conform to the requirements of ASTM C 171.

c. White burlap-polyethylene sheeting for curing concrete shall conform to the requirements of ASTM C 171.

d. Waterproof paper for curing concrete shall conform to the requirements of ASTM C 171.

501-2.10 ADMIXTURES. The use of any material added to the concrete mix shall be approved by the Engineer. The Contractor shall submit certificates indicating that the material to be furnished meets all of the requirements indicated below. In addition, the Engineer may require the Contractor to submit complete test data from an approved laboratory showing that the material to be furnished meets all of the requirements of the cited specifications. Subsequent tests may be made of samples taken by the Engineer from the supply of the material being furnished or proposed for use on the work to determine whether the admixture is uniform in quality with that approved.

a. Air-Entraining Admixtures. Air-entraining admixtures shall meet the requirements of ASTM C 260 and shall consistently entrain the air content in the specified ranges under field conditions. The air-entrainment agent and any water reducer admixture shall be compatible.

b. Chemical Admixtures. Water-reducing, set retarding, and set-accelerating admixtures shall meet the requirements of ASTM C 494, including the flexural strength test.

501-2.11 EPOXY-RESIN. Epoxy-resin used to anchor dowels and tie bars in pavements shall conform to the requirements of ASTM C 881, Type I, Grade 3, Class C. Class A or B shall be used when the surface temperature of the hardened concrete is below 60 degrees F (16 degrees C).

501-2.12 MATERIAL ACCEPTANCE. Prior to use of materials, the Contractor shall submit certified test reports to the Engineer for those materials proposed for use during construction. The certification shall show the appropriate ASTM test(s) for each material, the test results, and a statement that the material passed or failed.

The Engineer may request samples for testing, prior to and during production, to verify the quality of the materials and to ensure conformance with the applicable specifications.

MIX DESIGN

501-3.1 PROPORTIONS. Concrete shall be designed to achieve a 28-day flexural strength that meets or exceeds the acceptance criteria contained in paragraph 501-5.2 for a flexural strength of 650 psi. The mix shall be designed using the procedures contained in Chapter 9 of the Portland Cement Association's manual, "Design and Control of Concrete Mixtures".
The Contractor shall note that to ensure that the concrete actually produced will meet or exceed the acceptance criteria for the specified strength, the mix design average strength must be higher than the specified strength. The amount of overdesign necessary to meet specification requirements depends on the producer's standard deviation of flexural test results and the accuracy that that value can be estimated from historic data for the same or similar materials.

The minimum cementitious material (cement plus fly ash, or GGBFS) shall be 564 pounds per cubic yard (227 kg per cubic meter). The ratio of water to cementitious material, including free surface moisture on the aggregates but not including moisture absorbed by the aggregates shall not be more than .45 by weight.

Prior to the start of paving operations and after approval of all material to be used in the concrete, the Contractor shall submit a mix design showing the proportions and flexural strength obtained from the concrete at 7 and 28 days. The mix design shall include copies of test reports, including test dates, and a complete list of materials including type, brand, source, and amount of cement, fly ash, ground slag, coarse aggregate, fine aggregate, water, and admixtures. The fineness modulus of the fine aggregate and the air content shall also be shown. The mix design shall be submitted to the Engineer at least 10 days prior to the start of operations. The submitted mix design shall not be more than 90 days old. Production shall not begin until the mix design is approved in writing by the Engineer.

Should a change in sources be made, or admixtures added or deleted from the mix, a new mix design must be submitted to the Engineer for approval.

Flexural strength test specimens shall be prepared in accordance with ASTM C 192 and tested in accordance with ASTM C 78. The mix determined shall be workable concrete having a slump for side-form concrete between 1 and 2 inches (25 mm and 50 mm) as determined by ASTM C 143. For vibrated slip-form concrete, the slump shall be between 1/2 inch (13 mm) and 1 1/2 inches (38 mm).

501-3.2 CEMENTITIOUS MATERIALS.

a. Fly Ash. Fly ash may be used in the mix design. When fly ash is used as a partial replacement for cement, the minimum cement content may be met by considering Portland cement plus fly ash as the total cementitious material. The replacement rate shall be determined from laboratory trial mixes, but shall be between 20 and 30 percent by weight of the total cementitious material. If fly ash is used in conjunction with ground granular blast furnace slag the maximum replacement rate shall not exceed 10 percent by weight of total cementitious material.

b. Ground Slag. Ground blast-furnace slag may be used in a mix design containing Type I or Type II cement. The slag, or slag plus fly ash if both are used, may constitute between 25 to 55 percent of the total cementitious material by weight. If the concrete is to be used for slipforming operations and the air temperature is expected to be lower than 55 degrees F (13 degrees C) the percent slag shall not exceed 30 percent by weight.

501-3.3 ADMIXTURES.

a. Air-Entraining. Air-entraining admixture shall be added in such a manner that will insure uniform distribution of the agent throughout the batch. The air content of freshly mix air-entrained concrete shall be based upon trial mixes with the materials to be used in the work adjusted to produce concrete of the required plasticity and workability. The percentage of air in the mix shall be 2.5 percent. Air content shall be determined by testing in accordance with ASTM C 231 for gravel and stone coarse aggregate and ASTM C 173 for slag and other highly porous coarse aggregate.

b. Chemical. Water-reducing, set-controlling, and other approved admixtures shall be added to the mix in the manner recommended by the manufacturer and in the amount necessary to comply with the specification requirements. Tests shall be conducted on trial mixes, with the materials to be used in the work, in accordance with ASTM C 494.

501-3.4 TESTING LABORATORY. The laboratory used to develop the mix design shall meet the requirements of ASTM C 1077. The laboratory accreditation will include ASTM C 78. A certification that it meets these requirements shall be submitted to the Engineer prior to the start of mix design. The certification shall include evidence that the laboratory is inspected/accredited for the test methods required herein by a nationally recognized laboratory inspection accreditation organization.

CONSTRUCTION METHODS

501-4.1 EQUIPMENT. Equipment necessary for handling materials and performing all parts of the work shall be approved by the engineer as to design, capacity, and mechanical conditions. The equipment shall be at the jobsite sufficiently ahead of the start of paving operations to be examined thoroughly and approved.

a. Batch Plant and Equipment. The batch plant and equipment shall conform to the requirements of ASTM C 94.

b. Mixers and Transportation Equipment.

(1) General. Concrete may be mixed at a central plant, or wholly or in part in truck mixers. Each mixer shall have attached in a prominent place a manufacturer's nameplate showing the capacity of the drum in terms of volume of mixed concrete and the speed of rotation of the mixing drum or blades.

(2) Central plant mixer. Central plant mixers shall conform to the requirements of ASTM C 94.

The mixer shall be examined daily for changes in condition due to accumulation of hard concrete or mortar or wear of blades. The pickup and throwover blades shall be replaced when they have worn down 3/4 inch (19 mm) or more. The Contractor shall have a copy of the manufacturer's design on hand showing dimensions and arrangement of blades in reference to original height and depth.

(3) Truck mixers and truck agitators. Truck mixers used for mixing and hauling concrete and truck agitators used for hauling central-mixed concrete shall conform to the requirements of ASTM C 94.

(4) Nonagitator trucks. Nonagitating hauling equipment shall conform to the requirements of ASTM C 94.

c. Finishing Equipment. The standard method of constructing concrete pavements on FAA projects shall be with an approved slip-form paving equipment designed to spread, consolidate, screed, and float-finish the freshly placed concrete in one complete pass of the machine so a dense and homogeneous pavement is achieved with a minimum of hand finishing. The paver-finisher shall be a heavy duty, self-propelled machine designed specifically for paving and finishing high quality concrete pavements. It shall weigh at least 2200 lbs. per foot of paving lane width and powered by an engine having at least 6.0 horsepower per foot of lane width.

On projects requiring less than 500 square yards of cement concrete pavement or requiring individual placement areas of less than 500 square yards, or irregular areas at locations inaccessible to slip-form paving equipment, cement concrete pavement may be placed with approved placement and finishing equipment utilizing stationary side forms. Hand screeding and float finishing may only be utilized on small irregular areas as allowed by the Engineer.

d. Vibrators. Vibrator shall be the internal type. Operating frequency for internal vibrators shall be between 8,000 and 12,000 vibrations per minute. Average amplitude for internal vibrators shall be 0.025-0.05 inches (0.06-0.13 cm).

The number, spacing, and frequency shall be as necessary to provide a dense and homogeneous pavement and meet the recommendations of ACI 309, Guide for Consolidation of Concrete. Adequate power to operate all vibrators shall be available on the paver. The vibrators shall be automatically controlled so that they shall be stopped as forward motion ceases. The contractor shall provide an electronic or mechanical means to monitor vibrator status. The checks on vibrator status shall occur a minimum of two times per day or when requested by the Engineer.

Hand held vibrators may be used in irregular areas only, but shall meet the recommendations of ACI 309, Guide for Consolidation of Concrete.

e. Concrete Saws. The Contractor shall provide sawing equipment adequate in number of units and power to complete the sawing to the required dimensions. The Contractor shall provide at least one standby saw in good working order and a supply of saw blades at the site of the work at all times during sawing operations.

f. Side Forms. Straight side forms shall be made of steel and shall be furnished in sections not less than 10 feet (3 m) in length. Forms shall have a depth equal to the pavement thickness at the edge, and a base width equal to or greater than the depth. Flexible or curved forms of proper radius shall be used for curves of 100-foot (31 m) radius or less. Forms shall be provided with adequate devices for secure settings so that when in place they will withstand, without visible spring or settlement, the impact and vibration of the consolidating and finishing equipment. Forms with battered top surfaces and bent, twisted or broken forms shall not be used. Built-up forms shall not be used, except as approved by the Engineer. The top face of the form shall not vary from a true plane more than 1/8 inch (3 mm) in 10 feet (3 m), and the upstanding leg shall not vary more than 1/4 inch (6 mm). The forms shall contain provisions for locking the ends of abutting sections together tightly for secure setting. Wood forms may be used under special conditions, when approved by the Engineer.

g. Pavers. The paver shall be fully energized, self-propelled, and designed for the specific purpose of placing, consolidating, and finishing the concrete pavement, true to grade, tolerances, and cross section. It shall be of sufficient weight and power to construct the maximum specified concrete paving lane width as shown in the plans, at adequate forward speed, without transverse, longitudinal or vertical instability or without displacement. The paver shall be equipped with electronic or hydraulic horizontal and vertical control devices.

501-4.2 FORM SETTING. Forms shall be set sufficiently in advance of the concrete placement to insure continuous paving operation. After the forms have been set to correct grade, the underlying surface shall be thoroughly tamped, either mechanically or by hand, at both the inside and outside edges of the base of the forms. Forms shall be staked into place sufficiently to maintain the form in position for the method of placement.

Form sections shall be tightly locked and shall be free from play or movement in any direction. The forms shall not deviate from true line by more than 1/8 inch (3 mm) at any joint. Forms shall be so set that they will withstand, without visible spring or settlement, the impact and vibration of the consolidating and finishing equipment. Forms shall be cleaned and oiled prior to the placing of concrete.

The alignment and grade elevations of the forms shall be checked and corrections made by the Contractor immediately before placing the concrete.

501-4.3 CONDITIONING OF UNDERLYING SURFACE. The compacted underlying surface on which the pavement will be placed shall be widened approximately 3 feet (1 m) to extend beyond the paving machine track to support the paver without any noticeable displacement. After the underlying surface has been placed and compacted to the required density, the areas that will support the paving machine and the area to be paved shall be trimmed or graded to the plan grade elevation and profile by means of a properly designed machine. The grade of the underlying surface shall be controlled by a positive grade control system using lasers, stringlines, or guide wires. If the density of the underlying surface is disturbed by the trimming operations, it shall be corrected by additional compaction and retested at the option of the Engineer before the concrete is placed except when stabilized subbases are being constructed. If damage occurs on a stabilized subbase, it shall be corrected full depth by the Contractor. If traffic is allowed to use the prepared grade, the grade shall be checked and corrected immediately before the placement of concrete. The prepared grade shall be moistened with water, without saturating, immediately ahead of concrete placement to prevent rapid loss of moisture from concrete. The underlying surface shall be protected so that it will be entirely free of frost when concrete is placed.

501-4.4 CONDITIONING OF UNDERLYING SURFACE, SIDE-FORM AND FILL-IN LANE CONSTRUCTION. The prepared underlying surface shall be moistened with water, without saturating, immediately ahead of concrete placement to prevent rapid loss of moisture from the concrete. Damage caused by hauling or usage of other equipment shall be corrected and retested at the option of the Engineers. If damage occurs to a stabilized subbase, it shall be corrected full depth by the Contractor. A template shall be provided and operated on the forms immediately in advance of the placing of all concrete. The template shall be propelled only by hand and not attached to a tractor or other power unit. Templates shall be adjustable so that they may be set and maintained at the correct contour of the underlying surface. The adjustment and operation of the templates shall be such as will provide an accurate retest of the grade before placing the concrete thereon. All excess material shall be removed and wasted. Low areas shall be filled and compacted to a condition similar to that of the surrounding grade. The underlying surface shall be protected so that it will be entirely free from frost when the concrete is placed. The use of chemicals to eliminate frost in the underlying surface shall not be permitted.

The template shall be maintained in accurate adjustment, at all times by the Contractor, and shall be checked daily.

501-4.5 HANDLING, MEASURING, AND BATCHING MATERIAL. The batch plant site, layout, equipment, and provisions for transporting material shall assure a continuous supply of material to the work. Stockpiles shall be constructed in such a manner that prevents segregation and intermixing of deleterious materials.

Aggregates that have become segregated or mixed with earth or foreign material shall not be used. All aggregates produced or handled by hydraulic methods, and washed aggregates, shall be stockpiled or binned for draining at least 12 hours before being batched. Rail shipments requiring more than 12 hours will be accepted as adequate binning only if the car bodies permit free drainage.

Batching plants shall be equipped to proportion aggregates and bulk cement, by weight, automatically using interlocked proportioning devices of an approved type. When bulk cement is used, the Contractor shall use a suitable method of handling the cement from weighing hopper to transporting container or into the batch itself for transportation to the mixer, such as a chute, boot, or other approved device, to prevent loss of cement. The device shall be arranged to provide positive assurance that the cement content specified is present in each batch.

501-4.6 MIXING CONCRETE. The concrete may be mixed at the work site, in a central mix plant or in truck mixers. The mixer shall be of an approved type and capacity. Mixing time shall be measured from the time all materials, except water, are emptied into the drum. All concrete shall be mixed and delivered to the site in accordance with the requirements of ASTM C 94.

Mixed concrete from the central mixing plant shall be transported in truck mixers, truck agitators, or nonagitating trucks. The elapsed time from the addition of cementitious material to the mix until the concrete is deposited in place at the work site shall not exceed 30 minutes when the concrete is hauled in nonagitating trucks, nor 90 minutes when the concrete is hauled in truck mixers or truck agitators. Retempering concrete by adding water or by other means will not be permitted. With transit mixers additional water may be added to the batch materials and additional mixing performed to increase the slump to meet the specified requirements provided the addition of water is performed within 45 minutes after the initial mixing operations and provided the water/cementitious ratio specified in the approved mix design is not exceeded, and approved by the Engineer.

501-4.7 LIMITATIONS ON MIXING AND PLACING. No concrete shall be mixed, placed, or finished when the natural light is insufficient, unless an adequate and approved artificial lighting system is operated.

a. Cold Weather. Unless authorized in writing by the Engineer, mixing and concreting operations shall be discontinued when a descending air temperature in the shade and away from artificial heat reaches 40 degrees F (4 degrees C) and shall not be resumed until an ascending air temperature in the shade and away from artificial heat reaches 35 degrees F (2 degrees C).

The aggregate shall be free of ice, snow, and frozen lumps before entering the mixer. The temperature of the mixed concrete shall not be less than 50 degrees F (10 degrees C) at the time of placement. Concrete shall not be placed on frozen material nor shall frozen aggregates be used in the concrete.

When concreting is authorized during cold weather, water and/or the aggregates may be heated to not more than 150 degrees F (66 degrees C). The apparatus used shall heat the mass uniformly and shall be arranged to preclude the possible occurrence of overheated areas which might be detrimental to the materials.

b. Hot Weather. During periods of hot weather when the maximum daily air temperature exceeds 85 degrees F (30 degrees C), the following precautions shall be taken.

The forms and/or the underlying surface shall be sprinkled with water immediately before placing the concrete. The concrete shall be placed at the coolest temperature practicable, and in no case shall the temperature of the concrete when placed exceed 90 degrees F (35 degrees C). The aggregates and/or mixing water shall be cooled as necessary to maintain the concrete temperature at or not more than the specified maximum.

The finished surfaces of the newly laid pavement shall be kept damp by applying a water-fog or mist with approved spraying equipment until the pavement is covered by the curing medium. If necessary, wind screens shall be provided to protect the concrete from an evaporation rate in excess of 0.2 psf per hour as determined in accordance with Figure 2.1.5 in ACI 305R, Hot Weather Concreting, which takes into consideration relative humidity, wind velocity, and air temperature.

When conditions are such that problems with plastic cracking can be expected, and particularly if any plastic cracking begins to occur, the Contractor shall immediately take such additional measures as necessary to protect the concrete surface. Such measures shall consist of wind screens, more effective fog sprays, and similar measures commencing immediately behind the paver. If these measures are not effective in preventing plastic cracking, paving operations shall be immediately stopped.

c. Temperature Management Program. Prior to the start of paving operation for each day of paving, the contractor shall provide the engineer with a Temperature Management Program for the concrete to be placed to assure that uncontrolled cracking is avoided. As a minimum the program shall address the following items:

(1) Anticipated tensile strains in the fresh concrete as related to heating and cooling of the concrete material.

(2) Anticipated weather conditions such as ambient temperatures, wind velocity, and relative humidity.

(3) Anticipated timing of initial sawing of joint.

501-4.8 PLACING CONCRETE. The Contractor has the option of placing the concrete with either side (fixed) forms or slip-forms. At any point in concrete conveyance, the free vertical drop of the concrete from one point to another or to the underlying surface shall not exceed 3 feet (1 m). Backhoes and Grading equipment shall not be used to distribute the concrete in front of the paver. Front end loaders will not be used unless the contractor demonstrates that they can be used without contaminating the concrete and base course and it is approved by the Engineer.

Hauling equipment or other mechanical equipment can be permitted on adjoining previously constructed pavement when the concrete strength reaches a flexural strength of 550 psi (3,792 kPa) , based on the average of four field cured specimens per 2,000 cubic yards (1 530 cubic meters) of concrete placed. Also, subgrade and subbase planers, concrete pavers, and concrete finishing equipment may be permitted to ride upon the edges of previously constructed pavement when the concrete has attained a minimum flexural strength of 400 psi.

a. Slip-Form Construction. The concrete shall be distributed uniformly into final position by a self propelled slip-form paver without delay. The alignment and elevation of the paver shall be regulated from outside reference lines established for this purpose. The paver shall vibrate the concrete for the full width and depth of the strip of pavement being placed and the vibration shall be adequate to provide a consistency of concrete that will stand normal to the surface with sharp well defined edges. The sliding forms shall be rigidly held together laterally to prevent spreading of the forms.

The plastic concrete shall be effectively consolidated by internal vibration with transverse vibrating units for the full width of the pavement and/or a series of equally placed longitudinal vibrating units. The space from the outer edge of the pavement to longitudinal unit shall not exceed 9 inches. The spacing of internal units shall be uniform and shall not exceed 18 inches.

The term internal vibration means vibrating units located within the specified thickness of pavement section.

The rate of vibration of each vibrating unit shall be within 8000 to 12000 cycles per minute and the amplitude of vibration shall be sufficient to be perceptible on the surface of the concrete along the entire length of the vibrating unit an for a distance of at least one foot. The frequency of vibration or amplitude shall vary proportionately with the rate of travel to result in a uniform density and air content. The paving machine shall be equipped with a tachometer or other suitable device for measuring and indicating the actual frequency of vibrations.

The concrete shall be held at a uniform consistency. The slip-form paver shall be operated with as nearly a continuous forward movement as possible. And all operations of mixing, delivering, and spreading concrete shall be coordinated to provide uniform progress with stopping and starting of the paver held to a minimum. If for any reason, it is necessary to stop the forward movement of the paver, the vibratory and tamping elements shall also be stopped immediately. No tractive force shall be applied to the machine, except that which is controlled from the machine.

When concrete is being placed adjacent to an existing pavement, that part of the equipment which is supported on the existing pavement shall be equipped with protective pads on crawler tracks or rubber-tired wheels on which the bearing surface is offset to run a sufficient distance from the edge of the pavement to avoid breaking the pavement edge.

b. Side-Form Construction. Side form sections shall be straight, free from warps, bends, indentations, or other defects. Defective forms shall be removed from the work. Metal side forms shall be used except at end closures and transverse construction joints where straight forms of other suitable material may be used.

Side forms may be built up by rigidly attaching a section to either top or bottom of forms. If such build-up is attached to the top of metal forms, the build-up shall also be metal.

Width of the base of all forms shall be equal to at least 80 percent of the specified pavement thickness.

Side forms shall be of sufficient rigidity, both in the form and in the interlocking connection with adjoining forms, that springing will not occur under the weight of subgrading and paving equipment or from the pressure of the concrete. The Contractor shall provide sufficient forms so that there will be no delay in placing concrete due to lack of forms.

Before placing side forms, the underlying material shall be at the proper grade. Side forms shall have full bearing upon the foundation throughout their length and width of base and shall be placed to the required grade and alignment of the finished pavement. They shall be firmly supported during the entire operation of placing, compacting, and finishing the pavement.

Forms shall be drilled in advance of being placed to line and grade to accommodate tie bars where these are specified.

Immediately in advance of placing concrete and after all subbase operations are completed, side forms shall be trued and maintained to the required line and grade for a distance sufficient to prevent delay in placing.

Side forms shall remain in place at least 12 hours after the concrete has been placed, and in all cases until the edge of the pavement no longer requires the protection of the forms. Curing compound shall be applied to the concrete immediately after the forms have been removed.

Side forms shall be thoroughly cleaned and oiled each time they are used and before concrete is placed against them.

Concrete shall be spread, screeded, shaped and consolidated by one or more self-propelled machines. These machines shall uniformly distribute and consolidate concrete without segregation so that the completed pavement will conform to the required cross section with a minimum of handwork.

The number and capacity of machines furnished shall be adequate to perform the work required at a rate equal to that of concrete delivery.

Concrete for the full paving width shall be effectively consolidated by internal vibrators without causing segregation. Internal type vibrators' rate of vibration shall be not less than 7,000 cycles per minute. Amplitude of vibration shall be sufficient to be perceptible on the surface of the concrete more than one foot from the vibrating element. The Contractor shall furnish a tachometer or other suitable device for measuring and indicating frequency of vibration.

Power to vibrators shall be connected so that vibration ceases when forward or backward motion of the machine is stopped.

The provisions relating to the frequency and amplitude of internal vibration shall be considered the minimum requirements and are intended to ensure adequate density in the hardened concrete.

c. Consolidation Testing. The provisions relating to the frequency and amplitude of internal vibration shall be considered the minimum requirements and are intended to ensure adequate density in the hardened concrete. If a lack of consolidation of the concrete is suspected by the Engineer, additional referee testing may be required. Referee testing of hardened concrete will be performed by cutting cores from the finished pavement after a minimum of 24 hours curing. Density determinations will be made based on the water content of the core as taken. ASTM C 642 shall be used for the determination of core density in the saturated-surface dry condition. Referee cores will be taken at the minimum rate of one for each 500 cubic yards of pavement, or fraction thereof.

The average density of the cores shall be at least 97 percent of the original mix design density, with no cores having a density of less than 96 percent of the original mix design density.

Failure to meet the above requirements will be considered as evidence that the minimum requirements for vibration are inadequate for the job conditions, and additional vibrating units or other means of increasing the effect of vibration shall be employed so that the density of the hardened concrete as indicated by further referee testing shall conform to the above listed requirements.

501-4.9 STRIKE-OFF OF CONCRETE AND PLACEMENT OF REINFORCEMENT. Following the placing of the concrete, it shall be struck off to conform to the cross section shown on the plans and to an elevation such that when the concrete is properly consolidated and finished, the surface of the pavement shall be at the elevation shown on the plans. When reinforced concrete pavement is placed in two layers, the bottom layer shall be struck off to such length and depth that the sheet of reinforcing steel fabric or bar mat may be laid full length on the concrete in its final position without further manipulation. The reinforcement shall then be placed directly upon the concrete, after which the top layer of the concrete shall be placed, struck off, and screeded. If any portion of the bottom layer of concrete has been placed more than 30 minutes without being covered with the top layer or if initial set has taken place, it shall be removed and replaced with freshly mixed concrete at the Contractor's expense. When reinforced concrete is placed in one layer, the reinforcement may be positioned in advance of concrete placement or it may be placed in plastic concrete by mechanical or vibratory means after spreading.

Reinforcing steel, at the time concrete is placed, shall be free of mud, oil, or other organic matter that may adversely affect or reduce bond. Reinforcing steel with rust, mill scale or a combination of both will be considered satisfactory, provided the minimum dimensions, weight, and tensile properties of a hand wire-brushed test specimen are not less than the applicable ASTM specification requirements.

501-4.10 JOINTS. Joints shall be constructed as shown on the plans and in accordance with these requirements. All joints shall be constructed with their faces perpendicular to the surface of the pavement and finished or edged as shown on the plans. Joints shall not vary more than 1/2 inch (13 mm) from their designated position and shall be true to line with not more than 1/4-inch (6 mm) variation in 10 feet (3 m). The surface across the joints shall be tested with a 10-foot (3 m) straightedge as the joints are finished and any irregularities in excess of 1/4 inch (6 mm) shall be corrected before the concrete has hardened. All joints shall be so prepared, finished, or cut to provide a groove of uniform width and depth as shown on the plans.

a. Construction. Longitudinal construction joints shall be slip-formed or formed against side forms with or without keyways, as shown in the plans.

Transverse construction joints shall be installed at the end of each day's placing operations and at any other points within a paving lane when concrete placement is interrupted for more than 30 minutes or it appears that the concrete will obtain its initial set before fresh concrete arrives. The installation of the joint shall be located at a planned contraction or expansion joint. If placing of the concrete is stopped, the Contractor shall remove the excess concrete back to the previous planned joint.

b. Contraction. Contraction joints shall be installed at the locations and spacing as shown on the plans. Contraction joints shall be installed to the dimensions required by forming a groove or cleft in the top of the slab while the concrete is still plastic or by sawing a groove into the concrete surface after the concrete has hardened. When the groove is formed in plastic concrete the sides of the grooves shall be finished even and smooth with an edging tool. If an insert material is used, the installation and edge finish shall be according to the manufacturer's instructions. The groove shall be finished or cut clean so that spalling will be avoided at intersections with other joints. Grooving or sawing shall produce a slot at least 1/8 inch (3 mm) wide and to the depth shown on the plans.

c. Expansion. Expansion joints shall be installed as shown on the plans. The premolded filler of the thickness as shown on the plans, shall extend for the full depth and width of the slab at the joint, except for space for sealant at the top of the slab. The filler shall be securely staked or fastened into position perpendicular to the proposed finished surface. A cap shall be provided to protect the top edge of the filler and to permit the concrete to be placed and finished. After the concrete has been placed and struck off, the cap shall be carefully withdrawn leaving the space over the premolded filler. The edges of the joint shall be finished and tooled while the concrete is still plastic. Any concrete bridging the joint space shall be removed for the full width and depth of the joint.

d. Keyways. Keyways (only female keys permitted) shall be formed in the plastic concrete by means of side forms or the use of keyway liners that are inserted during the slip-form operations. The keyway shall be formed to a tolerance of 1/4 inch (6 m) in any dimension and shall be of sufficient stiffness to support the upper keyway flange without distortion or slumping of the top of the flange. The dimensions of the keyway forms shall not vary more than plus or minus 1/4 inch (6 mm) from the mid-depth of the pavement. Liners that remain in place permanently

and become part of the keyed joint shall be made of galvanized, copper clad, or of similar rust-resistant material compatible with plastic and hardened concrete and shall not interfere with joint reservoir sawing and sealing.

e. Tie bars. Tie bars shall consist of deformed bars installed in joints as shown on the plans. Tie bars shall be placed at right angles to the centerline of the concrete slab and shall be spaced at intervals shown on the plans. They shall be held in position parallel to the pavement surface and in the middle of the slab depth. When tie bars extend into an unpaved lane, they may be bent against the form at longitudinal construction joints, unless threaded bolt or other assembled tie bars are specified. These bars shall not be painted, greased, or enclosed in sleeves. When slip-form operations call for tie bars, two-piece hook bolts can be installed in the female side of the keyed joint provided the installation is made without distorting the keyed dimensions or causing edge slump. If a bent tie bar installation is used, the tie bars shall be inserted through the keyway liner only on the female side of the joint. In no case shall a bent tie bar installation for male keyways be permitted.

f. Dowel bars. Dowel bars or other load-transfer units of an approved type shall be placed across joints in the manner as shown on the plans. They shall be of the dimensions and spacings as shown and held rigidly in the middle of the slab depth in the proper horizontal and vertical alignment by an approved assembly device to be left permanently in place. The dowel or load-transfer and joint devices shall be rigid enough to permit complete assembly as a unit ready to be lifted and placed into position. A metal, or other type, dowel expansion cap or sleeve shall be furnished for each dowel bar used with expansion joints. These caps shall be substantial enough to prevent collapse and shall be placed on the ends of the dowels as shown on the plans. The caps or sleeves shall fit the dowel bar tightly and the closed end shall be watertight. The portion of each dowel painted with rust preventative paint, as required under paragraph 501-2.7 and shown on the plans to receive a debonding lubricant, shall be thoroughly coated with asphalt MC-70, or an approved lubricant, to prevent the concrete from bonding to that portion of the dowel. If free-sliding plastic-coated or epoxy-coated steel dowels are used, a lubrication bond breaker shall be used except when approved pullout tests indicate it is not necessary. Where butt-type joints with dowels are designated, the exposed end of the dowel shall be oiled.

Dowel bars at contraction joints may be placed in the full thickness of pavement by a mechanical device approved by the Engineer. The device shall be capable of installing dowel bars within the maximum permissible alignment tolerances. Dowels bars at longitudinal construction joints shall be bonded in drilled holes.

g. Installation. All devices used for the installation of expansion joints shall be approved by the Engineer.

The top of an assembled joint device shall be set at the proper distance below the pavement surface and the elevation shall be checked. Such devices shall be set to the required position and line and shall be securely held in place by stakes or other means to the maximum permissible tolerances during the pouring and finishing of the concrete. The premolded joint material shall be placed and held in a vertical position; if constructed in sections, there shall be no offsets between adjacent units.

Dowel bars and assemblies shall be checked for position and alignment. The maximum permissible tolerances on dowel bar alignment shall be in accordance with paragraph 501-5.2e(6). During the concrete placement operation, it is advisable to place plastic concrete directly on dowel assemblies immediately prior to passage of the paver to help maintain dowel position and alignment within maximum permissible tolerances.

When concrete is placed using slip-form pavers, dowels and tie bars shall be placed in longitudinal construction joints by bonding the dowels or tie bars into holes drilled into the hardened concrete. Holes approximately 1/8-inch to 1/4-inch (3 to 6 mm) greater in diameter than the dowel or tie bar shall be drilled with rotary-type core drills that must be held securely in place to drill perpendicularly into the vertical face of the pavement slab. Rotary-type percussion drills may be used provided that spalling of concrete does not occur. Any damage of the concrete shall be repaired by the Contractor in a method approved by the Engineer. Dowels or tie bars shall be bonded in the drilled holes using an epoxy resin material. Installation procedures shall be adequate to insure that the area around dowels is completely filled with epoxy grout. Epoxy shall be injected into the back of the hole and displaced by the insertion of the dowel bar. Bars shall be completely inserted into the hole and shall not be withdrawn and reinserted creating air pockets in the epoxy around the bar. The Contractor shall furnish a template for checking the position and alignment of the dowels. Dowel bars shall not be less than 10 inches (25 cm) from a transverse joint and shall not interfere with dowels in the transverse direction.

h. Sawing of Joints. Joints shall be cut as shown on the plans. Equipment shall be as described in paragraph 501-4.1. The circular cutter shall be capable of cutting a groove in a straight line and shall produce a slot at least 1/8 inch (3 mm) wide and to the depth shown on the plans. The top portion of the slot shall be widened by sawing to provide adequate space for joint sealers as shown on the plans. Sawing shall commence as soon as the concrete has hardened sufficiently to permit cutting without chipping, spalling, or tearing and before uncontrolled shrinkage cracking of the pavement occurs. Sawing shall be carried on both during the day and night as required. The joints shall be sawed at the required spacing, consecutively in sequence of the concrete placement. Curing compound, if being used as the cure type, shall be reapplied in the initial sawcut and maintained for the remaining cure period. Curing compound shall not be applied, and used as the cure method, to any final concrete face that is to receive a sealant. All slurry and debris produced in the sawing of joints shall be removed by vacuuming and washing.

501-4.11 FINAL STRIKE-OFF, CONSOLIDATION, AND FINISHING.

a. Sequence. The sequence of operations shall be the strike-off, floating and removal of laitance, straightedging, and final surface finish. The addition of superficial water to the surface of the concrete to assist in finishing operations will not be permitted.

b. Finishing at Joints. The concrete adjacent to joints shall be compacted or firmly placed without voids or segregation against the joint material; it shall be firmly placed without voids or segregation under and around all load-transfer devices, joint assembly units, and other features designed to extend into the pavement. Concrete adjacent to joints shall be mechanically vibrated as required in paragraph 501-4.8.a. After the concrete has been placed and vibrated adjacent to the joints, the finishing machine shall be operated in a manner to avoid damage or misalignment of joints. If uninterrupted operations of the finishing machine, to, over, and beyond the joints, cause segregation of concrete, damage to, or misalignment of the joints, the finishing machine shall be stopped when the screed is approximately 8 inches (20 cm) from the joint. Segregated concrete shall be removed from the front of and off the joint; and the forward motion of the finishing machine shall be resumed. Thereafter, the finishing machine may be run over the joint without lifting the screed, provided there is no segregated concrete immediately between the joint and the screed or on top of the joint.

c. Machine Finishing. The concrete shall be spread as soon as it is placed, and it shall be struck off and screeded by a finishing machine. The machine shall go over each area as many times and at such intervals as necessary to give to proper consolidation and to leave a surface of uniform texture. Excessive operation over a given area shall be avoided. When side forms are used, the tops of the forms shall be kept clean by an effective device attached to the machine, and the travel of the machine on the forms shall be maintained true without lift, wobbling, or other variation tending to affect the precision finish. During the first pass of the finishing machine, a uniform ridge of concrete shall be maintained ahead of the front screed for its entire length. When in operation, the screed shall be moved forward with a combined longitudinal and transverse shearing motion, always moving in the direction in which the work is progressing, and so manipulated that neither end is raised from the side forms during the striking-off process. If necessary, this shall be repeated until the surface is of uniform texture, true to grade and cross section, and free from porous areas.

d. Hand Finishing. Hand finishing methods will not be permitted, except under the following conditions: in the event of breakdown of the mechanical equipment, hand methods may be used to finish the concrete already deposited on the grade; in areas of narrow widths or of irregular dimensions where operation of the mechanical equipment is impractical. Concrete, as soon as placed, shall be struck off and screeded. An approved portable screed shall be used. A second screed shall be provided for striking off the bottom layer of concrete when reinforcement is used.

The screed for the surface shall be a least 2 feet (0.6 m) longer than the maximum width of the slab to be struck off. It shall be of approved design, sufficiently rigid to retain its shape, and shall be constructed either of metal or of other suitable material covered with metal. Consolidation shall be attained by the use of suitable vibrators.

e. Floating. After the concrete has been struck off and consolidated, it shall be further smoothed and trued by means of a longitudinal float using one of the following methods:

(1) Hand Method. Long-handled floats shall not be less than 12 feet (3.6 m) in length and 6 inches (15 cm) in width, stiffened to prevent flexibility and warping. The float shall be operated from foot bridges spanning but not touching the concrete or from the edge of the pavement. Floating shall pass gradually from one side of the pavement to the other. Forward movement along the centerline of the pavement shall be in successive advances of not more than one-half the length of the float. Any excess water or laitance in excess of 1/8-inch (3 mm) thick shall be removed and wasted.

(2) Mechanical method. The Contractor may use a machine composed of a cutting and smoothing float(s), suspended from and guided by a rigid frame and constantly in contact with, the side forms or underlying surface. If necessary, long-handled floats having blades not less than 5 feet (1.5 m) in length and 6 inches (15 cm) in width may be used to smooth and fill in open-textured areas in the pavement. When the crown of the pavement will not permit the use of the mechanical float, the surface shall be floated transversely by means of a long-handled float. Care shall be taken not to work the crown out of the pavement during the operation. After floating, any excess water and laitance in excess of 1/8-inch (3 mm) thick shall be removed and wasted. Successive drags shall be lapped one-half the length of the blade.

f. Straight-edge Testing and Surface Correction. After the pavement has been struck off and while the concrete is still plastic, it shall be tested for trueness with a Contractor furnished 16-foot (5 m) straightedge swung from handles 3 feet (1 m) longer than one-half the width of the slab. The straightedge shall be held in contact with the surface in successive positions parallel to the centerline and the whole area gone over from one side of the slab to the other, as necessary. Advancing shall be in successive stages of not more than one-half the length of the straightedge. Any excess water and laitance in excess of 1/8-inch (3 mm) thick shall be removed from the surface of the pavement and wasted. Any depressions shall be immediately filled with freshly mixed concrete, struck off, consolidated, and refinished. High areas shall be cut down and refinished. Special attention shall be given to assure that the surface across joints meets the smoothness requirements of paragraph 501-5.2e(3). Straightedge testing and surface corrections shall continue until the entire surface is found to be free from observable departures from the straightedge and until the slab conforms to the required grade and cross section. The use of long-handled wood floats shall be confined to a minimum; they may be used only in emergencies and in areas not accessible to finishing equipment.

501-4.12 SURFACE TEXTURE. The surface of the pavement shall be finished with either a brush or broom, burlap drag, or artificial turf finish for all newly constructed concrete pavements. It is important that the texturing equipment not tear or unduly roughen the pavement surface during the operation. Any imperfections resulting from the texturing operation shall be corrected to the satisfaction of the Engineer.

a. Brush or Broom Finish. If the pavement surface texture is to be a type of brush or broom finish, it shall be applied when the water sheen has practically disappeared. The equipment shall operate transversely across the pavement surface, providing corrugations that are uniform in appearance and approximately 1/16 of an inch (2 mm) in depth.

Not Applicable

b. Burlap Drag Finish. If a burlap drag is used to texture the pavement surface, it shall be at least 15 ounces per square yard (555 grams per square meter). To obtain a textured surface, the transverse threads of the burlap shall be removed approximately 1 foot (0.3 m) from the trailing edge. A heavy buildup of grout on the burlap threads produces the desired wide sweeping longitudinal striations on the pavement surface. The corrugations shall be uniform in appearance and approximately 1/16 of an inch (2 mm) in depth.

c. Artificial Turf Finish. If artificial turf is used to texture the surface, it shall be applied by dragging the surface of the pavement in the direction of concrete placement with an approved full-width drag made with artificial turf. The leading transverse edge of the artificial turf drag will be securely fastened to a lightweight pole on a traveling bridge. At least 2 feet of the artificial turf shall be in contact with the concrete surface during dragging operations. A variety of different types of artificial turf are available and approval of any one type will be done only after it has been demonstrated by the Contractor to provide a satisfactory texture. One type that has provided satisfactory texture consists of 7,200 approximately 0.85-inches-long polyethylene turf blades per square foot. The corrugations shall be uniform in appearance and approximately 1/16 of an inch (2 mm) in depth.

SKID-RESISTANT SURFACESSAW-CUT GROOVING. If shown on the plans, skid resistant surfaces for asphalt pavements shall be provided by construction of saw-cut grooves. Saw-cut grooves must meet the requirements of Item P-621.

501-4.14 CURING. Immediately after finishing operations are completed and marring of the concrete will not occur, the entire surface of the newly placed concrete shall be cured for a 7-day cure period in accordance with one of the methods below. Failure to provide sufficient cover material of whatever kind the Contractor may elect to use, or lack of water to adequately take care of both curing and other requirements, shall be cause for immediate suspension of concreting operations. The concrete shall not be left exposed for more than 1/2 hour during the curing period.

a. Impervious Membrane Method. The entire surface of the pavement shall be sprayed uniformly with white pigmented curing compound immediately after the finishing of the surface and before the set of the concrete has taken place. The curing compound shall not be applied during rainfall. Curing compound shall be applied by mechanical sprayers under pressure at the rate of 1 gallon (4 liters) to not more than 150 square feet (14 square meters). The spraying equipment shall be of the fully atomizing type equipped with a tank agitator. At the time of use, the compound shall be in a thoroughly mixed condition with the pigment uniformly dispersed throughout the vehicle. During application the compound shall be stirred continuously by mechanical means. Hand spraying of odd widths or shapes and concrete surfaces exposed by the removal of forms will be permitted. When hand spraying is approved by the Engineer, a double application rate shall be used to insure coverage. The curing compound shall be of such character that the film will harden within 30 minutes after application. Should the film become damaged from any cause, including sawing operations, within the required curing period, the damaged portions shall be repaired immediately with additional compound or other approved means. Upon removal of side forms, the sides of the exposed slabs shall be protected immediately to provide a curing treatment equal to that provided for the surface.

b. Polyethylene Films. The top surface and sides of the pavement shall be entirely covered with polyethylene sheeting. The units shall be lapped at least 18 inches (457 mm). The sheeting shall be placed and weighted to cause it to remain in contact with the surface and sides. The sheeting shall have dimensions that will extend at least twice the thickness of the pavement beyond the edges of the pavement. Unless otherwise specified, the sheeting shall be maintained in place for 7 days after the concrete has been placed.

c. Waterproof Paper. The top surface and sides of the pavement shall be entirely covered with waterproofed paper. The units shall be lapped at least 18 inches (457 mm). The paper shall be placed and weighted to cause it to remain in contact with the surface covered. The paper shall have dimensions that will extend at least twice the thickness of the pavement beyond the edges of the slab. The surface of the pavement shall be thoroughly saturated prior to placing of the paper. Unless otherwise specified, the paper shall be maintained in place for 7 days after the concrete has been placed.

d. White Burlap-Polyethylene Sheets. The surface of the pavement shall be entirely covered with the sheeting. The sheeting used shall be such length (or width) that it will extend at least twice the thickness of the pavement beyond the edges of the slab. The sheeting shall be placed so that the entire surface and both edges of the slab are completely covered. The sheeting shall be placed and weighted to remain in contact with the surface covered, and the covering shall be maintained fully saturated and in position for 7 days after the concrete has been placed.

(1) Curing in Cold Weather. The concrete shall be maintained at a temperature of at least 50 degrees F (10 degrees C) for a period of 72 hours after placing and at a temperature above freezing for the remainder of the curing time. The Contractor shall be responsible for the quality and strength of the concrete placed during cold weather, and any concrete injured by frost action shall be removed and replaced at the Contractor's expense.

e. Water Method. The entire area shall be covered with burlap or other water absorbing material. The material shall be of sufficient thickness to retain water for adequate curing without excessive runoff. The material

shall be kept wet at all times and maintained for 7 days. When the forms are stripped, the vertical walls shall also be kept moist. It shall be the responsibility of the Contractor to prevent ponding of the curing water on the subbase."

501-4.15 REMOVING FORMS. Unless otherwise specified, forms shall not be removed from freshly placed concrete until it has hardened sufficiently to permit removal without chipping, spalling, or tearing. After the forms have been removed, the sides of the slab shall be cured as outlined in one of the methods indicated in paragraph 501-4.14. Major honeycombed areas shall be considered as defective work and shall be removed and replaced in accordance with paragraph 501-5.2(f).

501-4.16 SEALING JOINTS. The joints in the pavement shall be sealed in accordance with Item P-605.

501-4.17 PROTECTION OF PAVEMENT. The Contractor shall protect the pavement and its appurtenances against both public traffic and traffic caused by the Contractor's employees and agents. This shall include watchmen to direct traffic and the erection and maintenance of warning signs, lights, pavement bridges, crossovers, and protection of unsealed joints from intrusion of foreign material, etc. Any damage to the pavement occurring prior to final acceptance shall be repaired or the pavement replaced at the Contractor's expense. The Contractor shall have available at all times, materials for the protection of the edges and surface of the unhardened concrete. Such protective materials shall consist of rolled polyethylene sheeting at least 4 mils (0.1 mm) thick of sufficient length and width to cover the plastic concrete slab and any edges. The sheeting may be mounted on either the paver or a separate movable bridge from which it can be unrolled without dragging over the plastic concrete surface. When rain appears imminent, all paving operations shall stop and all available personnel shall begin covering the surface of the unhardened concrete with the protective covering.

501-4.18 OPENING TO TRAFFIC. The pavement shall not be opened to traffic until test specimens molded and cured in accordance with ASTM C 31 have attained a flexural strength of 550 pounds per square inch (3,792 kPa) when tested in accordance with ASTM C 78. If such tests are not conducted, the pavement shall not be opened to traffic until 14 days after the concrete was placed. Prior to opening the pavement to construction traffic, all joints shall either be sealed or protected from damage to the joint edge and intrusion of foreign materials into the joint. As a minimum, backer rod or tape may be used to protect the joints from foreign matter intrusion. The pavement shall be cleaned before opening for normal operations.

501-4.19 REPAIR, REMOVAL, REPLACEMENT OF SLABS.

a. **General.** New pavement slabs that are broken or contain cracks shall be removed and replaced or repaired, as specified hereinafter at no cost to the owner. Spalls along joints shall be repaired as specified. Removal of partial slabs is not permitted. Removal and replacement shall be full depth, shall be full width of the slab, and the limit of removal shall be normal to the paving lane and to each original transverse joint. The engineer will determine whether cracks extend full depth of the pavement and may require cores to be drilled on the crack to determine depth of cracking. Such cores shall be 4-inch (100 mm) diameter, shall be drilled by the Contractor and shall be filled by the Contractor with a well consolidated concrete mixture bonded to the walls of the hole with epoxy resin, using approved procedures. Drilling of cores and refilling holes shall be at no expense to the owner. All epoxy resin used in this work shall conform to ASTM C 881, Type V.

b. **Shrinkage Cracks.** Shrinkage cracks, which do not exceed 4 inches in depth, shall be cleaned and then pressure injected with epoxy resin, Type IV, Grade 1, using procedures as approved. Care shall be taken to assure that the crack is not widened during epoxy resin injection. All epoxy resin injection shall take place in the presence of the Engineer. Shrinkage cracks, which exceed 4 inches in depth, shall be treated as full depth cracks in accordance with paragraphs 4.19b and 4.19c.

c. **Slabs With Cracks through Interior Areas.** Interior area is defined as that area more than 6 inches (600 mm) from either adjacent original transverse joint. The full slab shall be removed and replaced at no cost to the owner, when there are any full depth cracks, or cracks greater than 4" in depth, that extend into the interior area.

d. **Cracks Close To and Parallel To Joints.** All cracks essentially parallel to original joints, extending full depth of the slab, and lying wholly within 6 inches either side of the joint shall be treated as specified hereinafter.

Any crack extending more than 6 inches (600 mm) from the joint shall be treated as specified above in subparagraph "Slabs With Cracks Through Interior Area."

(1) Full Depth Cracks Present, Original Joint Not Opened. When the original uncracked joint has not opened, the crack shall be sawed and sealed, and the original joint filled with epoxy resin as specified below. The crack shall be sawed with equipment specially designed to follow random cracks. The reservoir for joint sealant in the crack shall be formed by sawing to a depth of 3/4 inch (19 mm), plus or minus 1/16 inch (1.6 mm), and to a width of 5/8 inch (16 mm), plus or minus 1/8 inch (3.2 mm). Any equipment or procedure which causes raveling or spalling along the crack shall be modified or replaced to prevent such raveling or spalling. The joint sealant shall be a liquid sealant as specified. Installation of joint seal shall be as specified for sealing joints or as directed. If the joint sealant reservoir has been sawed out, the reservoir and as much of the lower saw cut as possible shall be filled with epoxy resin, Type IV, Grade 2, thoroughly tooled into the void using approved procedures. If only the original narrow saw cut has been made, it shall be cleaned and pressure injected with epoxy resin, Type IV, Grade 1, using approved procedures. If filler type material has been used to form a weakened plane in the transverse joint, it shall be completely sawed out and the saw cut pressure injected with epoxy resin, Type IV, Grade 1, using approved procedures. Where a parallel crack goes part way across paving lane and then intersects and follows the original joint which is cracked only for the remained of the width, it shall be treated as specified above for a parallel crack, and the cracked original joint shall be prepared and sealed as originally designed.

(2) Full Depth Cracks Present, Original Joint Also Cracked. At a joint, if there is any place in the lane width where a parallel crack and a cracked portion of the original joint overlap, the entire slab containing the crack shall be removed and replaced for the full lane width and length.

e. Removal and Replacement of Full Slabs. Where it is necessary to remove full slabs, unless there are keys or dowels present, all edges of the slab shall be cut full depth with a concrete saw. All saw cuts shall be perpendicular to the slab surface. If keys, dowels, or tie bars are present along any edges, these edges shall be sawed full depth 24 inches (150 mm) from the edge if only keys are present, or just beyond the end of the dowels or tie bars if they are present. These joints shall then be carefully sawed on the joint line to within 1 inch (25 mm) of the depth of the dowel or key.

The main slab shall be further divided by sawing full depth, at appropriate locations, and each piece lifted out and removed. Suitable equipment shall be used to provide a truly vertical lift, and approved safe lifting devices used for attachment to the slabs. The narrow strips along keyed or doweled edges shall be carefully broken up and removed using light, hand-held jackhammers, 30 LB (14 kg) or less, or other approved similar equipment.

Care shall be taken to prevent damage to the dowels, tie bars, or keys or to concrete to remain in place. The joint face below keys or dowels shall be suitably trimmed so that there is not abrupt offset in any direction greater than 1/2 inch (12 mm) and no gradual offset greater than 1 inch (25 mm) when tested in a horizontal direction with a 12-foot (3.6 m) straightedge.

No mechanical impact breakers, other than the above hand-held equipment shall be used for any removal of slabs. If underbreak between 1-1/2 and 4 inches (37 and 100 mm) deep occurs at any point along any edge, the area shall be repaired as directed before replacing the removed slab. Procedures directed will be similar to those specified for surface spalls, modified as necessary.

If underbreak over 4 inches (100 mm) deep occurs, the entire slab containing the underbreak shall be removed and replaced. Where there are no dowels, tie bars, or keys on an edge, or where they have been damaged, dowels of the size and spacing as specified for other joints in similar pavement shall be installed by epoxy grouting them into holes drilled into the existing concrete using procedures as specified. Original damaged dowels or tie bars shall be cut off flush with the joint face. Protruding portions of dowels shall be painted and lightly oiled. All 4 edges of the new slab shall thus contain dowels or original keys or original tie bars.

Placement of concrete shall be as specified for original construction. Prior to placement of new concrete, the underlying material (unless it is stabilized) shall be re-compacted and shaped as specified in the appropriate SECTION of these specifications. The surfaces of all four joint faces shall be cleaned of all loose material and contaminants and coated with a double application of membrane forming curing compound as bond breaker. Care

shall be taken to prevent any curing compound from contacting dowels or tie bars. The resulting joints around the new slab shall be prepared and sealed as specified for original construction.

f. Repairing Spalls Along Joints. Where directed, spalls along joints of new slabs, and along parallel cracks used as replacement joints, shall be repaired by first making a vertical saw cut at least 1 inch (25 mm) outside the spalled area and to a depth of at least 2 inches (50 mm). Saw cuts shall be straight lines forming rectangular areas. The concrete between the saw cut and the joint, or crack, shall be chipped out to remove all unsound concrete and at least 1/2 inch (12 mm) of visually sound concrete. The cavity thus formed shall be thoroughly cleaned with high-pressure water jets supplemented with compressed air to remove all loose material. Immediately before filling the cavity, a prime coat of epoxy resin, Type III, Grade I, shall be applied to the dry cleaned surface of all sides and bottom of the cavity, except any joint face. The prime coat shall be applied in a thin coating and scrubbed into the surface with a stiff-bristle brush. Pooling of epoxy resin shall be avoided. The cavity shall be filled with low slump Portland cement concrete or mortar or with epoxy resin concrete or mortar. Concrete shall be used for larger spalls, generally those more than 1/2 cu. ft. (0.014 m3) in size, and mortar SHALL BE USED FOR THE SMALLER ONES. ANY SPALL LESS THAN 0.1 CU. FT. (O.OO3 m3) shall be repaired only with epoxy resin mortar or a Grade III epoxy resin. Portland cement concrete and mortar mixtures shall be proportioned as directed and shall be mixed, placed, consolidated, and cured as directed. Epoxy resin mortars shall be made with Type III, Grade 1, epoxy resin, using proportions and mixing and placing procedures as recommended by the manufacturer and approved by the Engineer. The epoxy resin materials shall be placed in the cavity in layers not over 2 inches (50 mm) thick. The time interval between placement of additional layers shall be such that the temperature of the epoxy resin material does not exceed 140oF (60oC) at any time during hardening. Mechanical vibrators and hand tampers shall be used to consolidate the concrete or mortar. Any repair material on the surrounding surfaces of the existing concrete shall be removed before it hardens. Where the spalled area abuts a joint, an insert or other bond-breaking medium shall be used to prevent bond at the joint face. A reservoir for the joint sealant shall be sawed to the dimensions required for other joints, or as required to be routed for cracks. The reservoir shall be thoroughly cleaned and sealed with the sealer specified for the joints. If any spall penetrates half the depth of the slab or more, the entire slab shall be removed and replaced as previously specified.

501-4.20 EXISTING CONCRETE PAVEMENT REMOVAL AND REPAIR.

All operations shall be carefully controlled to prevent damage to the concrete pavement and to the underlying material to remain in place. All saw cuts shall be made perpendicular to the slab surface.

a. Removal of Existing Pavement Slab. Not applicable.
unable to produce such a joint face, or if underbreak or other distress occurs, the Contractor shall saw the dowels or keys flush with the joint. The Contractor shall then install new dowels, of the size and spacing used for other similar joints, by epoxy resin bonding them in holes drilled in the joint face as specified in paragraph "Placing dowels and Tie-bars. All this shall be at no additional cost to the Owner.] [Dowels of the size and spacing indicated shall be installed as shown on the drawings by epoxy resin bonding them in holes drilled in the joint face as specified in paragraph "Placing Dowels and Tie Bars".] The joint face shall be sawed or otherwise trimmed so that there is no abrupt offset in any direction greater than 1/2-inch (12 mm) and no gradual offset greater than 1 inch (25 mm) when tested in a horizontal direction with a 12 ft. (3.6 m) straightedge.

b. Edge Repair. Not Applicable

MATERIAL ACCEPTANCE

501-5.1 ACCEPTANCE SAMPLING AND TESTING. All acceptance sampling and testing, with the exception of coring for thickness determination, necessary to determine conformance with the requirements specified in this section will be performed by the Engineer. Concrete shall be accepted for strength and thickness on a lot basis.

A lot shall consist of:

A day's production not to exceed 300 square yards.

Testing organizations performing these tests shall meet the requirements of ASTM C 1077, including accreditation. The accreditation will include ASTM C 78. The Contractor shall bear the cost of providing curing facilities for the strength specimens, per paragraph 501-5.1a(3), and coring and filling operations, per paragraph 501-5.1b(1).

a. Flexural Strength.

(1) Sampling. Each lot shall be divided into four equal sublots. One sample shall be taken for each sublot from the plastic concrete delivered to the job site. Sampling locations shall be determined by the Engineer in accordance with random sampling procedures contained in ASTM D 3665. The concrete shall be sampled in accordance with ASTM C 172.

(2) Testing. Two (2) specimens shall be made from each sample. Specimens shall be made in accordance with ASTM C 31 and the flexural strength of each specimen shall be determined in accordance with ASTM C 78. The flexural strength for each sublot shall be computed by averaging the results of the two test specimens representing that sublot.

Immediately prior to testing for flexural strength, the beam shall be weighed and measured for determination of a sample unit weight. Measurements shall be made for each dimension; height, depth, and length, at the mid-point of the specimen and reported to the nearest tenth of an inch. The weight of the specimen shall be reported to the nearest 0.1 pound. The sample unit weight shall be calculated by dividing the sample weight by the calculated volume of the sample. This information shall be reported as companion information to the measured flexural strength for each specimen.

The samples will be transported while in the molds. The curing, except for the initial cure period, will be accomplished using the immersion in saturated lime water method.

Slump, air content, and temperature tests will also be conducted by the quality assurance laboratory for each set of strength test samples, per ASTM C 31.

(3) Curing. The Contractor shall provide adequate facilities for the initial curing of beams. During the 24 hours after molding, the temperature immediately adjacent to the specimens must be maintained in the range of 60 to 80 degrees F (16 to 27 degrees C), and loss of moisture from the specimens must be prevented. The specimens may be stored in tightly constructed wooden boxes, damp sand pits, temporary buildings at construction sites, under wet burlap in favorable weather, or in heavyweight closed plastic bags, or using other suitable methods, provided the temperature and moisture loss requirements are met.

(4) Acceptance. Acceptance of pavement for flexural strength will be determined by the Engineer in accordance with paragraph 501-5.2b.

b. Pavement Thickness.

(1) Sampling. Each lot shall be divided into four equal sublots and one core shall be taken by the Contractor for each sublot. Sampling locations shall be determined by the Engineer in accordance with random sampling procedures contained in ASTM D 3665. Areas, such as thickened edges, with planned variable thickness, shall be excluded from sample locations.

Cores shall be neatly cut with a core drill. The Contractor shall furnish all tools, labor, and materials for cutting samples and filling the cored hole. Core holes shall be filled by the Contractor with a non-shrink grout approved by the Engineer within one day after sampling.

(2) Testing. The thickness of the cores shall be determined by the Engineer by the average caliper measurement in accordance with ASTM C 174.

(3) Acceptance. Acceptance of pavement for thickness shall be determined by the Engineer in accordance with paragraph 501-5.2c.

c. Partial Lots. When operational conditions cause a lot to be terminated before the specified number of tests have been made for the lot, or when the Contractor and Engineer agree in writing to allow overages or minor placements to be considered as partial lots, the following procedure will be used to adjust the lot size and the number of tests for the lot.

Where three sublots have been produced, they shall constitute a lot. Where one or two sublots have been produced, they shall be incorporated into the next lot or the previous lot and the total number of sublots shall be used in the acceptance criteria calculation, i.e., n=5 or n=6.

d. Outliers. All individual flexural strength tests within a lot shall be checked for an outlier (test criterion) in accordance with ASTM E 178, at a significance level of 5 percent. Outliers shall be discarded, and the PWL shall be determined using the remaining test values.

501-5.2 ACCEPTANCE CRITERIA.

a. General. Acceptance will be based on the following characteristics of the completed pavement:

(1) Flexural strength
(2) Thickness
(3) Smoothness
(4) Grade
(5) Edge slump
(6) Dowel bar alignment

Flexural strength and thickness shall be evaluated for acceptance on a lot basis using the method of estimating percentage of material within specification limits (PWL). Acceptance using PWL considers the variability (standard deviation) of the material and the testing procedures, as well as the average (mean) value of the test results to calculate the percentage of material that is above the lower specification tolerance limit (L).

Acceptance for flexural strength will be based on the criteria contained in accordance with paragraph 501-5.2e(1). Acceptance for thickness will be based on the criteria contained in paragraph 501-5.2e(2). Acceptance for smoothness will be based on the criteria contained in paragraph 501-5.2e(3). Acceptance for grade will be based on the criteria contained in paragraph 501-5.2e(4).

The Engineer may at any time, not withstanding previous plant acceptance, reject and require the Contractor to dispose of any batch of concrete mixture which is rendered unfit for use due to contamination, segregation, or improper slump. Such rejection may be based on only visual inspection. In the event of such rejection, the Contractor may take a representative sample of the rejected material in the presence of the Engineer, and if it can be demonstrated in the laboratory, in the presence of the Engineer, that such material was erroneously rejected, payment will be made for the material at the contract unit price.

b. Flexural Strength. Acceptance of each lot of in-place pavement for flexural strength shall be based on PWL. The Contractor shall target production quality to achieve 90 PWL or higher.

c. Pavement Thickness. Acceptance of each lot of in-place pavement shall be based on PWL. The Contractor shall target production quality to achieve 90 PWL or higher.

d. Percentage of Material Within Limits (PWL). The percentage of material within limits (PWL) shall be determined in accordance with procedures specified in Section 110 of the General Provisions.

The lower specification tolerance limit (L) for flexural strength and thickness shall be:

Lower Specification Tolerance Limit (L)

Flexural Strength	0.93 × strength specified in paragraph 501-3.1
Thickness	Lot Plan Thickness in inches – 0.50 inches

e. Acceptance Criteria.

(1) Flexural Strength. If the PWL of the lot equals or exceeds 90 percent, the lot shall be acceptable. Acceptance and payment for the lot shall be determined in accordance with paragraph 501-8.1.

(2) Thickness. If the PWL of the lot equals or exceeds 90 percent, the lot shall be acceptable. Acceptance and payment for the lot shall be determined in accordance with paragraph 501-8.1.

(3) Smoothness. As soon as the concrete has hardened sufficiently, the pavement surface shall be tested with a 16-foot (5 m) straightedge or other specified device. Surface smoothness deviations shall not exceed 1/4 inch (6 mm) from a 16-foot (5 m) straightedge placed in any direction, including placement along and spanning any pavement joint edge.

Areas in a slab showing high spots of more than 1/4 inch (6 mm) but not exceeding 1/2 inch (13 mm) in 16 feet (5 m) shall be marked and immediately ground down with an approved grinding machine to an elevation that will fall within the tolerance of 1/4 inch (6 mm) or less. Where the departure from correct cross section exceeds 1/2 inch (13 mm), the pavement shall be removed and replaced at the expense of the Contractor when so directed by the Engineer.

(4) Grade. An evaluation of the surface grade shall be made by the Engineer for compliance to the tolerances contained below. Records shall be maintained showing all grade measurements.

Lateral Deviation. Lateral deviation from established alignment of the pavement edge shall not exceed plus or minus 0.10 foot (30 mm) in any lane.

Vertical Deviation. Vertical deviation from established grade shall not exceed plus or minus 0.04 foot (12 mm) at any point.

(5) Edge Slump. When slip-form paving is used, not more than 15 percent of the total free edge of each 500 foot (150 m) segment of pavement, or fraction thereof, shall have an edge slump exceeding 1/4-inch (6 mm), and none of the free edge of the pavement shall have an edge slump exceeding 3/8-inch (10 mm). (The total free edge of 500 feet (150 m) of pavement will be considered the cumulative total linear measurement of pavement edge originally constructed as nonadjacent to any existing pavement; i.e., 500 feet (150 m) of paving lane originally constructed as a separate lane will have 1,000 feet (300 m) of free edge, 500 feet (150 m) of fill-in lane will have no free edge, etc.). The area affected by the downward movement of the concrete along the pavement edge shall be limited to not more than 18 inches (457 mm) from the edge. When excessive edge slump cannot be corrected before the concrete has hardened, the area with excessive edge slump shall be removed and replaced at the expense of the Contractor when so directed by the Engineer.

(6) Dowel Bar Alignment. Dowel bars and assemblies shall be checked for position and alignment. The maximum permissible tolerance on dowel bar alignment in each plane, horizontal and vertical, shall not exceed 2 percent or 1/4 inch per foot (20 mm per meter) of a dowel bar. Vertical alignment of dowels shall be measured parallel to the designed top surface of the pavement, except for those across the crown or other grade change joints. Dowels across crowns and other joints at grade changes, shall be measured to a level surface. Horizontal alignment shall be checked perpendicular to the joint edge.

f. Removal and Replacement of Concrete. Any area or section of concrete that is removed and replaced shall be removed and replaced back to planned joints. The Contractor shall replace damaged dowels and the requirements for doweled longitudinal construction joints in paragraph 501-4.10 shall apply to all contraction joints exposed by concrete removal. Removal and replacement shall be in accordance with paragraph 501-4.19 of this specification.

CONTRACTOR QUALITY CONTROL

501-6.1 QUALITY CONTROL PROGRAM. The Contractor shall develop a Quality Control Program in accordance with Section 100 of the General Provisions. The program shall address all elements that effect the quality of the pavement including but not limited to:

a. Mix Design	**e.** Proportioning	**i.** Dowel Placement and Alignment
b. Aggregate Gradation	**f.** Mixing and Transportation	**j.** Flexural or Compressive Strength
c. Quality of Materials	**g.** Placing and Consolidation	**k.** Finishing and Curing
d. Stockpile Management	**h.** Joints	**l.** Surface Smoothness

501-6.2 QUALITY CONTROL TESTING. The Contractor shall perform all quality control tests necessary to control the production and construction processes applicable to this specification and as set forth in the Quality Control Program. The testing program shall include, but not necessarily be limited to, tests for aggregate gradation, aggregate moisture content, slump, and air content.

A Quality Control Testing Plan shall be developed as part of the Quality Control Program.

a. Fine Aggregate.

(1) Gradation. A sieve analysis shall be made at least twice daily in accordance with ASTM C 136 from randomly sampled material taken from the discharge gate of storage bins or from the conveyor belt.

(2) Moisture Content. If an electric moisture meter is used, at least two direct measurements of moisture content shall be made per week to check the calibration. If direct measurements are made in lieu of using an electric meter, two tests shall be made per day. Tests shall be made in accordance with ASTM C 70 or ASTM C 566.

b. Coarse Aggregate.

(1) Gradation. A sieve analysis shall be made at least twice daily for each size of aggregate. Tests shall be made in accordance with ASTM C 136 from randomly sampled material taken from the discharge gate of storage bins or from the conveyor belt.

(2) Moisture Content. If an electric moisture meter is used, at least two direct measurements of moisture content shall be made per week to check the calibration. If direct measurements are made in lieu of using an electric meter, two tests shall be made per day. Tests shall be made in accordance with ASTM C 566.

c. Slump. Four slump tests shall be performed for each lot of material produced in accordance with the lot size defined in Section 501-5.1. One test shall be made for each sublot. Slump tests shall be performed in accordance with ASTM C 143 from material randomly sampled from material discharged from trucks at the paving site. Material samples shall be taken in accordance with ASTM C 172.

d. Air Content. Four air content tests, shall be performed for each lot of material produced in accordance with the lot size defined in Section 501-5.1. One test shall be made for each sublot. Air content tests shall be performed in accordance with ASTM C 231 for gravel and stone coarse aggregate and ASTM C 173 for slag or other porous coarse aggregate, from material randomly sampled from trucks at the paving site. Material samples shall be taken in accordance with ASTM C 172.

e. Four unit weight and yield tests shall be made in accordance with ASTM C 138. The samples shall be taken in accordance with ASTM C 172 and at the same time as the air content tests.

501-6.3 CONTROL CHARTS. The Contractor shall maintain linear control charts for fine and coarse aggregate gradation, slump, and air content.

Control charts shall be posted in a location satisfactory to the Engineer and shall be kept up to date at all times. As a minimum, the control charts shall identify the project number, the contract item number, the test number, each test parameter, the Action and suspension Limits, or Specification limits, applicable to each test parameter, and the Contractor's test results. The Contractor shall use the control charts as part of a process control system for identifying potential problems and assignable causes before they occur. If the Contractor's projected data during production indicates a potential problem and the Contractor is not taking satisfactory corrective action, the Engineer may halt production or acceptance of the material.

a. Fine and Coarse Aggregate Gradation. The Contractor shall record the running average of the last five gradation tests for each control sieve on linear control charts. Specification limits contained in Tables 1 and 2 shall be superimposed on the Control Chart for job control.

b. Slump and Air Content. The Contractor shall maintain linear control charts both for individual measurements and range (i.e. difference between highest and lowest measurements) for slump and air content in accordance with the following Action and Suspension Limits.

CONTROL CHART LIMITS			
Control Parameter	Individual Measurements		Range Suspension Limit
	Action Limit	Suspension Limit	
Slip Form:			
Slump	+0 to -1 inch (0-25mm)	+0.5 to -1.5 inch (13-38mm)	+/- 1.5 inch (38 mm)
Air Content	+/- 1.2%	+/- 1.8%	+/- 2.5%
Fixed Form			
Slump	+ 0.5 to -1 inch (13-25mm)	+1 to -1.5 inch (25-38mm)	+/- 1.5 inch (38mm)
Air Content	+/- 1.2%	+/- 1.8%	+/- 2.5%

The individual measurement control charts shall use the mix design target values as indicators of central tendency.

501-6.4 CORRECTIVE ACTION. The Contractor Quality Control Program shall indicate that appropriate action shall be taken when the process is believed to be out of control. The Contractor Quality Control Program shall detail what action will be taken to bring the process into control and shall contain sets of rules to gauge when a process is out of control. As a minimum, a process shall be deemed out of control and corrective action taken if any one of the following conditions exists.

a. Fine and Coarse Aggregate Gradation. When two consecutive averages of five tests are outside of the Tables 1 or 2 specification limits, immediate steps, including a halt to production, shall be taken to correct the grading.

b. Fine and Coarse Aggregate Moisture Content. Whenever the moisture content of the fine or coarse aggregate changes by more than 0.5 percent, the scale settings for the aggregate batcher(s) and water batcher shall be adjusted.

c. Slump. The Contractor shall halt production and make appropriate adjustments whenever:

(1) one point falls outside the Suspension Limit line for individual measurements or range; or
(2) two points in a row fall outside the Action Limit line for individual measurements.

d. Air Content. The Contractor shall halt production and adjust the amount of air-entraining admixture whenever:

(1) one point falls outside the Suspension Limit line for individual measurements or range; or

(2) two points in a row fall outside the Action Limit line for individual measurements.

Whenever a point falls outside the Action Limits line, the air-entraining admixture dispenser shall be calibrated to ensure that it is operating correctly and with good reproducibility.

METHOD OF MEASUREMENT

501-8.1 PAYMENT. Payment for accepted concrete pavement shall be made at the contract unit price adjusted in accordance with paragraph 501-8.1a, subject to the limitation that:

The total project payment for concrete pavement shall not exceed 100 percent of the product of the contract unit price and the total number of concrete pavement used in the accepted work (See Note 2 under Table 3).

Payment shall be full compensation for all labor, materials, tools, equipment, and incidentals required to complete the work as specified herein and on the drawings.

a. Basis of Adjusted Payment. The pay factor for each individual lot shall be calculated in accordance with Table 3. A pay factor shall be calculated for both flexural strength and thickness. The lot pay factor shall be the higher of the two values when calculations for both flexural strength and thickness are 100 percent or higher. The lot pay factor shall be the product of the two values when only one of the calculations for either flexural strength or thickness is 100 percent or higher. The lot pay factor shall be the lower of the two values when calculations for both flexural strength and thickness are less than 100 percent .

TABLE 3. PRICE ADJUSTMENT SCHEDULE [1]

Percentage of Material Within Specification Limits (PWL)	Lot Pay Factor (Percent of Contract Unit Price)
96 – 100	106
90 – 95	PWL + 10
75 – 90	0.5PWL + 55
55 – 74	1.4PWL – 12
Below 55	Reject [2]

[1] ALTHOUGH IT IS THEORETICALLY POSSIBLE TO ACHIEVE A PAY FACTOR OF 106 PERCENT FOR EACH LOT, ACTUAL PAYMENT IN EXCESS OF 100 PERCENT SHALL BE SUBJECT TO THE TOTAL PROJECT PAYMENT LIMITATION SPECIFIED IN PARAGRAPH 501-8.1.

[2] The lot shall be removed and replaced. However, the Engineer may decide to allow the rejected lot to remain. In that case, if the Engineer and Contractor agree in writing that the lot shall not be removed, it shall be paid for at 50 percent of the contract unit price AND THE TOTAL PROJECT PAYMENT LIMITATION SHALL BE REDUCED BY THE AMOUNT WITHHELD FOR THE REJECTED LOT.

For each lot accepted, the adjusted contract unit price shall be the product of the lot pay factor for the lot and the contract unit price. Payment shall be subject to the total project payment limitation specified in paragraph 501-8.1. Payment in excess of 100 percent for accepted lots of concrete pavement shall be used to offset payment for accepted lots of concrete pavement that achieve a lot pay factor less than 100 percent.

b. Payment. Payment shall be made under:

Item P-501 Portland Cement Concrete Pavement – 7" Thick—per square yard.

c. Basis of adjusted payment for Smoothness. Price adjustment for pavement smoothness will apply to the total area of concrete within a section of pavement and shall be applied in accordance the following equation and schedule:

(Sq yds in section) x (original unit price per sq yds) x PFm =
= reduction in payment for area within section

Average Profile Index (Inches per mile) pavement strength rating			Contract Unit Price Adjustment PFm
over 30,000 lb	30,000 lb or less	Short Sections	
0 - 7	0 - 10	0 - 15	0.00
7.1 - 9	10.1 - 11	15.1 - 16	0.02
9.1 - 11	11.1 - 12	16.1 - 17	0.04
11.1 - 13	12.1 - 13	17.1 - 18	0.06
13.1 - 14	13.1 - 14	18.1 - 20	0.08
14.1 - 15	14.1 - 15	20.1 - 22	0.10
15.1 & up	15.1 & up	22.1 & up	corrective work required

TESTING REQUIREMENTS

ASTM C 31	Making and Curing Concrete Test Specimens in the Field
ASTM C 39	Compressive Strength of Cylindrical Concrete Specimens
ASTM C 70	Surface Moisture in Fine Aggregate
ASTM C 78	Test for Flexural Strength of Concrete (Using Simple Beam with Third-Point Loading)
ASTM C 88	Test for Soundness of Aggregates by Use of Sodium Sulfate or Magnesium Sulfate
ASTM C 131	Test for Resistance to Abrasion of Small Size Coarse Aggregate by Use of the Los Angeles Machine
ASTM C 136	Sieve Analysis of Fine and Coarse Aggregates
ASTM C 138	Test for Density (Unit Weight), Yield, and Air Content (Gravimetric) of Concrete
ASTM C 143	Test for Slump of Hydraulic Cement Concrete
ASTM C 172	Sampling Freshly Mixed Concrete
ASTM C 173	Test for Air Content of Freshly Mixed Concrete by the Volumetric Method
ASTM C 174	Measuring Thickness of Concrete Elements Using Drilled Concrete Cores
ASTM C 227	Potential Alkali Reactivity of Cement-Aggregate Combinations (Mortar-Bar Method)
ASTM C 231	Test for Air Content of Freshly Mixed Concrete by the Pressure Method
ASTM C 289	Potential Alkali-Silica Reactivity of Aggregates (Chemical Method)
ASTM C 295	Petrographic Examination of Aggregates for Concrete
ASTM C 114	Chemical Analysis of Hydraulic Cement
ASTM C 535	Test for Resistance to Degradation of Large-Size Coarse Aggregate by Abrasion and Impact in the Los Angeles Machine

ASTM C 566	Total Evaporable Moisture Content of Aggregates by Drying
ASTM C 642	Test for Density, Absorption, and Voids in Hardened Concrete
ASTM C 666	Resistance of Concrete to Rapid Freezing and Thawing
ASTM C 1077	Standard Practice for Laboratories Testing Concrete and Concrete Aggregates for Use in Construction And Criteria for Laboratory Evaluation
ASTM C 1260	Potential Alkali Reactivity of Aggregates (Mortar-Bar Method)
ASTM D 3665	Random Sampling of Paving Materials
ASTM D 4791	Test Method for Flat or Elongated Particles in Coarse Aggregate
ASTM E 178	Dealing With Outlying Observations
ASTM E 1274	Test for Measuring Pavement Roughness Using a Profilograph
AASHTO T 26	Quality of Water to be Used in Concrete

MATERIAL REQUIREMENTS

ASTM A 184	Specification for Fabricated Deformed Steel Bar Mats for Concrete Reinforcement
ASTM A 185	Specification for Steel Welded Wire Fabric, Plain, for Concrete Reinforcement
ASTM A 497	Specification for Steel Welded Wire Fabric, Deformed, for Concrete Reinforcement
ASTM A 615	Specification for Deformed and Plain Billet-Steel Bars for Concrete Reinforcement
ASTM A 704	Specification for Welded Steel Plain Bar or Rod Mats for Concrete Reinforcement
ASTM A 714	Specification for High-Strength Low-Alloy Welded and Seamless Steel Pipe
ASTM A 996	Specification for Rail-Steel and Axle Steel Deformed Bars for Concrete Reinforcement
ASTM C 33	Specification for Concrete Aggregates
ASTM C 94	Specification for Ready-Mixed Concrete
ASTM C 150	Specification for Portland Cement
ASTM C 171	Specification for Sheet Materials for Curing Concrete
ASTM C 260	Specification for Air-Entraining Admixtures for Concrete
ASTM C 309	Specification for Liquid Membrane-Forming Compounds for Curing Concrete
ASTM C 494	Specification for Chemical Admixtures for Concrete
ASTM C 595	Specification for Blended Hydraulic Cements
ASTM C 618	Specification for Coal Fly Ash and Raw or Calcined Natural Pozzolan for Use as a Mineral Admixture in Concrete

ASTM C 881	Specification for Epoxy-Resin Base Bonding System for Concrete
ASTM C 989	Specification for Ground Granulated Blast-Furnace Slag for Use in Concrete and Mortars
ASTM D 1751	Specification for Preformed Expansion Joint Filler for Concrete Paving and Structural Construction (Nonextruding and Resilient Bituminous Types)
ASTM D 1752	Specification for Preformed Sponge Rubber and Cork Expansion Joint Fillers for Concrete Paving And Structural Construction
ACI 305R	Hot Weather Concreting
ACI 306R	Cold Weather Concreting
ACI 309	Guide for Consolidation of Concrete

MIL-DTL-24441/20a (1999)_Paint, Epoxy-Polyamide, Green Primer, Formula 150, Type III
Department of Defense

END ITEM P-501

ITEM P-603: BITUMINOUS TACK COAT

DESCRIPTION

603-101 This item shall consist of preparing and treating a bituminous or concrete surface with bituminous material in accordance with these specifications and in reasonably close conformity to the lines show on the plans.

MATERIALS

603-2.1 BITUMINOUS MATERIALS. The bituminous material shall be either cutback asphalt, emulsified asphalt, or tar and shall conform to the requirements of Table 1. The type, grade, controlling specification, and application temperature of bituminous material to be used shall be specified by the Engineer.

TABLE 1. BITUMINOUS MATERIAL

		Application Temperature	
Type and Grade	Specification	Deg. F	Deg. C
Emulsified Asphalt			
SS-1, SS-1h	ASTM D 977	75-130	25-55
CSS-1, CSS-1h	ASTM D 2397	75-130	25-55
Cutback Asphalt			
RC-70	ASTM D 2028	120-160	50-70
Tar			
RTCB 5, RTCB 6	AASHTO M 52	60-120	15-50

CONSTRUCTION METHODS

603-3.1 WEATHER LIMITATIONS. The tack coat shall be applied only when the existing surface is dry and the atmospheric temperature is above 60 F (15 C). The temperature requirements may be waived, but only when so directed by the Engineer.

603-3.2 EQUIPMENT. The Contractor shall provide equipment for heating and applying the bituminous material.

The distributor shall be designed, equipped, maintained, and operated so that bituminous material at even heat may be applied uniformly on variable widths of surface at the specified

rate. The allowable variation from the specified rate shall not exceed 10 percent. Distributor equipment shall include a tachometer, pressure gages, volume-measuring devices or a calibrated tank, and a thermometer for measuring temperatures of tank contents. The distributor shall be self-powered and shall be equipped with a power unit for the pump and full circulation spray bars adjustable laterally and vertically.

A power broom and/or blower shall be provided for any required cleaning of the surface to be treated.

603-3.3 APPLICATION OF BITUMINOUS MATERIAL. Immediately before applying the tack coat, the full width of surface to be treated shall be swept with a power broom and/or airblast to remove all loose dirt and other objectionable material.

Emulsified asphalt shall be diluted by the addition of water when directed by the Engineer and shall be applied a sufficient time in advance of the paver to ensure that all water has evaporated before any of the overlying mixture is placed on the tacked surface.

The bituminous material including vehicle or solvent shall be uniformly applied with a bituminous distributor at the rate of 0.05 to 0.15 gallons per square yard (0.24 to 0.72 liters per square meter) depending on the condition of the existing surface. The type of bituminous material and application rate shall be approved by the Engineer prior to application.

Following the application, the surface shall be allowed to cure without being disturbed for such period of time as may be necessary to permit drying out and setting of the tack coat. This period shall be determined by the Engineer. The surface shall then be maintained by the Contractor until the next course has been placed. Suitable precautions shall be taken by the Contractor to protect the surface against damage during this interval.

603-3.4 BITUMINOUS MATERIAL-CONTRACTOR'S RESPONSIBILITY. Samples of the bituminous material that the Contractor proposes to use, together with a statement as to its source and character, must be submitted and approved before use of such material begins. The Contractor shall require the manufacturer or producer of the bituminous material to furnish material subject to this and all other pertinent requirements of the contract. Only satisfactory materials so demonstrated by service tests, shall be acceptable.

The Contractor shall furnish the vendor's certified test reports for each carload, or equivalent, of bituminous material shipped to the project. The report shall be delivered to the Engineer before permission is granted for use of the material. The furnishing of the vendor's certified test report for the bituminous material shall not be interpreted as a basis for final acceptance. All such test reports shall be subject to verification by testing samples of material received for use on the project.

603-3.5 FREIGHT AND WEIGH BILLS. Before the final estimate is allowed, the Contractor shall file with the Engineer receipted bills when railroad shipments are made, and certified weight bills when materials are received in any other manner, of the bituminous materials actually used in the construction covered by the contract. The Contractor shall not remove

bituminous material from the tank car or storage tank until the initial outage and temperature measurements have been taken by the Engineer, nor shall the car or tank be released until the final outage has been taken by the Engineer. Copies of freight bills and weigh bills shall be furnished to the Engineer during the progress of the work.

METHOD OF MEASUREMENT

603-4.1 The bituminous material for tack coat shall be measured by the gallon. Volume shall be corrected to the volume at 60°F (15°C) in accordance with ASTM D 1250 for cutback asphalt, ASTM D 633 for tar, and Table

603-4.2 IV-3 of The Asphalt Institute's Manual MS-6 for emulsified asphalt. Water added to emulsified asphalt will not be measured for payment.

BASIS OF PAYMENT

603.5-1 Payment shall be made at the contract unit price per gallon of bituminous material. This price shall be full compensation for furnishing all materials, for all preparation, delivery, and application of these materials, and for all labor, equipment, tools, and incidentals necessary to complete the item.

Payment will be made under:

Item P-603	Bituminous Tack Coat—per gallon

MATERIAL REQUIREMENTS

ASTM D 633	Volume Correction Table for Road Tar
ASTM D 977	Emulsified Asphalt
ASTM D 1250	Petroleum Measurement Tables
ASTM D 2028	Liquid Asphalt (Rapid-Curing Type)
ASTM D 2397	Cationic Emulsified Asphalt
AASHTO M 52	Tar for Use in Road Construction
Asphalt Institute	Temperature-Volume Corrections for Emulsified Asphalts Manual MS-6 Table IV-3

END ITEM P-603

ITEM P-610 STRUCTURAL PORTLAND CEMENT CONCRETE

DESCRIPTION

610-1.1 This item shall consist of **reinforced** structural portland cement concrete, prepared and constructed in accordance with these specifications, at the locations and of the form and dimensions shown on the plans.

MATERIALS

610-2.1 GENERAL. Only approved materials, conforming to the requirements of these specifications, shall be used in the work. They may be subjected to inspection and tests at any time during the progress of their preparation or use. The source of supply of each of the materials shall be approved by the Engineer before delivery or use is started. Representative preliminary samples of the materials shall be submitted by the Contractor, when required, for examination and test. Materials shall be scored and handled to insure the preservation of their quality and fitness for use and shall be located to facilitate prompt inspection. All equipment for handling and transporting materials and concrete must be clean before any material or concrete is placed therein.

In no case shall the use of pit-run or naturally mixed aggregates be permitted. Naturally mixed aggregate shall be screened and washed, and all fine and coarse aggregates shall be stored separately and kept clean. The mixing of different kinds of aggregates from different sources in one storage pile or alternating batches of different aggregates will not be permitted.

Aggregates shall be tested for deleterious reactivity with alkalies in the cement that may cause excessive expansion of the concrete. Acceptance of aggregates shall be based upon satisfactory evidence furnished by the Contractor that the aggregates, combined with other mixture constituents, do not produce excessive expansion in the concrete. This evidence shall include service records of concrete of comparable properties under similar conditions or exposure and certified records of tests by a testing laboratory that meets the requirements of ASTM C 1077. Tests shall be made in accordance with ASTM C 1260. Test specimens shall be produced using all components (e.g. coarse aggregate, fine aggregate, cement and fly ash...) to be included in the produced concrete. If the mean expansion of the test specimens, tested in accordance with ASTM C 1260, does not exceed 0.10 % at 16 days from casting the aggregates shall be accepted. If the mean expansion at 16 days is greater than 0.10% but less than 0.15%, the aggregate may be accepted based upon satisfactory service records and acceptance of the aggregate by a State Highway Department specifically addressing Alkali-Silica Reactivity. If the expansion is greater than 0.15%, the aggregate shall not be accepted for use.

610-2.2 COARSE AGGREGATE. The coarse aggregate for concrete shall meet the requirements of ASTM C 33. Crushed stone aggregate shall have a durability factor, as determined by ASTM C 666, greater than or equal to 95. The Engineer may consider and reserve final approval of other State classification procedures addressing aggregate durability.

Coarse aggregate shall be well graded from coarse to fine and shall meet one of the gradations shown in Table 1, using ASTM C 136.

610-2.3 FINE AGGREGATE. The fine aggregate for concrete shall meet the requirements of ASTM C 33.

The fine aggregate shall be well graded from fine to coarse and shall meet the requirements of Table 2 when tested in accordance with ASTM C 136:

TABLE 1. GRADATION FOR COARSE AGGREGATE

Sieve Designation (square openings)	Percentage by Weight Passing Sieves						
	2"	1-1/2"	1"	3/4"	1/2"	3/8"	No.4
No. 4 to 3/4 in. (4.75-19.0 mm)			100	90-100		20-55	0-10
No. 4 to 1 in. (4.75-25.0 mm)		100	90-100		25-60		0-10
No. 4 to 1-1/2 in. (4.75-38.1 mm)	100	95-100		35-70		10-30	0-5

TABLE 2. GRADATION FOR FINE AGGREGATE

Sieve Designation (square openings)	Percentage by Weight Passing Sieves
3/8 inch (9.5 mm)	100
No. 4 (4.75 mm)	95-100
No. 16 (1.18 mm)	45-80
No. 30 (0.60 mm)	25-55
No. 50 (0.30 mm)	10-30
No. 100 (0.15 mm)	2-10

Blending will be permitted, if necessary, in order to meet the gradation requirements for fine aggregate. Fine aggregate deficient in the percentage of material passing the No. 50 mesh sieve may be accepted, provided that such deficiency does not exceed 5% and is remedied by the addition of pozzolanic or cementitious materials other than portland cement, as specified in 610-2.6 on admixtures, in sufficient quantity to produce the required workability as approved by the Engineer.

610-2.4 CEMENT.

The Contractor shall furnish vendors' certified test reports for each carload, or equivalent, of cement shipped to the project. The report shall be delivered to the Engineer before permission to use the cement is granted. All such test reports shall be subject to verification by testing sample materials received for use on the project.

610-2.5 WATER. The water used in concrete shall be free from sewage, oil, acid, strong alkalies, vegetable matter, and clay and loam. If the water is of questionable quality, it shall be tested in accordance with AASHTO T 26.

610-2.6 ADMIXTURES. The use of any material added to the concrete mix shall be approved by the Engineer. Before approval of any material, the Contractor shall be required to submit the results of complete physical and chemical analyses made by an acceptable testing laboratory. Subsequent tests shall be made of samples taken by the Engineer from the supply of the material being furnished or proposed for use on the work to determine whether the admixture is uniform in quality with that approved.

Pozzolanic admixtures shall be fly ash or raw or calcined natural pozzolons meeting the requirements of ASTM C 618.

Air-entraining admixtures shall meet the requirements of ASTM C 260. Air-entraining admixtures shall be added at the mixer in the amount necessary to produce the specified air content.

Water-reducing, set-controlling admixtures shall meet the requirements of ASTM C 494, Type A, water-reducing or Type D, water-reducing and retarding. Water-reducing admixtures shall be added at the mixer separately from air-entraining admixtures in accordance with the manufacturer's printed instructions.

610-2.7 PREMOLDED JOINT MATERIAL. Premolded joint material for expansion joints shall meet the requirements of ASTM **D 1751.**

610-2.8 JOINT FILLER. The filler for joints shall meet the requirements of Item P-605, unless otherwise specified in the proposal.

610-2.9 STEEL REINFORCEMENT. Reinforcing shall consist of deformed bars.

Welded Steel Wire Fabric	**ASTM A 185**
Welded Deformed Steel Fabric	**ASTM A 497**
Bar Mats	**ASTM A 184 or A 704**

610-2.10 COVER MATERIALS FOR CURING. Curing materials shall conform to one of the following specifications:

Waterproof paper for curing concrete	ASTM C 171

Polyethylene Sheeting for Curing Concrete	ASTM C 171
Liquid Membrane-Forming Compounds for Curing Concrete	ASTM C 309, Type 2

CONSTRUCTION METHODS

610-3.1 GENERAL. The Contractor shall furnish all labor, materials, and services necessary for, and incidental to, the completion of all work as shown on the drawings and specified herein. All machinery and equipment owned or controlled by the Contractor, which he proposes to use on the work, shall be of sufficient size to meet the requirements of the work, and shall be such as to produce satisfactory work; all work shall be subject to the inspection and approval of the Engineer.

610-3.2 CONCRETE COMPOSITION. The concrete shall develop a compressive strength of **4200** psi in 28 days as determined by test cylinders made in accordance with ASTM C 31 and tested in accordance with ASTM C 39. The concrete shall contain not less than 470 pounds of cement per cubic yard (280 kg per cubic meter). The concrete shall contain 5 percent of entrained air, plus or minus 1 percent, as determined by ASTM C 231 and shall have a slump of not more than 4 inches (10 cm) as determined by ASTM C 143.

610-3.3 ACCEPTANCE SAMPLING AND TESTING. Concrete for each structure will be accepted on the basis of the compressive strength specified in paragraph 3.2. The concrete shall be sampled in accordance with ASTM C 172. Compressive strength specimens shall be made in accordance with ASTM C 31 and tested in accordance with ASTM C 39.

Concrete cylindrical test specimens shall be made in accordance with ASTM C 31 and tested in accordance with ASTM C 39. The Contractor shall cure and store the test specimens under such conditions as directed. The Engineer will make the actual tests on the specimens at no expense to the contractor.

610-3.4 PROPORTIONING AND MEASURING DEVICES. When package cement is used, the quantity for each batch shall be equal to one or more whole sacks of cement. The aggregates shall be measured separately by weight. If aggregates are delivered to the mixer in batch trucks, the exact amount for each mixer charge shall be contained in each batch compartment. Weighing boxes or hoppers shall be approved by the Engineer and shall provide means of regulating the flow of aggregates into the batch box so that the required and exact weight of aggregates can be readily obtained.

610-3.5 CONSISTENCY. The consistency of the concrete shall be checked by the slump test specified in ASTM C 143.

610-3.6 MIXING. Concrete may be mixed at the construction site, at a central point, or wholly or in part in truck mixers. The concrete shall be mixed and delivered in accordance with the requirements of ASTM C 94.

610-3.7 MIXING CONDITIONS. The concrete shall be mixed only in quantities required for immediate use. Concrete shall not be mixed while the air temperature is below 40°F (4°C) without permission of the Engineer. If permission is granted for mixing under such conditions, aggregates or water, or both, shall be heated and the concrete shall be placed at a temperature not less than 50°F (10°C) nor more than 100°F (38°C). The Contractor shall be held responsible for any defective work, resulting from freezing or injury in any manner during placing and curing, and shall replace such work at his/her expense.

Retempering of concrete by adding water or any other material shall not be permitted.

The delivery of concrete to the job shall be in such a manner that batches of concrete will be deposited at uninterrupted intervals.

610-3.8 FORMS. Concrete shall not be placed until all the forms and reinforcements have been inspected and approved by the Engineer. Forms shall be of suitable material and shall be of the type, size, shape, quality, and strength to build the structure as designed on the plans. The forms shall be true to line and grade and shall be mortar-tight and sufficiently rigid to prevent displacement and sagging between supports. The Contractor shall bear responsibility for their adequacy. The surfaces of forms shall be smooth and free from irregularities, dents, sags, and holes.

The internal ties shall be arranged so that, when the forms are removed, no metal will show in the concrete surface or discolor the surface when exposed to weathering. All forms shall be wetted with water or with a non-staining mineral oil, which shall be applied shortly before the concrete is placed. Forms shall be constructed so that they can be removed without injuring the concrete or concrete surface. The forms shall not be removed before the expiration of at least 30 hours from vertical faces, walls, slender columns, and similar structures; forms supported by falsework under slabs, beams, girders, arches, and similar construction shall not be removed until tests indicate that at least 60% of the design strength of the concrete has developed.

610-3.9 PLACING REINFORCEMENT. All reinforcement shall be accurately placed, as shown on the plans, and shall be firmly held in position during concreting. Bars shall be fastened together at intersections. The reinforcement shall be supported by approved metal chairs. Shop drawings, lists, and bending details shall be supplied by the Contractor when required.

610-3.10 EMBEDDED ITEMS. Before placing concrete, any items that are to be embedded shall be firmly and securely fastened in place as indicated. All such items shall be clean and free from coating, rust, scale, oil, or any foreign matter. The embedding of wood shall be avoided. The concrete shall be spaded and consolidated around and against embedded items.

610-3.11 PLACING CONCRETE. All concrete shall be placed during daylight, unless otherwise approved. The concrete shall not be placed until the depth and character of foundation, the adequacy of forms and falsework, and the placing of the steel reinforcing have been approved. Concrete shall be placed as soon as practical after mixing and in no case later than 1 hour after water has been added to the mix. The method and manner of placing shall be

such to avoid segregation and displacement of the reinforcement. Troughs, pipes, and chutes shall be used as an aid in placing concrete when necessary. Dropping the concrete a distance of more than 5 feet (1.5 m), or depositing a large quantity at one point, will not be permitted. Concrete shall be placed upon clean, damp surfaces, free from running water, or upon properly consolidated soil.

The concrete shall be compacted with suitable mechanical vibrators operating within the concrete. When necessary, vibrating shall be supplemented by hand spading with suitable tools to assure proper and adequate compaction. Vibrators shall be manipulated so as to work the concrete thoroughly around the reinforcement and embedded fixtures and into corners and angles of the forms. The vibration at any joint shall be of sufficient duration to accomplish compaction but shall not be prolonged to the point where segregation occurs. Concrete deposited under water shall be carefully placed in a compact mass in its final position by means of a tremie, a closed bottom dump bucket, or other approved method and shall not be disturbed after being deposited.

610-3.12 CONSTRUCTION JOINTS. When the placing of concrete is suspended, necessary provisions shall be made for joining future work before the placed concrete takes its initial set. For the proper bonding of old and new concrete, such provisions shall be made for grooves, steps, keys, dovetails, reinforcing bars or other devices as may be prescribed. The work shall be arranged so that a section begun on any day shall be finished during daylight of the same day. Before depositing new concrete on or against concrete that has hardened, the surface of the hardened concrete shall be cleaned by a heavy steel broom, roughened slightly, wetted, and covered with a neat coating of cement paste or grout.

610-3.13 EXPANSION JOINTS. Expansion joints shall be constructed at such points and of such dimensions as may be indicated on the drawings. The premolded filler shall be cut to the same shape as that of the surfaces being joined. The filler shall be fixed firmly against the surface of the concrete already in place in such manner that it will not be displaced when concrete is deposited against it.

610-3.14 DEFECTIVE WORK. Any defective work discovered after the forms have been removed shall be immediately removed and replaced. If any dimensions are deficient, or if the surface of the concrete is bulged, uneven, or shows honeycomb, which in the opinion of the Engineer cannot be repaired satisfactorily, the entire section shall be removed and replaced at the expense of the Contractor.

610-3.15 SURFACE FINISH. All exposed concrete surfaces shall be true, smooth, and free from open or rough spaces, depressions, or projections. The concrete in horizontal plane surfaces shall be brought flush with the finished top surface at the proper elevation and shall be struck-off with a straightedge and floated. Mortar finishing shall not be permitted, nor shall dry cement or sand-cement mortar be spread over the concrete during the finishing of horizontal plane surfaces.

When directed, the surface finish of exposed concrete shall be a rubbed finish. If forms can be removed while the concrete is still green, the surface shall be pointed and wetted and then rubbed

with a wooden float until all irregularities are removed. If the concrete has hardened before being rubbed, a carborundum stone shall be used to finish the surface. When approved, the finishing can be done with a rubbing machine.

610-3.16 CURING AND PROTECTION. All concrete shall be properly cured and protected by the Contractor. The work shall be protected from the elements, flowing water, and from defacement of any nature during the building operations. The concrete shall be cured as soon as it has sufficiently hardened by covering with an approved material. Water-absorptive coverings shall be thoroughly saturated when placed and kept saturated for a period of at least 3 days. All curing mats or blankets shall be sufficiently weighted or tied down to keep the concrete surface covered and to prevent the surface from being exposed to currents of air. Where wooden forms are used, they shall be kept wet at all times until removed to prevent the opening of joints and drying out of the concrete. Traffic shall not be allowed on concrete surfaces for 7 days after the concrete has been placed.

610-3.17 DRAINS OR DUCTS. Drainage pipes, conduits, and ducts that are to be encased in concrete shall be installed by the Contractor before the concrete is placed. The pipe shall be held rigidly so that it will not be displaced or moved during the placing of the concrete.

610-3.18 COLD WEATHER PROTECTION. When concrete is placed at temperatures below 40°F (4°C), the Contractor shall provide satisfactory methods and means to protect the mix from injury by freezing. The aggregates, or water, or both, shall be heated in order to place the concrete at temperatures between 50°F and 100°F (10°C and 38°C).

Calcium chloride may be incorporated in the mixing water when directed by the Engineer. Not more than 2 pounds (908 grams) of Type 1 nor more than 1.6 pounds (726 grams) of Type 2 shall be added per bag of cement. After the concrete has been placed, the Contractor shall provide sufficient protection such as cover, canvas, framework, heating apparatus, etc., to enclose and protect the structure and maintain the temperature of the mix at not less than 50°F (10°C) until at least 60% of the designed strength has been attained.

610-3.19 FILLING JOINTS. All joints that require filling shall be thoroughly cleaned, and any excess mortar or concrete shall be cut out with proper tools. Joint filling shall not be started until after final curing and shall be done only when the concrete is completely dry. The cleaning and filling shall be carefully done with proper equipment and in a manner to obtain a neat looking joint free from excess filler.

METHOD OF MEASUREMENT

610-4.1 No separate measurement for payment will be made other than core measurements for determining thickness within tolerance specified.

BASIS OF PAYMENT

610-5.1 No separate payment will be made for P-610 Structural Portland Cement Concrete. Payment shall be full compensation for all labor, materials, tools, equipment and incidentals required to complete the work as specified herein and on the drawings.

TESTING REQUIREMENTS

ASTM C 31 Making and Curing Test Specimens in the Field

ASTM C 39 Compressive Strength of Cylindrical Concrete Specimens

ASTM C 136 Sieve Analysis of Fine and Coarse Aggregates

ASTM C 138 Density (Unit Weight), Yield, and Air Content (Gravimetric) of Concrete

ASTM C 143 Slump of Hydraulic Cement Concrete

ASTM C 231 Air Content of Freshly Mixed Concrete by the Pressure Method

ASTM C 666 Resistance of Concrete to Rapid Freezing and Thawing

ASTM C 1077 Laboratories Testing Concrete and Concrete Aggregates for Use in Construction and Criteria for Laboratory Evaluation

ASTM C 1260 Potential Alkali Reactivity of Aggregates (Mortar-Bar Method)

ASTM A 184 Specification for Fabricated Deformed Steel Bar or Rod Mats for Concrete Reinforcement

ASTM A 185 Steel Welded Wire Fabric, Plain, for Concrete Reinforcement

ASTM A 497 Steel Welded Wire Fabric, Deformed, for Concrete Reinforcement

ASTM A 615 Deformed and Plain Billet-Steel Bars for Concrete Reinforcement

ASTM A 704 Welded Steel Plain Bars or Rod Mats for Concrete Reinforcement

ASTM C 33 Concrete Aggregates

ASTM C 94 Ready-Mixed Concrete

ASTM C 150 Portland Cement

ASTM C 171 Sheet Materials for Curing Concrete

ASTM C 172 Sampling Freshly Mixed Concrete

ASTM C 260 Air-Entraining Admixtures for Concrete

ASTM C 309 Liquid Membrane-Forming Compounds for Curing Concrete

ASTM C 494 Chemical Admixtures for Concrete

ASTM C 595 Blended Hydraulic Cements

ASTM C 618 Coal Fly Ash and Raw or Calcined Natural Pozzolan for Use as a Mineral Admixture in Concrete

ASTM D 1751 Specification for Preformed Expansion Joint Fillers for Concrete Paving and Structural Construction (Non-extruding and Resilient Bituminous Types)

ASTM D 1752 Specification for Preformed Sponge Rubber and Cork Expansion Joint Fillers for Concrete Paving and Structural Construction

AASHTO T 26 Quality of Water to be Used in Concrete

END ITEM P-610

CLARIFICATIONS TO SPECIFICATIONS ITEM P-620

The provisions of this specification shall be applicable except as modified as follows:

620-1.1 This item shall consist of the painting of permanent numbers, markings, and stripes on the surface of runways and taxiways applied in accordance with these specifications and at the locations shown on the plans, or as directed by the engineer. Temporary markings including runway closure markers and marking the taxiway for a temporary runway use is not for direct compensation.

620-2.1 PAINT. Paint shall meet the requirements of Fed. Spec. TT-P-1952.

620-2.2 REFLECTIVE MEDIA. Reflective Media is required. See 620-2.2.

ITEM P-620: RUNWAY AND TAXIWAY PAINTING

DESCRIPTION

620-1.1 This item shall consist of the painting of numbers, markings, and stripes on the surface of runways and taxiways applied in accordance with these specifications and at the locations shown on the plans, or as directed by the engineer.

MATERIALS

620-2.1 PAINT. Paint shall meet the requirements of Fed. Spec. TT-P-1952.

620-2.2 REFLECTIVE MEDIA. Glass spheres shall meet the requirements of Fed. Spec. TT-B-1325, Type III, gradation A.

CONSTRUCTION METHODS

620-3.1 WEATHER LIMITATIONS. The painting shall be performed only when the surface is dry, when the atmospheric temperature is above 45 F (7 C), and when the weather is not foggy or windy.

620-3.2 EQUIPMENT. All equipment for the work shall be approved by the engineer and shall include the apparatus necessary to properly clean the existing surface, a mechanical marking machine, and such auxiliary hand-painting equipment as may be necessary to satisfactorily complete the job.

The mechanical marker shall be an atomizing spray-type marking machine suitable for application of traffic paint. It shall produce an even and uniform film thickness at the required coverage and shall be designed so as to apply markings of uniform cross sections and clear-cut edges without running or spattering.

620-3.3 PREPARATION OF SURFACE. Immediately before application of the paint, the surface shall be dry and free from dirt, grease, oil, laitance, or other foreign material which would reduce the bond between the paint and the pavement. The area to be painted shall be cleaned by seeping and blowing or by other methods as required to remove all dirt, laitance, and loose materials.

620-3.4 LAYOUT OF MARKINGS. On those sections of pavement where no previously applied markings are available to serve as a guide, the proposed markings shall be laid out in advance of the paint application.

620-3.5 APPLICATION. Markings shall be applied at the locations and to the dimensions and spacing shown on the plans. Paint shall not be applied until the layout and conditions of the surface have been approved by the engineer.

The paint shall be mixed in accordance with the manufacturer's instructions and applied to the pavement with a marking machine at the rate of 100 to 110 square feet (9 to 10 square meters) per gallon (liter). The addition of thinner will not be permitted. A period of 24 hours shall elapse between placement of a bituminous surface course or seal coat and application of the paint.

The edges of the markings shall not vary from a straight line more than ½ inch (12 mm) in 50 feet (15 m), and the dimensions shall be within a tolerance of plus or minus 5 percent. Glass spheres shall be distributed to the surface of the marked areas immediately after application of the paint. A dispenser shall be furnished which is properly designed for attachment to the marking machine and suitable for dispensing glass spheres. The spheres shall be applied at the rate of 10 pounds per gallon (1.2 kg per liter) of paint.

The contractor shall furnish certified test reports for the material shipped to the project. The reports shall not be interpreted as a basis for final acceptance. The contractor shall notify the engineer upon arrival of a shipment of paint to the job site. All emptied containers shall be returned to the paint storage area for checking by the engineer. The containers shall not be removed from the airport or destroyed until authorized by the engineer.

620-3.6 PROTECTION. After application of the paint, all markings shall be protected from damage until the paint is dry. All surfaces shall be protected from disfiguration by splatter, splashes, spillage, or drippings of paint.

METHOD OF MEASUREMENT

620-4.1 The quantity of runway and taxiway markings to be paid for shall be the number of square feet of painting and the number of square feet of preformed markings one complete item in place performed in accordance with the specifications and accepted by the Engineer.

BASIS OF PAYMENT

620-5.1 Payment shall be made at the respective contract price per square foot for runway and taxiway painting and price per square foot for preformed markings. This price shall be full compensation for furnishing all materials and for all labor, equipment, tools, and incidentals necessary to complete the item.

Payment will be made under:

Item P 620 5.1(A) Runway and Taxiway Painting per square foot

MATERIAL REQUIREMENTS

Fed. Spec. TT-P-85	Paint, Traffic, and Airfield Marking, Solvent Base
Fed. Spec. TT-P-1952	Paint, Traffic and Airfield Marking, Water Emulsion Base
Fed. Spec. TT-P-110	Paint, Traffic Black (Nonreflectorized)
Fed. Spec. TT-B-1325	Beads (Glass Spheres) Retroreflective

END ITEM P-620

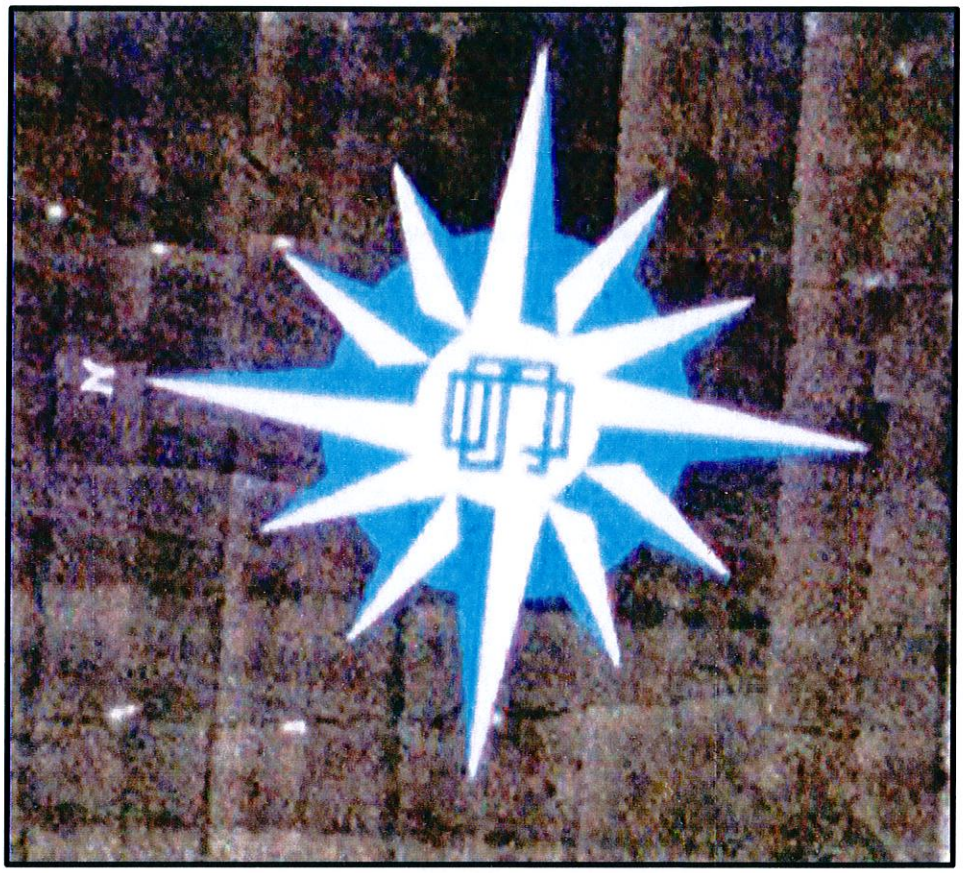

COMPASS ROSE

SCALE: 0'-1" = 20'-0"

PART IX – DRAINAGE

ITEM D-701 PIPE FOR STORM DRAINS AND CULVERTS

DESCRIPTION

701-1.1 This item shall consist of the construction of pipe culverts and storm drains in accordance with these specifications and in reasonably close conformity with the lines and grades shown on the plans.

MATERIALS

701-2.1 Materials shall meet the requirements shown on the plans and specified below.

701-2.2 PIPE. The pipe shall be of the type called for on the plans or in the proposal and shall be in accordance with the following appropriate requirements.

Reinforced Concrete Pipe	ASTM C 76
Poly (Vinyl Chloride) Ribbed Drain Pipe & Fittings Based on Controlled Inside Diameter	ASTM F 794

701-2.3 CONCRETE. Concrete for pipe cradles shall have a minimum compressive strength of 2000 psi (13.8 MPa) at 28 days and conform to the requirements of ASTM C 94.

701-2.4 RUBBER GASKETS. Rubber gaskets for rigid pipe shall conform to the requirements of ASTM C 443. Rubber gaskets for PVC pipe and polyethylene pipe shall conform to the requirements of ASTM F 477. Rubber gaskets for zinc-coated steel pipe and precoated galvanized pipe shall conform to the requirements of ASTM D 1056, for the "RE" closed cell grades.

701-2.5 JOINT MORTAR. Pipe joint mortar shall consist of one part portland cement and two parts sand. The portland cement shall conform to the requirements of ASTM C 150, Type I. The sand shall conform to the requirements of ASTM C 144.

701-2.6 JOINT FILLERS. Poured filler for joints shall conform to the requirements of ASTM D 1190.

701-2.7 PLASTIC GASKETS. Plastic gaskets shall conform to the requirements of AASHTO M 198 (Type B).

CONSTRUCTION METHODS

701-3.1 EXCAVATION. The width of the pipe trench shall be sufficient to permit satisfactory jointing of the pipe and thorough tamping of the bedding material under and around the pipe, but it shall not be less than the external diameter of the pipe plus 6 inches (150 mm) on each side. The trench walls shall be approximately vertical.

Where rock, hardpan, or other unyielding material is encountered, the Contractor shall remove it from below the foundation grade for a depth of at least 12 inches (300 mm) or one-half inch (12 mm) for each foot of fill over the top of the pipe (whichever is greater) but for no more than three-quarters of the nominal diameter of the pipe. The width of the excavation shall be at least 1 foot (30 cm) greater than the horizontal outside diameter of the pipe. The excavation below grade shall be backfilled with selected fine compressible material, such as silty clay or loam, and lightly compacted in layers not over 6 inches (150 mm) in uncompacted depth to form a uniform but yielding foundation.

Where a firm foundation is not encountered at the grade established, due to soft, spongy, or other unstable soil, the unstable soil shall be removed and replaced with approved granular material for the full trench width. The Engineer shall determine the depth of removal necessary. The granular material shall be compacted to provide adequate support for the pipe.

The excavation for pipes that are placed in embankment fill shall not be made until the embankment has been completed to a height above the top of the pipe as shown on the plans.

701-3.2 BEDDING. The pipe bedding shall conform to the class specified on the plans. When no bedding class is specified or detailed on the plans, the requirements for Class C bedding shall apply.

a. Rigid Pipe. Class A bedding shall consist of a continuous concrete cradle conforming to the plan details.

Class B bedding shall consist of a bed of granular material having a thickness of at least 6 inches (150 mm) below the bottom of the pipe and extending up around the pipe for a depth of not less than 30 percent of the pipe's vertical outside diameter. The layer of bedding material shall be shaped to fit the pipe for at least 10 percent of the pipe's vertical diameter and shall have recesses shaped to receive the bell of bell and spigot pipe. The bedding material shall be sand or selected sandy soil, all of which passes a 3/8 inch (9 mm) sieve and not more than 10 percent of which passes a No. 200 (0.075 mm) sieve.

Class C bedding shall consist of bedding the pipe in its natural foundation to a depth of not less than 10 percent of the pipe's vertical outside diameter. The bed shall be shaped to fit the pipe and shall have recesses shaped to receive the bell of bell and spigot pipe.

b. Flexible Pipe. For flexible pipe, the bed shall be roughly shaped to fit the pipe, and a bedding blanket of sand or fine granular material shall be provided as follows:

Pipe Corrugation Depth		Minimum Bedding Depth	
in.	mm	in.	mm
1/2	12.5	1	25.0
1	25.0	2	50.0
2	50.0	3	75.0
2-1/2	62.5	3-1/2	87.5

c. PVC and Polyethylene Pipe. For PVC and polyethylene pipe, the bedding material shall consist of coarse sands and gravels with a maximum particle size of 3/4-inch (13 mm). For pipes installed under paved areas, no more than 12 percent of the material shall pass the No. 200 (0.075 mm) sieve. For all other areas, no more than 50 percent of the material shall pass the No. 200 (0.075 mm) sieve. The bedding shall have a thickness of at least 6 inches (150 mm) below the bottom of the pipe and extend up around the pipe for a depth of not less than 50 percent of the pipe's vertical outside diameter.

701-3.3 LAYING PIPE. The pipe laying shall begin at the lowest point of the trench and proceed upgrade. The lower segment of the pipe shall be in contact with the bedding throughout its full length. Bell or groove ends of rigid pipes and outside circumferential laps of flexible pipes shall be placed facing upgrade.

Paved or partially lined pipe shall be placed so that the longitudinal center line of the paved segment coincides with the flow line.

Elliptical and elliptically reinforced pipes shall be placed with the manufacturer's top of pipe mark within five degrees of a vertical plane through the longitudinal axis of the pipe.

701-3.4 JOINING PIPE. Joints shall be made with (1) portland cement mortar, (2) portland cement grout, (3) rubber gaskets, (4) plastic gaskets, or (5) coupling bands.

Mortar joints shall be made with an excess of mortar to form a continuous bead around the outside of the pipe and shall be finished smooth on the inside. Molds or runners shall be used for grouted joints in order to retain the poured grout. Rubber ring gaskets shall be installed to form a flexible watertight seal.

a. Concrete Pipe. Concrete pipe may be either bell and spigot or tongue and groove. The method of joining pipe sections shall be such that the ends are fully entered, and the inner surfaces are reasonably flush and even. Joints shall be thoroughly wetted before mortar or grout is applied.

b. PVC and Polyethylene Pipe. Joints for PVC and Polyethylene pipe shall conform to the requirements of ASTM D 3212 when water tight joints are required. Joints for PVC and Polyethylene pipe shall conform to the requirements of AASHTO M 304 when soil tight joints are required. Fittings for polyethylene pipe shall conform to the requirements of AASHTO M 252 or M 294M.

701-3.5 BACKFILLING. Pipes shall be inspected before any backfill is placed; any pipes found to be out of alignment, unduly settled, or damaged shall be removed and relaid or replaced at the Contractor's expense.

Material for backfill shall be fine, readily compatible soil, granular material selected from the excavation or a source of the Contractor's choosing. It shall not contain frozen lumps, stones that would be retained on a 2-inch (50.0 mm) sieve, chunks of highly plastic clay, or other objectionable material. No less than 95 percent of a granular backfill material shall pass through a 1/2 inch (12 mm) sieve, and no less than 95 percent of it shall be retained on a No. 4 (4.75 mm) sieve.

When the top of the pipe is even with or below the top of the trench, the backfill shall be compacted in layers not exceeding 6 inches (150 mm) on both sides of the pipe and shall be brought up one foot (30 cm) above the top of the pipe or to natural ground level, whichever is greater. Care shall be exercised to thoroughly compact the backfill material under the haunches of the pipe. Material shall be brought up evenly on both sides of the pipe.

When the top of the pipe is above the top of the trench, the backfill shall be compacted in layers not exceeding 6 inches (150 mm) and shall be brought up evenly on both sides of the pipe to 1 foot (30 cm) above the top of the pipe. The width of backfill on each side of the pipe for the portion above the top of the trench shall be equal to twice the pipe's diameter of 12 feet (3.5 m), whichever is less.

For PVC and polyethylene pipe, the backfill shall be placed in two stages; first to the top of the pipe and then at least 12 inches (300 mm) over the top of the pipe. The backfill material shall meet the requirements of paragraph 701-3.2c.

All backfill shall be compacted to the density required under Item P-152.

METHOD OF MEASUREMENT

701-4.1 The length of pipe shall be measured in linear feet of pipe in place, completed, and approved. It shall be measured along the centerline of the pipe from end or inside face of structure to the end or inside face of structure, whichever is applicable. The several classes, types and size shall be measured separately. All fittings shall be included in the footage as typical pipe sections in the pipe being measured.

BASIS OF PAYMENT

701-5.1 Payment will be made at the contract unit price per linear foot for each kind of pipe of the type and size designated; at the contract unit price per cubic yard of concrete for pipe cradles; and at the contract unit price per cubic yard for rock excavation.

These prices shall fully compensate the Contractor for furnishing all materials and for all preparation, excavation, and installation of these materials; and for all labor, equipment, tools, and incidentals necessary to complete the item.

Payment will be made under:

Item 701-5.1(E)	15" inch poly (vinyl chloride) ribbed drain pipe & fittings per linear foot

MATERIAL REQUIREMENTS

ASTM C 14	Concrete Sewer, Storm Drain, and Culvert Pipe
ASTM C 76	Reinforced Concrete Culvert, Storm Drain, and Sewer Pipe
ASTM C 94	Ready Mixed Concrete
ASTM C 144	Aggregate for Masonry Mortar
ASTM C 150	Portland Cement
ASTM C 443	Joints for Circular Concrete Sewer and Culvert Pipe, Using Rubber Gaskets
ASTM C 506	Reinforced Concrete Arch Culvert, Storm Drain, and Sewer Pipe
ASTM C 1433	Precast Reinforced Concrete Box Sections for Culverts, Storm Drains, and Sewers
ASTM D 3034	Type PSM Poly (Vinyl Chloride) (PVC) Sewer Pipe and Fittings
ASTM D 3212	Joints for Drain and Sewer Plastic Pipes Using Flexible Elastomeric Seals
ASTM D 6690	Joint and Crack Sealants, Hot-Applied, for Concrete and Asphalt Pavements
ASTM F 477	Elastomeric Seals (Gaskets) for Joining Plastic Pipe
ASTM F 794	Poly (Vinyl Chloride) Ribbed Drain Pipe & Fittings Based on Controlled Inside Diameter

ASTM F 949	Poly (Vinyl Chloride) (PVC) Corrugated Sewer Pipe With a Smooth Interior and Fittings
AASHTO M 198	Joints for Circular Concrete Sewer and Culvert Pipe Using Flexible Watertight Gaskets
AASHTO M 304	Poly (Vinyl Chloride) (PVC) Profile Wall Drain Pipe and Fittings Based on Controlled Inside Diameter

END ITEM D-701

CLARIFICATIONS TO SPECIFICATIONS ITEM D-751

The provisions of this specification shall be applicable except as modified as follows:

This project Item D-751is for cast in place inlets. Only cast in place is allowed. No pre-cast structures allowed.

ITEM D-751 MANHOLES, CATCH BASINS, INLETS AND INSPECTION HOLES

DESCRIPTION

751-1.1 This item shall consist of construction of manholes, catch basins, inlets, and inspection holes, in accordance with these specifications, at the specified locations and conforming to the lines, grades, and dimensions shown on the plans or required by the Engineer.

MATERIALS

751-2.1 BRICK. The brick shall conform to the requirements of ASTM C 32, Grade SM.

751-2.2 MORTAR. Mortar shall consist of one part portland cement and two parts sand. The portland cement shall conform to the requirements of ASTM C 150, Type I. The sand shall conform to the requirements of ASTM C 144.

751-2.3 CONCRETE. Plain and reinforced concrete used in structures, connections of pipes with structures, and the support of structures or frames shall conform to the requirements of Item P-610.

751-2.4 PRECAST CONCRETE PIPE MANHOLE RINGS. Precast concrete pipe manhole rings shall conform to the requirements of ASTM C 478. Unless otherwise specified, the risers and offset cone sections shall have an inside diameter of not less than 36 inches (90 cm) nor more than 48 inches (120 cm).

751-2.5 CORRUGATED METAL. Corrugated metal shall conform to the requirements of AASHTO M 36.

751-2.6 FRAMES, COVERS, AND GRATES. The castings shall conform to one of the following requirements:

a. Gray iron castings shall meet the requirements of ASTM A 48, Class 30B and 35B.

b. Malleable iron castings shall meet the requirements of ASTM A 47.

c. Steel castings shall meet the requirements of ASTM A 27.

d. Structural steel for grates and frames shall conform to the requirements of ASTM A 283, Grade D.

e. Ductile iron castings shall conform to the requirements of ASTM A 536.

f. Austempered ductile iron castings shall conform to the requirements of ASTM A 897.

All castings or structural steel units shall conform to the dimensions shown on the plans and shall be designed to support the loadings, aircraft gear configuration and/or direct loading, specified.

Each frame and cover or grate unit shall be provided with fastening members to prevent it from being dislodged by traffic but which will allow easy removal for access to the structure.

All castings shall be thoroughly cleaned. After fabrication, structural steel units shall be galvanized to meet the requirements of ASTM A 123.

751-2.7 STEPS. The steps or ladder bars shall be gray or malleable cast iron or galvanized steel. The steps shall be the size, length, and shape shown on the plans and those steps that are not galvanized shall be given a coat of bituminous paint, when directed.

CONSTRUCTION METHODS

751-3.1 UNCLASSIFIED EXCAVATION.

a. The Contractor shall do all excavation for structures and structure footings to the lines and grades or elevations, shown on the plans, or as staked by the Engineer. The excavation shall be of sufficient size to permit the placing of the full width and length of the structure or structure footings shown. The elevations of the bottoms of footings, as shown on the plans, shall be considered as approximately only; and the Engineer may order, in writing, changes in dimensions or elevations of footings necessary to secure a satisfactory foundation.

b. Boulders, logs, or any other objectionable material encountered in excavation shall be removed. All rock or other hard foundation material shall be cleaned of all loose material and cut to a firm surface either level, stepped, or serrated, as directed by the Engineer. All seams or crevices shall be cleaned out and grouted. All loose and disintegrated rock and thin strata shall be removed. When concrete is to rest on a surface other than rock, special care shall be taken not to disturb the bottom of the excavation, and excavation to final grade shall not be made until just before the concrete or reinforcing is to be placed.

c. The Contractor shall do all bracing, sheathing, or shoring necessary to implement and protect the excavation and the structure as required for safety or conformance to governing laws. The cost of bracing, sheathing, or shoring shall be included in the unit price bid for the structure.

d. Unless otherwise provided, bracing, sheathing, or shoring involved in the construction of this item shall be removed by the Contractor after the completion of the structure. Removal shall be affected in a manner that will not disturb or mar finished masonry. The cost of removal shall be included in the unit price bid for the structure.

e. After each excavation is completed, the Contractor shall notify the Engineer to that effect; and concrete or reinforcing steel shall be placed after the Engineer has approved the depth of the excavation and the character of the foundation material.

751-3.2 BRICK STRUCTURES.

a. Foundations. A prepared foundation shall be placed for all brick structures after the foundation excavation is completed and accepted. Unless otherwise specified, the base shall consist of reinforced concrete mixed, prepared, and placed in accordance with the requirements of Item P-610.

b. Laying Brick. All brick shall be clean and thoroughly wet before laying so that they will

not absorb any appreciable amount of additional water at the time they are laid. All brick shall be laid in freshly made mortar. Mortar that is not used within 45 minutes after water has been added shall be discarded. Retempering of mortar shall not be permitted. An ample layer of mortar shall be spread on the beds and a shallow furrow shall be made in it that can be readily closed by the laying of the brick. All bed and head joints shall be filled solid with mortar. End joints of stretchers and side or cross joints of headers shall be fully buttered with mortar and a shoved joint made to squeeze out mortar at the top of the joint. Any bricks that may be loosened after the mortar has taken its set, shall be removed, cleaned, and relaid with fresh mortar. No broken or chipped brick shall be used in the face, and no spalls or bats shall be used except where necessary to shape around irregular openings or edges; in which case, full bricks shall be placed at ends or corners where possible, and the bats shall be used in the interior of the course. In making closures, no piece of brick shorter than the width of a whole brick shall be used; and wherever practicable, whole brick shall be used and laid as headers.

c. Joints. All joints shall be slushed with mortar at every course, but slushing alone will not be considered adequate for making an acceptable joint. Exterior faces shall be laid up in advance of backing. Exterior faces shall be back plastered or pargeted with a coat of mortar not less than 3/8-inch (9 mm) thick before the backing is laid up. Prior to pargeting, all joints on the back of face courses shall be cut flush. Unless otherwise noted, joints shall be not less than 1/4-inch (6 mm) nor more than 1/2-inch (12 mm) wide and whatever width is adopted shall be maintained uniform throughout the work.

d. Pointing. Face joints shall be neatly struck, using the weather joint. All joints shall be finished properly as the laying of the brick progresses. When nails or line pins are used the holes shall be immediately plugged with mortar and pointed when the nail or pin is removed.

e. Cleaning. Upon completion of the work all exterior surfaces shall be thoroughly cleaned by scrubbing and washing down with water and, if necessary to produce satisfactory results, cleaning shall be done with a 5% solution of muriatic acid which shall then be rinsed off with liberal quantities of clean fresh water.

f. Curing and Cold Weather Protection. In hot or dry weather, or when directed by the Engineer, the brick masonry shall be protected and kept moist for at least 48 hours after laying the brick. Brick masonry work or pointing shall not be done when there is frost in the brick or when the air temperature is below 50 F (10 C) unless the Contractor has on the project ready to use, suitable covering and artificial heating devices necessary to keep the atmosphere surrounding the masonry at a temperature of not less than 60 F (15 C) for the duration of the curing period.

751-3.3 CONCRETE STRUCTURES. Concrete structures shall be built on prepared foundations, conforming to the dimensions and form indicated on the plans. The construction shall conform to the requirements specified in Item P-610. Any reinforcement required shall be placed as indicated on the plans and shall be approved by the Engineer before the concrete is poured.

All invert channels shall be constructed and shaped accurately so as to be smooth, uniform, and cause minimum resistance to flowing water. The interior bottom shall be sloped downward toward the outlet.

751-3.4 PRECAST CONCRETE PIPE STRUCTURES. Precast concrete pipe structures shall be constructed on prepared or previously placed slab foundations and shall conform to the dimensions and locations shown on the plans. All precast concrete pipe sections necessary to build a completed structure shall be furnished. The different sections shall fit together readily, and all jointing and connections shall be cemented with mortar. The top of the upper precast concrete pipe member shall be suitably formed and dimensioned to receive the metal frame and cover or grate, or other cap, as required. Provision shall be made for any connections for lateral pipe, including drops and leads that may be installed in the structure. The flow lines shall be smooth, uniform, and cause minimum resistance to flow. The metal steps that are embedded or built into the side walls shall be aligned and placed at vertical intervals of 12 inches (300 mm). When a metal ladder replaces the steps, it shall be securely fastened into position.

751-3.5 CORRUGATED METAL STRUCTURES. Corrugated metal structures shall be constructed on prepared foundations, conforming to the dimensions and locations as shown on the plans. The structures shall be prefabricated. standard or special fittings shall be furnished to provide pipe connections or branches of correct dimensions. The connections or branches shall be of sufficient length to accommodate connecting bands. The fittings shall be welded in place to the metal structures. When indicated, the structures shall be placed on a reinforced concrete base. The top of the metal structure shall be designed so that either a concrete slab or metal collar may be attached to which can be fastened a standard metal frame and grate or cover. Steps or ladders shall be furnished as shown on the plans.

751-3.6 INLET AND OUTLET PIPES. Inlet and outlet pipes shall extend through the walls of the structures for a sufficient distance beyond the outside surface to allow for connections but shall be cut off flush with the wall on the inside surface, unless otherwise directed. For concrete or brick structures, the mortar shall be placed around these pipes so as to form a tight, neat connection.

751-3.7 PLACEMENT AND TREATMENT OF CASTINGS, FRAMES, AND FITTINGS. All castings, frames, and fittings shall be placed in the positions indicated on the plans or as directed by the Engineer, and shall be set true to line and to correct elevation. If frames or fittings are to be set in concrete or cement mortar, all anchors or bolts shall be in place and position before the concrete or mortar is placed. The unit shall not be disturbed until the mortar or concrete has set.

When frames or fittings are to be placed upon previously constructed masonry, the bearing surface or masonry shall be brought true to line and grade and shall present an even bearing surface in order that the entire face or back of the unit will come in contact with the masonry. The unit shall be set in mortar beds and anchored to the masonry as indicated on the plans or as directed and approved by the Engineer. All units shall set firm and secure.

After the frames or fittings have been set in final position and the concrete or mortar has been allowed to harden for 7 days, then the grates or covers shall be placed and fastened down.

751-3.8 INSTALLATION OF STEPS. The steps shall be installed as indicated on the plans or as directed by the Engineer. When the steps are to be set in concrete, they shall be placed and secured in position before the concrete is poured. When the steps are installed in brick masonry, they shall be placed as the masonry is being built. The steps shall not be disturbed or used until the concrete or mortar has hardened for at least 7 days. After this period has elapsed, the steps shall be cleaned and painted, unless they have been galvanized.

When steps are required with precast concrete pipe structures, they shall be cast into the sides of the pipe at the time the pipe sections are manufactured or set in place after the structure is erected by drilling holes in the concrete and cementing the steps in place.

When steps are required with corrugated metal structures, they shall be welded into aligned position at a vertical spacing of 12 inches (300 mm).

In lieu of steps, prefabricated ladders may be installed. In the case of brick or concrete structures, the ladder shall be held in place by grouting the supports in drilled holes. In the case of metal structures, the ladder shall be secured by welding the top support and grouting the bottom support into drilled holes in the foundation or as directed.

751-3.9 BACKFILLING.

a. After a structure has been completed, the area around it shall be filled with approved material, in horizontal layers not to exceed 8 inches (200 mm) in loose depth, and compacted to the density required in Item P-152. Each layer shall be deposited all around the structure to approximately the same elevation. The top of the fill shall meet the elevation shown on the plans or as directed by the Engineer.

b. Backfilling shall not be placed against any structure until permission is given by the Engineer. In the case of concrete, such permission shall not be given until the concrete has been in place 7 days, or until tests made by the laboratory under supervision of the Engineer establish that the concrete has attained sufficient strength to provide a factor of safety against damage or strain in withstanding any pressure created by the backfill or the methods used in placing it.

c. Backfill shall not be measured for direct payment. Performance of this work shall be considered on obligation of the Contractor covered under the contract unit price for the structure involved.

751-3.10 CLEANING AND RESTORATION OF SITE. After the backfill is completed, the Contractor shall dispose of all surplus material, dirt, and rubbish from the site. Surplus dirt may be deposited in embankments, shoulders, or as ordered by the Engineer. The Contractor shall restore all disturbed areas to their original condition.

After all work is completed, the Contractor shall remove all tools and equipment, leaving the entire site free, clear, and in good condition.

METHOD OF MEASUREMENT

751-4.1 Manholes, catch basins, inlets, and inspection holes shall be measured by the unit.

BASIS OF PAYMENT

751-5.1 The accepted quantities of manholes, catch basins, inlets, and inspection holes will be paid for at the contract unit price per each in place when completed. This price shall be full compensation for furnishing all materials and for all preparation, excavation, backfilling and placing of the materials; furnishing and installation of such specials and connections to pipes and other structures as may be required to complete the item as shown on the plans; and for all labor equipment, tools and incidentals necessary to complete the structure.

Payment will be made under:

Item D-751-5.2	Inlet—per each

MATERIAL REQUIREMENT

ASTM A 27	Steel Castings, Carbon, for General Application
ASTM A 47	Ferritic Malleable Iron Castings
ASTM A 48	Gray Iron Castings
ASTM A 123	Zinc Coating (Hot-Dip) on Iron and Steel Hardware
ASTM A 283	Low and Intermediate Tensile Strength Carbon Steel Plates, Shapes, and Bars
ASTM A 536	Ductile Iron Castings
ASTM A 897	Austempered Ductile Iron Castings
ASTM C 32	Sewer and Manhole Brick (Made from Clay or Shale)
ASTM C 144	Aggregate for Masonry Mortar
ASTM C 150	Portland Cement
ASTM C 478	Precast Reinforced Concrete Manhole Sections

AASHTO M 36	Zinc Coated (Galvanized) Corrugated Iron or Steel Culverts and Underdrains

END ITEM D-751

CLARIFICATIONS TO ITEM T-901: SEEDING

The provisions of this specification shall be applicable except as modified as follows:

901-2.1 SEED. Seeds shall be applied as follows:

Seed	Planting Dates	Minimum Seed Purity (%)	Minimum Seed Germination (%)	Rate of Application (lb. per acre)
Hulled Bermuda	**March-Sept.**	**90**	**85**	**30**
Unhulled Bermua Crimson Clover (1)	**Sept.-Feb.**	**90**	**85**	**20 40**

(1) Inoculated prior to planting with proper bacterial culture.

901-2.2 LIME. Lime will not be utilized on this project.

ITEM T-901: SEEDING

DESCRIPTION

901-1.1 This item shall consist of soil preparation, seeding, fertilizing and mulching the areas shown on the plans or as directed by the Engineer in accordance with these specifications.

MATERIALS

901-2.1 SEED The species and application rates of grass, legume, and cover-crop seed furnished shall be those stipulated herein. Seed shall conform to the requirements of Fed. Spec. JJJ-S-181.

Seed shall be furnished separately or in mixtures in standard containers with the seed name, lot number, net weight, percentages of purity and of germination and hard seed, and percentage of maximum weed seed content clearly marked for each kind of seed. The Contractor shall furnish the Engineer duplicate signed copies of a statement by the vendor certifying that each lot of seed has been tested by a recognized laboratory for seed testing within 6 months of date of delivery. This statement shall include: name and address of laboratory, date of test, lot number for each kind of seed, and the results of tests as to name, percentages of purity and of germination, and percentage of weed content for each kind of seed furnished, and, in case of a mixture, the proportions of each kind of seed.

Seeds shall be applied as follows:

Seed	Minimum Seed Purity (Percent)	Minimum Germination (Percent)	Rate of Application lb./acre (or lb./1,000 S.F.)

See Modification Sheet

Seeding shall be performed during the period between January and December inclusive, unless otherwise approved by the Engineer.

901-2.2 LIME. Lime shall be ground limestone containing not less than 85% of total carbonates, and shall be ground to such fineness that 90% will pass through a No. 20 mesh sieve and 50% will pass through a No. 100 mesh sieve. Coarser material will be acceptable, providing the rates of application are increased to provide not less than the minimum quantities and depth specified in the special provisions on the basis of the two sieve requirements above. Dolomitic lime or a high magnesium lime shall contain at least 10% of magnesium oxide. Lime shall be applied at the rate of [ ]. All liming materials shall conform to the requirements of ASTM C 602.

901-2.3 FERTILIZER. Fertilizer shall be standard commercial fertilizers supplied separately or in mixtures containing the percentages of total nitrogen, available phosphoric acid, and water-soluble potash. They shall be applied at the rate and to the depth specified herein, and shall meet the requirements of Fed. Spec. O-F-241 and applicable state laws. They shall be furnished in standard containers with name, weight, and guaranteed analysis of contents clearly marked thereon. No cyanamide compounds or hydrated lime shall be permitted in mixed fertilizers.

The fertilizers may be supplied in one of the following forms:

a. A dry, free-flowing fertilizer suitable for application by a common fertilizer spreader;

b. A finely-ground fertilizer soluble in water, suitable for application by power sprayers; or

c. A granular or pellet form suitable for application by blower equipment

Fertilizers shall be 8-8-8 commercial fertilizer and shall be spread at the rate of 1000 per acre.

901-2.4 SOIL FOR REPAIRS. The soil for fill and top-soiling of areas to be repaired shall be at least of equal quality to that which exists in areas adjacent to the area to be repaired. The soil shall be relatively free from large stones, roots, stumps, or other materials that will interfere with subsequent sowing of seed, compacting, and establishing turf, and shall be approved by the Engineer before being placed.

CONSTRUCTION METHODS

901-3.1 ADVANCE PREPARATION AND CLEANUP. After grading of areas has bee completed and before applying fertilizer and ground limestone, areas to be seeded shall be raked or otherwise cleared of stones larger than 2 inches (50 mm) in any diameter, sticks, stumps, and other debris which might interfere with sowing of seed, growth of grasses, or subsequent maintenance of grass-covered areas. If any damage by erosion or other causes has occurred after the completion of grading and before beginning the application of fertilizer and ground limestone, the Contractor shall repair such damage. This may include filling gullies, smoothing irregularities, and repairing other incidental damage.

An area to be seeded shall be considered a satisfactory seedbed without additional treatment if it has been recently been thoroughly loosened and worked to a depth of not less than 5 inches (125 mm) as a result of grading operations and, if immediately prior to seeding, the top 3 inches (75 mm) of soil is loose, friable, reasonably free from large clods, rocks, large roots, or other undesirable matter, and if shaped to the required grade.

However, when the area to be seeded is sparsely sodded, weedy, barren and unworked, or packed and hard, any grass and weeds shall first be cut or otherwise satisfactorily disposed

of, and the soil then scarified or otherwise loosened to a depth not less than 5 inches (125 mm). Clods shall

be broken and the top 3 inches (75 mm) of soil shall be worked into a satisfactory seedbed by discing, or by use of cultipackers, rollers, drags, harrows, or other appropriate means.

901-3.2 DRY APPLICATION METHOD.

a. Liming. Lime shall be applied separately and prior to the application of any fertilizer or seed and only on seedbeds. Which have previously been prepared as described above. The lime shall then be worked into the top 3 inches (75 mm) of soil after which the seedbed shall again be properly graded and dressed to a smooth finish.

b. Fertilizing. Following advance preparations and cleanup fertilizer shall be uniformly spread at the rate which will provide not less than the minimum quantity stated in paragraph 901-2.3.

c. Seeding. Grass seed shall be sown at the rate specified in paragraph 901-2.1 immediately after fertilizing, and the fertilizer and see shall be raked within the depth range stated in the special provisions. Seeds of legumes, either alone or in a mixture, shall be inoculated before mixing or sowing, in accordance with the instructions of the manufacturer of the inoculant. When seeding is required at other than the seasons shown on the plans or in the special provisions, a cover crop shall be sown by the same methods required for grass and legume seeding.

d. Rolling. After the seed has been properly covered, the seedbed shall be immediately compacted by means of an approved lawn-roller, weighting 40-65 pounds per food (60-97 kg per meter) of width for clay soil (or any soil having a tendency to pack), and weighting 150-200 pounds per foot (223 to 298 kg per meter) of width for sandy of light soils.

901-3.3 WET APPLICATION METHOD.

a. General. The Contractor may elect to apply seed and fertilizer (and lime, if required) by spraying them on the previously prepared seedbed in the form of an aqueous mixture and by using the methods and equipment described herein. The rates of application shall be as specified in the special provisions.

b. Spraying Equipment. The spraying equipment shall have a container or water tank equipped with a liquid level gauge calibrated to read in increments not larger than 50 gallons (190 liters) over the entire range of the tank capacity, mounted so as to be visible to the nozzle operator. The container or tank shall also be equipped with a mechanical power-driven agitator capable of keeping all the solids in the mixture in complete suspension at all times until used.

The unit shall also be equipped with a pressure pump capable of delivering 100 gallons (380 liters) per minute at a pressure of 100 pounds per square inch (690 kPa). The pump shall be mounted in a line which will re-circulate the mixture through the tank whenever it is not being sprayed form the nozzle. All pump passages and pipe lines shall be capable of providing clearance for 5/8 inch (15 mm) solids. The power unit for the pump and agitator shall have controls mounted so as to be accessible to the nozzle operator. There shall be an indicating pressure gauge connected and mounted immediately at the back of the nozzle.

The nozzle pipe shall be mounted on an elevated supporting stand in such a manner that it can be rotated through 360 degrees horizontally and inclined vertically from at least 20 degrees below to at least 60 degrees above the horizontal. There shall be a quick-acting, three-way control valve connecting the re-circulating line to the nozzle pipe and mounted so that the nozzle operator can control and regulate the amount of flow of mixture delivered to the nozzle. At least three different types of nozzles shall be supplied so that mixtures may be properly sprayed over distance varying from 20 to 100 feed (6 to 30 m). One shall be a close-range ribbon nozzle, one a medium range ribbon nozzle, and one a long-range jet nozzle. For case of removal and cleaning, all nozzles shall be connected to the nozzle pipe by means quick-release couplings.

In order to reach areas inaccessible to the regular equipment, an extension hose at least 50 feet (15 m) in length shall be provided to which the nozzles may be connected.

c. Mixtures. Lime, if required, shall be applied separately, in the quantity specified, prior to the fertilizing and seeding operations. Not more than 220 pounds (100 kg) of lime shall be added to and mixed with each 100 gallons (380 liters) of water. Seed and fertilizer shall be mixed together in the relative proportions specified, but not more than a total of 220 pounds (100 kg) of these combined solids shall be added to and mixed with each 100 gallons (380 liters) of water.

All water used shall be obtained from fresh water sources and shall be free from injurious chemicals and other toxic substances harmful to plant life. Brackish water shall not be used at any time. The Contractor shall identify to the Engineer all sources of water at least 2 weeks prior to use. The Engineer may take samples of the water at the source or from the tank at any time and have a laboratory test the samples for chemical and saline content. The Contractor shall not use any water from any source which is disapproved by the Engineer following such tests.

All mixtures shall be constantly agitated from the time they are mixed until they are finally applied to the seedbed. All such mixtures shall be used within 2 hours from the time they were mixed, or they shall be wasted and disposed of at locations acceptable to the Engineer.

d. Spraying. Lime, if required, shall be sprayed only upon previously prepared seedbeds. After the applied lime mixture has dried, the lime shall be worked into the top 3 inches (8 cm), after which the seedbed shall again be properly graded and dressed to a smooth finish.

Mixtures of seed and fertilizer shall only be sprayed upon previously prepared seedbeds on which the lime, if required, shall already have been worked in. The mixtures shall be applied by means of a high-pressure spray which shall always be directed upward into the air so that the mixtures will fall to the ground like rain in a uniform spray. Nozzles or sprays shall never be directed toward the ground in such a manner as might produce erosion or runoff.

Particular care shall be exercised to ensure that the application is made uniformly and at the prescribed rate and to guard against misses and overlapped areas. Proper predetermined quantities of the mixture in accordance with specifications shall be used to cover specified sections of known area. Checks on the rate and uniformity of application may be made by observing the degree of wetting of the ground or by distributing test sheets of paper or pans over the area at intervals and observing the quantity of material deposited thereon.

Surfaces are to be mulched as indicated by the plans or directed by the Engineer. Seed and fertilizer applied by the spray method need not be raked into the soil or rolled. However, on surfaces on which mulch is not to be used, the raking and rolling operations will be required after the soil has dried.

901-3.4 MAINTENANCE OF SEEDED AREAS. The Contractor shall protect seeded areas against traffic or other use by warning signs or barricades, as approved by the Engineer. Surfaces gullied, or otherwise damaged following seeding shall be repaired by re-grading and reseeding as directed. The Contractor shall mow, water as directed, and otherwise maintain seeded areas in a satisfactory condition until final inspection and acceptance of the work.

When either the dry or wet application method outlined above is used for work done out of season, it will be required that the Contractor establish a good stand of grass of uniform color and density to the satisfaction of the Engineer. If at the time when the contract has been otherwise completed it is not possible to make an adequate determination of the color, density, and uniformity of such stand of grass, payment for the unaccepted portions of the areas seeded out of season will be withheld until such time as these requirements have been met.

METHOD OF MEASUREMENT

901-4.1 The quantity of seeding to be paid for shall be the number of square yards measured on the ground surface, completed and accepted.

BASIS OF PAYMENT

901-5.1 Payment shall be made at the contract unit price per acre or fraction thereof, which price and payment shall be full compensation for furnishing and placing all material and for all labor, equipment, tools, and incidentals necessary to complete the work prescribed in this item.

Payment will be made under:

Item T-901-5.1 Turfing (Seeding, Fertilizing and Mulching)—per square yards

MATERIAL REQUIREMENTS

ASTM D 977	Emulsified Asphalt
Fed. Spec. JJJ-S-181B	Agricultural Seeds
Fed. Spec. O-F-241D	Commercial Mixed Fertilizer

END ITEM T-901

ITEM S001 MOBILIZATION

S001.01 DESCRIPTION. This work consists of preparatory work and operations, including those necessary for movement of personnel, equipment, supplies and incidentals to the project site; the establishment of offices, buildings and other facilities necessary for work on the project; the cost of bonds and any required insurance; and other preconstruction expenses necessary for start of the work, excluding the cost of construction materials.

S001.02 PAYMENT.

Payment will be made under:

Item No.	Pay Item	Pay Unit
S001	Mobilization	Lump Sum

ITEM S003 CONSTRUCTION LAYOUT

The Contractor will be responsible for establishing all lines and grades and staking out all work on this project, including establishing sufficient vertical and horizontal points for utility location. Owner shall provide engineering surveys to establish reference point for construction which in Engineer's judgment are necessary to enable Contractor to proceed with the work. If the Contractors works from intermediate bench marks shown on the plans, he is cautioned against accepting the values shown without checking against the bench mark established by the owner for vertical control on this project.

The Contractor shall employ sufficient qualified engineering personnel experienced in layout to correctly establish and keep complete and comprehensive records of all lines and grades necessary from initial layout to final acceptance. The Contractor will be liable for the accuracy of the initial layout and all subsequent alignment and elevations and shall, at his own expense, rebuild, repair or make good any portion of the work found to be incorrectly position either horizontally or vertically at any time before final acceptance. The Contractor shall notify the Owner's Representative immediately of any apparent errors in the plans.

The Owner's Representative may, at his option, make either spot of complete checks on all construction alignment and grades to determine the correctness of the survey work; however, these checks will not relieve the Contractor of his responsibility for constructing the work in the positions and to the elevations shown on the plans or approved revisions thereto.

Payment will be made under:

Item No.	**Pay Item**	**Pay Unit**
S003	Construction Layout	Lump Sum

END ITEM S003

ITEM S008 PRE-SLOPED CHANNEL DRAIN

PART 1 - GENERAL

1.01 GENERAL

A. All materials and equipment necessary to install a pre-cast, interlocking polyester concrete system as specified and as shown on the working drawings shall be included.

B. Reference Drawings for locations and lengths of nominal 4" Pre-sloped Channel Drain and nominal 12" Pre-sloped Channel Drain.

1.02 RELATED WORK

A. Work specified in other sections includes but is not limited to: Excavation and backfill, cast-in-place concrete, and mechanical equipment.

1.03 SYSTEM DESCRIPTION

A. Presloped trench drain system of pre-cast polymer concrete including interlocking modular components for on-site installation.

1.04 SUBMITTALS

A. Manufacturer will submit, when required, shop drawings showing a schematic plan of the total drainage system listing all parts being provided with exact center-line dimensions suitable for installation. Copies of the manufacturer's recommended method of installation, assembly, and anchorage shall be submitted for review.

1.05 WARRANTY

A. Provide a limited warranty of one year based on installation according to manufacturer's installation instruction data.

PART 2 - PRODUCTS

2.01 PRODUCTS

A. Approved manufacturers include:
   1. ACO Polymer Products, Inc. Chardon Ohio
      a. Product at Track (Nominal internal width 4"): ACO KlassikDrain K100 complete with wearing edge rail, ADA ductile iron gratings secured with boltless locking, in-line drains and catch basins.
   2. Sports Edge, Troutman, North Carolina
      a. Provide product with same dimensional characteristics and grate as indicated in "1".

B. Substitutions: Not permitted.

2.02 PHYSICAL & MECHANICAL CHARACTERISTICS

<u>K100</u>

A. Overall width: 5.12 in.

B. Internal width: 3.94 in.

C. Unit depth: 3.94 in. min to
11.81 in. max

D. Compressive strength of specified polymer concrete – 14,000 psi

E. Flexural strength of specified polymer concrete – 3,000 psi

F. Water absorption rate – not to exceed 0.1 % by weight.

2.03 CHANNEL PROFILE

A. Shall include positive interlocking tongue and groove connections that can be sealed to provide water tight connections. Each pre-cast polymer concrete one meter (39.37") unit shall be an open U-shaped channel with a protected metal edge to accept a locking ductile iron grate.

2.04 GRATES

A. Shall be ADA Compliant factory supplied Black Matte TGIC Polyester Powder Coated Ductile Iron Grate (Black) with locking bar and Grate Removal Tool.
   1. ADA Iron.
   2. QuickLok boltless locking system for K100.

2.05 CATCH BASINS

A. Shall be pre-cast polymer concrete one half meter (19.69") in length and include a trash bucket and removable grating.
   1. 901G (compatible K100)

PART 3 - EXECUTION

3.01 SITE PREPARATION

A. Excavate the area for channel placement wide enough and deep enough to accommodate the channel size and minimum of 4 inch concrete encasement. Channels require a minimum of 4 inches of concrete support on both sides as well as underneath the channel and top of channel must be evenly aligned to the surface of the surrounding slab.

3.02 INSTALLATION

A. Channel sections are installed from the outlet ends of the system, working from the catch basins, insert channels from above to allow ends to interlock. Channel sections shall be placed on brick, rebar basket, low slump concrete grout slurry, or suspended to obtain correct finished elevation. Cutting will be made, if required, by masonry or concrete saw. Temporarily place grate in channel to avoid compression during concrete placement. Protect grated and channel interior during concrete pour.

B. Install in strict accordance with manufacturer's recommendations and drawings.

3.03 FINISHING AND CLEAN-UP

A. Following final set of concrete, remove protection covering the top of channels.

PART 4 – MEASURMENT AND PAYMENT

A. Method Measurement:

Is linear feet, complete with connections and drop inlet sections, in place.

B. Payment will be made under:

Item No. S008 - Pre-sloped Channel Drain - linear feet

END OF SECTION

City of Hattiesburg, MS

200 Forrest St.
P.O. Box 1898
Hattiesburg, MS 39401

Master

File Number: 2018-648

File ID:	2018-648	**Type:**	Regular Agenda Item	**Status:**	Approved
Version:	1	**Reference:**		**In Control:**	City Council
Requester:	Andrew Ellard			**File Created:**	07/30/2018
Brief Title:	CDBG Program Claims			**Final Action:**	
				Minute Book Number:	MB 2018-197

Title:

.Approve and authorize issuance of manual checks for CDBG Program Claims per attached memorandum. {Entitlement CDBG}

Notes:			
		Agenda Date:	08/07/2018
Indexes:		**Agenda Number:**	VII.-14
Sponsors:		**Enactment Date:**	
Attachments:	MEMORANDUM FOR CDBG CLAIMS AUGUST 7, 2018.pdf	**Enactment Number:**	
Contact:		**Meeting Date:**	08/07/2018
Drafter:	Clarence Williams	**Effective Date:**	

History of Legislative File

Version:	Acting Body:	Date:	Action:	Sent To:	Due Date:	Return Date:	Result:
1	City Council	08/07/2018	Approved on the Routine Agenda				
	Action Text:	Approved on the Routine Agenda					

Text of Legislative File 2018-648

Title

.Approve and authorize issuance of manual checks for CDBG Program Claims per attached memorandum. {Entitlement CDBG}

Summary

CDBG Program Claim

Budget Information

Expenditure Type

Purchasing Item

Publication Information

MEMORANDUM

TO: City of Hattiesburg Council Members

FROM: Andrew Ellard, Director
Department of Urban Development

SUBJECT: Authorize issuance of manual checks for CDBG Program Claim.

DATE: August 7, 2018

Recipient:	Hollimon Construction
Activity:	Substantial Rehabilitation
Program:	CDBG
Project Site:	107 Montague Drive
Amount Requested:	**$6,000.00**
Purpose of Request:	Payment Request #4
Work Provided by:	Hollimon Construction

Recipient:	Breakthrough Community Services
Activity:	Interim Assistance
Program:	CDBG
Project Site:	1313 Country Club Road
Amount Requested:	**$478.00**
Purpose of Request:	Payment Request
Work Provided by:	Breakthrough Community Services

Invoice #4

Hollimon Construction

Curtis Hollimon

145 Hinton Drive

Hattiesburg, Ms 39401

601.270.3164

Mary Craft

107 Montague Drive

Hattiesburg, Ms 39401

- Sheet rock has been installed and finished in entire house

Material & Labor: $6,000

Curtis Hollemon
7/27/18

7/27/2018

Breakthrough Community Services, Inc.

"Breaking the Shackles of Poverty through Services"

July 25, 2018

City of Hattiesburg
Department of Federal & State Programs
P. O. Box 1898
Hattiesburg, MS 39403

RE: Reimbursement Request

To Whom It May Concern:

This letter is to request reimbursement for Utility Assistance Program-Interim Assistance. These services include the following:

- Check# 1662 $300.00-Mississippi Power
- Check# 1669 $ 78.99Mississippi Power
- Check# 1675 $100.00-Mississippi Power

The total amount being requested is $478.99. If you have any questions or need additional information, please feel free to contact me at 601-582-3475.

Thank you,

Andrea Howlett

Andrea Howlett
Housing Counselor
Breakthrough Community Services, Inc.

1313 Country Club Road, Hattiesburg, MS 39401 (601) 582-3475 (601) 582-0149 fax www.themtolivechurch.org

"Breaking the Shackles of Poverty Through Services"

INVOICE
REIMBURSEMENT

Breakthrough Community Services, Inc.
1313 Country Club Road
Hattiesburg, MS 39401
P 601-582-3475
F 601-582-0149

BILL TO:
City of Hattiesburg
Department of Federal & State Programs
P. O. Box 1898, Hattiesburg, MS 39401
Phone: 601.545.4558

Project	Invoice	Billing Period
Interim Assistance – Utility Assistance Program		**October 1, 2017 – June 30, 2018**

Quantity	Description	Unit Price	Total
1	**Reimbursement for Utility Assistance Program – Interim Assistance** ***Assisted 2 individuals who met HUD's** limited **clientele definition. These individuals were all below 30-50% of income guideline limits and (1) 62 or older and/or (2) disabled. Proof of income and disability is verified.**	1	478.99
			$ 478.99

Make all checks payable to **Breakthrough Community Services, Inc.**

THANK YOU FOR YOUR BUSINESS!

BREAKTHROUGH COMMUNITY SERVICES, INC.
COUNSELING & EDUCATION ACCOUNT

1662

Vendor: Mississippi Power Company Date: 06/07/2018 Amount: 300.00
For: [redacted] Gwendolyn Harris Residental Depo

INVOICE DATE	INVOICE NUMBER	INVOICE DESCRIPTION	INVOICE AMOUNT	DIST. ACCOUNT	DIST. AMOUNT
06/07/2018	7112073	[redacted] Gwendoly	300.00	050129	300.00

ORIGINAL DOCUMENT PRINTED ON CHEMICAL REACTIVE PAPER WITH MICROPRINTED BORDER

BREAKTHROUGH COMMUNITY SERVICES, INC.
COUNSELING & EDUCATION ACCOUNT
TAX ID #31-1676092
1313 COUNTRY CLUB ROAD
HATTIESBURG, MISSISSIPPI 39401

TRUSTMARK NATIONAL BANK
HATTIESBURG, MISSISSIPPI

85-27/653

1662
NUMBER

DATE 06/07/2018
AMOUNT *********300.00

PAY TO THE ORDER OF

THREE HUNDRED DOLLARS AND NO CENTS

Mississippi Power Company
420 West Pine Street
Hattiesburg MS 39401

For: [redacted]

THIS DOCUMENT CONTAINS HEAT SENSITIVE INK. TOUCH OR PRESS HERE. ALTERED IMAGE DISAPPEARS WITH HEAT

[redacted]

BREAKTHROUGH COMMUNITY SERVICES, INC.
COUNSELING & EDUCATION ACCOUNT

1662

Vendor: Mississippi Power Company Date: 06/07/2018 Amount: 300.00
For: [redacted] Gwendolyn Harris Residental Depo

INVOICE DATE	INVOICE NUMBER	INVOICE DESCRIPTION	INVOICE AMOUNT	DIST. ACCOUNT	DIST. AMOUNT
06/07/2018	7112073	[redacted] Gwendoly	300.00	050129	300.00

BREAKTHROUGH COMMUNITY SERVICES, INC.
COUNSELING & EDUCATION ACCOUNT

1675

Vendor: Mississippi Power Company
For: Earnest Craft [redacted]

Date: 07/23/2018 Amount: 100.00

1675

INVOICE DATE	INVOICE NUMBER	INVOICE DESCRIPTION	INVOICE AMOUNT	DIST. ACCOUNT	DIST. AMOUNT
07/23/2018	7112075	Earnest Craft [redacted]	100.00	050129	100.00

DEIGNIT DOCUMENT PRINTED ON THERMO REACTIVE VOIDS WHEN MOISTENED OR HEATED

BREAKTHROUGH COMMUNITY SERVICES, INC.
COUNSELING & EDUCATION ACCOUNT
TAX ID #31-1676092
1313 COUNTRY CLUB ROAD
HATTIESBURG, MISSISSIPPI 39401

TRUSTMARK NATIONAL BANK
HATTIESBURG, MISSISSIPPI

85-27/653

1675

NUMBER
1675

DATE
07/23/2018

AMOUNT
*********100.00

PAY TO THE ORDER OF

ONE HUNDRED DOLLARS AND NO CENTS

Mississippi Power Company
420 West Pine Street
Hattiesburg MS 39401

For: [redacted]

THIS DOCUMENT CONTAINS HEAT SENSITIVE INK. TOUCH OR PRESS HERE. RETURNING FORMS WILL HEAT.

[redacted]

Date: 07/24/2018
Time: 2:46 PM

Breakthrough Housing Counseling and Education
Account Inquiry -- Transaction Detail

Ref No. :	1669			Date :	06/25/2018
Batch No. :	22	User :	tmekia	Status :	Closed
Source :	CHK - Check			Amount :	$78.99
Explanation :	[redacted]			Posting Date :	06/25/2018
Payee :	Mississippi Power Company (13)			Posting Month :	June
Bank Account :	Breakthrough Counseling and Educati (001)			Posting Year :	2017/2018

Account Code	Account Name	Debit	Credit	Comment	Description	Project
050129	Utility Assistance Program	$78.99	$0.00		[redacted]	

Mississippi Power

Customer Name
EARNEST HENRY CRAFT SR

Account Number
[redacted]

Delinquent After Jun 14, 2018

Total Due $ 78.99

Service Address
107 MONTAGUE DR

Service Period
Apr 26, 2018 - May 30, 2018

Billing Summary

Previous Bill Amount		$ 89.87
Payment Received On 05/03/18	Thank You!	-89.87
Current Electric Service		+78.99
	Total Due	**$ 78.99**

Contact Us

mississippipower.com

Account Number [redacted] Web Access Code

Customer Service
1-800-532-1502
Mon - Fri: 7am - 9pm
Sat: 8am - 5pm
Emergencies: 24hrs/7 days

Power Outage Reporting
1-800-487-3275
24 hrs/7 days

Payment Options

Online Just visit mississippipower.com/mypayment
Login to your account using the following:
Account number: 12481-80002
Web access code: 094497

By Mail
Mississippi Power Payments
PO Box 245
Birmingham, AL 35201-0245

Local Office The Mississippi Power local office for your service address is:
420 West Pine St.
Hattiesburg, MS 39401

For current billing details, turn page over.

Usage Information

Total Used
498 kWh

Next Scheduled Read Date
On or after June 26, 2018

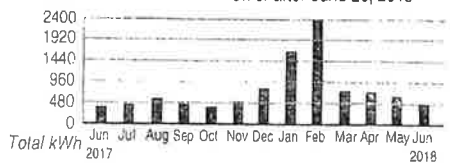

	1 Year Ago	Last Month	This Month
Total kWh Used	378	646	498
Average Daily kWh	14	22	15
Days In Billing Period	28	29	34

You can generate a lot of power with one check. By giving to Project SHARE, you can help meet the energy needs of those less fortunate. Check $1, $2, $5 or $10 on your electric bill and you will be automatically enrolled in Project SHARE beginning next month. For more details please visit mississippipower.com

Enroll in AutoPay and never miss a payment! AutoPay is a free bill payment program where your bill amount is automatically debited from your checking or savings account. We still read your meter and calculate your bill each month. You will receive your bill as normal, but it will include the date when your bank account will be drafted for payment, instead of a "delinquent by" date. Enroll at mississippipower.com/autopay.

12481-80002 06

PLEASE KEEP THIS PORTION FOR YOUR RECORDS.

PLEASE RETURN THIS PORTION WITH YOUR PAYMENT, MAKING SURE THE RETURN ADDRESS SHOWS IN THE ENVELOPE WINDOW.

A[redacted]

Delinquent After Jun 14, 2018

Total Due $ 78.99

Mississippi Power 420 West Pine St. Hattiesburg, MS 39401

☐ Yes, I want to save a stamp on my next payment! Enroll me in paperless billing today. Please verify your email address on the back of this statement.

0412481800023600000078990000000000000000000000000000000

EARNEST HENRY CRAFT SR
107 MONTAGUE DR
HATTIESBURG MS 39401

Mail To:
PO BOX 245
BIRMINGHAM AL
35201-0245

PROJECT SHARE $1 ☐ $2 ☐ $5 ☐ $10 ☐

City of Hattiesburg, MS

200 Forrest St.
P.O. Box 1898
Hattiesburg, MS 39401

Master

File Number: 2018-645

File ID:	2018-645	**Type:**	Regular Agenda Item	**Status:**	Approved
Version:	1	**Reference:**		**In Control:**	City Council
Requester:	Deborah Bourne			**File Created:**	07/27/2018
Brief Title:	Approve the sale of grave spaces			**Final Action:**	
				Minute Book Number:	MB 2018-197

Title:

Approve the sale of grave spaces, per attached Memo's, Receipts and Deeds.

Notes:			
		Agenda Date:	08/07/2018
Indexes:		**Agenda Number:**	VII.-15
Sponsors:		**Enactment Date:**	
Attachments:	Memo's (08-07-18), Receipts(08-07-18), Deeds (08-07-18)	**Enactment Number:**	
Contact:		**Meeting Date:**	08/07/2018
Drafter:		**Effective Date:**	

History of Legislative File

Version:	Acting Body:	Date:	Action:	Sent To:	Due Date:	Return Date:	Result:
1	City Council	08/07/2018	Approved on the Routine Agenda				
	Action Text:	Approved on the Routine Agenda					

Text of Legislative File 2018-645

Title

Approve the sale of grave spaces, per attached Memo's, Receipts and Deeds.

Summary

Approve the sale of grave spaces, per attached Memo's, Receipts and Deeds.

Budget Information

Expenditure Type

Purchasing Item

Publication Information

To: CITY COUNCIL

From: Deborah Bourne, Assistant Division Manager of Cemeteries

Date: July 18, 2018

The following represents the grave spaces sold on July 18, 2018

Marvin Moore, Jr

(1) Space $ 175.00

South Half (S ½) of the Southwest Quarter (SW ¼)

Lot 24, Section 34, Highland Cemetery

Barbara Ann Brock

(2) Spaces $ 350.00

Southwest Quarter (SW ¼)

Lot 132, Section 22, Highland Cemetery

Brian & Tessa Bledsoe

(1) Space $ 175.00

North Half (N ½) of the Southwest Quarter (SW ¼)

Lot 30, Section 37, Highland Cemetery

Brian & Tessa Bledsoe

(2) Spaces $ 350.00

Northwest Quarter (NW ¼)

Lot 30, Section 37, Highland Cemetery

Brian & Tessa Bledsoe

(3) Spaces $ 350.00

Northeast Quarter (NE ¼)

Lot 30, Section 37, Highland Cemetery

To: CITY COUNCIL

From: Deborah Bourne, Assistant Division Manager of Cemeteries

Date: July 23, 2018

The following represents the grave spaces sold on July 23, 2018

Valeria McDougle

(1) Space $ 175.00

South Half (S ½) of the Southeast Quarter (SE ¼)

Lot 46, Section 35, Highland Cemetery

Ronnie Smith

(2) Spaces $ 350.00

Southeast Quarter (SE ¼)

Lot 67, Section 37, Highland Cemetery

Mary Frances Lane

(1) Space $ 175.00

North Half (N ½) of the Southwest Quarter (SW ¼)

Lot 42, Section 37, Highland Cemetery

Ronald Gould

(1) Space $ 175.00

North Half (N ½) of the Southwest Quarter (SW ¼)

Lot 78, Section 37, Highland Cemetery

Steve Gatlin Mary Gatlin joint w/rights of Survivorship

(2) Spaces $350.00

Northeast Quarter (NE ¼)

Lot 47, Section 35, Highland Cemetery

To: CITY COUNCIL

From: Deborah Bourne, Assistant Division Manager of Cemeteries

Date: July 27, 2018

The following represents the grave spaces sold on July 27, 2018

Captoria Page

(1) Space $ 175.00

North Half (N ½) of the Southeast Quarter (SE ¼)

Lot 65, Section 34, Highland Cemetery

Mildred Spinks

(1) Space $ 175.00

North Half (N ½) of the Northwest Quarter (NW ¼)

Lot 71, Section 34, Highland Cemetery

Fred Lee Meggs

(1) Space $ 175.00

North Half (N ½) of the Southwest Quarter (SW ¼)

Lot 42, Section 37, Highland Cemetery

Larry D. & Margaret K. Batman

(2) Spaces $ 350.00

Southeast Quarter (SE ¼)

Lot 18, Section 36, Highland Cemetery

Delores Cobbert

(1) Space $ 150.00

South Half (S ½) of the Northwest Quarter (NW ¼)

Lot 81, Section 2, South Hill Cemetery

CITY OF HATTIESBURG
PURCHASE OF CEMETERY GRAVE SPACES

Hattiesburg, Miss., 07-09 2018

SOLD TO:

Mr.. Mrs. Miss Marvin Moore, Jr

ADDRESS 140 Huntington Dr. Hattiesburg, MS 39401

desires to purchase the grave space described below, subject to Cemetery regulations.

S 1/2 SW 1/4 Lot No. 24 Section No. 34 in Highland Cemetery

Number of grave spaces 1 Price per grave space $ 175.00

Price Received $ 175.00

CIC# 8715

CITY OF HATTIESBURG, MISSISSIPPI

By [signature]
Supt. of City Cemeteries

---

mail to
P.O. Box 735
Petal, MS
39465

CITY OF HATTIESBURG
PURCHASE OF CEMETERY GRAVE SPACES

Hattiesburg, Miss., June 16 2018

SOLD TO:

Mr.. Mrs. Miss Barbara Ann Burch

ADDRESS 805 Hardy Street Hattiesburg, MS 39401

desires to purchase the grave space described below, subject to Cemetery regulations.

— 1/2 SW 1/4 Lot No. 132 Section No. 22 in Highland Cemetery

Number of grave spaces 2 Price per grave space $ 175.00

Price Received $ 350.00

CIC# 3854

CITY OF HATTIESBURG, MISSISSIPPI

By [signature]
Supt. of City Cemeteries

Mail to
461 Bellefower Turn
Hattiesburg MS
39402

CITY OF HATTIESBURG
PURCHASE OF CEMETERY GRAVE SPACES

Hattiesburg, Miss., 6-7-13 2018

SOLD TO:

Mr.. Mrs. Miss Brian & Tessa Bledsoe

ADDRESS 805 Hardy St Hattiesburg, MS 39401

desires to purchase the grave space described below, subject to Cemetery regulations.

N 1/2 SW 1/4 Lot No. 30 Section No. 37 in Highland Cemetery

Number of grave spaces 1 Price per grave space $ 175.00

Price Received $ 175.00

CK # 1188

CITY OF HATTIESBURG, MISSISSIPPI

By [signature]
Supt. of City Cemeteries

Mail to
461 Bellefower Turn
Hattiesburg MS
39402

CITY OF HATTIESBURG
PURCHASE OF CEMETERY GRAVE SPACES

Hattiesburg, Miss., 6-7-13 2018

SOLD TO:

Mr.. Mrs. Miss Brian & Tessa Bledsoe

ADDRESS 805 Hardy St. Hattiesburg, MS 39401

desires to purchase the grave space described below, subject to Cemetery regulations.

— 1/2 NW 1/4 Lot No. 30 Section No. 37 in Highland Cemetery

Number of grave spaces 2 Price per grave space $ 175.00

Price Received $ 350.00

CK # 1188

CITY OF HATTIESBURG, MISSISSIPPI

By [signature]
Supt. of City Cemeteries

Mail to
461 Bellefower Turn
Hattiesburg MS
39402

CITY OF HATTIESBURG
PURCHASE OF CEMETERY GRAVE SPACES

Hattiesburg, Miss., 6-7-13 2018

SOLD TO:

Mr.. Mrs. Miss Brian & Tessa Bledsoe

ADDRESS 805 Hardy St Hattiesburg, MS 39401

desires to purchase the grave space described below, subject to Cemetery regulations.

— 1/2 NE 1/4 Lot No. 30 Section No. 37 in Highland Cemetery

Number of grave spaces 2 Price per grave space $ 175.00

Price Received $ 350.00

CK # 1188

CITY OF HATTIESBURG, MISSISSIPPI

By [signature]
Supt. of City Cemeteries

CITY OF HATTIESBURG
PURCHASE OF CEMETERY GRAVE SPACES

Hattiesburg, Miss., 07-12 2018

SOLD TO:

Mr.. Mrs. Miss Valeria McDougle

ADDRESS 314 E. 4th Street Hattiesburg MS 39401

desires to purchase the grave space described below, subject to Cemetery regulations.

S ½ SE ¼ Lot No. 46 Section No. 35 in Highland Cemetery

Number of grave spaces 1 Price per grave space $ 175.00

Price Received $ 175.00

Cash

CITY OF HATTIESBURG, MISSISSIPPI

By [signature]
Supt. of City Cemeteries

---

mail to:
31 Delk Rd
Hattiesburg MS
39401

CITY OF HATTIESBURG
PURCHASE OF CEMETERY GRAVE SPACES

Hattiesburg, Miss., 07-17 2018

SOLD TO:

Mr.. Mrs. Miss Bonnie Smith

ADDRESS 505 Hardy Street Hattiesburg MS 39401

desires to purchase the grave space described below, subject to Cemetery regulations.

— ½ SE ¼ Lot No. 167 Section No. 37 in Highland Cemetery

Number of grave spaces 2 Price per grave space $ 175.00

Price Received $ 350.00

Cash

CITY OF HATTIESBURG, MISSISSIPPI

By [signature]
Supt. of City Cemeteries

CITY OF HATTIESBURG
PURCHASE OF CEMETERY GRAVE SPACES

Hattiesburg, Miss., 07-19 2018

SOLD TO:

Mr.. Mrs. Miss Mary Frances Lane

ADDRESS 78 Rawls Springs Rd. Hattiesburg MS 39402

desires to purchase the grave space described below, subject to Cemetery regulations.

N ½ SW ¼ Lot No. 42 Section No. 37 in Highland Cemetery

Number of grave spaces 1 Price per grave space $ 175.00

Price Received $ 175.00

Cash

CITY OF HATTIESBURG, MISSISSIPPI

By [signature]

CITY OF HATTIESBURG
PURCHASE OF CEMETERY GRAVE SPACES

Hattiesburg, Miss., 07-19 20 18

SOLD TO:

Mr.. Mrs. Miss Rodney Gould

ADDRESS 710 Hall Ave. Hattiesburg, MS 39401

desires to purchase the grave space described below, subject to Cemetery regulations.

N ½ SW ¼ Lot No. 78 Section No. 37 in Highland Cemetery

Number of grave spaces 1 Price per grave space $ 175.00

Price Received $ 175.00

cash

CITY OF HATTIESBURG, MISSISSIPPI

By [illegible]

Supt. of City Cemeteries

[illegible]
248 Miss Ln
Petal, MS
39465

CITY OF HATTIESBURG
PURCHASE OF CEMETERY GRAVE SPACES

Hattiesburg, Miss., 07-18 20 18

SOLD TO:

Mr.. Mrs. Miss [illegible]

ADDRESS 805 Hardy Street Hattiesburg, MS 39401

desires to purchase the grave space described below, subject to Cemetery regulations.

— ½ NE ¼ Lot No. 47 Section No. 25 in Highland Cemetery

Number of grave spaces 2 Price per grave space $ 175.00

Price Received $ [illegible]

ck #2958

CITY OF HATTIESBURG, MISSISSIPPI

By [illegible]

Supt. of City Cemeteries

CITY OF HATTIESBURG
PURCHASE OF CEMETERY GRAVE SPACES

Hattiesburg, Miss., 07-24 20 18

SOLD TO:

Mr.. Mrs. Miss Captiana Page

ADDRESS 3405 Hillside Drive Hattiesburg, MS 39401

desires to purchase the grave space described below, subject to Cemetery regulations.

N 1/2 SE 1/4 Lot No. 6E Section No. 34 in Highland Cemetery

Number of grave spaces 1 Price per grave space $ 175.00

Price Received $ 175.00

cash

CITY OF HATTIESBURG, MISSISSIPPI

By [signature]
Supt. of City Cemeteries

CITY OF HATTIESBURG
PURCHASE OF CEMETERY GRAVE SPACES

Hattiesburg, Miss. 07-18 20 18

SOLD TO:

Mr.. Mrs. Miss Dundred Spinks

ADDRESS 601 Walnut Street Hattiesburg, MS 39401

desires to purchase the grave space described below, subject to Cemetery regulations.

N 1/2 NW 1/4 Lot No. 71 Section No. 34 in Highland Cemetery

Number of grave spaces 1 Price per grave space $ 175.00

Price Received $ 175.00

cash

CITY OF HATTIESBURG, MISSISSIPPI

By [signature]
Supt. of City Cemeteries

mail to:
423 Short
South Street
Petal, MS 39465

CITY OF HATTIESBURG
PURCHASE OF CEMETERY GRAVE SPACES

Hattiesburg, Miss., 07-26 2018

SOLD TO:

Mr.. Mrs. Miss Fred Lee Meggs

ADDRESS 5752 Hwy 49 S Hattiesburg, MS 39401

desires to purchase the grave space described below, subject to Cemetery regulations.

N ½ SW ¼ Lot No. 42 Section No. 37 in Highland Cemetery

Number of grave spaces 1 Price per grave space $ 175.00

Price Received $ 175.00

CK#5735

CITY OF HATTIESBURG, MISSISSIPPI

By [illegible]
Supt. of City Cemeteries

---

mail to:
[illegible] Lane
Hattiesburg, MS
39402

CITY OF HATTIESBURG
PURCHASE OF CEMETERY GRAVE SPACES

Hattiesburg, Miss., 07-25 2018

SOLD TO:

Mr.. Mrs. Miss Larry D. & Margaret K. Paterno

ADDRESS 3401 West 7th Street Hattiesburg, MS 39401

desires to purchase the grave space described below, subject to Cemetery regulations.

— ½ SE ¼ Lot No. 18 Section No. 36 in Highland Cemetery

Number of grave spaces 2 Price per grave space $ 175.00

Price Received $ 350.00

Cash

CITY OF HATTIESBURG, MISSISSIPPI

By [illegible]
Supt. of City Cemeteries

---

mail to:
2955 Oak St.
Purvis, MS. 39475

CITY OF HATTIESBURG
PURCHASE OF CEMETERY GRAVE SPACES

Hattiesburg, Miss., 07/26/ 2018

SOLD TO:

Mr.. Mrs. Miss Delores Cobbert

ADDRESS 222 Fredna Ave, Hattiesburg, MS. 39401

desires to purchase the grave space described below, subject to Cemetery regulations.

S ½ NW ¼ Lot No. 81 Section No. 2 in South Hill Cemetery

Number of grave spaces 1 Price per grave space $ 150.00

Price Received $ 150.00

Cash

CITY OF HATTIESBURG, MISSISSIPPI

By [illegible]

STATE OF MISSISSIPPI
COUNTY OF FORREST/LAMAR
CITY OF HATTIESBURG
HATTIESBURG, MS

DEED TO CEMETERY LOT
HIGHLAND CEMETERY

For and in consideration of the sum of ONE HUNDRED SEVENTY-FIVE AND NO/100 Dollars ($175.00), cash in hand paid to the City of Hattiesburg, Mississippi, the City of Hattiesburg, Mississippi acting by and through its duly authorized Mayor and City Clerk does hereby bargain, sell and convey unto Marvin Moore, Jr, subject to the reservations and restrictions hereinafter set out and subject to rules and regulations now or hereafter adopted, the following described grave spaces:

South Half (S½) of the Southwest Quarter (SW¼)

Lot 24 Section 34

according to the Cemetery Survey of the City of Hattiesburg, Mississippi known as Highland Cemetery, and containing

One (1) Grave space (s).

SAID Lot shall be used for burial purposes only and all graves therein must be checked and laid out by the Cemetery sexton before the same is dug and must be at least 4 feet deep and shall be, when completed, level with the ground. No shrubbery, vines or trees shall be planted in the Cemetery Lot and there shall be nothing left above the ground except markers which may be erected to meet all City regulations and requirements. All burials in the grave space(s) herein conveyed shall comply with applicable State and Federal laws governing human burial and with City rules and regulations pertaining thereto. If boxes or vaults are used they shall be at least 10 inches below the ground level.

GRANTEE herein shall not sell or convey this lot without a written permit from the Mayor and Council of the City of Hattiesburg, Mississippi.

WITNESS the signature and seal of the City of Hattiesburg, Mississippi, a Municipal Corporation, acting, by and through its duly authorized Mayor and City Clerk, on this, the 7th day of August, 2018.

ATTEST: CITY OF HATTIESBURG, MISSISSIPPI

CITY CLERK MAYOR

(SEAL)

STATE OF MISSISSIPPI
COUNTY OF FORREST/LAMAR

Personally, appeared before me, the undersigned authority in and for said County and State, Toby Barker and Kermas Eaton, Mayor and City Clerk, respectively, of the City of Hattiesburg, Mississippi, a municipal corporation, each of whom acknowledged before me that they signed, executed and delivered the above and foregoing Cemetery Deed on the day and year therein mentioned as the act and deed of the City of Hattiesburg after having first been authorized so to do.

Given under my hand and official seal of office on this, the 7th day of August, 2018.

My Commission Expires:

NOTARY PUBLIC

STATE OF MISSISSIPPI
COUNTY OF FORREST/LAMAR
CITY OF HATTIESBURG
HATTIESBURG, MS

DEED TO CEMETERY LOT
HIGHLAND CEMETERY

For and in consideration of the sum of THREE HUNDRED FIFTY AND NO/100 Dollars ($350.00), cash in hand paid to the City of Hattiesburg, Mississippi, the City of Hattiesburg, Mississippi acting by and through its duly authorized Mayor and City Clerk does hereby bargain, sell and convey unto, Barbara Ann Brock, subject to the reservations and restrictions hereinafter set out and subject to rules and regulations now or hereafter adopted, the following described grave spaces:

Southwest Quarter (SW¼)

Lot Number 132 Section Number 22

according to the Cemetery Survey of the City of Hattiesburg, Mississippi known as Highland Cemetery, and containing

Two Grave space (s).

SAID Lot shall be used for burial purposes only and all graves therein must be checked and laid out by the Cemetery sexton before the same is dug and must be at least 4 feet deep and shall be, when completed, level with the ground. No shrubbery, vines or trees shall be planted in the Cemetery Lot and there shall be nothing left above the ground except markers which may be erected to meet all City regulations and requirements. All burials in the grave space(s) herein conveyed shall comply with applicable State and Federal laws governing human burial and with City rules and regulations pertaining thereto. If boxes or vaults are used they shall be at least 10 inches below the ground level.

GRANTEE herein shall not sell or convey this lot without a written permit from the Mayor and Council of the City of Hattiesburg, Mississippi.

WITNESS the signature and seal of the City of Hattiesburg, Mississippi, a Municipal Corporation, acting, by and through its duly authorized Mayor and City Clerk, on this, the 7th day August 2018.

ATTEST: CITY OF HATTIESBURG, MISSISSIPPI

_____ _____
CITY CLERK MAYOR

(S E A L)

STATE OF MISSISSIPPI
COUNTY OF FORREST/LAMAR

Personally appeared before me, the undersigned authority in and for said County and State, Toby Barker and Kermas Eaton, Mayor and City Clerk, respectively, of the City of Hattiesburg, Mississippi, a municipal corporation, each of whom acknowledged before me that they signed, executed and delivered the above and foregoing Cemetery Deed on the day and year therein mentioned as the act and deed of the City of Hattiesburg after having first been authorized so to do.

Given under my hand and official seal of office on this, the 7thday of August, 2018

My Commission Expires: _____
NOTARY PUBLIC

_____

STATE OF MISSISSIPPI
COUNTY OF FORREST/LAMAR
CITY OF HATTIESBURG
HATTIESBURG, MS

DEED TO CEMETERY LOT
HIGHLAND CEMETERY

For and in consideration of the sum of ONE HUNDRED SEVENTY-FIVE AND NO/100 Dollars ($175.00), cash in hand paid to the City of Hattiesburg, Mississippi, the City of Hattiesburg, Mississippi acting by and through its duly authorized Mayor and City Clerk does hereby bargain, sell and convey unto Brian & Tessa Bledsoe, subject to the reservations and restrictions hereinafter set out and subject to rules and regulations now or hereafter adopted, the following described grave spaces:

North Half (N½) of the Southwest Quarter (SW¼)

Lot 30 Section 37

according to the Cemetery Survey of the City of Hattiesburg, Mississippi known as Highland Cemetery, and containing

One (1) Grave space (s).

SAID Lot shall be used for burial purposes only and all graves therein must be checked and laid out by the Cemetery sexton before the same is dug and must be at least 4 feet deep and shall be, when completed, level with the ground. No shrubbery, vines or trees shall be planted in the Cemetery Lot and there shall be nothing left above the ground except markers which may be erected to meet all City regulations and requirements. All burials in the grave space(s) herein conveyed shall comply with applicable State and Federal laws governing human burial and with City rules and regulations pertaining thereto. If boxes or vaults are used they shall be at least 10 inches below the ground level.

GRANTEE herein shall not sell or convey this lot without a written permit from the Mayor and Council of the City of Hattiesburg, Mississippi.

WITNESS the signature and seal of the City of Hattiesburg, Mississippi, a Municipal Corporation, acting, by and through its duly authorized Mayor and City Clerk, on this, the 7th day of August, 2018.

ATTEST: CITY OF HATTIESBURG, MISSISSIPPI

CITY CLERK MAYOR

(SEAL)

STATE OF MISSISSIPPI
COUNTY OF FORREST/LAMAR

Personally, appeared before me, the undersigned authority in and for said County and State, Toby Barker and Kermas Eaton, Mayor and City Clerk, respectively, of the City of Hattiesburg, Mississippi, a municipal corporation, each of whom acknowledged before me that they signed, executed and delivered the above and foregoing Cemetery Deed on the day and year therein mentioned as the act and deed of the City of Hattiesburg after having first been authorized so to do.

Given under my hand and official seal of office on this, the 7th day of August, 2018.

My Commission Expires:

NOTARY PUBLIC

STATE OF MISSISSIPPI
COUNTY OF FORREST/LAMAR
CITY OF HATTIESBURG
HATTIESBURG, MS

DEED TO CEMETERY LOT
HIGHLAND CEMETERY

For and in consideration of the sum of THREE HUNDRED FIFTY AND NO/100 Dollars ($350.00), cash in hand paid to the City of Hattiesburg, Mississippi, the City of Hattiesburg, Mississippi acting by and through its duly authorized Mayor and City Clerk does hereby bargain, sell and convey unto, Brian & Tessa Bledsoe, subject to the reservations and restrictions hereinafter set out and subject to rules and regulations now or hereafter adopted, the following described grave spaces:

Northwest Quarter (NW¼)

Lot Number 30 Section Number 37

according to the Cemetery Survey of the City of Hattiesburg, Mississippi known as Highland Cemetery, and containing

Two Grave space (s).

SAID Lot shall be used for burial purposes only and all graves therein must be checked and laid out by the Cemetery sexton before the same is dug and must be at least 4 feet deep and shall be, when completed, level with the ground. No shrubbery, vines or trees shall be planted in the Cemetery Lot and there shall be nothing left above the ground except markers which may be erected to meet all City regulations and requirements. All burials in the grave space(s) herein conveyed shall comply with applicable State and Federal laws governing human burial and with City rules and regulations pertaining thereto. If boxes or vaults are used they shall be at least 10 inches below the ground level.

GRANTEE herein shall not sell or convey this lot without a written permit from the Mayor and Council of the City of Hattiesburg, Mississippi.

WITNESS the signature and seal of the City of Hattiesburg, Mississippi, a Municipal Corporation, acting, by and through its duly authorized Mayor and City Clerk, on this, the 7th day August 2018.

ATTEST: CITY OF HATTIESBURG, MISSISSIPPI

_____ _____
CITY CLERK MAYOR

(S E A L)

STATE OF MISSISSIPPI
COUNTY OF FORREST/LAMAR

Personally appeared before me, the undersigned authority in and for said County and State, Toby Barker and Kermas Eaton, Mayor and City Clerk, respectively, of the City of Hattiesburg, Mississippi, a municipal corporation, each of whom acknowledged before me that they signed, executed and delivered the above and foregoing Cemetery Deed on the day and year therein mentioned as the act and deed of the City of Hattiesburg after having first been authorized so to do.

Given under my hand and official seal of office on this, the 7thday of August, 2018

My Commission Expires:

_____
NOTARY PUBLIC

_____

STATE OF MISSISSIPPI
COUNTY OF FORREST/LAMAR
CITY OF HATTIESBURG
HATTIESBURG, MS

DEED TO CEMETERY LOT
HIGHLAND CEMETERY

For and in consideration of the sum of THREE HUNDRED FIFTY AND NO/100 Dollars ($350.00), cash in hand paid to the City of Hattiesburg, Mississippi, the City of Hattiesburg, Mississippi acting by and through its duly authorized Mayor and City Clerk does hereby bargain, sell and convey unto, Brian & Tessa Bledsoe, subject to the reservations and restrictions hereinafter set out and subject to rules and regulations now or hereafter adopted, the following described grave spaces:

Northeast Quarter (NE¼)

Lot Number 30 Section Number 37

according to the Cemetery Survey of the City of Hattiesburg, Mississippi known as Highland Cemetery, and containing

Two Grave space (s).

SAID Lot shall be used for burial purposes only and all graves therein must be checked and laid out by the Cemetery sexton before the same is dug and must be at least 4 feet deep and shall be, when completed, level with the ground. No shrubbery, vines or trees shall be planted in the Cemetery Lot and there shall be nothing left above the ground except markers which may be erected to meet all City regulations and requirements. All burials in the grave space(s) herein conveyed shall comply with applicable State and Federal laws governing human burial and with City rules and regulations pertaining thereto. If boxes or vaults are used they shall be at least 10 inches below the ground level.

GRANTEE herein shall not sell or convey this lot without a written permit from the Mayor and Council of the City of Hattiesburg, Mississippi.

WITNESS the signature and seal of the City of Hattiesburg, Mississippi, a Municipal Corporation, acting, by and through its duly authorized Mayor and City Clerk, on this, the 7th day August 2018.

ATTEST: CITY OF HATTIESBURG, MISSISSIPPI

_____ _____
CITY CLERK MAYOR

(S E A L)

STATE OF MISSISSIPPI
COUNTY OF FORREST/LAMAR

Personally appeared before me, the undersigned authority in and for said County and State, Toby Barker and Kermas Eaton, Mayor and City Clerk, respectively, of the City of Hattiesburg, Mississippi, a municipal corporation, each of whom acknowledged before me that they signed, executed and delivered the above and foregoing Cemetery Deed on the day and year therein mentioned as the act and deed of the City of Hattiesburg after having first been authorized so to do.

Given under my hand and official seal of office on this, the 7thday of August, 2018

My Commission Expires: _____
NOTARY PUBLIC

_____

STATE OF MISSISSIPPI
COUNTY OF FORREST/LAMAR
CITY OF HATTIESBURG
HATTIESBURG, MS

DEED TO CEMETERY LOT
HIGHLAND CEMETERY

For and in consideration of the sum of ONE HUNDRED SEVENTY-FIVE AND NO/100 Dollars ($175.00), cash in hand paid to the City of Hattiesburg, Mississippi, the City of Hattiesburg, Mississippi acting by and through its duly authorized Mayor and City Clerk does hereby bargain, sell and convey unto Valeria McDougle, subject to the reservations and restrictions hereinafter set out and subject to rules and regulations now or hereafter adopted, the following described grave spaces:

South Half (S½) of the Southeast Quarter (SE¼)

Lot 46 Section 35

according to the Cemetery Survey of the City of Hattiesburg, Mississippi known as Highland Cemetery, and containing

One (1) Grave space (s).

SAID Lot shall be used for burial purposes only and all graves therein must be checked and laid out by the Cemetery sexton before the same is dug and must be at least 4 feet deep and shall be, when completed, level with the ground. No shrubbery, vines or trees shall be planted in the Cemetery Lot and there shall be nothing left above the ground except markers which may be erected to meet all City regulations and requirements. All burials in the grave space(s) herein conveyed shall comply with applicable State and Federal laws governing human burial and with City rules and regulations pertaining thereto. If boxes or vaults are used they shall be at least 10 inches below the ground level.

GRANTEE herein shall not sell or convey this lot without a written permit from the Mayor and Council of the City of Hattiesburg, Mississippi.

WITNESS the signature and seal of the City of Hattiesburg, Mississippi, a Municipal Corporation, acting, by and through its duly authorized Mayor and City Clerk, on this, the 7th day of August, 2018.

ATTEST: CITY OF HATTIESBURG, MISSISSIPPI

CITY CLERK MAYOR

(S E A L)

STATE OF MISSISSIPPI
COUNTY OF FORREST/LAMAR

Personally, appeared before me, the undersigned authority in and for said County and State, Toby Barker and Kermas Eaton, Mayor and City Clerk, respectively, of the City of Hattiesburg, Mississippi, a municipal corporation, each of whom acknowledged before me that they signed, executed and delivered the above and foregoing Cemetery Deed on the day and year therein mentioned as the act and deed of the City of Hattiesburg after having first been authorized so to do.

Given under my hand and official seal of office on this, the 7th day of August, 2018.

My Commission Expires:

NOTARY PUBLIC

STATE OF MISSISSIPPI
COUNTY OF FORREST/LAMAR
CITY OF HATTIESBURG
HATTIESBURG, MS

DEED TO CEMETERY LOT
HIGHLAND CEMETERY

For and in consideration of the sum of THREE HUNDRED FIFTY AND NO/100 Dollars ($350.00), cash in hand paid to the City of Hattiesburg, Mississippi, the City of Hattiesburg, Mississippi acting by and through its duly authorized Mayor and City Clerk does hereby bargain, sell and convey unto, Ronnie Smith, subject to the reservations and restrictions hereinafter set out and subject to rules and regulations now or hereafter adopted, the following described grave spaces:

Southeast Quarter (SE¼)

Lot Number 67 Section Number 37

according to the Cemetery Survey of the City of Hattiesburg, Mississippi known as Highland Cemetery, and containing

Two Grave space (s).

SAID Lot shall be used for burial purposes only and all graves therein must be checked and laid out by the Cemetery sexton before the same is dug and must be at least 4 feet deep and shall be, when completed, level with the ground. No shrubbery, vines or trees shall be planted in the Cemetery Lot and there shall be nothing left above the ground except markers which may be erected to meet all City regulations and requirements. All burials in the grave space(s) herein conveyed shall comply with applicable State and Federal laws governing human burial and with City rules and regulations pertaining thereto. If boxes or vaults are used they shall be at least 10 inches below the ground level.

GRANTEE herein shall not sell or convey this lot without a written permit from the Mayor and Council of the City of Hattiesburg, Mississippi.

WITNESS the signature and seal of the City of Hattiesburg, Mississippi, a Municipal Corporation, acting, by and through its duly authorized Mayor and City Clerk, on this, the 7th day August 2018.

ATTEST: CITY OF HATTIESBURG, MISSISSIPPI

_____ _____
CITY CLERK MAYOR

(S E A L)

STATE OF MISSISSIPPI
COUNTY OF FORREST/LAMAR

Personally appeared before me, the undersigned authority in and for said County and State, Toby Barker and Kermas Eaton, Mayor and City Clerk, respectively, of the City of Hattiesburg, Mississippi, a municipal corporation, each of whom acknowledged before me that they signed, executed and delivered the above and foregoing Cemetery Deed on the day and year therein mentioned as the act and deed of the City of Hattiesburg after having first been authorized so to do.

Given under my hand and official seal of office on this, the 7thday of August, 2018

My Commission Expires: _____
NOTARY PUBLIC

_____

STATE OF MISSISSIPPI
COUNTY OF FORREST/LAMAR
CITY OF HATTIESBURG
HATTIESBURG, MS

DEED TO CEMETERY LOT
HIGHLAND CEMETERY

For and in consideration of the sum of ONE HUNDRED SEVENTY-FIVE AND NO/100 Dollars ($175.00), cash in hand paid to the City of Hattiesburg, Mississippi, the City of Hattiesburg, Mississippi acting by and through its duly authorized Mayor and City Clerk does hereby bargain, sell and convey unto Mary Frances Lane, subject to the reservations and restrictions hereinafter set out and subject to rules and regulations now or hereafter adopted, the following described grave spaces:

North Half (N½) of the Southwest Quarter (SW¼)

Lot 42 Section 37

according to the Cemetery Survey of the City of Hattiesburg, Mississippi known as Highland Cemetery, and containing

One (1) Grave space (s).

SAID Lot shall be used for burial purposes only and all graves therein must be checked and laid out by the Cemetery sexton before the same is dug and must be at least 4 feet deep and shall be, when completed, level with the ground. No shrubbery, vines or trees shall be planted in the Cemetery Lot and there shall be nothing left above the ground except markers which may be erected to meet all City regulations and requirements. All burials in the grave space(s) herein conveyed shall comply with applicable State and Federal laws governing human burial and with City rules and regulations pertaining thereto. If boxes or vaults are used they shall be at least 10 inches below the ground level.

GRANTEE herein shall not sell or convey this lot without a written permit from the Mayor and Council of the City of Hattiesburg, Mississippi.

WITNESS the signature and seal of the City of Hattiesburg, Mississippi, a Municipal Corporation, acting, by and through its duly authorized Mayor and City Clerk, on this, the 7th day of August, 2018.

ATTEST: CITY OF HATTIESBURG, MISSISSIPPI

CITY CLERK MAYOR

(S E A L)

STATE OF MISSISSIPPI
COUNTY OF FORREST/LAMAR

Personally, appeared before me, the undersigned authority in and for said County and State, Toby Barker and Kermas Eaton, Mayor and City Clerk, respectively, of the City of Hattiesburg, Mississippi, a municipal corporation, each of whom acknowledged before me that they signed, executed and delivered the above and foregoing Cemetery Deed on the day and year therein mentioned as the act and deed of the City of Hattiesburg after having first been authorized so to do.

Given under my hand and official seal of office on this, the 7th day of August, 2018.

My Commission Expires:

NOTARY PUBLIC

STATE OF MISSISSIPPI
COUNTY OF FORREST/LAMAR
CITY OF HATTIESBURG
HATTIESBURG, MS

DEED TO CEMETERY LOT
HIGHLAND CEMETERY

For and in consideration of the sum of ONE HUNDRED SEVENTY-FIVE AND NO/100 Dollars ($175.00), cash in hand paid to the City of Hattiesburg, Mississippi, the City of Hattiesburg, Mississippi acting by and through its duly authorized Mayor and City Clerk does hereby bargain, sell and convey unto Rodney Gould, subject to the reservations and restrictions hereinafter set out and subject to rules and regulations now or hereafter adopted, the following described grave spaces:

North Half (N½) of the Southwest Quarter (SW¼)

Lot 78 Section 37

according to the Cemetery Survey of the City of Hattiesburg, Mississippi known as Highland Cemetery, and containing

One (1) Grave space (s).

SAID Lot shall be used for burial purposes only and all graves therein must be checked and laid out by the Cemetery sexton before the same is dug and must be at least 4 feet deep and shall be, when completed, level with the ground. No shrubbery, vines or trees shall be planted in the Cemetery Lot and there shall be nothing left above the ground except markers which may be erected to meet all City regulations and requirements. All burials in the grave space(s) herein conveyed shall comply with applicable State and Federal laws governing human burial and with City rules and regulations pertaining thereto. If boxes or vaults are used they shall be at least 10 inches below the ground level.

GRANTEE herein shall not sell or convey this lot without a written permit from the Mayor and Council of the City of Hattiesburg, Mississippi.

WITNESS the signature and seal of the City of Hattiesburg, Mississippi, a Municipal Corporation, acting, by and through its duly authorized Mayor and City Clerk, on this, the 7th day of August, 2018.

ATTEST: CITY OF HATTIESBURG, MISSISSIPPI

CITY CLERK MAYOR

(SEAL)

STATE OF MISSISSIPPI
COUNTY OF FORREST/LAMAR

Personally, appeared before me, the undersigned authority in and for said County and State, Toby Barker and Kermas Eaton, Mayor and City Clerk, respectively, of the City of Hattiesburg, Mississippi, a municipal corporation, each of whom acknowledged before me that they signed, executed and delivered the above and foregoing Cemetery Deed on the day and year therein mentioned as the act and deed of the City of Hattiesburg after having first been authorized so to do.

Given under my hand and official seal of office on this, the 7th day of August, 2018.

My Commission Expires: NOTARY PUBLIC

STATE OF MISSISSIPPI
COUNTY OF FORREST/LAMAR
CITY OF HATTIESBURG
HATTIESBURG, MS

DEED TO CEMETERY LOT
HIGHLAND CEMETERY

For and in consideration of the sum of THREE HUNDRED FIFTY AND NO/100 Dollars ($350.00), cash in hand paid to the City of Hattiesburg, Mississippi, the City of Hattiesburg, Mississippi acting by and through its duly authorized Mayor and City Clerk does hereby bargain, sell and convey unto, Steve Gatlin Mary Gatlin Joint w/Rights of Survivorship , subject to the reservations and restrictions hereinafter set out and subject to rules and regulations now or hereafter adopted, the following described grave spaces:

Northeast Quarter (NE¼)

Lot Number 47 Section Number 35

according to the Cemetery Survey of the City of Hattiesburg, Mississippi known as Highland Cemetery, and containing

Two Grave space (s).

SAID Lot shall be used for burial purposes only and all graves therein must be checked and laid out by the Cemetery sexton before the same is dug and must be at least 4 feet deep and shall be, when completed, level with the ground. No shrubbery, vines or trees shall be planted in the Cemetery Lot and there shall be nothing left above the ground except markers which may be erected to meet all City regulations and requirements. All burials in the grave space(s) herein conveyed shall comply with applicable State and Federal laws governing human burial and with City rules and regulations pertaining thereto. If boxes or vaults are used they shall be at least 10 inches below the ground level.

GRANTEE herein shall not sell or convey this lot without a written permit from the Mayor and Council of the City of Hattiesburg, Mississippi.

WITNESS the signature and seal of the City of Hattiesburg, Mississippi, a Municipal Corporation, acting, by and through its duly authorized Mayor and City Clerk, on this, the 7th day August 2018.

ATTEST: CITY OF HATTIESBURG, MISSISSIPPI

_____ _____
CITY CLERK MAYOR

(S E A L)

STATE OF MISSISSIPPI
COUNTY OF FORREST/LAMAR

Personally appeared before me, the undersigned authority in and for said County and State, Toby Barker and Kermas Eaton, Mayor and City Clerk, respectively, of the City of Hattiesburg, Mississippi, a municipal corporation, each of whom acknowledged before me that they signed, executed and delivered the above and foregoing Cemetery Deed on the day and year therein mentioned as the act and deed of the City of Hattiesburg after having first been authorized so to do.

Given under my hand and official seal of office on this, the 7thday of August, 2018

My Commission Expires: _____
NOTARY PUBLIC

_____

STATE OF MISSISSIPPI
COUNTY OF FORREST/LAMAR
CITY OF HATTIESBURG
HATTIESBURG, MS

DEED TO CEMETERY LOT
HIGHLAND CEMETERY

For and in consideration of the sum of ONE HUNDRED SEVENTY-FIVE AND NO/100 Dollars ($175.00), cash in hand paid to the City of Hattiesburg, Mississippi, the City of Hattiesburg, Mississippi acting by and through its duly authorized Mayor and City Clerk does hereby bargain, sell and convey unto Captoria Page, subject to the reservations and restrictions hereinafter set out and subject to rules and regulations now or hereafter adopted, the following described grave spaces:

North Half (N½) of the Southeast Quarter (SE¼)

Lot 65 Section 34

according to the Cemetery Survey of the City of Hattiesburg, Mississippi known as Highland Cemetery, and containing

One (1) Grave space (s).

SAID Lot shall be used for burial purposes only and all graves therein must be checked and laid out by the Cemetery sexton before the same is dug and must be at least 4 feet deep and shall be, when completed, level with the ground. No shrubbery, vines or trees shall be planted in the Cemetery Lot and there shall be nothing left above the ground except markers which may be erected to meet all City regulations and requirements. All burials in the grave space(s) herein conveyed shall comply with applicable State and Federal laws governing human burial and with City rules and regulations pertaining thereto. If boxes or vaults are used they shall be at least 10 inches below the ground level.

GRANTEE herein shall not sell or convey this lot without a written permit from the Mayor and Council of the City of Hattiesburg, Mississippi.

WITNESS the signature and seal of the City of Hattiesburg, Mississippi, a Municipal Corporation, acting, by and through its duly authorized Mayor and City Clerk, on this, the 7th day of August, 2018.

ATTEST: CITY OF HATTIESBURG, MISSISSIPPI

CITY CLERK MAYOR

(S E A L)

STATE OF MISSISSIPPI
COUNTY OF FORREST/LAMAR

Personally, appeared before me, the undersigned authority in and for said County and State, Toby Barker and Kermas Eaton, Mayor and City Clerk, respectively, of the City of Hattiesburg, Mississippi, a municipal corporation, each of whom acknowledged before me that they signed, executed and delivered the above and foregoing Cemetery Deed on the day and year therein mentioned as the act and deed of the City of Hattiesburg after having first been authorized so to do.

Given under my hand and official seal of office on this, the 7th day of August, 2018.

My Commission Expires:

NOTARY PUBLIC

STATE OF MISSISSIPPI
COUNTY OF FORREST/LAMAR
CITY OF HATTIESBURG
HATTIESBURG, MS

DEED TO CEMETERY LOT
HIGHLAND CEMETERY

For and in consideration of the sum of ONE HUNDRED SEVENTY-FIVE AND NO/100 Dollars ($175.00), cash in hand paid to the City of Hattiesburg, Mississippi, the City of Hattiesburg, Mississippi acting by and through its duly authorized Mayor and City Clerk does hereby bargain, sell and convey unto Mildred Spinks, subject to the reservations and restrictions hereinafter set out and subject to rules and regulations now or hereafter adopted, the following described grave spaces:

North Half (N½) of the Northwest Quarter (NW¼)

Lot 71 Section 34

according to the Cemetery Survey of the City of Hattiesburg, Mississippi known as Highland Cemetery, and containing

One (1) Grave space (s).

SAID Lot shall be used for burial purposes only and all graves therein must be checked and laid out by the Cemetery sexton before the same is dug and must be at least 4 feet deep and shall be, when completed, level with the ground. No shrubbery, vines or trees shall be planted in the Cemetery Lot and there shall be nothing left above the ground except markers which may be erected to meet all City regulations and requirements. All burials in the grave space(s) herein conveyed shall comply with applicable State and Federal laws governing human burial and with City rules and regulations pertaining thereto. If boxes or vaults are used they shall be at least 10 inches below the ground level.

GRANTEE herein shall not sell or convey this lot without a written permit from the Mayor and Council of the City of Hattiesburg, Mississippi.

WITNESS the signature and seal of the City of Hattiesburg, Mississippi, a Municipal Corporation, acting, by and through its duly authorized Mayor and City Clerk, on this, the 7th day of August, 2018.

ATTEST: CITY OF HATTIESBURG, MISSISSIPPI

_____ _____

CITY CLERK MAYOR

(S E A L)

STATE OF MISSISSIPPI
COUNTY OF FORREST/LAMAR

Personally, appeared before me, the undersigned authority in and for said County and State, Toby Barker and Kermas Eaton, Mayor and City Clerk, respectively, of the City of Hattiesburg, Mississippi, a municipal corporation, each of whom acknowledged before me that they signed, executed and delivered the above and foregoing Cemetery Deed on the day and year therein mentioned as the act and deed of the City of Hattiesburg after having first been authorized so to do.

Given under my hand and official seal of office on this, the 7th day of August, 2018.

My Commission Expires: _____

NOTARY PUBLIC

_____

STATE OF MISSISSIPPI
COUNTY OF FORREST/LAMAR
CITY OF HATTIESBURG
HATTIESBURG, MS

DEED TO CEMETERY LOT
HIGHLAND CEMETERY

For and in consideration of the sum of ONE HUNDRED SEVENTY-FIVE AND NO/100 Dollars ($175.00), cash in hand paid to the City of Hattiesburg, Mississippi, the City of Hattiesburg, Mississippi acting by and through its duly authorized Mayor and City Clerk does hereby bargain, sell and convey unto Fred Lee Meggs, subject to the reservations and restrictions hereinafter set out and subject to rules and regulations now or hereafter adopted, the following described grave spaces:

North Half (N½) of the Southwest Quarter (SW¼)

Lot 42 Section 37

according to the Cemetery Survey of the City of Hattiesburg, Mississippi known as Highland Cemetery, and containing

One (1) Grave space (s).

SAID Lot shall be used for burial purposes only and all graves therein must be checked and laid out by the Cemetery sexton before the same is dug and must be at least 4 feet deep and shall be, when completed, level with the ground. No shrubbery, vines or trees shall be planted in the Cemetery Lot and there shall be nothing left above the ground except markers which may be erected to meet all City regulations and requirements. All burials in the grave space(s) herein conveyed shall comply with applicable State and Federal laws governing human burial and with City rules and regulations pertaining thereto. If boxes or vaults are used they shall be at least 10 inches below the ground level.

GRANTEE herein shall not sell or convey this lot without a written permit from the Mayor and Council of the City of Hattiesburg, Mississippi.

WITNESS the signature and seal of the City of Hattiesburg, Mississippi, a Municipal Corporation, acting, by and through its duly authorized Mayor and City Clerk, on this, the 7th day of August, 2018.

ATTEST: CITY OF HATTIESBURG, MISSISSIPPI

CITY CLERK MAYOR

(S E A L)

STATE OF MISSISSIPPI
COUNTY OF FORREST/LAMAR

Personally, appeared before me, the undersigned authority in and for said County and State, Toby Barker and Kermas Eaton, Mayor and City Clerk, respectively, of the City of Hattiesburg, Mississippi, a municipal corporation, each of whom acknowledged before me that they signed, executed and delivered the above and foregoing Cemetery Deed on the day and year therein mentioned as the act and deed of the City of Hattiesburg after having first been authorized so to do.

Given under my hand and official seal of office on this, the 7th day of August, 2018.

My Commission Expires:

NOTARY PUBLIC

STATE OF MISSISSIPPI
COUNTY OF FORREST/LAMAR
CITY OF HATTIESBURG
HATTIESBURG, MS

DEED TO CEMETERY LOT
HIGHLAND CEMETERY

For and in consideration of the sum of THREE HUNDRED FIFTY AND NO/100 Dollars ($350.00), cash in hand paid to the City of Hattiesburg, Mississippi, the City of Hattiesburg, Mississippi acting by and through its duly authorized Mayor and City Clerk does hereby bargain, sell and convey unto, Larry D. & Margaret K. Bateman, subject to the reservations and restrictions hereinafter set out and subject to rules and regulations now or hereafter adopted, the following described grave spaces:

Southeast Quarter (SE¼)

Lot Number 18 Section Number 36

according to the Cemetery Survey of the City of Hattiesburg, Mississippi known as Highland Cemetery, and containing

Two Grave space (s).

SAID Lot shall be used for burial purposes only and all graves therein must be checked and laid out by the Cemetery sexton before the same is dug and must be at least 4 feet deep and shall be, when completed, level with the ground. No shrubbery, vines or trees shall be planted in the Cemetery Lot and there shall be nothing left above the ground except markers which may be erected to meet all City regulations and requirements. All burials in the grave space(s) herein conveyed shall comply with applicable State and Federal laws governing human burial and with City rules and regulations pertaining thereto. If boxes or vaults are used they shall be at least 10 inches below the ground level.

GRANTEE herein shall not sell or convey this lot without a written permit from the Mayor and Council of the City of Hattiesburg, Mississippi.

WITNESS the signature and seal of the City of Hattiesburg, Mississippi, a Municipal Corporation, acting, by and through its duly authorized Mayor and City Clerk, on this, the 7th day August 2018.

ATTEST: CITY OF HATTIESBURG, MISSISSIPPI

_____ _____
CITY CLERK MAYOR

(S E A L)

STATE OF MISSISSIPPI
COUNTY OF FORREST/LAMAR

Personally appeared before me, the undersigned authority in and for said County and State, Toby Barker and Kermas Eaton, Mayor and City Clerk, respectively, of the City of Hattiesburg, Mississippi, a municipal corporation, each of whom acknowledged before me that they signed, executed and delivered the above and foregoing Cemetery Deed on the day and year therein mentioned as the act and deed of the City of Hattiesburg after having first been authorized so to do.

Given under my hand and official seal of office on this, the 7thday of August, 2018

My Commission Expires: _____
NOTARY PUBLIC

_____

STATE OF MISSISSIPPI
COUNTY OF FORREST/LAMAR
CITY OF HATTIESBURG
HATTIESBURG, MS

DEED TO CEMETERY LOT
SOUTH HILL CEMETERY

For and in consideration of the sum of ONE HUNDRED FIFTY AND NO/100 Dollars ($150.00), cash in hand paid to the City of Hattiesburg, Mississippi, the City of Hattiesburg, Mississippi acting by and through its duly authorized Mayor and City Clerk does hereby bargain, sell and convey unto Delores Cobbert, subject to the reservations and restrictions hereinafter set out and subject to rules and regulations now or hereafter adopted, the following described grave spaces:

South Half (S½) of the Northwest Quarter (NW¼)

Lot Number: 81 Section Number: 2

according to the Cemetery Survey of the City of Hattiesburg, Mississippi known as South Hill Cemetery, and containing
One (1) Grave space (s).

SAID Lot shall be used for burial purposes only and all graves therein must be checked and laid out by the Cemetery sexton before the same is dug and must be at least 4 feet deep and shall be, when completed, level with the ground. No shrubbery, vines or trees shall be planted in the Cemetery Lot and there shall be nothing left above the ground except markers which may be erected to meet all City regulations and requirements. All burials in the grave space(s) herein conveyed shall comply with applicable State and Federal laws governing human burial and with City rules and regulations pertaining thereto. If boxes or vaults are used they shall be at least 10 inches below the ground level.

GRANTEE herein shall not sell or convey this lot without a written permit from the Mayor and Council of the City of Hattiesburg, Mississippi.

WITNESS the signature and seal of the City of Hattiesburg, Mississippi, a Municipal Corporation, acting, by and through its duly authorized Mayor and City Clerk, on this, the 7th day of August, 2018.

ATTEST: CITY OF HATTIESBURG, MISSISSIPPI

_____ _____
CITY CLERK MAYOR
(S E A L)

STATE OF MISSISSIPPI
COUNTY OF FORREST/LAMAR

Personally, appeared before me, the undersigned authority in and for said County and State, Toby Barker and Kermas Eaton, Mayor and Deputy City Clerk, respectively, of the City of Hattiesburg, Mississippi, a municipal corporation, each of whom acknowledged before me that they signed, executed and delivered the above and foregoing Cemetery Deed on the day and year therein mentioned as the act and deed of the City of Hattiesburg after having first been authorized so to do.

Given under my hand and official seal of office on this, the 7th day of August, 2018.

My Commission Expires: _____
NOTARY PUBLIC

_____

City of Hattiesburg, MS

200 Forrest St.
P.O. Box 1898
Hattiesburg, MS 39401

Master

File Number: 2018-639

File ID:	2018-639	**Type:**	Regular Agenda Item	**Status:**	Approved
Version:	1	**Reference:**		**In Control:**	City Council
Requester:				**File Created:**	07/18/2018
Brief Title:	Claims docket for the period ending 7-31-2018.			**Final Action:**	
				Minute Book Number:	MB 2018-197

Title:
Approve claims docket for the period enhding July 31, 2018.

Notes:

		Agenda Date:	08/07/2018
Indexes:		**Agenda Number:**	VII.-16
Sponsors:		**Enactment Date:**	
Attachments:	DOCKET 18.07-31	**Enactment Number:**	
Contact:		**Meeting Date:**	
Drafter:		**Effective Date:**	

History of Legislative File

Version:	Acting Body:	Date:	Action:	Sent To:	Due Date:	Return Date:	Result:
1	City Council	08/07/2018	Approved on the Routine Agenda				
	Action Text:	Approved on the Routine Agenda					

Text of Legislative File 2018-639

Title

Approve claims docket for the period enhding July 31, 2018.

Summary

Claims docket for the period ending 7-31-2018.

Budget Information

Expenditure Type

Purchasing Item

Publication Information

CITY OF HATTIESBURG
DOCKET OF CLAIMS
PERIOD ENDING JULY 31, 2018

Date - 07/27/18

Vendor	Invoice Number	Purchase Order	Claims Number	Item Description	Check Date	Check No.	Check Amount
GENERAL FUND							
00001 AAMCO TRANS/AUTOMOTIVE S	106370	00181145	17006911	REPRS U#17528 TRAFFIC TRUCK	07/31/18	265286	1,386.67-
AAMCO TRANS/AUTOMOTIVE S							
Sum							1,386.67-
00001 ACUITY GROUP OF MISSISSI	11882	00181138	17006750	MONTHLY SERV 7/18	07/31/18	265287	1,116.00-
ACUITY GROUP OF MISSISSI							
Sum							1,116.00-
00001 AD WEAR	2372	00181206	17006995	BLACK CAPS SANIT DEPT	07/31/18	265288	233.66-
AD WEAR							
Sum							233.66-
00001 AFFORDABLE EMERGENCY LIG	1072	00180002	17006836	REPR LIGHTBAR U#20151 POLICE	07/31/18	265291	1,572.56-
AFFORDABLE EMERGENCY LIG							
Sum							1,572.56-
00001 AGRI-AFC LLC	5482270	00181044	17006787	ANT POISON CEMETERIES	07/31/18	265292	180.00-
AGRI-AFC LLC							
Sum							180.00-
00001 AIRDESIGNS SIGN & GRAFFI	505664	00180609	17006733	PARKING SIGNS FIRE ADM	07/31/18	265293	60.00-
AIRDESIGNS SIGN & GRAFFI							
Sum							60.00-
00001 AIRGAS USA LLC (NORDAN S	9077820927	00180826	17006740	REFILL CYLINDERS CONSTR SHOP	07/31/18	265294	599.00-
00001 AIRGAS USA LLC (NORDAN S	9954348906	00181237	17006829	CYLINDER RENT AIRPORT	07/31/18	265294	869.91-
00001 AIRGAS USA LLC (NORDAN S	9078064272	00181125	17006854	MEDICAL OXYGEN FIRE DEPT	07/31/18	265294	106.70-
00001 AIRGAS USA LLC (NORDAN S	9078311782	00180945	17006961	WELDING MACHINE SUPP SHOP	07/31/18	265294	409.84-
AIRGAS USA LLC (NORDAN S							
Sum							1,985.45-
00001 ALLBRITTON CHAIN SAW & L	57998	00181051	17006762	BACKPACK BLOWER FIRE DEPT	07/31/18	265295	104.54-
00001 ALLBRITTON CHAIN SAW & L	58124	00181129	17006849	EDGER BLADES HEALTH DIV	07/31/18	265295	215.00-
ALLBRITTON CHAIN SAW & L							
Sum							319.54-
00001 AT&T	601545491010	02018721	17006793	SERV 7/8-8/7 POLICE DISPATCH	07/31/18	265301	167.28-
00001 AT&T	601M26940440	00020189	17006794	SRV 7/8-8/7/18 POLICE	07/31/18	265302	76.00-
00001 AT&T	M26684200105	00181349	17006886	INTERACT SUPPORT	07/31/18	265303	6,790.00-
00001 AT&T	M26491400105	00181349	17006887	INTERACT SUPPORT	07/31/18	265304	47.00-
00001 AT&T	056314932900	02018729	17006902	LONG DIST 6/18 POLICE DISPATCH	07/31/18	265305	41.71-
AT&T							
Sum							7,121.99-
00001 AT&T CAPITAL SERVICES	3041473	00181230	17006813	INTERACT PUB SAFETY SOFTWARE	07/31/18	265306	12,556.56-

AT&T CAPITAL SERVICES							
Sum							12,556.56-
00001 AT&T MOBILITY	287273578351	00181116	17006747	WIRELESS SRV 6/18 VARI DEPTS	07/31/18	265307	9,407.75-
00001 AT&T MOBILITY	287273861504	00181118	17006748	GPS TRACKING 6/18 VARI DEPTS	07/31/18	265307	4,206.22-
AT&T MOBILITY							
Sum							13,613.97-
00001 AUTO ARMATURE SERVICE IN	13148	00181313	17006874	BATTERY U#20071 SANIT	07/31/18	265308	317.90-
00001 AUTO ARMATURE SERVICE IN	13149	00181313	17006875	BATTERY U#15893 SANIT	07/31/18	265308	199.95-
00001 AUTO ARMATURE SERVICE IN	13107	00181363	17006895	BATTERY U#17893 POLICE	07/31/18	265308	160.95-
00001 AUTO ARMATURE SERVICE IN	13136	00181363	17006896	BATTERY U#18323 POLICE	07/31/18	265308	160.95-
00001 AUTO ARMATURE SERVICE IN	13173	00181361	17006913	BATTERIES U#6894 CONSTR	07/31/18	265308	317.90-
00001 AUTO ARMATURE SERVICE IN	13049	00181140	17006917	STARTER U#14499 AIRPORT	07/31/18	265308	99.95-
00001 AUTO ARMATURE SERVICE IN	13213	00181422	17007041	BATTERIES U#15893 SANIT	07/31/18	265308	476.85-
00001 AUTO ARMATURE SERVICE IN	13220	00181432	17007042	STARTER U#13175 HEALTH DIV	07/31/18	265308	89.95-
AUTO ARMATURE SERVICE IN							
Sum							1,824.40-
00001 AUTO ZONE	0139680055	00181376	17006931	REPR PTS U#18202 POLICE	07/31/18	265309	195.99-
AUTO ZONE							
Sum							195.99-
00001 AUTOMOTIVE GLASS SPECIAL	I223864(A)	00180774	17006897	WINDOW REPR U#20370 FIRE	07/31/18	265310	78.00-
00001 AUTOMOTIVE GLASS SPECIAL	I223780	00180671	17006901	REPRS U#19887 SANIT	07/31/18	265310	850.00-
AUTOMOTIVE GLASS SPECIAL							
Sum							928.00-
00001 AXON ENTERPRISE, INC	SI-1544355	00181306	17007034	TASER CARTRIDGES POLICE	07/31/18	265311	3,600.00-
AXON ENTERPRISE, INC							
Sum							3,600.00-
00001 BANC OF AMERICA PUBLIC C	R53055	02018740	17007046	ENERGY PERFORMANCE LEASE 8/18	07/26/18	112894	261,822.00-
BANC OF AMERICA PUBLIC C							
Sum							261,822.00-
00001 BARNEY'S OF LAFAYETTE	00119802-0	00180429	17006843	HOLSTERS POLICE DEPT	07/31/18	265312	420.36-
BARNEY'S OF LAFAYETTE							
Sum							420.36-
00001 BLOSSMAN GAS INC	4396216	00181285	17007040	PROPANE U#20067	07/31/18	265313	9.00-
BLOSSMAN GAS INC							
Sum							9.00-
00001 BODY TECH INC	4760 PO#1802	00180286	17006805	REPRS U#16716 POLICE	07/31/18	265315	212.00-
00001 BODY TECH INC	4760 PO#1810	00181046	17006910	REPRS U#16756 POLICE	07/31/18	265315	1,253.30-
BODY TECH INC							
Sum							1,465.30-
00001 BRACKMAN MOWER WAREHOUSE	39982	00181115	17006774	MOWER BELTS HEALTH DIV	07/31/18	265319	364.00-
00001 BRACKMAN MOWER WAREHOUSE	40150	00181229	17006916	CHAIN HEALTH DIV	07/31/18	265319	7.95-

BRACKMAN MOWER WAREHOUSE

Sum								371.95-
00001	BRACKMAN SERVICE CO	PO#180660 6/	00180660	17006944	CLOTHES DRYER REPR #8 FIRE	07/31/18	265320	200.46-

BRACKMAN SERVICE CO

Sum								200.46-
00001	BROADDUS & ASSOCIATES	4103-14	00181183	17006796	SERVS 6/1-30/18	07/31/18	265321	617.50-

BROADDUS & ASSOCIATES

Sum								617.50-
00001	C SPIRE (MEGAGATE)	1278066	00181163	17006755	NETWORK/INTERNET 7/18 IT DEPT	07/31/18	265324	15,126.27-

C SPIRE (MEGAGATE)

Sum								15,126.27-
00001	CANON FINANCIAL SERVICES	18866109	00181303	17006831	COPIER 7/18 PURCH/ACCTG	07/31/18	265325	115.00-

CANON FINANCIAL SERVICES

Sum								115.00-
00001	CANON SOLUTIONS AMERICA	4026394942	00181120	17006749	COPIER MNT 7/18 PURCHASING	07/31/18	265326	28.14-

CANON SOLUTIONS AMERICA

Sum								28.14-
00001	CARQUEST AUTO PARTS STOR	14758-111529	00181085	17006736	REPR PTS U#16237 PUB WORKS	07/31/18	265327	19.18-
00001	CARQUEST AUTO PARTS STOR	14758-111530	00181090	17006739	SHOP SUPP PUBLIC WORKS	07/31/18	265327	76.04-
00001	CARQUEST AUTO PARTS STOR	14758-111528	00180841	17006742	A/C REFRIGERANT ST CLEANING	07/31/18	265327	104.16-
00001	CARQUEST AUTO PARTS STOR	14758-111637	00180687	17006777	REPR PTS U#18548 PLANNING	07/31/18	265327	31.66-
00001	CARQUEST AUTO PARTS STOR	14758-111725	00181202	17006810	AIR COMP OIL CONSTR DEPT	07/31/18	265327	67.96-
00001	CARQUEST AUTO PARTS STOR	14758-111985	00181289	17006998	REPR PTS U#11970 SANIT	07/31/18	265327	14.80-

CARQUEST AUTO PARTS STOR

Sum								313.80-
00001	CINTAS CORPORATION #J66	J66588159	00181170	17006763	UNIFORMS 5/02 TRAFFIC	07/31/18	265333	31.92-
00001	CINTAS CORPORATION #J66	J66588119	00181170	17006764	MOP/MAT 5/28 TRAFFIC	07/31/18	265333	7.90-
00001	CINTAS CORPORATION #J66	J66589423	00181170	17006765	UNIFORMS 6/04 TRAFFIC	07/31/18	265333	31.92-
00001	CINTAS CORPORATION #J66	J66589425	00181170	17006766	MOP/MAT 6/04 TRAFFIC	07/31/18	265333	7.90-
00001	CINTAS CORPORATION #J66	J66590657	00181170	17006767	UNIFORMS 6/11 TRAFFIC	07/31/18	265333	31.32-
00001	CINTAS CORPORATION #J66	J66590659	00181170	17006768	MOP/MAT 6/11 TRAFFIC	07/31/18	265333	7.90-
00001	CINTAS CORPORATION #J66	J66596667	00181214	17006799	UNIFORMS 7/16 CONSTR	07/31/18	265333	73.05-
00001	CINTAS CORPORATION #J66	J66574027	00181259	17006825	UNIFORMS 7/16 TRAFFIC	07/31/18	265333	31.32-
00001	CINTAS CORPORATION #J66	J66596675	00181259	17006826	MOP/MAT 7/16 TRAFFIC	07/31/18	265333	7.90-
00001	CINTAS CORPORATION #J66	J66596674	00181272	17006827	MOP/MAT 7/16 GO&FS	07/31/18	265333	24.96-
00001	CINTAS CORPORATION #J66	J66596676	00181272	17006828	MOP/MAT 7/16 SANIT	07/31/18	265333	24.04-
00001	CINTAS CORPORATION #J66	J66596668	00181316	17006856	UNIFORMS 7/16 PUBLIC WORKS	07/31/18	265333	138.81-
00001	CINTAS CORPORATION #J66	J66596672	00181316	17006857	UNIFORMS 7/16 PUBLIC WORKS	07/31/18	265333	71.32-
00001	CINTAS CORPORATION #J66	J66596666	00181316	17006858	UNIFORMS 7/16 PUBLIC WORKS	07/31/18	265333	10.00-
00001	CINTAS CORPORATION #J66	J66596669	00181316	17006859	UNIFORMS 7/16 PUBLIC WORKS	07/31/18	265333	30.44-
00001	CINTAS CORPORATION #J66	J66596671	00181316	17006860	UNIFORMS 7/16 SHOP	07/31/18	265333	34.71-
00001	CINTAS CORPORATION #J66	J66596670	00181316	17006861	UNIFORMS 7/16 SANIT	07/31/18	265333	175.22-
00001	CINTAS CORPORATION #J66	J66597851	00181449	17006963	UNIFORMS 7/23 CONSTR	07/31/18	265333	73.05-
00001	CINTAS CORPORATION #J66	J66597857	00181468	17007015	UNIFORMS 7/23 TRAFFIC	07/31/18	265333	31.32-
00001	CINTAS CORPORATION #J66	J66597859	00181468	17007016	MOP/MAT 7/23 TRAFFIC	07/31/18	265333	7.90-
00001	CINTAS CORPORATION #J66	J66595218	00181553	17007084	UNIFORMS 7/06 CEM/FORESTRY	07/31/18	265333	52.58-

00001	CINTAS CORPORATION #J66	J66596423	00181553	17007085	UNIFORMS 7/13 CEM/FORESTRY	07/31/18	265333	63.58-
00001	CINTAS CORPORATION #J66	J66597607	00181553	17007086	UNIFORMS 7/20 CEM/FORESTRY	07/31/18	265333	56.76-
00001	CINTAS CORPORATION #J66	J66598813	00181553	17007087	UNIFORMS 7/27 CEM/FORESTRY	07/31/18	265333	52.36-
00001	CINTAS CORPORATION #J66	J66595219	00181553	17007088	MOP/MAT 7/06 CEM/FORESTRY	07/31/18	265333	15.70-
00001	CINTAS CORPORATION #J66	J66596424	00181553	17007089	MOP/MAT 7/13 CEM/FORESTRY	07/31/18	265333	15.70-
00001	CINTAS CORPORATION #J66	J66597608	00181553	17007090	MOP/MAT 7/20 CEM/FORESTRY	07/31/18	265333	15.70-
00001	CINTAS CORPORATION #J66	J66598814	00181553	17007091	MOP/MAT 7/27 CEM/FORESTRY	07/31/18	265333	15.70-
CINTAS CORPORATION #J66								
Sum								1,140.98-
00001	CITY OF HATTIESBURG FUND	TRF 2ND 7/18	02018723	17006812	TRF 2ND 7/18 PAYROLL	07/18/18	112860	1,112,801.37-
CITY OF HATTIESBURG FUND								
Sum								1,112,801.37-
00001	CLARION LEDGER (ADVERTIS	211698 17942	00181241	17006814	PUB NOTICE PART PLAN/MPO	07/31/18	265335	82.36-
CLARION LEDGER (ADVERTIS								
Sum								82.36-
00001	CLARK, JOSEPH	TRAVEL REIMB	00181409	17006934	EXPNS HAZ MATL TECH CLASS	07/31/18	265336	128.18-
CLARK, JOSEPH								
Sum								128.18-
00001	CLARKE	5082594	00180931	17006773	BIOMIST HEALTH DIV	07/31/18	265338	4,200.00-
00001	CLARKE	5082594 FRT	00181164	17006775	FREIGHT CHARGE PO#180931	07/31/18	265338	154.53-
CLARKE								
Sum								4,354.53-
00001	CLEAR CHANNEL RADIO-(IHE	4612432165	00178606	17006780	ADDL RADIO ADS PO#177615	07/31/18	265339	588.00-
00001	CLEAR CHANNEL RADIO-(IHE	4612442575	00178606	17006792	ADDL RADIO ADS 5/18 PO#177615	07/31/18	265339	212.00-
CLEAR CHANNEL RADIO-(IHE								
Sum								800.00-
00001	CLEMTS HARDWARE	121091	00181436	17006983	PAINT/WASP SPRAY/WTR COOLER	07/31/18	265341	104.93-
00001	CLEMTS HARDWARE	121083	00181391	17006992	HAND TOOLS ASPHALT CREW	07/31/18	265341	716.80-
CLEMTS HARDWARE								
Sum								821.73-
00001	COCA COLA BOTTLING COMPA	1109201398	00181070	17007028	WATER NNO KICKOFF LUNCH/LEARN	07/31/18	265343	332.55-
COCA COLA BOTTLING COMPA								
Sum								332.55-
00001	COMCAST CABLEVISION OF H	839641073089	00181396	17006926	CABLE 7/15-8/14/18 CITY HALL	07/31/18	265345	127.90-
COMCAST CABLEVISION OF H								
Sum								127.90-
00001	CONNECTION INC	55951092	00180929	17006905	STORAGE FOR WATCHGUARD	07/31/18	265347	2,560.38-
CONNECTION INC								
Sum								2,560.38-
00001	DAKTECH COMPUTERS	INV0334991	00180673	17006738	COMPUTER SUPP ENGR DEPT	07/31/18	265350	2,799.00-
DAKTECH COMPUTERS								

Sum								2,799.00-
00001	DEAN, DA'QUINTON	TRAVEL REIMB	00181402	17006935	EXPNS BURN TESTING JKSN ACDMY	07/31/18	265351	43.22-
DEAN, DA'QUINTON								
Sum								43.22-
00001	EATON, ALVIN K (PETTY CA	PETTY CASH 6	00181513	17007047	PETTY CASH 6/18 VARI DEPTS	07/31/18	265359	619.44-
EATON, ALVIN K (PETTY CA								
Sum								619.44-
00001	ECONOMY SUPPLY CO	299057	00181247	17006914	LOCKS SANIT DEPT	07/31/18	265360	27.00-
00001	ECONOMY SUPPLY CO	299048	00181258	17006981	CABINET PULLEYS HUMAN RES	07/31/18	265360	31.84-
ECONOMY SUPPLY CO								
Sum								58.84-
00001	EMERGENCY EQUIPMENT PROF	435939 FRT	00180974	17006845	FREIGHT CHARGE	07/31/18	265361	12.50-
00001	EMERGENCY EQUIPMENT PROF	435925 FREIG	00181211	17006957	FREIGHT CHARGE	07/31/18	265361	10.12-
00001	EMERGENCY EQUIPMENT PROF	436073 FREIG	00181225	17007037	FREIGHT CHARGE	07/31/18	265361	35.65-
EMERGENCY EQUIPMENT PROF								
Sum								58.27-
00001	EMPIRE TRUCK SALES (H'BU	CE006139453:	00180491	17006900	REPR PTS U#20089 SANIT	07/31/18	265362	75.83-
00001	EMPIRE TRUCK SALES (H'BU	CE006139439:	00181337	17006999	REPR PTS U#15892 SANIT	07/31/18	265362	176.23-
EMPIRE TRUCK SALES (H'BU								
Sum								252.06-
00001	EQUIFAX INFORMATION SERV	256VC00165	00181381	17006932	ONLINE INVESTIGATIONS POLICE	07/31/18	265363	74.23-
EQUIFAX INFORMATION SERV								
Sum								74.23-
00001	FASTENAL COMPANY	MSHAT210171	00180898	17006735	PAINT SUPP TRAFFIC DEPT	07/31/18	265366	65.45-
00001	FASTENAL COMPANY	MSHAT210337	00180991	17006741	NUTS/BOLTS CONSTR/TRAFF STOCK	07/31/18	265366	61.88-
00001	FASTENAL COMPANY	MSHAT210574	00180989	17006919	BEACON WARNING LIGHTS CMTERY	07/31/18	265366	68.40-
00001	FASTENAL COMPANY	MSHAT210676	00181101	17006996	SAFETY VESTS SANIT DEPT	07/31/18	265366	103.37-
00001	FASTENAL COMPANY	MSHAT210675	00181205	17006997	GLOVES SANIT DEPT	07/31/18	265366	8.21-
FASTENAL COMPANY								
Sum								307.31-
00001	FEDERAL EXPRESS	6-183-06426	00181182	17006798	SERV 5/7/18 FIRE DEPT	07/31/18	265367	19.54-
00001	FEDERAL EXPRESS	6-176-69012	00181360	17006876	SERV 5/2/18 DELGADO COUNCIL	07/31/18	265367	33.48-
00001	FEDERAL EXPRESS	6-161-85019	00181360	17006877	SRV 4/19/18 BERNARDO CNCL CLK	07/31/18	265367	47.15-
00001	FEDERAL EXPRESS	6-212-23479	00181362	17006885	SERV 6/4/18 IT DEPT	07/31/18	265367	90.98-
00001	FEDERAL EXPRESS	6-212-23479(	00181437	17006952	SERV 6/6/18 MPO DEPT	07/31/18	265367	16.95-
00001	FEDERAL EXPRESS	6-204-26960	00181437	17006953	SERV 5/31/18 MPO DEPT	07/31/18	265367	24.57-
FEDERAL EXPRESS								
Sum								232.67-
00001	FRAMES AND PANES	4005	00181201	17006797	GUIDON FLAG RECRUIT CLASS #34	07/31/18	265369	155.67-
FRAMES AND PANES								
Sum								155.67-
00001	FUELMAN OF MS	BG127044 NP5	00181304	17006833	FUEL CHGS 6/4-10/18 POLICE	07/31/18	265370	36.03-
00001	FUELMAN OF MS	BG127044 NP5	00181304	17006834	FUEL CHGS 7/2-8/18 POLICE	07/31/18	265370	36.16-

00001 FUELMAN OF MS	BG127044 NP5	00181390	17006928	FUEL CHGS 7/9-15/18 POLICE	07/31/18	265370	223.43-
FUELMAN OF MS							
Sum							295.62-
00001 FV RECYCLING	2018-13220	00181318	17006863	RECYCLE FEES 7/18 SANIT	07/31/18	265371	45.50-
00001 FV RECYCLING	2018-13219	00181318	17006864	RECYCLE FEES 7/18 SANIT	07/31/18	265371	83.00-
00001 FV RECYCLING	2018-13235	00181318	17006865	RECYCLE FEES 7/18 SANIT	07/31/18	265371	24.25-
00001 FV RECYCLING	2018-13292	00181318	17006866	RECYCLE FEES 7/18 SANIT	07/31/18	265371	41.25-
00001 FV RECYCLING	2018-13294	00181318	17006867	RECYCLE FEES 7/18 SANIT	07/31/18	265371	131.25-
00001 FV RECYCLING	2018-12714	00181557	17007079	RECYCLE FEES 5/18 SANIT	07/31/18	265371	22.75-
00001 FV RECYCLING	2018-13360	00181557	17007080	RECYCLE FEES 7/18 SANIT	07/31/18	265371	23.75-
00001 FV RECYCLING	2018-13418	00181557	17007081	RECYCLE FEES 7/18 SANIT	07/31/18	265371	50.75-
00001 FV RECYCLING	2018-13419	00181557	17007082	RECYCLE FEES 7/18 SANIT	07/31/18	265371	135.50-
FV RECYCLING							
Sum							558.00-
00001 GALL'S LLC	010298456	00181079	17006908	HANDCUFFS/CROSS GUARD VESTS	07/31/18	265373	2,243.75-
GALL'S LLC							
Sum							2,243.75-
00001 GARNER LUMLEY ELECTRIC S	550819	00181207	17006906	ELEC SUPP CITY HALL	07/31/18	265374	30.96-
GARNER LUMLEY ELECTRIC S							
Sum							30.96-
00001 GILLILANDS ELECTRONICS S	67130	00181504	17007012	MNTHLY PHONE RENT POLICE DEPT	07/31/18	265376	884.99-
GILLILANDS ELECTRONICS S							
Sum							884.99-
00001 GLADDEN LAW OFFICE PLLC	0189	00181516	17007049	SRV 6-7/18 PLAN/ZONE/CODE	07/31/18	265377	2,274.50-
GLADDEN LAW OFFICE PLLC							
Sum							2,274.50-
00001 GLOBAL SECURITY COMPANY	10232	02018731	17007007	SECURITY DETAIL 07/31/18	07/31/18	265378	96.25-
00001 GLOBAL SECURITY COMPANY	10233	02018731	17007008	SECURITY DETAIL 07/31/18	07/31/18	265378	192.50-
GLOBAL SECURITY COMPANY							
Sum							288.75-
00001 GOPALAN, HEMA	TRAVEL REIMB	00181428	17006950	EXPNS ESRI USER CONF S DIEGO	07/31/18	265380	111.08-
GOPALAN, HEMA							
Sum							111.08-
00001 GROVER BROS RESTAURANT &	220000003401	00180990	17006731	ICE BAGS FIRE DEPT	07/31/18	265381	110.00-
GROVER BROS RESTAURANT &							
Sum							110.00-
00001 H D INDUSTRIES INC	27042	00180979	17006737	REPR PTS U#20067 PUBLIC WORKS	07/31/18	265382	1,774.82-
H D INDUSTRIES INC							
Sum							1,774.82-
00001 H'BURG COCA COLA BOTTLIN	1092206970	00181167	17006802	BOTTLED WATER MAYOR'S OFFICE	07/31/18	265384	73.90-
00001 H'BURG COCA COLA BOTTLIN	1167208783	00181226	17006851	POWERADE CEM/FORESTRY CREWS	07/31/18	265384	160.00-

H'BURG COCA COLA BOTTLIN

Sum								233.90-
00001	H'BURG CYCLES INC	1873118	00181528	17007055	PLASTIC ROOF CONST KAWASKI	07/31/18	265385	308.95-

H'BURG CYCLES INC

Sum								308.95-
00001	HARPER, PATRINA	TRAVEL REIMB	00181486	17007013	EXPNS CJIS TRNG SYMPOSIUM	07/31/18	265389	48.07-

HARPER, PATRINA

Sum								48.07-
00001	HATTIESBURG AMERICAN-ACC	H299899 6150	00181503	17007009	CITY WIDE ADS AND NOTICES	07/31/18	265383	732.24-

HATTIESBURG AMERICAN-ACC

Sum								732.24-
00001	HATTIESBURG TREE SERVICE	PO#180915 7/	00180915	17006898	TREE RMVL 211 S 24TH ST	07/31/18	265391	3,000.00-

HATTIESBURG TREE SERVICE

Sum								3,000.00-
00001	HAVARD PEST CONTROL INC	1308052	00181438	17006962	QTRLY PEST CONTROL PUB WORKS	07/31/18	265394	220.00-
00001	HAVARD PEST CONTROL INC	1308024	02018733	17007057	QTRLY SERV POLICE COMPLEX	07/31/18	265394	125.00-
00001	HAVARD PEST CONTROL INC	1308025	02018733	17007058	QTRLY SERV POLICE SUB-STA	07/31/18	265394	40.00-
00001	HAVARD PEST CONTROL INC	1308066	02018733	17007059	QTRLY SERV POLICE DISPATCH	07/31/18	265394	48.00-
00001	HAVARD PEST CONTROL INC	1308026	02018733	17007060	QTRLY SERV #1 FIRE STA	07/31/18	265394	50.00-
00001	HAVARD PEST CONTROL INC	1308053	02018733	17007061	QTRLY SERV FIRE ADM OFFICE	07/31/18	265394	48.00-
00001	HAVARD PEST CONTROL INC	1308027	02018733	17007062	QTRLY SERV #3 FIRE STA	07/31/18	265394	48.00-
00001	HAVARD PEST CONTROL INC	1308028	02018733	17007063	QTRLY SERV #4 FIRE STA	07/31/18	265394	48.00-
00001	HAVARD PEST CONTROL INC	1308029	02018733	17007064	QTRLY SERV #5 FIRE STA	07/31/18	265394	48.00-
00001	HAVARD PEST CONTROL INC	1308030	02018733	17007065	QTRLY SERV #6 FIRE STA	07/31/18	265394	48.00-
00001	HAVARD PEST CONTROL INC	1308031	02018733	17007066	QTRLY SERV #7 FIRE STA	07/31/18	265394	48.00-
00001	HAVARD PEST CONTROL INC	1308038	02018733	17007067	QTRLY SERV POLICE RANGE	07/31/18	265394	48.00-
00001	HAVARD PEST CONTROL INC	1308034	02018733	17007068	QTRLY SERV P/F ACADEMY	07/31/18	265394	50.00-
00001	HAVARD PEST CONTROL INC	1308036	02018733	17007069	QTRLY SERV LAKEVW PAVILION	07/31/18	265394	50.00-
00001	HAVARD PEST CONTROL INC	1308056	02018733	17007070	QTRLY SERV MEDICAL CENTER	07/31/18	265394	48.00-
00001	HAVARD PEST CONTROL INC	1308047	02018733	17007071	QTRLY SERV ENGR OFFICE	07/31/18	265394	55.00-
00001	HAVARD PEST CONTROL INC	1308048	02018733	17007072	QTRLY SERV TRAFFIC BLDG	07/31/18	265394	45.00-
00001	HAVARD PEST CONTROL INC	1308054	02018733	17007073	QTRLY SERV AIRPORT	07/31/18	265394	45.00-
00001	HAVARD PEST CONTROL INC	1308055	02018733	17007074	QTRLY SERV AIRPORT MAINT	07/31/18	265394	45.00-
00001	HAVARD PEST CONTROL INC	1308065	02018733	17007075	QTRLY SERV SOUTH HILL CEM	07/31/18	265394	60.00-

HAVARD PEST CONTROL INC

Sum								1,217.00-
00001	HILL & BROOKS COFFEE & T	703559	00181522	17007048	COFFEE SERV M/ADM	07/31/18	265395	100.49-

HILL & BROOKS COFFEE & T

Sum								100.49-
00001	HOBGOOD, GRANT	TRAVEL REIMB	00181424	17006951	EXPNS ERSI USER CONF S DIEGO	07/31/18	265396	76.14-

HOBGOOD, GRANT

Sum								76.14-
00001	HOL-MAC CORPORATION	349357	00181159	17006847	REPR PTS U#14408 SANIT	07/31/18	265397	271.02-
00001	HOL-MAC CORPORATION	349356	00181166	17006848	REPR PTS U#19887 SANIT	07/31/18	265397	126.47-

HOL-MAC CORPORATION							
Sum							397.49-
00001 HOLLAND, JOHN	TRAVEL REIMB	00181406	17006936	EXPNS BURN TESTING JKSN ACDMY	07/31/18	265398	35.62-
HOLLAND, JOHN							
Sum							35.62-
00001 HOOK-FAST SPECIALTIES IN	331936	00180629	17006872	NAME TAGS CHIEF/ASST.CHIEF	07/31/18	265399	22.49-
00001 HOOK-FAST SPECIALTIES IN	332186	00180893	17006984	NAME TAGS FIRE CHIEF/ASSISTNT	07/31/18	265399	41.07-
00001 HOOK-FAST SPECIALTIES IN	332148	00178229	17007002	FIRE DEPT BADGES	07/31/18	265399	88.31-
HOOK-FAST SPECIALTIES IN							
Sum							151.87-
00001 HOWARD COMPUTERS INC	18-00824798	00180992	17006903	SCANNERS MUN COURT	07/31/18	265401	1,395.00-
HOWARD COMPUTERS INC							
Sum							1,395.00-
00001 HUB CITY SPOKES	81605	00181191	17006795	CITY WIDE ADS AND NOTICES	07/31/18	265403	702.00-
00001 HUB CITY SPOKES	82200	00181342	17006883	CITY WIDE ADS AND NOTICES	07/31/18	265403	73.40-
00001 HUB CITY SPOKES	82203	00181359	17006884	CITY WIDE ADS AND NOTICES	07/31/18	265403	486.24-
00001 HUB CITY SPOKES	82644	00181559	17007076	NOTICE FOR PUBLIC COMMENT	07/31/18	265403	63.72-
HUB CITY SPOKES							
Sum							1,325.36-
00001 HUGHES SUPPLY	S153412150.0	00181165	17006907	A/C REPR SUPP INFO TECH DEPT	07/31/18	265404	536.22-
00001 HUGHES SUPPLY	S153435942.0	00181278	17007077	MANIFOLD/HOSE CONSTR DEPT	07/31/18	265404	105.39-
HUGHES SUPPLY							
Sum							641.61-
00001 HUMAN FACTOR RESEARCH GR	10237	00180735	17006783	PPCT TRNG MANUALS P/F ACADEMY	07/31/18	265405	249.14-
HUMAN FACTOR RESEARCH GR							
Sum							249.14-
00001 INDOFF INC	3109639	00179656	17007043	OFFICE SUPP CEMETERY	07/31/18	265406	159.98-
00001 INDOFF INC	3109655	00179656	17007044	OFFICE SUPP CEMETERY	07/31/18	265406	63.45-
00001 INDOFF INC	3131945	00179656	17007045	CREDIT INV#3109639	07/31/18	265406	79.99
INDOFF INC							
Sum							143.44-
00001 INTAPOL INDUSTRIES, INC	14941	00180215	17006759	MTRCYCLE BOOTS MOTOR OFFICERS	07/31/18	265407	1,728.94-
INTAPOL INDUSTRIES, INC							
Sum							1,728.94-
00001 INTERFACE SECURITY SYSTE	19127571	00181397	17006946	SECURITY 8/18 HILND CEMETERY	07/31/18	265408	33.02-
00001 INTERFACE SECURITY SYSTE	19134608	00181397	17006947	SECURITY 8/18 SOUTH HILL CEM	07/31/18	265408	29.95-
INTERFACE SECURITY SYSTE							
Sum							62.97-
00001 INTERNATIONAL ASSN OF WO	NEW MBRSHP-S	00181248	17006824	NEW MBRSHP SEALY POLICE	07/31/18	265409	40.00-
INTERNATIONAL ASSN OF WO							
Sum							40.00-
00001 INTL INSTITUTE OF MUNICI	31038 EATON	00181274	17006815	MBRSHOP DUES EATON 7/18-9/19	07/31/18	265410	125.00-

INTL INSTITUTE OF MUNICI							
Sum							125.00-
00001 IRBY, STUART C CO	S010818639.0	00180721	17006899	ELEC SUPP CONSTR DEPT	07/31/18	265411	175.31-
00001 IRBY, STUART C CO	S010848120.0	00181200	17006912	BLDG SUPP YOUTH ART MUSEUM	07/31/18	265411	43.05-
IRBY, STUART C CO							
Sum							218.36-
00001 J M H GRAPHICS	14335	00180706	17006804	SHIRTS T BLAND LOSS CONTROL	07/31/18	265412	191.76-
00001 J M H GRAPHICS	14468	00180996	17006850	PKS/REC EVENT T-SHIRTS	07/31/18	265412	445.00-
00001 J M H GRAPHICS	14533	00181297	17006929	ENTRY TEAM T-SHIRTS POLICE	07/31/18	265412	314.75-
J M H GRAPHICS							
Sum							951.51-
00001 JOHNSON CONTROLS, INC	1-6774285035	00181158	17006770	SERVS 6/18-8/18 ENGR DEPT	07/31/18	265414	2,291.75-
JOHNSON CONTROLS, INC							
Sum							2,291.75-
00001 JONES, EDWARD	TRAVEL REIMB	00181408	17006937	EXPNS BURN TESTING JKSN ACDMY	07/31/18	265415	46.92-
JONES, EDWARD							
Sum							46.92-
00001 KEELING COMPANY (HATTIES	S3442084.001	00181309	17006991	PIPE SUPP TATUM PK/STOCK	07/31/18	265416	7,821.60-
00001 KEELING COMPANY (HATTIES	S3442084.003	00181309	17007056	PIPE SUPP TATUM PARK/STOCK	07/31/18	265416	1,955.40-
KEELING COMPANY (HATTIES							
Sum							9,777.00-
00001 KEEP AMERICA BEAUTIFUL I	NSF18-0104-I	00181246	17007092	AFFILIATE FEE KHB 2018	07/31/18	265417	275.00-
KEEP AMERICA BEAUTIFUL I							
Sum							275.00-
00001 KNOTT, CEDRIC	TRAVEL REIMB	00181404	17006938	EXPNS BURN TESTING JKSN ACDMY	07/31/18	265420	31.22-
KNOTT, CEDRIC							
Sum							31.22-
00001 LARRY'S WRECKER SERVICE	4780	00181266	17006817	TOWING CHEV COLORADO	07/31/18	265423	225.00-
00001 LARRY'S WRECKER SERVICE	4781	00181266	17006818	TOWING FORD FUSION	07/31/18	265423	55.00-
00001 LARRY'S WRECKER SERVICE	4834	00181266	17006819	TOWING JEEP LIBERTY	07/31/18	265423	150.00-
00001 LARRY'S WRECKER SERVICE	4831	00181266	17006820	TOWING U#18330 POLICE	07/31/18	265423	55.00-
00001 LARRY'S WRECKER SERVICE	4701	00181266	17006821	TOWING U#18201 POLICE	07/31/18	265423	55.00-
00001 LARRY'S WRECKER SERVICE	4702	00181266	17006822	TOWING U#18330 POLICE	07/31/18	265423	55.00-
00001 LARRY'S WRECKER SERVICE	4704	00181324	17006868	TOWING U#15784 HEALTH DIV	07/31/18	265423	55.00-
00001 LARRY'S WRECKER SERVICE	4951	00181384	17006933	TOWING U#18325 POLICE	07/31/18	265423	55.00-
LARRY'S WRECKER SERVICE							
Sum							705.00-
00001 LEWIS, WILLIAM	TRAVEL REIMB	00181410	17006939	EXPNS BURN TESTING/RECRUITS	07/31/18	265424	76.37-
LEWIS, WILLIAM							
Sum							76.37-
00001 LINEBARGER GOGGAN BLAIR	6/29/2018	02018710	17006746	POLICE FINES COLL.FEE	07/31/18	265425	191.18-
00001 LINEBARGER GOGGAN BLAIR	7/16/2018	02018737	17007004	POLICE FINES COLL.FEE	07/31/18	265425	427.63-

LINEBARGER GOGGAN BLAIR								
Sum								618.81-
00001 MADDEN, WILLIAM	TRAVEL REIMB	00181403	17006940	EXPNS BURN TESTING JKSN ACDMY		07/31/18	265426	44.39-
MADDEN, WILLIAM								
Sum								44.39-
00001 MAY'S TRUCKING SERVICE	456442	00181538	17007050	HAUL DEBRIS 213 W 7TH ST		07/31/18	265427	990.00-
00001 MAY'S TRUCKING SERVICE	456448	00181538	17007051	HAUL DEBRIS 115 HARRELL ST		07/31/18	265427	540.00-
00001 MAY'S TRUCKING SERVICE	456447	00181538	17007052	HAUL DEBRIS 201 CHESTNUT		07/31/18	265427	630.00-
MAY'S TRUCKING SERVICE								
Sum								2,160.00-
00001 MCELHANEY PLUMBING INC	268728	00180468	17006734	HEAVY DUTY DOLLY TRAFFIC DEPT		07/31/18	265429	49.95-
MCELHANEY PLUMBING INC								
Sum								49.95-
00001 MEDICAL ANALYSIS-GHV	10331	00181380	17006927	SERVS/LAB FEES 7/18 CLINIC		07/31/18	265431	30,272.59-
MEDICAL ANALYSIS-GHV								
Sum								30,272.59-
00001 METRIX SOLUTIONS	M33608	00178323	17006925	COMPUTER SUPP CITY HALL		07/31/18	265432	379.37-
METRIX SOLUTIONS								
Sum								379.37-
00001 MID SOUTH UNIFORM & SUPP	579800	00180453	17006728	UNIFORM PANTS/BOOTS VARI POL		07/31/18	265433	601.85-
00001 MID SOUTH UNIFORM & SUPP	579966	00180251	17006835	UNIFORMS/NAME PLATES POLICE		07/31/18	265433	6,700.04-
00001 MID SOUTH UNIFORM & SUPP	580362	00180243	17007032	VESTS/CARRIERS/PLATES POLICE		07/31/18	265433	2,132.40-
00001 MID SOUTH UNIFORM & SUPP	580365	00181152	17007033	GOLD COLLAR INSIGNIA POLICE		07/31/18	265433	276.40-
MID SOUTH UNIFORM & SUPP								
Sum								9,710.69-
00001 MIDSOUTH SOLUTIONS	122793	00181134	17006930	BOOTS RECRUIT CLS #35/STOCK		07/31/18	265434	1,222.50-
MIDSOUTH SOLUTIONS								
Sum								1,222.50-
00001 MIKE MILLER CONSTRUCTION	565673	00180909	17006873	BOARD UP HOUSE 535 W 4TH ST		07/31/18	265435	2,100.00-
00001 MIKE MILLER CONSTRUCTION	565669	00181441	17006959	BOARD UP HOUSE 451 W 4TH ST		07/31/18	265435	2,100.00-
MIKE MILLER CONSTRUCTION								
Sum								4,200.00-
00001 MILES, JR, BRADY	TRAVEL REIMB	00181407	17006941	EXPNS BURN TESTING JKSN ACDMY		07/31/18	265436	49.06-
MILES, JR, BRADY								
Sum								49.06-
00001 MITCHELL TOOL SALES & SE	100086	00180683	17006838	WATER PUMP CONSTR DEPT		07/31/18	265437	315.00-
00001 MITCHELL TOOL SALES & SE	100095	00181092	17006993	BANDSAW BLADES/DRILL BITS		07/31/18	265437	559.00-
MITCHELL TOOL SALES & SE								
Sum								874.00-
00001 MOLLY MAID	SERV 6/18 CI	00181368	17006888	SERV 6/18 CITY HALL		07/31/18	265438	2,870.00-
00001 MOLLY MAID	SERV 6/18 TR	00181368	17006889	SERV 6/18 TRAFFIC		07/31/18	265438	250.00-

00001 MOLLY MAID	SERV 6/18 EN	00181368	17006890	SERV 6/18 ENGR	07/31/18	265438	600.00-
00001 MOLLY MAID	SERV 7/18 CI	00181369	17006891	SERV 7/18 CITY HALL	07/31/18	265438	2,870.00-
00001 MOLLY MAID	SERV 7/18 TR	00181369	17006892	SERV 7/18 TRAFFIC	07/31/18	265438	250.00-
00001 MOLLY MAID	SERV 7/18 EN	00181369	17006893	SERV 7/18 ENGR	07/31/18	265438	600.00-
MOLLY MAID							
Sum							7,440.00-
00001 MS POLICE SUPPLY CO INC	I-2454	00181114	17006909	STREAMLIGHTS POLICE STOCK	07/31/18	265443	3,125.00-
MS POLICE SUPPLY CO INC							
Sum							3,125.00-
00001 MS POWER COMPANY	7/18 GENERAL	00201820	17007003	MNTHLY ELEC-GENERAL	07/31/18	265444	114,742.34-
MS POWER COMPANY							
Sum							114,742.34-
00001 MS STATE DEVELOPMENT AUT	GRANT#R-103-	02018725	17006869	HCL LEVERAGE LENDER, LLC 8/18	07/20/18	112861	10,117.67-
MS STATE DEVELOPMENT AUT							
Sum							10,117.67-
00001 MS TURF	889813	00181199	17006839	GRASS SOD CEMETERIES	07/31/18	265446	115.00-
00001 MS TURF	889816	00181412	17007083	GRASS SOD FOR CEMETERIES	07/31/18	265446	230.00-
MS TURF							
Sum							345.00-
00001 MULTITECH OFFICE MACHINE	18070089	00180923	17006778	INK CARTRIDGES VARI DEPTS	07/31/18	265447	2,414.70-
00001 MULTITECH OFFICE MACHINE	18070281	00180923	17006779	INK CARTIDGES VARI DEPTS	07/31/18	265447	82.95-
00001 MULTITECH OFFICE MACHINE	CM 5467	00180923	17006788	CREDIT	07/31/18	265447	71.96
00001 MULTITECH OFFICE MACHINE	CM 5468	00180923	17006790	CREDIT	07/31/18	265447	795.80
MULTITECH OFFICE MACHINE							
Sum							1,629.89-
00001 MUNN ENTERPRISES INC	48333	00179281	17006945	FUEL CANOPY REPR STORM DAMAGE	07/31/18	265448	30,333.00-
MUNN ENTERPRISES INC							
Sum							30,333.00-
00001 NAPA AUTO PARTS	5930-578313(	00180783	17006943	FIRE MECHANIC SHOP SUPPLIES	07/31/18	265450	56.28-
NAPA AUTO PARTS							
Sum							56.28-
00001 NEEL-SCHAFFER INC	1051229 PH 4	00181462	17007017	SRVS 3/18 DABBS ST SIDEWALK	07/31/18	265451	979.62-
00001 NEEL-SCHAFFER INC	1051229 PH 4	00181464	17007018	SRVS 3/18 HARDY ST PED IMPRVM	07/31/18	265451	1,153.24-
00001 NEEL-SCHAFFER INC	1051229 PH 3	00181467	17007019	SRVS 3/18 38TH AVE SIDEWALK	07/31/18	265451	990.00-
00001 NEEL-SCHAFFER INC	1051228 PH 1	00181469	17007020	SRVS 3/18 CAMP ST CYCLE TRACK	07/31/18	265451	1,243.69-
00001 NEEL-SCHAFFER INC	1051249	00181470	17007021	SRVS 3/18 MS4 STORMWTR PROG	07/31/18	265451	4,583.33-
NEEL-SCHAFFER INC							
Sum							8,949.88-
00001 NELSON, KIRK	TRAVEL REIMB	00181405	17006942	EXPNS BURN TESTING JKSN ACDMY	07/31/18	265452	42.58-
NELSON, KIRK							
Sum							42.58-
00001 NEWELL PAPER COMPANY	4031824	00180866	17006727	JANIT SUPP POLICE DEPT	07/31/18	265453	1,125.05-

00001 NEWELL PAPER COMPANY	4032945	00181357	17007039	PAPER TOWELS PUB WRKS RESTRMS	07/31/18	265453	131.08-
NEWELL PAPER COMPANY							
Sum							1,256.13-
00001 OFFICE DEPOT INC	157933678001	00179713	17006769	OFFICE SUPP ENGR DEPT	07/31/18	265455	71.88-
00001 OFFICE DEPOT INC	157314498001	00180548	17006923	OFFICE SUPP M/ADM	07/31/18	265455	599.29-
00001 OFFICE DEPOT INC	157314499001	00180548	17006924	OFFICE SUPP M/ADM	07/31/18	265455	24.38-
00001 OFFICE DEPOT INC	2206740646	00181215	17007029	COMPUTER SUPP INFO TECH	07/31/18	265455	129.98-
00001 OFFICE DEPOT INC	2206740647	00181215	17007030	COMPUTER SUPP INFO TECH	07/31/18	265455	144.98-
OFFICE DEPOT INC							
Sum							970.51-
00001 OFFICE PRODUCTS PLUS	835611-0 & 8	00180982	17006726	OFFICE/CLEAN SUPP POLICE DEPT	07/31/18	265457	975.34-
00001 OFFICE PRODUCTS PLUS	835715-0	00181047	17006729	OFFICE SUPP P/F ACADEMY	07/31/18	265457	375.54-
00001 OFFICE PRODUCTS PLUS	835127-0	00180878	17006730	JANIT SUPP P/F ACADEMY	07/31/18	265457	137.77-
00001 OFFICE PRODUCTS PLUS	835211-0	00180920	17006732	OFFICE SUPP FIRE ADM	07/31/18	265457	170.79-
00001 OFFICE PRODUCTS PLUS	835755-0	00181064	17006806	OFFICE SUPP FIRE ADM	07/31/18	265457	314.92-
00001 OFFICE PRODUCTS PLUS	835755-1	00181064	17006807	OFFICE SUPP FIRE ADM	07/31/18	265457	25.99-
00001 OFFICE PRODUCTS PLUS	836149-0	00181135	17006842	CHAIR MATS MPO OFFICES	07/31/18	265457	159.98-
00001 OFFICE PRODUCTS PLUS	833597-0(A)	00180394	17006878	OFFICE SUPP MUN COURT	07/31/18	265457	654.59-
00001 OFFICE PRODUCTS PLUS	833597-1	00180394	17006879	OFFICE SUPP MUN COURT	07/31/18	265457	43.16-
00001 OFFICE PRODUCTS PLUS	833597-0(B)	00181346	17006880	ADDL AMT DUE PO#180394	07/31/18	265457	34.18-
00001 OFFICE PRODUCTS PLUS	832068-1	00179999	17007000	OFFICE SUPP MUN COURT	07/31/18	265457	60.27-
00001 OFFICE PRODUCTS PLUS	829604-1	00179258	17007001	JANIT SUPP FIRE DEPT	07/31/18	265457	22.38-
00001 OFFICE PRODUCTS PLUS	837279-0	00181447	17007036	OFFICE/JANIT SUPP FIRE DEPT	07/31/18	265457	217.90-
OFFICE PRODUCTS PLUS							
Sum							3,192.81-
00001 PATTERSON AUTO ELECTRIC	40022	00180640	17006982	A/C REPR U#16641 POLICE	07/31/18	265458	316.98-
PATTERSON AUTO ELECTRIC							
Sum							316.98-
00001 PEARL RIVER VALLEY EPA (	7/18 GENERAL	00201820	17007023	MNTHLY 7/18 PUBLIC SERVICES	07/31/18	265459	1,713.21-
PEARL RIVER VALLEY EPA (							
Sum							1,713.21-
00001 PINE BELT OIL COMPANY IN	10573061	00181195	17006921	GAS FOR FUEL STATION	07/31/18	265461	14,876.06-
00001 PINE BELT OIL COMPANY IN	10560601	00181195	17006922	DIESEL FOR FUEL STATION	07/31/18	265461	6,949.39-
00001 PINE BELT OIL COMPANY IN	6767950	00181479	17007010	REMOTE SITE FUEL CHGS POLICE	07/31/18	265461	17.18-
00001 PINE BELT OIL COMPANY IN	9105218	00181479	17007011	REMOTE SITE FUEL CHGS POLICE	07/31/18	265461	16.83-
00001 PINE BELT OIL COMPANY IN	1045167	00181388	17007025	GAS FOR FUEL STATION	07/31/18	265461	15,033.10-
PINE BELT OIL COMPANY IN							
Sum							36,892.56-
00001 PINNACLE NETWORX, LLC	10042	00179438	17006760	COMPUTERS 10 NEW POLICE UNITS	07/31/18	265463	66,933.70-
PINNACLE NETWORX, LLC							
Sum							66,933.70-
00001 PITTMAN LAW FIRM (LEGAL)	1082	00181474	17007022	SRVS COMSWIP SEWER PHASE V	07/31/18	265464	1,365.00-
PITTMAN LAW FIRM (LEGAL)							
Sum							1,365.00-

00001	PLAY IT AGAIN SPORTS	PO#181417 7/	00181417	17006956	BOXING GLOVES P/F ACDMY TRNG	07/31/18	265466	90.00-
PLAY IT AGAIN SPORTS								
Sum								90.00-
00001	POLICE EQUIPMENT WORLDWI	5228	00167173	17006781	MTRCYCLE PANTS JARVIS POLICE	07/31/18	265467	832.50-
POLICE EQUIPMENT WORLDWI								
Sum								832.50-
00001	POWER HOUSE TOOLS & OUTD	MKB1OJQRB	00180946	17006743	REPR MOWER DAMPERS CEMETERY	07/31/18	265470	192.58-
00001	POWER HOUSE TOOLS & OUTD	MKAZ3F03V	00180720	17006776	REPR PTS U#20227 CEMETERY	07/31/18	265470	283.41-
00001	POWER HOUSE TOOLS & OUTD	MKBAJGVRQ	00181111	17006786	MOWER BELTS CEMETERY	07/31/18	265470	207.96-
POWER HOUSE TOOLS & OUTD								
Sum								683.95-
00001	POWER PLUS INC	65449	00180963	17006744	POLE SAW FOR TREE CREW	07/31/18	265471	449.96-
POWER PLUS INC								
Sum								449.96-
00001	PUCKETT MACHINERY COMPAN	P05C5647924	00180916	17006846	REPR PTS U#18035 PUB WORKS	07/31/18	265472	978.31-
PUCKETT MACHINERY COMPAN								
Sum								978.31-
00001	REGIONS BANK (SANITATION	#001-000801-	02018715	17006789	GARBAGE TRUCK LEASE DUE 7/18	07/17/18	112857	41,376.52-
REGIONS BANK (SANITATION								
Sum								41,376.52-
00001	REGIONS CARDHOLDER SERVI	7079 6/29/18	00179867	17006964	CREDIT JUDGE BLEDSOE 6/13-15	07/31/18	265476	101.92
00001	REGIONS CARDHOLDER SERVI	7079 6/29/18	00178974	17006965	EXPN EATON MML 6/24-27 BILOXI	07/31/18	265476	51.94-
00001	REGIONS CARDHOLDER SERVI	7079 6/29/18	00176774	17006966	FACEBOOK AD JUNE 2018	07/31/18	265476	6.33-
00001	REGIONS CARDHOLDER SERVI	7079 6/29/18	00179727	17006967	HOTEL WILLIAMS 6/3-8 MEMA	07/31/18	265476	570.94-
00001	REGIONS CARDHOLDER SERVI	7079 6/29/18	00180085	17006968	AIR FARE ARCHER CONF 11/10-16	07/31/18	265476	488.60-
00001	REGIONS CARDHOLDER SERVI	7079 6/29/18	00180767	17006969	AIR FARE WILLIAMS 8/12-17	07/31/18	265476	547.60-
00001	REGIONS CARDHOLDER SERVI	7079 6/29/18	00181123	17006970	MEALS WILLIAMS MEMA 6/4-8/18	07/31/18	265476	153.73-
00001	REGIONS CARDHOLDER SERVI	7079 6/29/18	00180284	17006971	HR STAFF FMLA CONF 7/8-9/18	07/31/18	265476	597.00-
00001	REGIONS CARDHOLDER SERVI	7079 6/29/18	00180029	17006972	CLOTH ALLOW ESSARY POLICE	07/31/18	265476	429.14-
00001	REGIONS CARDHOLDER SERVI	7079 6/29/18	00180651	17006973	CLOTH ALLOW SEALY POLICE	07/31/18	265476	795.79-
00001	REGIONS CARDHOLDER SERVI	7079 6/29/18	00180012	17006974	PLUMB SUPP LAKEVW RANGE RSTRM	07/31/18	265476	247.59-
00001	REGIONS CARDHOLDER SERVI	7079 6/29/18	00180096	17006975	TRAV ADV MCLEMORE 6/18-19/18	07/31/18	265476	213.54-
00001	REGIONS CARDHOLDER SERVI	7079 6/29/18	00180122	17006976	TRAV ADV CHIEF PARKER 6/18-19	07/31/18	265476	180.61-
00001	REGIONS CARDHOLDER SERVI	7079 6/29/18	00180376	17006977	SAFETY VESTS LAND CODE DIV	07/31/18	265476	134.94-
00001	REGIONS CARDHOLDER SERVI	7079 6/29/18	00180592	17006978	ASBESTOS MASKS LAND CODE DIV	07/31/18	265476	111.14-
00001	REGIONS CARDHOLDER SERVI	7079 6/29/18	00179655	17006979	MBRSHP JOHNSON ELEC INSPECTOR	07/31/18	265476	190.00-
00001	REGIONS CARDHOLDER SERVI	7079 6/29/18	00179803	17006980	ONLINE CRSE JOHNSON ELEC INSP	07/31/18	265476	85.00-
REGIONS CARDHOLDER SERVI								
Sum								4,701.97-
00001	RICOH CORP	5053831945	00181139	17006751	COPIER 6/18 HUMAN RES	07/31/18	265477	94.10-
00001	RICOH CORP	5053761300	00181162	17006754	PRODUCTION PRINTER CHARGES	07/31/18	265477	769.12-
00001	RICOH CORP	30359386	00181284	17006832	COPIER 7/15-8/14 HUMAN RES	07/31/18	265477	221.67-
RICOH CORP								
Sum								1,084.89-

00001 RJ YOUNG COMPANY	INV2551863	00181172	17006761	COPIER 5/28-6/27 P/F ACADEMY	07/31/18	265479	236.00-
00001 RJ YOUNG COMPANY	INV2551864	00181181	17006809	COPIER 5/28-6/27 FIRE DEPT	07/31/18	265479	194.00-
00001 RJ YOUNG COMPANY	INV2556602	00181251	17006823	COPIER 5/28-6/27 DETECTIVES	07/31/18	265479	951.68-
00001 RJ YOUNG COMPANY	INV2566379	00181311	17006852	COPIER 6/6-7/5 PLANNING DIV	07/31/18	265479	369.00-
00001 RJ YOUNG COMPANY	INV2548077	00181365	17006881	COPIER 5/24-6/23 MUN COURT	07/31/18	265479	188.50-
00001 RJ YOUNG COMPANY	INV2548076	00181366	17006882	COPIER 5/25-6/24 MUN COURT	07/31/18	265479	496.53-
00001 RJ YOUNG COMPANY	INV2582317	00181430	17006954	GIS PLOTTER 6/17-7/16/18	07/31/18	265479	132.67-
00001 RJ YOUNG COMPANY	INV2580338	00181431	17006955	COPIER 6/16-7/15 MPO DIV	07/31/18	265479	174.00-
RJ YOUNG COMPANY							
Sum							2,742.38-
00001 ROBINSON ELECTRIC SUPPLY	2899-418939	00180901	17006811	ELEC TIES CONSTR DEPT	07/31/18	265481	35.50-
ROBINSON ELECTRIC SUPPLY							
Sum							35.50-
00001 RODCO, LLC	1487	00181443	17006960	BLDG PLAN REVIEW 6308 HWY 98	07/31/18	265482	665.05-
RODCO, LLC							
Sum							665.05-
00001 ROGERS, KEVIN	TITLE OPINIO	00181440	17006958	TITLE OPINION 3818 EAGLE DR	07/31/18	265483	250.00-
ROGERS, KEVIN							
Sum							250.00-
00001 ROSE'S QUIK STOP	PO#181185 7/	00181185	17006808	MEALS PROMO EVALUATORS FIRE	07/31/18	265485	66.00-
00001 ROSE'S QUIK STOP	PO#181275 7/	00181275	17006844	MEALS PROMO EVALUATORS FIRE	07/31/18	265485	77.00-
00001 ROSE'S QUIK STOP	PO#181228 7/	00181228	17006871	MEALS PROMO EVALUATORS FIRE	07/31/18	265485	66.00-
ROSE'S QUIK STOP							
Sum							209.00-
00001 SCOTTS HYDRAULIC SERVICE	33830	00181110	17006785	REPRS U#15892 SANIT	07/31/18	265487	1,317.14-
00001 SCOTTS HYDRAULIC SERVICE	33965 LABOR	00181379	17007054	LABOR CHG U#11353	07/31/18	265487	617.50-
SCOTTS HYDRAULIC SERVICE							
Sum							1,934.64-
00001 SHERWIN-WILLIAMS COMPANY	2234-4	00180621	17006752	PAINT MACHINE REPR TRAFFIC	07/31/18	265488	187.49-
SHERWIN-WILLIAMS COMPANY							
Sum							187.49-
00001 SOLAR SUPPLY INC	3405481	00181028	17006841	A/C UNIT INFO TECH DEPT	07/31/18	265491	4,479.98-
SOLAR SUPPLY INC							
Sum							4,479.98-
00001 SOUTHERN FINANCIAL SYSTE	CMCHAT2 6/28	02018738	17007005	POLICE FINES COLL.FEE	07/31/18	265492	181.94-
00001 SOUTHERN FINANCIAL SYSTE	CMCHAT3 6/28	02018739	17007006	POLICE FINES COLL.FEE	07/31/18	265492	742.61-
SOUTHERN FINANCIAL SYSTE							
Sum							924.55-
00001 SOUTHERN PINE ELECTRIC P	7/18 GENERAL	00201816	17006920	MNTHLY 7/18 PUBLIC SERVICES	07/31/18	265495	1,311.37-
SOUTHERN PINE ELECTRIC P							
Sum							1,311.37-
00001 SOUTHERN TIRE MART LLC	11136376	00174127	17006855	TIRES U#18098 FIRE DEPT	07/31/18	265497	2,698.32-

SOUTHERN TIRE MART LLC								
Sum								2,698.32-
00001	SOUTHGROUP (HATTIESBURG	HATTIES-02 9	00181176	17006758	RENEWAL OF AIRPORT LIABILITY	07/31/18	265498	1,045.00-
00001	SOUTHGROUP (HATTIESBURG	HATTIES-02 1	00181341	17006853	NOTARY BOND LISA JOLLY	07/31/18	265498	100.00-
00001	SOUTHGROUP (HATTIESBURG	HATTIES-02 1	00181343	17006894	POSITION BOND JASMYNE HYATT	07/31/18	265498	100.00-
SOUTHGROUP (HATTIESBURG								
Sum								1,245.00-
00001	SOUTHGROUP (HATTIESBURG	HATTIES-03 1	00181174	17006756	RENEWAL OF GENERAL LIABILITY	07/31/18	265499	868.72-
00001	SOUTHGROUP (HATTIESBURG	HATTIES-03 1	00181175	17006757	RENEWAL OF UMBRELLA POLICY	07/31/18	265499	911.63-
SOUTHGROUP (HATTIESBURG								
Sum								1,780.35-
00001	SPIRE ENERGY	7/18 GENERAL	00201820	17007024	MNTHLY GAS-GENERAL	07/31/18	265501	183.84-
SPIRE ENERGY								
Sum								183.84-
00001	STANDARD OFFICE SUPPLY C	0078248-001	00181153	17006803	RECEIVER PAPER ACCTG DEPT	07/31/18	265502	109.40-
00001	STANDARD OFFICE SUPPLY C	0078250-001	00181154	17006830	OFFICE SUPP CITY COUNCIL	07/31/18	265502	606.00-
STANDARD OFFICE SUPPLY C								
Sum								715.40-
00001	STAPLES	3382055144	00180707	17006724	COPY PAPER PLANNING DIV	07/31/18	265503	167.90-
00001	STAPLES	3382055147	00180715	17006725	COPY PAPER MPO DIVISION	07/31/18	265503	128.58-
00001	STAPLES	3382055145	00180714	17006837	OFFICE SUPP LAND CODE DIV	07/31/18	265503	89.68-
00001	STAPLES	3382284043	00180714	17006840	CREDIT RETURN	07/31/18	265503	11.20
00001	STAPLES	3384698230	00181372	17007026	LOLLIPOPS NNO EXHIBIT URBAN D	07/31/18	265503	19.41-
00001	STAPLES	3384698231	00181372	17007027	CANDY NNO EXHIBIT URBAN DEV	07/31/18	265503	12.44-
STAPLES								
Sum								406.81-
00001	TAW POWER SYSTEMS, INC	26142042	00181252	17006816	GENERATOR SERV CALL POLICE	07/31/18	265506	420.00-
TAW POWER SYSTEMS, INC								
Sum								420.00-
00001	THYSSENKRUPP ELEVATOR CO	6000315906	00178665	17006745	INSTALL ADA PHONE PINE ST ELV	07/31/18	265509	3,084.00-
THYSSENKRUPP ELEVATOR CO								
Sum								3,084.00-
00001	TOP NOTCH EMBROIDERY	355	00179929	17006990	SHIRTS/COATS THOMAS TRAFFIC	07/31/18	265511	281.92-
00001	TOP NOTCH EMBROIDERY	347	00179902	17006994	SHIRTS/RAINCOAT TYLER SANIT	07/31/18	265511	108.97-
00001	TOP NOTCH EMBROIDERY	346	00179922	17007031	CITY APPAREL URBAN D DIRECTOR	07/31/18	265511	200.95-
00001	TOP NOTCH EMBROIDERY	358	00181298	17007038	UNIFORM POLOS K LASTER LDC	07/31/18	265511	104.97-
00001	TOP NOTCH EMBROIDERY	361	00179981	17007053	CITY APPAREL P/W STREET DEPT	07/31/18	265511	544.85-
TOP NOTCH EMBROIDERY								
Sum								1,241.66-
00001	TRUCKPRO LLC	039-0636201	00173909	17006985	REPR PTS U#13560 FIRE DEPT	07/31/18	265515	82.18-
00001	TRUCKPRO LLC	039-0636372	00174027	17006986	REPR PTS U#13933 FIRE DEPT	07/31/18	265515	25.77-
00001	TRUCKPRO LLC	039-0646519	00178972	17006987	REPR PTS U#13932 FIRE DEPT	07/31/18	265515	314.56-
00001	TRUCKPRO LLC	039-0646521	00178972	17006988	REPR PTS U#13932 FIRE DEPT	07/31/18	265515	190.38-

00001 TRUCKPRO LLC	039-0646524	00178972	17006989	REPR PTS U#13932 FIRE DEPT	07/31/18	265515	3,845.07-
TRUCKPRO LLC							
Sum							4,457.96-
00001 TYLER TECHNOLGIES INC	025-229363	00181442	17006948	ENERGOV UPGRADE 6/18 PLANNING	07/31/18	265516	1,618.75-
00001 TYLER TECHNOLGIES INC	025-229362	00181442	17006949	ENERGOV UPGRADE 6/18 PLANNING	07/31/18	265516	525.00-
TYLER TECHNOLGIES INC							
Sum							2,143.75-
00001 UNDERWOOD OUTDOOR POWER,	61868	00181331	17006918	2 CYCLE OIL MIX CEMETERY	07/31/18	265517	178.56-
00001 UNDERWOOD OUTDOOR POWER,	61705	00181501	17007014	REPRS U#18046 CUB CADET ACDMY	07/31/18	265517	882.61-
UNDERWOOD OUTDOOR POWER,							
Sum							1,061.17-
00001 UNITED FENCE COMPANY	00019113	00180001	17006870	CHAIN LINK FENCE POLICE DEPT	07/31/18	265518	3,686.00-
00001 UNITED FENCE COMPANY	00019114	00181250	17007035	FENCING/GATE POLICE DEPT	07/31/18	265518	486.00-
UNITED FENCE COMPANY							
Sum							4,172.00-
00001 UNITED STATES TREASURY/I	PCORI FEE PL	00181253	17006801	PCORI FEE PLAN YEAR 2017	07/17/18	112859	2,067.90-
UNITED STATES TREASURY/I							
Sum							2,067.90-
00001 UNIVERSITY TIRE & SERVIC	529692	00181065	17006782	TIRES POLICE STOCK	07/31/18	265519	2,315.14-
00001 UNIVERSITY TIRE & SERVIC	530461	00181552	17007078	TIRES U#11740 SANIT	07/31/18	265519	291.16-
UNIVERSITY TIRE & SERVIC							
Sum							2,606.30-
00001 WAL-MART STORES INC	009666	00181042	17006904	SCHOOL SUPP NNO KICK-OFF	07/31/18	265525	1,144.40-
WAL-MART STORES INC							
Sum							1,144.40-
00001 WATERS INTERNATIONAL TRU	08P856766	00181133	17006784	REPR PTS U #16009 PUB WORKS	07/31/18	265527	97.22-
WATERS INTERNATIONAL TRU							
Sum							97.22-
00001 WHEELER'S JANITORIAL SUP	0402511	00180344	17006771	WORK SHIRTS BRITTON SANIT	07/31/18	265529	75.00-
00001 WHEELER'S JANITORIAL SUP	0402510	00180060	17006772	WORK SHIRTS MCCLAIN/FRAZIER	07/31/18	265529	175.00-
WHEELER'S JANITORIAL SUP							
Sum							250.00-
00001 98 WASTE LLC	1357	00181319	17006862	RUBBISH DISPOSAL SANIT	07/31/18	265532	10,934.00-
98 WASTE LLC							
Sum							10,934.00-
Sum							1,932,546.13-

CITY OF HATTIESBURG
DOCKET OF CLAIMS
PERIOD ENDING JULY 31, 2018

Date - 07/27/18

Vendor	Invoice Number	Purchase Order	Claims Number	Item Description	Check Date	Check No.	Check Amount
PARKS & RECREATION FUND							
00002 A & R FARM AND GARDEN	301029	00181169	17001524	BUNGEE CORD GRNDS MAINT	07/31/18	265285	23.92-
A & R FARM AND GARDEN							
Sum							23.92-
00002 ADAMS NURSERY	388712	00179506	17001521	FERNS GRNDS MAINT	07/31/18	265289	77.70-
00002 ADAMS NURSERY	875006	00180840	17001522	RPLCMNT PLANTS MAMIE ST	07/31/18	265289	101.70-
ADAMS NURSERY							
Sum							179.40-
00002 ADCOCK POOLS AND SPA	107926	00180951	17001497	POOL CHEMICALS	07/31/18	265290	1,499.90-
00002 ADCOCK POOLS AND SPA	107052	00180403	17001526	CHEMICALS ALL CITY POOLS	07/31/18	265290	1,049.86-
ADCOCK POOLS AND SPA							
Sum							2,549.76-
00002 AGRI-AFC LLC	5483493	00181058	17001492	WEED KILLER GRNDS MAINT	07/31/18	265292	152.00-
AGRI-AFC LLC							
Sum							152.00-
00002 AT&T MOBILITY	287273578351	00181116	17001491	WIRELESS SRV 6/18 PKS/REC	07/31/18	265307	417.14-
AT&T MOBILITY							
Sum							417.14-
00002 BLUE DOLPHIN POOLS	33485	00181107	17001500	POOL PUMP REPR CE ROY CENTER	07/31/18	265314	2,793.26-
BLUE DOLPHIN POOLS							
Sum							2,793.26-
00002 BRACKMAN MOWER WAREHOUSE	39953	00181059	17001493	WEEDEATER REPR PTS	07/31/18	265319	490.00-
00002 BRACKMAN MOWER WAREHOUSE	40141	00181221	17001507	REPRS U#15517 MOWER	07/31/18	265319	269.80-
00002 BRACKMAN MOWER WAREHOUSE	40140	00181222	17001508	REPRS U#19465 MOWER	07/31/18	265319	195.85-
00002 BRACKMAN MOWER WAREHOUSE	40136	00181218	17001510	REPRS U#18866 MOWER	07/31/18	265319	82.00-
00002 BRACKMAN MOWER WAREHOUSE	40129	00181219	17001511	REPRS U#19464 MOWER	07/31/18	265319	411.28-
00002 BRACKMAN MOWER WAREHOUSE	40142	00181220	17001512	REPRS U#18867 MOWER	07/31/18	265319	152.42-
00002 BRACKMAN MOWER WAREHOUSE	40138	00181223	17001513	REPRS U#19303 MOWER	07/31/18	265319	82.00-
00002 BRACKMAN MOWER WAREHOUSE	40241	00181327	17001517	LUBRICANTS GRNDS MAINT	07/31/18	265319	158.00-
BRACKMAN MOWER WAREHOUSE							
Sum							1,841.35-
00002 CITY OF HATTIESBURG FUND	TRF 2ND 7/18	02018723	17001501	TRF 2ND 7/18 PAYROLL	07/18/18	311948	90,189.24-
CITY OF HATTIESBURG FUND							
Sum							90,189.24-
00002 CLEMTS HARDWARE	120987	00180884	17001545	TENTS/COOLER/FAN NNO SUPPLIES	07/31/18	265341	864.00-
00002 CLEMTS HARDWARE	121102	00181475	17001551	ROPE/SNAPS CE ROY CENTER	07/31/18	265341	34.98-
CLEMTS HARDWARE							

Sum							898.98-
00002 COMSOUTH	189423	00181127	17001548	RADIO REPR U#468	07/31/18	265346	75.00-
COMSOUTH							
Sum							75.00-
00002 EATON, ALVIN K (PETTY CA	PETTY CASH 6	00181508	17001550	PETTY CASH 6/18 PARKS & REC	07/31/18	265358	14.25-
EATON, ALVIN K (PETTY CA							
Sum							14.25-
00002 ECONOMY SUPPLY CO	298814	00181157	17001499	BLDG MATLS CHAIN PARK	07/31/18	265360	35.50-
00002 ECONOMY SUPPLY CO	299274	00181224	17001546	BALLFIELD CHALK	07/31/18	265360	567.20-
ECONOMY SUPPLY CO							
Sum							602.70-
00002 ESTERS, WILLARD (BUTCH)	OFFICIAL 6/2	02018736	17001529	OFFICIAL-ADULT SOFTBALL	07/31/18	265365	580.00-
ESTERS, WILLARD (BUTCH)							
Sum							580.00-
00002 FASTENAL COMPANY	MSHAT210645	00180789	17001518	SWING SET BOLTS EASTSIDE PK	07/31/18	265366	54.96-
FASTENAL COMPANY							
Sum							54.96-
00002 FITFINEFABULOUS LLC	001	00181126	17001494	URBAN LINE DANCE CLASSES	07/31/18	265368	480.00-
FITFINEFABULOUS LLC							
Sum							480.00-
00002 GOLDEN, NICHOLAS D	OFFICIAL 6/2	02018736	17001528	OFFICIAL-ADULT SOFTBALL	07/31/18	265379	80.00-
GOLDEN, NICHOLAS D							
Sum							80.00-
00002 HAVARD PEST CONTROL INC	1308041	02018733	17001552	QTRLY SERV BOYS BROTHERHD	07/31/18	265394	48.00-
00002 HAVARD PEST CONTROL INC	1308042	02018733	17001553	QTRLY SERV CAMERON FLD	07/31/18	265394	48.00-
00002 HAVARD PEST CONTROL INC	1308033	02018733	17001554	QTRLY SERV DAHMER POOL	07/31/18	265394	48.00-
00002 HAVARD PEST CONTROL INC	1308035	02018733	17001555	QTRLY SERV TATUM PARK	07/31/18	265394	125.00-
HAVARD PEST CONTROL INC							
Sum							269.00-
00002 KEELING COMPANY (HATTIES	S3377003.001	00179142	17001496	SPRINKLER PTS TATUM BALLFLDS	07/31/18	265416	73.11-
KEELING COMPANY (HATTIES							
Sum							73.11-
00002 KETTLEY, ANNETTE	SPORTS SERVS	02018735	17001537	SPORTS SUPPORT SERVICES	07/31/18	265418	160.00-
KETTLEY, ANNETTE							
Sum							160.00-
00002 KINNEL, ISAAC L	OFFICIAL 6/2	02018736	17001530	OFFICIAL-ADULT SOFTBALL	07/31/18	265419	260.00-
KINNEL, ISAAC L							
Sum							260.00-
00002 MCELHANEY PLUMBING INC	269343	00181204	17001509	PLUMB SUPP TATUM PARK	07/31/18	265429	43.93-
MCELHANEY PLUMBING INC							

Sum							43.93-
00002 MCSWAIN, JEFFERY (REFUND	EASTSIDE REN	02018726	17001505	EASTSIDE RENT RFD #71621	07/31/18	265430	80.00-
MCSWAIN, JEFFERY (REFUND							
Sum							80.00-
00002 MORRIS, GEORGE T	OFFICIAL 6/2	02018736	17001532	OFFICIAL-ADULT SOFTBALL	07/31/18	265440	240.00-
MORRIS, GEORGE T							
Sum							240.00-
00002 MOTT, ANDREW	OFFICIAL 6/2	02018736	17001531	OFFICIAL-ADULT SOFTBALL	07/31/18	265441	120.00-
MOTT, ANDREW							
Sum							120.00-
00002 MS AMATEUR SOFTBALL ASSN	ADULT SOFTBA	00181401	17001519	ADULT SOFTBALL REG FEE 2018	07/31/18	265442	900.00-
MS AMATEUR SOFTBALL ASSN							
Sum							900.00-
00002 MS POWER COMPANY	7/18 PKS/REC	00201820	17001527	MNTHLY ELEC-PARKS & REC	07/31/18	265444	14,069.34-
MS POWER COMPANY							
Sum							14,069.34-
00002 NEEL-SCHAFFER INC	1051229 PH 4	00177047	17001520	SERVS MT OLIVE CEMETERY/PARK	07/31/18	265451	1,274.64-
00002 NEEL-SCHAFFER INC	1051229 PH 3	00181466	17001542	SRVS 3/18 TATUM SOCCER LIGHTS	07/31/18	265451	1,031.92-
00002 NEEL-SCHAFFER INC	1051229 PH 3	00181465	17001543	SRVS 3/18 SULLIVAN PK PAVILN	07/31/18	265451	1,253.41-
NEEL-SCHAFFER INC							
Sum							3,559.97-
00002 OFFICE DEPOT INC	2206740648	00181203	17001549	LAPTOP/WARRANTY PERKINS	07/31/18	265455	434.99-
OFFICE DEPOT INC							
Sum							434.99-
00002 POWELL, RANDY	SPORTS SERVS	02018735	17001538	SPORTS SUPPORT SERVICES	07/31/18	265469	224.00-
POWELL, RANDY							
Sum							224.00-
00002 REESE, KRISTIN (REFUNDS)	SUMMER CAMP	02018714	17001490	SUMMER CAMP REF #71389	07/31/18	265474	70.00-
REESE, KRISTIN (REFUNDS)							
Sum							70.00-
00002 RJ YOUNG COMPANY	INV2559144	00181255	17001504	TONER SUPP REC ADM	07/31/18	265479	37.50-
RJ YOUNG COMPANY							
Sum							37.50-
00002 SMITH, CARLTON L	OFFICIAL 6/2	02018736	17001533	OFFICIAL-ADULT SOFTBALL	07/31/18	265490	420.00-
SMITH, CARLTON L							
Sum							420.00-
00002 SOUTHERN MS PINE STRAW	11367	00181382	17001523	PINE STRAW NNO CE ROY CNTR	07/31/18	265493	165.00-
SOUTHERN MS PINE STRAW							
Sum							165.00-
00002 SOUTHERN ON SITE STORAGE	60789	00181256	17001514	PORTALETS TATUM TENNIS	07/31/18	265494	235.00-

00002 SOUTHERN ON SITE STORAGE	60790	00181301	17001515	PORTALETS TATUM SOCCER	07/31/18	265494	235.00-
SOUTHERN ON SITE STORAGE							
Sum							470.00-
00002 SPIRE ENERGY	7/18 PKS/REC	00201820	17001544	MNTHLY GAS-PARKS & REC	07/31/18	265501	25.73-
SPIRE ENERGY							
Sum							25.73-
00002 TROTTER, COREY	OFFICIAL 6/2	02018736	17001535	OFFICIAL-ADULT SOFTBALL	07/31/18	265513	480.00-
TROTTER, COREY							
Sum							480.00-
00002 TROTTER, WILLIE	OFFICIAL 6/2	02018736	17001536	OFFICIAL-ADULT SOFTBALL	07/31/18	265514	435.00-
TROTTER, WILLIE							
Sum							435.00-
00002 UNITED FENCE COMPANY	00019108	00181216	17001502	GATE REPAIR DOG PARK	07/31/18	265518	85.00-
00002 UNITED FENCE COMPANY	00019107	00181216	17001503	KEYPAD REPR GRNDS MAINT	07/31/18	265518	186.09-
UNITED FENCE COMPANY							
Sum							271.09-
00002 VARNADO, ALEXANDRIA	SPORTS SERVS	02018735	17001539	SPORTS SUPPORT SERVICES	07/31/18	265520	192.00-
VARNADO, ALEXANDRIA							
Sum							192.00-
00002 VARNADO, UNDRA	SPORTS SERVS	02018735	17001540	SPORTS SUPPORT SERVICES	07/31/18	265521	280.00-
VARNADO, UNDRA							
Sum							280.00-
00002 VASQUEZ, LINDA M	OFFICIAL 6/2	02018736	17001534	OFFICIAL-ADULT SOFTBALL	07/31/18	265522	380.00-
VASQUEZ, LINDA M							
Sum							380.00-
00002 VESCO TENNIS COURTS INC	589	00177860	17001525	RESURFACE DAHMER TENNIS COURT	07/31/18	265524	12,790.00-
VESCO TENNIS COURTS INC							
Sum							12,790.00-
00002 WAL-MART STORES INC	009522	00180516	17001516	SUMMER CAMP SUPPLIES	07/31/18	265525	195.92-
WAL-MART STORES INC							
Sum							195.92-
00002 WHEELER, CURTIS	SPORTS SERVS	02018735	17001541	SPORTS SUPPORT SERVICES	07/31/18	265528	96.00-
WHEELER, CURTIS							
Sum							96.00-
00002 WILLIAMS, MICHELLE K	AQUATIC SERV	00181150	17001495	AQUATIC SERVS 7/18	07/31/18	265530	3,000.00-
00002 WILLIAMS, MICHELLE K	001 PO#18134	00181344	17001506	AQUATIC SERVS 7/18	07/31/18	265530	3,000.00-
WILLIAMS, MICHELLE K							
Sum							6,000.00-
Sum							143,674.54-

CITY OF HATTIESBURG
DOCKET OF CLAIMS
PERIOD ENDING JULY 31, 2018

Date - 07/27/18

Vendor	Invoice Number	Purchase Order	Claims Number	Item Description	Check Date	Check No.	Check Amount
HATT.MUNICIPAL FIRE PROTECTION							
00005 AUTOMOTIVE GLASS SPECIAL	I223864(B)	00181345	17000133	ADDL AMT DUE PO#180774	07/31/18	265310	117.00-
AUTOMOTIVE GLASS SPECIAL							
Sum							117.00-
00005 EMERGENCY EQUIPMENT PROF	435939	00180974	17000132	REPR PTS U#15064	07/31/18	265361	349.72-
00005 EMERGENCY EQUIPMENT PROF	435925	00181211	17000135	REPR PTS U#13933	07/31/18	265361	19.35-
00005 EMERGENCY EQUIPMENT PROF	436073	00181225	17000137	REPR PTS U#23932/13933/14517	07/31/18	265361	250.22-
EMERGENCY EQUIPMENT PROF							
Sum							619.29-
00005 NAPA AUTO PARTS	5930-578313(	00180783	17000134	FIRE MECHANIC SHOP SUPPLIES	07/31/18	265450	80.75-
00005 NAPA AUTO PARTS	5930-579157	00181193	17000136	REPR PTS U#19835	07/31/18	265450	217.28-
NAPA AUTO PARTS							
Sum							298.03-
00005 ROPER SUPPLY CO LLC	50846	00181277	17000138	REPR PTS U#19835	07/31/18	265484	75.00-
ROPER SUPPLY CO LLC							
Sum							75.00-
00005 SCOTTS HYDRAULIC SERVICE	33965	00181379	17000140	REPRS U#11353	07/31/18	265487	541.08-
SCOTTS HYDRAULIC SERVICE							
Sum							541.08-
00005 TRUSTMARK NATIONAL BANK/	A/C#27335025	02018719	17000130	FIRE TRUCK LEASE NOTE#40263	07/17/18	22131	5,836.57-
00005 TRUSTMARK NATIONAL BANK/	A/C #2840110	02018734	17000139	FIRE TRUCK LEASE NOTE 33523	07/26/18	22133	14,340.99-
TRUSTMARK NATIONAL BANK/							
Sum							20,177.56-
Sum							21,827.96-

CITY OF HATTIESBURG
DOCKET OF CLAIMS
PERIOD ENDING JULY 31, 2018

Date - 07/27/18

Vendor	Invoice Number	Purchase Order	Claims Number	Item Description	Check Date	Check No.	Check Amount
PAYROLL FUND							
00006 SOUTHERN FINANCIAL SYSTE	9891	02018148	17000487	GARNISHMENT	07/24/18	112884	15.97-
SOUTHERN FINANCIAL SYSTE							
Sum							15.97-
00006 STATE DISBURSEMENT UNIT	1001	02018147	17000478	CHILD SUPPORT	07/24/18	112875	234.00-
STATE DISBURSEMENT UNIT							
Sum							234.00-
Sum							249.97-

CITY OF HATTIESBURG
DOCKET OF CLAIMS
PERIOD ENDING JULY 31, 2018

Date - 07/27/18

Vendor	Invoice Number	Purchase Order	Claims Number	Item Description	Check Date	Check No.	Check Amount
WATER & SEWER OPERATION/MAINT.							
00009 ARNOLD LINE WATER ASSN I	101414	00181112	17001432	SEWER BILLING 4/18-6/18	07/31/18	265300	405.00-
ARNOLD LINE WATER ASSN I							
Sum							405.00-
00009 AT&T MOBILITY	287273578351	00181116	17001433	WIRELESS SRV 6/18 W&SO&M	07/31/18	265307	706.01-
00009 AT&T MOBILITY	287273861504	00181118	17001434	GPS TRACKING 6/18 WTR PLANT	07/31/18	265307	344.93-
AT&T MOBILITY							
Sum							1,050.94-
00009 AUTO ARMATURE SERVICE IN	13040	00181094	17001438	BATTERY U#13512 TRANS	07/31/18	265308	136.95-
00009 AUTO ARMATURE SERVICE IN	13032	00181099	17001469	BATTERY U#20108 TRANS DEPT	07/31/18	265308	187.95-
AUTO ARMATURE SERVICE IN							
Sum							324.90-
00009 BLOSSMAN GAS INC	4362924	00181069	17001443	PROPANE FOR PLANT FORKLIFT	07/31/18	265313	104.00-
BLOSSMAN GAS INC							
Sum							104.00-
00009 BODY TECH INC	4760 PO#1811	00181151	17001476	REPRS U#13512 PLANT	07/31/18	265315	174.54-
00009 BODY TECH INC	4760 PO#1812	00181209	17001477	REPRS U#13512 PLANT	07/31/18	265315	1,322.70-
00009 BODY TECH INC	4760 PO#1809	00180969	17001479	REPRS U#13512 SEWER	07/31/18	265315	2,003.89-
00009 BODY TECH INC	4760 PO#1811	00181148	17001515	REPRS U#13510 WTR PLANT	07/31/18	265315	2,205.31-
00009 BODY TECH INC	4760 PO#1814	00181484	17001516	REPRS U#13510 WTR PLANT	07/31/18	265315	573.33-
00009 BODY TECH INC	4760 PO#1809	00180968	17001518	REPRS U#13510 SEWER	07/31/18	265315	2,764.00-
BODY TECH INC							
Sum							9,043.77-
00009 BONNER ANALYTICAL TESTIN	66410	00181190	17001448	COLIFORM TESTS VARI LOC	07/31/18	265316	636.00-
00009 BONNER ANALYTICAL TESTIN	66368	00181234	17001460	NPDES MONITORING 6/18-7/18	07/31/18	265316	2,250.34-
BONNER ANALYTICAL TESTIN							
Sum							2,886.34-
00009 BRACKMAN MOWER WAREHOUSE	40176	00181267	17001468	MOWER BLADES WTR PLANTS	07/31/18	265319	84.00-
BRACKMAN MOWER WAREHOUSE							
Sum							84.00-
00009 CARQUEST AUTO PARTS STOR	14758-111654	00181122	17001445	REPR PTS U#19845 PLANT	07/31/18	265327	317.28-
00009 CARQUEST AUTO PARTS STOR	14758-111799	00181187	17001463	REPR PTS U#20056 TRANS	07/31/18	265327	31.99-
00009 CARQUEST AUTO PARTS STOR	14758-112132	00181445	17001505	REPR PTS U#13080 SEWER	07/31/18	265327	205.72-
00009 CARQUEST AUTO PARTS STOR	14758-112209	00181423	17001506	REPR PTS U#19777 LAGOON	07/31/18	265327	21.42-
CARQUEST AUTO PARTS STOR							
Sum							576.41-
00009 CENTRAL PIPE SUPPLY INC	S100144773.0	00180551	17001436	PLUMB SUPP TRANS STOCK	07/31/18	265328	2,635.80-
00009 CENTRAL PIPE SUPPLY INC	S100144773.0	00180551	17001437	PLUMB SUPP TRANS STOCK	07/31/18	265328	1,100.40-

00009	CENTRAL PIPE SUPPLY INC	S100145485.0	00180695	17001466	CURB STOPS TRANS DEPT STOCK	07/31/18	265328	3,669.18-
00009	CENTRAL PIPE SUPPLY INC	S100145485.0	00180695	17001467	CURB STOPS TRANS DEPT STOCK	07/31/18	265328	355.38-
CENTRAL PIPE SUPPLY INC								
Sum								7,760.76-
00009	CERTIFIED LABORATORIES	3195581	00180952	17001456	CHEMICALS SEWER DEPT	07/31/18	265329	13,926.00-
CERTIFIED LABORATORIES								
Sum								13,926.00-
00009	CINTAS CORPORATION #J66	J66596664	00181210	17001449	UNIFORMS 7/16 TRANS	07/31/18	265333	79.36-
00009	CINTAS CORPORATION #J66	J66596665	00181210	17001450	MOP/MAT 7/16 PLANT	07/31/18	265333	13.93-
00009	CINTAS CORPORATION #J66	J66596664	00181210	17001451	UNIFORMS 7/16 PLANT	07/31/18	265333	46.87-
00009	CINTAS CORPORATION #J66	J66596664	00181210	17001452	UNIFORMS 7/16 SEWER	07/31/18	265333	43.02-
00009	CINTAS CORPORATION #J66	J66596664	00181210	17001453	UNIFORMS 7/16 LAGOON	07/31/18	265333	25.87-
00009	CINTAS CORPORATION #J66	J6657848	00181400	17001484	UNIFORMS 7/23 TRANS	07/31/18	265333	79.36-
00009	CINTAS CORPORATION #J66	J66597849	00181400	17001485	MOP/MAT 7/23 PLANT	07/31/18	265333	13.93-
00009	CINTAS CORPORATION #J66	J66597848	00181400	17001486	UNIFORMS 7/23 PLANT	07/31/18	265333	46.87-
00009	CINTAS CORPORATION #J66	J66597848	00181400	17001487	UNIFORMS 7/23 SEWER	07/31/18	265333	43.02-
00009	CINTAS CORPORATION #J66	J66597848	00181400	17001488	UNIFORMS 7/23 LAGOON	07/31/18	265333	25.87-
CINTAS CORPORATION #J66								
Sum								418.10-
00009	CINTAS FIRST AID J71	5011174475	00181014	17001447	FIRST AID SUPP WTR PLANT	07/31/18	265334	129.51-
00009	CINTAS FIRST AID J71	5010645568	00179248	17001492	NITRILE GLOVES FOR WAREHOUSE	07/31/18	265334	91.44-
00009	CINTAS FIRST AID J71	5010645599	00178793	17001493	FIRST AID SUPP PLT ADM BLDG	07/31/18	265334	105.05-
CINTAS FIRST AID J71								
Sum								326.00-
00009	CITY OF HATTIESBURG FUND	TRF 2ND 7/18	02018723	17001457	TRF 2ND 7/18 PAYROLL	07/18/18	22132	93,280.19-
CITY OF HATTIESBURG FUND								
Sum								93,280.19-
00009	COBURN'S SUPPLY CO INC	601325662	00180953	17001474	PLUMB SUPP TRANS DEPT STOCK	07/31/18	265342	4,335.36-
00009	COBURN'S SUPPLY CO INC	601356617	00181192	17001475	PLUMB SUPP TRANS DEPT STOCK	07/31/18	265342	2,317.92-
COBURN'S SUPPLY CO INC								
Sum								6,653.28-
00009	COMSOUTH	189850	00181517	17001503	RADIO REPR WTR BILLING	07/31/18	265346	75.00-
00009	COMSOUTH	189908	00181517	17001504	RADIO REPR WTR BILLING	07/31/18	265346	94.95-
COMSOUTH								
Sum								169.95-
00009	CONTROL SYSTEMS INC	55827	00181208	17001465	RELAY BOARDS BURKETT LIFT STA	07/31/18	265348	525.00-
00009	CONTROL SYSTEMS INC	55835	00181296	17001470	PUMP EQUIP PTS LAGOONS STOCK	07/31/18	265348	3,200.00-
CONTROL SYSTEMS INC								
Sum								3,725.00-
00009	D P C ENTERPRISES LP	212001363-18	00180800	17001439	CHLORINE FORREST GEN TANK	07/31/18	265349	1,371.00-
00009	D P C ENTERPRISES LP	212001364-18	00180800	17001440	CHLORINE WESLEY TANK	07/31/18	265349	914.00-
00009	D P C ENTERPRISES LP	212001476-18	00181188	17001498	CHEMICALS NORTH LAGOON	07/31/18	265349	2,091.00-
00009	D P C ENTERPRISES LP	212001477-18	00181188	17001499	CHEMICALS SOUTH LAGOON	07/31/18	265349	2,617.00-

D P C ENTERPRISES LP

Sum							6,993.00-
00009 DICK'S SPORTING GOODS	114261	00181271	17001496	SANKE GUARD SHIELDS TRANS DEP	07/31/18	265352	199.95-

DICK'S SPORTING GOODS

Sum							199.95-
00009 DIXIE COMMUNITY UTILITY	SEWER BILLIN	00181555	17001513	SEWER BILLING 6/18	07/31/18	265353	403.50-

DIXIE COMMUNITY UTILITY

Sum							403.50-
00009 DOLEAC ELECTRIC CO INC	WP2-5-X1	00181098	17001455	GENERATOR REPR PLT#2 WELL#5	07/31/18	265354	784.65-

DOLEAC ELECTRIC CO INC

Sum							784.65-
00009 EATON, ALVIN K (PETTY CA	PETTY CASH 6	00181511	17001501	PETTY CASH 6/18 W&SO&M	07/31/18	265357	67.50-

EATON, ALVIN K (PETTY CA

Sum							67.50-
00009 EQUIPMENT INC	165501566(A)	00170743	17001441	REPRS U#20056 TRANS DEPT	07/31/18	265364	367.77-
00009 EQUIPMENT INC	165501566(B)	00179109	17001442	ADDL AMT DUE PO#170743	07/31/18	265364	49.50-

EQUIPMENT INC

Sum							417.27-
00009 FASTENAL COMPANY	MSHAT210411	00181100	17001444	AIR COMPRESSOR PTS PLT#2	07/31/18	265366	67.08-

FASTENAL COMPANY

Sum							67.08-
00009 GILLILANDS ELECTRONICS S	67115	00181455	17001489	MOVE DISPATCH RADIO WTR OFFC	07/31/18	265376	542.00-

GILLILANDS ELECTRONICS S

Sum							542.00-
00009 HATTIESBURG HYDRAULICS I	75172	00181452	17001497	LABOR CHARGE U#13176 SEWER	07/31/18	265390	140.00-

HATTIESBURG HYDRAULICS I

Sum							140.00-
00009 HAVARD PEST CONTROL INC	1308040	02018733	17001507	QTRLY SERV WATER OFFICE	07/31/18	265394	45.00-
00009 HAVARD PEST CONTROL INC	1308057	02018733	17001508	QTRLY SERV WTR PLT-LOWER	07/31/18	265394	48.00-
00009 HAVARD PEST CONTROL INC	1308058	02018733	17001509	QTRLY SERV WTR PLT-UPPER	07/31/18	265394	50.00-
00009 HAVARD PEST CONTROL INC	1308059	02018733	17001510	QTRLY SERV WTR PLT-JAMES	07/31/18	265394	50.00-
00009 HAVARD PEST CONTROL INC	1308060	02018733	17001511	QTRLY SERV BURKETT STA	07/31/18	265394	40.00-
00009 HAVARD PEST CONTROL INC	1308061	02018733	17001512	QTRLY SERV E LAUREL STA	07/31/18	265394	40.00-

HAVARD PEST CONTROL INC

Sum							273.00-
00009 IRBY, STUART C CO	S010825294.0	00181142	17001480	PUMP PTS BURKETT LIFT STA	07/31/18	265411	399.32-
00009 IRBY, STUART C CO	S010835702.0	00181143	17001481	PUMP PTS 63RD LIFT STA	07/31/18	265411	1,579.50-
00009 IRBY, STUART C CO	S010822608.0	00180802	17001482	ELEC SUPP CANAL PLACE STA	07/31/18	265411	600.78-

IRBY, STUART C CO

Sum							2,579.60-
00009 J M H GRAPHICS	14206	00180200	17001462	POLO SHIRTS WTR/SWR DIRECTOR	07/31/18	265412	149.22-

J M H GRAPHICS							
Sum							149.22-
00009 L & A CONTRACTING CO	483-112	00181239	17001461	AERATOR MNT 7/2-15 LAGOONS	07/31/18	265421	31,841.48-
L & A CONTRACTING CO							
Sum							31,841.48-
00009 MOLLY MAID	SERV 6/18 WT	00181368	17001471	SERV 6/18 WTR BILLING	07/31/18	265438	500.00-
00009 MOLLY MAID	SERV 7/18 WT	00181369	17001472	SERV 7/18 WTR BILLING	07/31/18	265438	500.00-
MOLLY MAID							
Sum							1,000.00-
00009 MORGAN, C J INC	2018017	00181273	17001458	WATER REPRS ENDING 5/2/18	07/31/18	265439	110,129.46-
00009 MORGAN, C J INC	2018021	00181273	17001459	WTR REPRS 11/17/17-3/12/18	07/31/18	265439	213,961.23-
MORGAN, C J INC							
Sum							324,090.69-
00009 MS POWER COMPANY	7/18 W&SO&M	00201820	17001491	MNTHLY ELEC-W&SO&M	07/31/18	265444	84,868.23-
MS POWER COMPANY							
Sum							84,868.23-
00009 PEARL RIVER VALLEY EPA (	7/18 W&SO&M	00201820	17001494	MNTHLY 7/18 PUBLIC SERVICES	07/31/18	265459	8,894.06-
PEARL RIVER VALLEY EPA (							
Sum							8,894.06-
00009 PINE BELT INDUSTRIAL SUP	4156831-01	00174972	17001519	BELTS GREEN HUT LIFT STA	07/31/18	265460	106.44-
PINE BELT INDUSTRIAL SUP							
Sum							106.44-
00009 RAWLS SPRINGS UTILITY DI	SEWER BILLIN	00181556	17001514	SEWER BILLING 7/18	07/31/18	265473	194.00-
RAWLS SPRINGS UTILITY DI							
Sum							194.00-
00009 REGIONS CARDHOLDER SERVI	7079 6/29/18	00180316	17001490	OFFICE FURNITURE WTR BILLING	07/31/18	265476	220.94-
REGIONS CARDHOLDER SERVI							
Sum							220.94-
00009 RICOH CORP	5053761300 W	00181162	17001435	PRODUCTION PRINTER CHARGES	07/31/18	265477	110.46-
RICOH CORP							
Sum							110.46-
00009 RJM MCQUEEN CONTRACTING	1509	00178716	17001446	TOPSOIL/CLAY GRAVEL SEWER	07/31/18	265480	3,080.00-
RJM MCQUEEN CONTRACTING							
Sum							3,080.00-
00009 SIGNS FIRST	H-58478	00172308	17001478	LETTERING 14 SEWER UNITS	07/31/18	265489	602.28-
SIGNS FIRST							
Sum							602.28-
00009 SOLAR SUPPLY INC	3405480	00181295	17001502	A/C REPR WTR BILLING OFFICE	07/31/18	265491	100.50-
SOLAR SUPPLY INC							
Sum							100.50-

00009 SOUTHERN PINE ELECTRIC P	7/18 W&SO&M	00201816	17001483	MNTHLY 7/18 PUBLIC SERVICES	07/31/18	265495	1,650.81-
SOUTHERN PINE ELECTRIC P							
Sum							1,650.81-
00009 SOUTHERN TIRE MART #9 (M	9032475	00180570	17001464	TIRES U#20446 TRANS	07/31/18	265496	290.16-
00009 SOUTHERN TIRE MART #9 (M	9033367	00181354	17001473	TRAILER TIRE U#18556 TRANS	07/31/18	265496	108.47-
SOUTHERN TIRE MART #9 (M							
Sum							398.63-
00009 SPIRE ENERGY	7/18 W&SO&M	00201820	17001495	MNTHLY GAS-W&SO&M	07/31/18	265501	47.19-
SPIRE ENERGY							
Sum							47.19-
00009 STANDARD OFFICE SUPPLY C	0078249-001	00181119	17001500	OFFICE SUPP WTR BILLING	07/31/18	265502	187.63-
STANDARD OFFICE SUPPLY C							
Sum							187.63-
00009 TOP NOTCH EMBROIDERY	357	00179909	17001517	POLOS/JACKETS VARI EMP SEWER	07/31/18	265511	688.79-
TOP NOTCH EMBROIDERY							
Sum							688.79-
Sum							611,433.54-

CITY OF HATTIESBURG
DOCKET OF CLAIMS
PERIOD ENDING JULY 31, 2018

Date - 07/27/18

Vendor	Invoice Number	Purchase Order	Claims Number	Item Description	Check Date	Check No.	Check Amount
WATER & SEWER FUND							
00011 ANDREWS, DARRIEL	METER DEP RF	02018742	17000786	METER DEP RFD	07/31/18	265297	24.40-
ANDREWS, DARRIEL							
Sum							24.40-
00011 BORGANELLI, MARCY S	WTR OVRPMT R	02018717	17000771	WTR OVRPMT RFD	07/31/18	265317	24.40-
BORGANELLI, MARCY S							
Sum							24.40-
00011 BOWLES, TRACY K	WTR OVRPMT R	02018717	17000772	WTR OVRPMT RFD	07/31/18	265318	178.74-
BOWLES, TRACY K							
Sum							178.74-
00011 CLARK, WILLIE E III	METER DEP RF	02018742	17000774	METER DEP RFD	07/31/18	265337	40.00-
CLARK, WILLIE E III							
Sum							40.00-
00011 HALL, STEPHANIE	METER DEP RF	02018742	17000780	METER DEP RFD	07/31/18	265386	21.40-
HALL, STEPHANIE							
Sum							21.40-
00011 HARPER, BRIEANA	METER DEP RF	02018742	17000779	METER DEP RFD	07/31/18	265387	41.40-
HARPER, BRIEANA							
Sum							41.40-
00011 HARPER, BRITTANY	WTR OVRPMT R	02018741	17000773	WTR OVRPMT RFD	07/31/18	265388	273.28-
00011 HARPER, BRITTANY	METER DEP RF	02018742	17000784	METER DEP RFD	07/31/18	265388	75.00-
HARPER, BRITTANY							
Sum							348.28-
00011 MCCRARY, ROBERT (2)	WTR OVRPMT R	02018717	17000770	WTR OVRPMT RFD	07/31/18	265428	75.00-
MCCRARY, ROBERT (2)							
Sum							75.00-
00011 NEWSON, CHENORA N	METER DEP RF	02018742	17000781	METER DEP RFD	07/31/18	265454	7.80-
NEWSON, CHENORA N							
Sum							7.80-
00011 PORTER, BENJAMIN	METER DEP RF	02018742	17000782	METER DEP RFD	07/31/18	265468	24.40-
PORTER, BENJAMIN							
Sum							24.40-
00011 RIGNEY, KELLY	METER DEP RF	02018742	17000777	METER DEP RFD	07/31/18	265478	24.40-
RIGNEY, KELLY							
Sum							24.40-

00011 ROY AND FAYE RESTORATION	METER DEP RF 02018742 17000785 METER DEP RFD	07/31/18	265486	24.40-
ROY AND FAYE RESTORATION				
Sum				24.40-
00011 TATE, KENNETH L	METER DEP RF 02018742 17000775 METER DEP RFD	07/31/18	265505	24.40-
TATE, KENNETH L				
Sum				24.40-
00011 TESH, TIMOTHY	METER DEP RF 02018742 17000778 METER DEP RFD	07/31/18	265508	24.40-
TESH, TIMOTHY				
Sum				24.40-
00011 TOLBERT, SHELBY	METER DEP RF 02018742 17000787 METER DEP RFD	07/31/18	265510	24.40-
TOLBERT, SHELBY				
Sum				24.40-
00011 WASHINGTON, TERRICA EVIT	METER DEP RF 02018742 17000776 METER DEP RFD	07/31/18	265526	75.00-
WASHINGTON, TERRICA EVIT				
Sum				75.00-
00011 YOUNG, DANIEL	METER DEP RF 02018742 17000783 METER DEP RFD	07/31/18	265531	24.40-
YOUNG, DANIEL				
Sum				24.40-
Sum				1,007.22-

CITY OF HATTIESBURG
DOCKET OF CLAIMS
PERIOD ENDING JULY 31, 2018

Date - 07/27/18

Vendor	Invoice Number	Purchase Order	Claims Number	Item Description	Check Date	Check No.	Check Amount
POLICE FORFEITURES FUND							
00019 GALL'S LLC	009986700 TA	00179806	17000067	TAX CHARGE	07/31/18	265373	76.43-
00019 GALL'S LLC	010147346 TA	00179806	17000068	TAX CHARGE	07/31/18	265373	169.21-
GALL'S LLC							
Sum							245.64-
00019 REGIONS CARDHOLDER SERVI	7079 6/29/18	00180089	17000065	SNACKS FOR SUMMER CAMP	07/31/18	265476	502.17-
00019 REGIONS CARDHOLDER SERVI	7079 6/29/18	00180619	17000066	SMACKS FOR SUMMER CAMP	07/31/18	265476	1,015.56-
REGIONS CARDHOLDER SERVI							
Sum							1,517.73-
00019 TOP NOTCH EMBROIDERY	354	00180889	17000069	T-SHIRTS PAL SUMMER CAMP	07/31/18	265511	512.50-
TOP NOTCH EMBROIDERY							
Sum							512.50-
00019 TOSHIBA BUSINESS SOLUTIO	14657629	00181249	17000064	COPIER 7/18 COMM RELATIONS	07/31/18	265512	374.48-
TOSHIBA BUSINESS SOLUTIO							
Sum							374.48-
Sum							2,650.35-

CITY OF HATTIESBURG
DOCKET OF CLAIMS
PERIOD ENDING JULY 31, 2018

Date - 07/27/18

Vendor	Invoice Number	Purchase Order	Claims Number	Item Description	Check Date	Check No.	Check Amount
2003 TIF B&I-CHAUVET SQUARE							
00022 TRUSTMARK NATIONAL BANK/	6261 P&I '03	02018727	17000004	DEBT PAY '03 CHAUVET SQUARE	07/20/18	112862	95,337.50-
TRUSTMARK NATIONAL BANK/							
Sum							95,337.50-
Sum							95,337.50-

CITY OF HATTIESBURG
DOCKET OF CLAIMS
PERIOD ENDING JULY 31, 2018

Date - 07/27/18

Vendor	Invoice Number	Purchase Order	Claims Number	Item Description	Check Date	Check No.	Check Amount
TAX COLLECTOR'S FUND							
00027 H'BURG PUBLIC SCHOOLS	7/18 MILLAGE	02018732	17000106	7/18 MILLAGE	07/24/18	311954	364,619.49-
00027 H'BURG PUBLIC SCHOOLS	7/18 MILLAGE	02018732	17000107	7/18 MILLAGE	07/24/18	311955	47,234.08-
H'BURG PUBLIC SCHOOLS							
Sum							411,853.57-
Sum							411,853.57-

CITY OF HATTIESBURG
DOCKET OF CLAIMS
PERIOD ENDING JULY 31, 2018

Date - 07/27/18

Vendor	Invoice Number	Purchase Order	Claims Number	Item Description	Check Date	Check No.	Check Amount
AIRPORT IMPROVEMENT FUND							
00039 ARE CONSULTANTS INC	180508D	00181458	17000040	SRV 7/8-25 AIRPT TAXIWAY EXTN	07/31/18	265299	18,641.67-
ARE CONSULTANTS INC							
Sum							18,641.67-
Sum							18,641.67-

CITY OF HATTIESBURG
DOCKET OF CLAIMS
PERIOD ENDING JULY 31, 2018

Date - 07/27/18

Vendor	Invoice Number	Purchase Order	Claims Number	Item Description	Check Date	Check No.	Check Amount
MUNICIPAL ROAD & BRIDGE							
00072 COLLINS & NULL APPRAISAL	3324	00181487	17000205	APPRAISAL HERRING MAMIE ST	07/31/18	265344	1,250.00-
00072 COLLINS & NULL APPRAISAL	3323	00181487	17000206	APPRAISAL GARGIS MAMIE ST	07/31/18	265344	1,250.00-
COLLINS & NULL APPRAISAL							
Sum							2,500.00-
00072 NEEL-SCHAFFER INC	1052909 EST#	00181460	17000203	SRV 6/18 LLT DEPOT/CHAIN PK	07/31/18	265451	7,634.43-
00072 NEEL-SCHAFFER INC	1052907 EST#	00181459	17000204	SRV 6/18 4TH ST IMPRVMT PH II	07/31/18	265451	15,197.52-
NEEL-SCHAFFER INC							
Sum							22,831.95-
00072 STEWART, JOHN B REAL ES	2018-1 H49/F	00181213	17000202	APPRAISAL H49/F GEN/ARLINGTON	07/31/18	265504	500.00-
00072 STEWART, JOHN B REAL ES	HATTIESBURG	00181463	17000207	APPRAISAL STAN BLACK PROPERTY	07/31/18	265504	1,000.00-
STEWART, JOHN B REAL ES							
Sum							1,500.00-
Sum							26,831.95-

CITY OF HATTIESBURG
DOCKET OF CLAIMS
PERIOD ENDING JULY 31, 2018

Date - 07/27/18

Vendor	Invoice Number	Purchase Order	Claims Number	Item Description	Check Date	Check No.	Check Amount
MASS TRANSIT FUND							
00073 ALLIANCE BUS GROUP INC	118469	00179342	17000413	2018 FORD ADA VAN U#20988	07/31/18	265296	49,756.00-
ALLIANCE BUS GROUP INC							
Sum							49,756.00-
00073 AT&T MOBILITY	287273578351	00181116	17000402	WIRELESS SRV 6/18 M TRANSIT	07/31/18	265307	120.24-
00073 AT&T MOBILITY	287273861504	00181118	17000403	GPS TRACKING 6/18 MASS TRANS	07/31/18	265307	100.00-
AT&T MOBILITY							
Sum							220.24-
00073 CINTAS CORPORATION #J66	J66589917	00181184	17000406	UNIFORMS 6/06 MECH/DRIVERS	07/31/18	265333	99.69-
00073 CINTAS CORPORATION #J66	J66591138	00181184	17000407	UNIFORMS 6/13 MECH/DRIVERS	07/31/18	265333	99.69-
00073 CINTAS CORPORATION #J66	J66592348	00181184	17000408	UNIFORMS 6/20 MECH/DRIVERS	07/31/18	265333	99.69-
00073 CINTAS CORPORATION #J66	J66593549	00181184	17000409	UNIFORMS 6/27 MECH/DRIVERS	07/31/18	265333	99.69-
CINTAS CORPORATION #J66							
Sum							398.76-
00073 CITY OF HATTIESBURG FUND	TRF 2ND 7/18	02018723	17000411	TRF 2ND 7/18 PAYROLL	07/18/18	112860	35,895.35-
CITY OF HATTIESBURG FUND							
Sum							35,895.35-
00073 CLARION LEDGER (ADVERTIS	C19347 63860	00181240	17000412	ADS/NOTICES TRANSIT VEHICLES	07/31/18	265335	17.24-
CLARION LEDGER (ADVERTIS							
Sum							17.24-
00073 EATON, ALVIN K (PETTY CA	PETTY CASH 6	00181510	17000422	PETTY CASH 6/18 MASS TRANSIT	07/31/18	265355	27.69-
EATON, ALVIN K (PETTY CA							
Sum							27.69-
00073 FASTENAL COMPANY	MSHAT210448	00180787	17000404	WASHERS FOR BUS STOP SIGNS	07/31/18	265366	64.00-
FASTENAL COMPANY							
Sum							64.00-
00073 HOTSY OF MS	7397	00180414	17000418	DEGREASER SHELTERS/SHOP	07/31/18	265400	939.85-
HOTSY OF MS							
Sum							939.85-
00073 JOHNNY'S WRECKER SERVICE	36036	00181536	17000421	TOWING U#16234 BUS	07/31/18	265413	350.00-
JOHNNY'S WRECKER SERVICE							
Sum							350.00-
00073 MOLLY MAID	SERV 6/18 MA	00181368	17000414	SERV 6/18 MASS TRANSIT	07/31/18	265438	300.00-
00073 MOLLY MAID	SERV 7/18 MA	00181369	17000415	SERV 7/18 MASS TRANSIT	07/31/18	265438	300.00-
MOLLY MAID							
Sum							600.00-

00073 MS POWER COMPANY	7/18 M TRANS	00201820	17000419	MNTHLY ELEC-MASS TRANSIT	07/31/18	265444	952.53-
MS POWER COMPANY							
Sum							952.53-
00073 MS STATE/TAX COMM/TAX EX	PO#181427 7/	00181427	17000417	TAG U#20988 FORD VAN	07/31/18	265445	12.00-
MS STATE/TAX COMM/TAX EX							
Sum							12.00-
00073 NAPA AUTO PARTS	578911	00181077	17000405	REPR PTS U#16761 BUS	07/31/18	265450	654.84-
NAPA AUTO PARTS							
Sum							654.84-
00073 VERIZON WIRELESS	9810621188	00181374	17000416	GPS SERV 6/11-7/10/18 BUSES	07/31/18	265523	142.55-
VERIZON WIRELESS							
Sum							142.55-
Sum							90,031.05-

CITY OF HATTIESBURG
DOCKET OF CLAIMS
PERIOD ENDING JULY 31, 2018

Date - 07/27/18

Vendor	Invoice Number	Purchase Order	Claims Number	Item Description	Check Date	Check No.	Check Amount
WATER&SEWER CONSTRUCTION FUND							
00075 CLEARWATER CONSULTANTS I	12.11802	00181299	17000147	MONITORING 3-6/18 SOUTH LAGN	07/31/18	265340	18,150.72-
00075 CLEARWATER CONSULTANTS I	12.11803	00181299	17000148	AERATOR LOCATION 12/17-6/18	07/31/18	265340	6,181.00-
00075 CLEARWATER CONSULTANTS I	12.21801	00181299	17000149	SUPPORT/ASSISTANCE 12/17-6/18	07/31/18	265340	1,732.50-
CLEARWATER CONSULTANTS I							
Sum							26,064.22-
00075 LAMAR PARK WATER & SEWER	071718	00181477	17000151	SEWER FEES 1/18-6/18	07/31/18	265422	4,076.00-
LAMAR PARK WATER & SEWER							
Sum							4,076.00-
00075 MS POWER COMPANY	18430-29051	00181473	17000152	POWER E HARDY/E LAUREL STA	07/31/18	265444	24,720.64-
MS POWER COMPANY							
Sum							24,720.64-
00075 PITTMAN LAW FIRM (TRUST)	COMSWIP SEWE	00181476	17000150	DISBURSE PYMT FULL EASEMENTS	07/31/18	265465	16,070.00-
PITTMAN LAW FIRM (TRUST)							
Sum							16,070.00-
Sum							70,930.86-

CITY OF HATTIESBURG
DOCKET OF CLAIMS
PERIOD ENDING JULY 31, 2018

Date - 07/27/18

Vendor	Invoice Number	Purchase Order	Claims Number	Item Description	Check Date	Check No.	Check Amount
COMMUNITY CENTERS' FUND							
00077 APOSTLES DOCTRINE MINIST	SHERRILL CEN	02018730	17000444	DAMAGE DEPOSIT REFUND	07/31/18	265298	100.00-
APOSTLES DOCTRINE MINIST							
Sum							100.00-
00077 AT&T MOBILITY	287273578351	00181116	17000427	WIRELESS SRV 6/18 COMM CNTRS	07/31/18	265307	61.62-
AT&T MOBILITY							
Sum							61.62-
00077 BROWN, BELYNDA (REFUND)	CE ROY CENTE	02018730	17000440	DAMAGE DEPOSIT REFUND	07/31/18	265322	100.00-
BROWN, BELYNDA (REFUND)							
Sum							100.00-
00077 BUCKOS CLEANERS	49824	00181387	17000434	CLEAN TABLECLOTHS CITY EVENTS	07/31/18	265323	35.00-
BUCKOS CLEANERS							
Sum							35.00-
00077 CITY OF HATTIESBURG FUND	TRF 2ND 7/18	02018723	17000431	TRF 2ND 7/18 PAYROLL	07/18/18	311948	21,390.92-
CITY OF HATTIESBURG FUND							
Sum							21,390.92-
00077 EATON, ALVIN K (PETTY CA	PETTY CASH 6	00181510	17000455	PETTY CASH 6/18 COMM CENTERS	07/31/18	265356	18.71-
EATON, ALVIN K (PETTY CA							
Sum							18.71-
00077 ECONOMY SUPPLY CO	298794	00181160	17000429	COMMERCIAL LOCK MCNAIR CNTR	07/31/18	265360	69.50-
00077 ECONOMY SUPPLY CO	299390	00180956	17000437	CEILING TILES COMM CENTERS	07/31/18	265360	89.00-
ECONOMY SUPPLY CO							
Sum							158.50-
00077 GAINES, DORIS T (REFUNDS	CE ROY CENTE	02018730	17000446	DAMAGE DEPOSIT REFUND	07/31/18	265372	100.00-
GAINES, DORIS T (REFUNDS							
Sum							100.00-
00077 GAY, KESHELIA (REFUND)	SIGLER CENTE	02018730	17000445	DAMAGE DEPOSIT REFUND	07/31/18	265375	100.00-
GAY, KESHELIA (REFUND)							
Sum							100.00-
00077 GROVER BROS RESTAURANT &	220000003748	00181326	17000432	FRYER GREASE NOZZLE SHERRILL	07/31/18	265381	59.99-
00077 GROVER BROS RESTAURANT &	220000003777	00181242	17000454	ICE MACHINE CE ROY CENTER	07/31/18	265381	2,704.00-
GROVER BROS RESTAURANT &							
Sum							2,763.99-
00077 HAVARD PEST CONTROL INC	1308050	02018733	17000448	QTRLY SERV CE ROY CENTER	07/31/18	265394	48.00-
00077 HAVARD PEST CONTROL INC	1308043	02018733	17000449	QTRLY SERV SHERRILL CENTER	07/31/18	265394	115.00-
00077 HAVARD PEST CONTROL INC	1308045	02018733	17000450	QTRLY SERV SIGLER CENTER	07/31/18	265394	48.00-

00077	HAVARD PEST CONTROL INC	1308046	02018733	17000451	QTRLY SERV MCNAIR CENTER	07/31/18	265394	48.00-
00077	HAVARD PEST CONTROL INC	1308049	02018733	17000452	QTRLY SERV CULTURAL CENTER	07/31/18	265394	48.00-
HAVARD PEST CONTROL INC								
Sum								307.00-
00077	HOWZE, SHAONNON (REFUND)	CULTURAL CEN	02018730	17000442	DAMAGE DEPOSIT REFUND	07/31/18	265402	250.00-
HOWZE, SHAONNON (REFUND)								
Sum								250.00-
00077	HUGHES SUPPLY	S153380919.0	00181102	17000433	PLUMB SUPP MCNAIR WTR LEAK	07/31/18	265404	44.73-
00077	HUGHES SUPPLY	S153307917.0	00180883	17000453	A/C REPR PTS MCNAIR CENTER	07/31/18	265404	38.88-
HUGHES SUPPLY								
Sum								83.61-
00077	MS POWER COMPANY	7/18 COMM CN	00201820	17000439	MNTHLY ELEC-COMM CENTERS	07/31/18	265444	4,465.44-
MS POWER COMPANY								
Sum								4,465.44-
00077	N & H ELECTRONIC DISTRIB	185832	00181290	17000435	SENSOR BATTERIES SHERRILL AUD	07/31/18	265449	63.60-
N & H ELECTRONIC DISTRIB								
Sum								63.60-
00077	OFFICE DEPOT INC	2204667681	00180985	17000428	CORDLESS PHONE CULTURAL CNTR	07/31/18	265455	75.99-
OFFICE DEPOT INC								
Sum								75.99-
00077	PINEBELT MENTAL HEALTHCA	CULTURAL CEN	02018730	17000443	DAMAGE DEPOSIT REFUND	07/31/18	265462	150.00-
PINEBELT MENTAL HEALTHCA								
Sum								150.00-
00077	REGIONS CARDHOLDER SERVI	7079 6/29/18	00179919	17000436	CORDLESS BLOWER CULTURAL CNTR	07/31/18	265476	79.97-
REGIONS CARDHOLDER SERVI								
Sum								79.97-
00077	SOLAR SUPPLY INC	3405491	00180981	17000438	A/C REPR SUPP MCNAIR CENTER	07/31/18	265491	1,395.77-
SOLAR SUPPLY INC								
Sum								1,395.77-
00077	SPIRE ENERGY	7/18 COMM CN	00201820	17000447	MNTHLY GAS-COMM CENTERS	07/31/18	265501	55.55-
SPIRE ENERGY								
Sum								55.55-
00077	TAYLOR, WILLIE (REFUND)	SHERRILL CEN	02018730	17000441	DAMAGE DEPOSIT REFUND	07/31/18	265507	100.00-
TAYLOR, WILLIE (REFUND)								
Sum								100.00-
Sum								31,855.67-

CITY OF HATTIESBURG
DOCKET OF CLAIMS
PERIOD ENDING JULY 31, 2018

Date - 07/27/18

Vendor	Invoice Number	Purchase Order	Claims Number	Item Description	Check Date	Check No.	Check Amount
COMMUNITY DEVELOP. BLOCK GRANT							
00082 AT&T MOBILITY	287273578351	00181116	17000109	WIRELESS SRV 6/18 CDBG	07/31/18	265307	61.72-
AT&T MOBILITY							
Sum							61.72-
00082 CITY OF HATTIESBURG FUND	TRF 2ND 7/18	02018723	17000111	TRF 2ND 7/18 PAYROLL	07/18/18	311949	5,605.98-
CITY OF HATTIESBURG FUND							
Sum							5,605.98-
00082 HOLLIMON CONSTRUCTION	07/17/18	00181370	17000115	107 MONTAGUE, DR#3, CO#1	07/23/18	311952	12,200.00-
HOLLIMON CONSTRUCTION							
Sum							12,200.00-
00082 NORRIS CONSTRUCTION	07/17/18	00180291	17000114	543 MILLER ST, DRAW #1	07/23/18	311951	17,015.00-
NORRIS CONSTRUCTION							
Sum							17,015.00-
00082 OFFICE PRODUCTS PLUS	836146-0	00181137	17000116	MESSAGE BOARD HOUSING COORD	07/31/18	265457	74.69-
00082 OFFICE PRODUCTS PLUS	836146-1	00181137	17000117	SURGE PROTECTOR HOUSING COORD	07/31/18	265457	26.99-
OFFICE PRODUCTS PLUS							
Sum							101.68-
00082 RJ YOUNG COMPANY	INV2551865	00181310	17000113	COPIER 3/28-6/27 CDBG	07/31/18	265479	271.06-
RJ YOUNG COMPANY							
Sum							271.06-
00082 SPEEDY PRINTING & SIGNS	25500	00181146	17000112	HOUSING REHAB PROGRAM SIGNS	07/31/18	265500	190.00-
SPEEDY PRINTING & SIGNS							
Sum							190.00-
00082 STAPLES	3383817135	00181136	17000118	OFFICE SUPP HOUSING COORD	07/31/18	265503	284.65-
00082 STAPLES	3383817136	00181136	17000119	OFFICE SUPP HOUSING COORD	07/31/18	265503	60.41-
STAPLES							
Sum							345.06-
Sum							35,790.50-
Grand Total Level							
Sum							3,494,662.48-